JAN 9 1980 Item 950-D T 1.11/3:14/1
contin

Customs Bulletin

Regulations, Rulings, Decisions, and Notices concerning Customs and related matters

and Decisions

of the United States Court of Customs and Patent Appeals and the United States Customs Court

307-462
350
9247

Vol. 14 JANUARY 2, 1980 No. 1

This issue contains

T.D. 80-1 thru 80-5
C.S.D. 79-476 thru 79-509
General Notice
C.R.D. 79-16
Reap. abstracts R 79-251 thru R 79-257
International Trade Commission Notices

THE DEPARTMENT OF THE TREASURY
U.S. Customs Service

NOTICE

The abstracts, rulings, and notices which are issued weekly by the U.S. Customs Service are subject to correction for typographical or other printing errors. Users may notify the U.S. Customs Service, Logistics Management Division, Washington, D.C. 20229, of any such errors in order that corrections may be made before the bound volumes are published.

For sale by the Superintendent of Documents, U.S. Government Printing Office, Washington, D.C. 20402. Price: $1.30 (single copy domestic); $1.65 (single copy foreign). Subscription price: $65.00 a year domestic; $81.25 a year foreign.

U.S. Customs Service

Treasury Decision

(T.D. 80-1)

Bonds

Approval and discontinuance of consolidated aircraft bonds (air carrier blanket bonds) Customs Form 7605

The following consolidated aircraft bonds have been approved or discontinued as shown below. The symbol "D" indicates that the bond previously outstanding has been discontinued on the month, day, and year represented by the figures which follow. "PB" refers to a previous bond, dated as represented by figures in parentheses immediately following, which has been discontinued. If the previous bond was in the name of a different company or if the surety was different, the information is shown in a footnote at the end of the list.

Dated: December 12, 1979.

Name of principal and surety	Date term commences	Date of approval	Filed with area director of Customs; amount
Compagnie Nationale Air France (known as Air France), 1350 Avenue of the Americas, New York, NY; Sentry Insurance, A Mutual Co. (PB 12/1/66) D 12/1/79 [1]	Oct. 11, 1979	Dec. 1, 1979	New York Seaport; $100,000.

[1] Surety is Federal Ins. Co.

The foregoing principal has been designated as a carrier of bonded merchandise.

BON-3-01

DONALD W. LEWIS,
Director, Office of Regulations and Rulings.

(T.D. 80-2)

TITLE 19—CUSTOMS DUTIES

CHAPTER 1—U.S. CUSTOMS SERVICE, DEPARTMENT OF THE TREASURY

PART 159—LIQUIDATION OF DUTIES

Dextrines and Soluble or Chemically Treated Starches Derived From Potato Starch From the European Community

Final countervailing duty determination

AGENCY: U.S. Customs Service, Treasury Department.

ACTION: Final countervailing duty determination.

SUMMARY: This notice is to inform the public that a countervailing duty investigation has resulted in a final determination that the European Community and the Government of the Netherlands have given benefits which constitute bounties or grants within the meaning of the countervailing duty law on the manufacture, production, or exportation of dextrines and soluble or chemically treated starches derived from potato starch. The deposit of countervailing duties in the amount of these benefits will be required at the time of entry in addition to duties normally collected on dutiable shipments of this merchandise.

EFFECTIVE DATE: (Date of publication in the Federal Register.)

FOR FURTHER INFORMATION CONTACT: Stephen Nyschot, Trade Analysis Division, U.S. Customs Service, 1301 Constitution Avenue NW., Washington, D.C. 20229; telephone 202-566-5492.

SUPPLEMENTARY INFORMATION: On June 26, 1979, a notice of "Preliminary Countervailing Duty Determination" was published in the Federal Register (44 F.R. 37363). The notice stated that it had been preliminarily determined that benefits bestowed by the European Community (EC) and the Government of the Netherlands upon the manufacture, production, or exportation of dextrines and soluble or chemically treated starches derived from potato starch constitute the payment of bounties or grants within the meaning of section 303, Tariff Act of 1930, as amended (19 U.S.C. 1303) (referred to as the act).

The EC comprises Belgium, Denmark, the Federal Republic of Germany, France, Ireland, Italy, Luxembourg, the Netherlands, and the United Kingdom. Imports covered by this investigation are classified under item 493.30, Tariff Schedules of the United States Anno-

tated (TSUSA), and include only those dextrines and soluble or chemically treated starches derived from potato starch.

The preliminary determination stated that bounties or grants are paid by the EC in the form of "production refund payments," which are made to processors who establish contracts in accordance with the minimum price set for potatoes, and "premium payments," a further unconditional payment made to processors.

On the basis of additional information, it has been determined that in addition to the payments mentioned above, the EC gives "export restitution payments" to exporters of the subject merchandise. These payments, made based on an established formula for each unit of eligible merchandise exported from the EC, also constitute a bounty or grant because they simply confer a direct benefit on the exported merchandise.

The total bounty or grant associated with the subject merchandise is equal to the sum of the various payments made through all stages of the production process from potato, to potato starch, to dextrine and soluble or chemically treated starches derived from potato starch. The net value of these payments, in terms of the U.S. import value on a Customs valuation basis, is equal to 34.4 percent ad valorem.

The preliminary determination also stated that the Government of the Netherlands provides financial assistance to the sole potato starch producer in that country. The assistance is given under a general government program for regional economic development and not for the purposes alleged by the petitioner. However, these payments are in the form of a grant which confers a direct benefit on the production of potato starch and, therefore, constitute a bounty or grant to the Dutch manufacturer. The average value of this bounty or grant has been calculated to be 1.6 percent ad valorem. This figure represents the average annual benefit bestowed on the Dutch manufacturer in the last 3 years divided by the value of firm's production in the most recent year for which data is available.

Under traditional Treasury practice, whether a domestic program providing a benefit had a trade-distorting effect would be examined in determining whether a bounty or grant had been paid or bestowed. This would be determined by the size of the ad valorem benefit found and, except where that benefit was of significant size, the proportion of production of the subject merchandise that was exported. In the instant case, analysis of proportion exported is unnecessary in view of the magnitude of the benefits. On November 29, 1979, the Court of Customs and Patent Appeals overturned Treasury's administrative practice. *ASG Industries* v. *United States*, C.A.D. 1237. If this holding remains in effect, Treasury could not, in any circumstance, consider the level of exportation in determining whether a bounty or grant

was paid or bestowed under the programs investigated. Thus, whatever standard is used, it is determined that a bounty or grant is provided in the instant case.

Accordingly, notice is hereby given that dextrines and soluble or chemically treated starches derived from potato starch which are imported directly or indirectly from the EC, if entered, or withdrawn from warehouse, for consumption on or after the date of publication of this notice in the Federal Register will be subject to the payment of countervailing duties equal to the net amount of any bounty or grant determined or estimated to have been paid or bestowed.

In accordance with section 303 of the act and until further notice, the net amount of the bounties or grants bestowed on the merchandise subject to this investigation has been ascertained and determined to be 34.4 percent ad valorem for imports of the subject merchandise from all countries of the EC other than the Netherlands (i.e., Belgium, Denmark, the Federal Republic of Germany, France, Ireland, Italy, Luxembourg, and the United Kingdom), and 36.0 percent ad valorem for imports of the subject merchandise from the Netherlands.

In order to allow Customs officials to distinguish the merchandise subject to this determination from similar merchandise not subject to it, those officials may take whatever administrative actions are necessary, such as, but not limited to, requiring manufacturer's certification of the material origin of shipments and/or a detailed invoice description of the merchandise.

Effective on or after the publication date of this notice, and until further notice, upon the entry, or withdrawal from warehouse, for consumption of such dextrines and soluble or chemically treated starches derived from potato starch, imported directly or indirectly from the EC, which benefit from these bounties or grants, there shall be collected, in addition to any other duties estimated or determined to be due, countervailing duties in the amount ascertained in accordance with the above declaration. To the extent that it can be established to the satisfaction of the Commissioner of Customs that imports of the subject merchandise from the EC are benefiting from a bounty or grant smaller than the amount which otherwise would be applicable under the above declaration, the smaller amount so established shall be assessed and collected.

Any merchandise subject to the terms of this order shall be deemed to have benefited from a bounty or grant if such bounty or grant has been or will be credited or bestowed, directly or indirectly, upon the manufacture, production, or exportation of dextrines and soluble or chemically treated starches derived from potato starch from the EC.

The table in section 159.47(f), Customs Regulations (19 CFR 159.47(f)), is amended by inserting after the last entry for "European

Community," the words "dextrines and soluble or chemically treated starches derived from potato starch" in the column headed "Commodity"; the number of this Treasury decision in the column headed "Treasury decision"; and the words "Bounty declared-rate," in the column headed "Action."

(R.S. 251, as amended, secs. 303, as amended, 624, 46 Stat. 687, as amended, 759 (19 U.S.C. 66, 1303, 1624).)

This final determination is published pursuant to section 303(a), Tariff Act of 1930, as amended (19 U.S.C. 1303(a)).

Pursuant to Reorganization Plan No. 26 of 1950 and Treasury Department Order No. 101-5, May 16, 1979, the provisions of Treasury Order No. 165, Revised, November 2, 1954, and section 159.47 of the Customs Regulations (19 CFR 159.47), insofar as they pertain to the issuance of a final countervailing duty determination by the Commissioner of Customs, are hereby waived.

Dated: December 13, 1979.

ROBERT H. MUNDHEIM,
General Counsel of the Treasury.

[Published in the Federal Register, Dec. 19, 1979 (44 F.R. 75135)]

(T.D. 80-3)

Notice of Recordation of Trade Name

XYLOGICS, INC.

On November 9, 1979, there was published in the Federal Register (44 F.R. 65229), a notice of application for the recordation under section 42 of the act of July 5, 1946, as amended (15 U.S.C. 1124), of the trade name Xylogics, Inc. The notice advised that prior to final action on the application, filed pursuant to section 133.12, Customs Regulations (19 CFR 133.12), consideration would be given to relevant data, views, or arguments submitted in opposition to the recordation and received not later than 30 days from the date of publication of the notice. No responses were received in opposition to the application.

The name "Xylogics, Inc." is hereby recorded as the trade name of Xylogics, Inc., a corporation organized under the laws of the State of Delaware located at 42 Third Avenue, Burlington, Mass. 01803, when applied to electronic, data-processing equipment, including central-processing units, memory devices, controllers, interfaces and tape drives, disc drives, terminals, and other peripheral input and output equipment, manufactured in England and the United

States. Zylogics International, Ltd., Lyton House, Mill Lane, Gerrards Cross, Bucks SL98AY, Great Britain, is authorized to use the trade name.

Dated: December 14, 1979.

HARVEY B. FOX,
Acting Director, Office of Regulations and Rulings.

[Published in the Federal Register, Dec. 9, 1979 (44 F.R. 65229)]

(T.D. 80-4)

Foreign Currencies—Daily Rates for Countries Not on Quarterly List

Rates of exchange based on rates certified to the Secretary of the Treasury by the Federal Reserve Bank of New York for the Brazil cruziero, Peoples Republic of China yuan, Hong Kong dollar, Iran rial, Philippines peso, Singapore dollar, Thailand baht (tical), and Venezuela bolivar

The Federal Reserve Bank of New York, pursuant to section 522(c), Tariff Act of 1930, as amended (31 U.S.C. 372(c)), has certified buying rates for the dates and foreign currencies shown below. The rates of exchange, based on these buying rates, are published for the information and use of Customs officers and others concerned pursuant to part 159, subpart C, Customs Regulations (19 CFR 159, subpart C).

Brazil cruziero:	
December 3–4, 1979	$0.0312
December 5–6, 1979	.0306
December 7, 1979	Not available
Peoples Republic of China yuan:	
December 3, 1979	$0.661288
December 4–5, 1979	.663922
December 6–7, 1979	.658675
Hong Kong dollar:	
December 3, 1979	$0.201126
December 4, 1979	.201086
December 5, 1979	.210207
December 6, 1979	.201086
December 7, 1979	.200965
Iran rial:	
December 3–7, 1979	Not available
Philippines peso:	
December 3–7, 1979	$0.1350

Singapore dollar:

December 3, 1979	$0.462642
December 4, 1979	.460405
December 5, 1979	.459876
December 6, 1979	.460087
December 7, 1979	.459664

Thailand baht (tical):

December 3–7, 1979	$0.0495

Venezuela bolivar:

December 3–7, 1979	$0.2329

(LIQ-3-TRODE)

Dated: December 19, 1979.

DANIEL D. SULLIVAN,
(For G. Scott Shreve, Acting
Director, Duty Assessment Division).

(T.D. 80-5)

Foreign Currencies—Variances From Quarterly Rate

Rates of exchange based upon rates certified to the Secretary of the Treasury by the Federal Reserve Bank of New York

The following rates of exchange are based upon rates certified to the Secretary of the Treasury by the Federal Reserve Bank of New York, pursuant to section 522(c), Tariff Act of 1930, as amended (31 U.S.C. 372(c)), and reflect variances of 5 per centum or more from the quarterly rate published in T.D. 79-264 for the following countries. Therefore, as to entries covering merchandise exported on the dates listed, whenever it is necessary for Customs purposes to convert such currency into currency of the United States, conversion shall be at the following rates:

Denmark krone:

December 5, 1979	$0.185185
December 6, 1979	.185185
December 7, 1979	.184758

Finland markka:

December 7, 1979	$0.307361

Japan yen:

December 3, 1979	$0.004018
December 4, 1979	.004040

307-462—79——2

December 5, 1979	: 004070
December 6, 1979	: 004105
December 7, 1979	: 004163

(LIQ-3-TRODE)

Dated: December 19, 1979.

DANIEL D. SULLIVAN
(For G. Scott Shreve, Acting
Director, Duty Assessment Division).

U.S. Customs Service

General Notices

Tariff Classification of Imported Cab Chassis

Extension of time for comments concerning the tariff classification of imported cab chassis

AGENCY: U.S. Customs Service, Department of the Treasury.

ACTION: Notice of extension of time for comments.

SUMMARY: This document extends the time for the submission of comments in response to Customs request published in the Federal Register on October 17, 1979, for comments regarding the application of the decision of the U.S. Court of Customs and Patent Appeals in *Daisy-Heddon, Div. Victor Comptometer Corp.* v. *United States*, C.A.D. 1228 (1979), to the tariff classification of imported cab chassis.

DATE: Comments must be received on or before January 31, 1980.

ADDRESS: Written comments (preferably in triplicate) should be addressed to the Commissioner of Customs, attention: Regulations and Research Division, U.S. Customs Service, 1301 Constitution Avenue NW., room 2335, Washington, D.C. 20229.

FOR FURTHER INFORMATION CONTACT: Thomas L. Lobred, Classification and Value Division, U.S. Customs Service, 1301 Constitution Avenue NW., Washington, D.C. 20229; 202-566-2938.

SUPPLEMENTARY INFORMATION:

BACKGROUND

On October 17, 1979, a general notice was published in the Federal Register (44 F.R. 59984) advising that Customs was reconsidering its practice of classifying imported cab chassis under the provision for bodies (including cabs) and chassis in item 692.20, Tariff Schedules of the United States (TSUS), in view of the decision of the U.S. Court of Customs and Patent Appeals in *Daisy-Heddon, Div. Victor Comptometer Corp.* v. *United States*, C.A.D. 1228 (1979). As part of this review, Customs requested comments concerning the application of *Daisy-Heddon* to the tariff classification of cab chassis.

Comments were to have been received on or before December 17, 1979, 60 days from the date of publication of the notice in the Federal Register. However, American industries have requested that Customs extend the time for submission of comments owing to the complexity of the issues involved and the intervention of the holiday season. Therefore, the time for submission of comments is extended to January 31, 1980.

Dated: December 13, 1979.

DONALD W. LEWIS,
Director, Office of Regulations and Rulings.

[Published in the Federal Register, Dec. 14, 1979 (44 F.R. 72699)]

Tariff Classification of Substantially Complete Articles

AGENCY: U.S. Customs Service, Department of the Treasury.

ACTION: General notice—request for public comments.

SUMMARY: Customs is soliciting public comments concerning the tariff classification of substantially complete articles as either unfinished articles or as parts of finished articles, in view of the decision of the U.S. Court of Customs and Patent Appeals in *Daisy-Heddon, Div. Victor Comptometer Corp.* v. *United States*, C.A.D. 1228 (1979). Comments are requested concerning the application of *Daisy-Heddon* to Customs tariff classification rulings regarding merchandise imported in substantially completed form.

DATE: Comments must be received on or before (90 days from the date of publication in the Federal Register).

ADDRESS: Written comments should be addressed to the Commissioner of Customs, attention: Regulations and Research Division, U.S. Customs Service, 1301 Constitution Avenue NW., room 2335, Washington, D.C. 20229.

FOR FURTHER INFORMATION CONTACT: Thomas L. Lobred, Classification and Value Division, U.S. Customs Service, 1301 Constitution Avenue NW., Washington, D.C. 20229; 202-566-2938.

SUPPLEMENTARY INFORMATION:

BACKGROUND

Customs published a general notice in the Federal Register on October 17, 1979 (44 F.R. 59984), requesting public comments by December 17, 1979, concerning the application of an opinion of the

U.S. Court of Customs and Patent Appeals (*Daisy-Heddon, Div. Victor Comptometer Corp.* v. *United States*, C.A.D. 1228 (1979)), to the tariff classification of cab chassis.

In that opinion, which expressly overruled the majority opinion in *Authentic Furniture Products, Inc.* v. *United States*, 61 CCPA 5, C.A.D. 1109 (1973), but approved the result reached, the court stated:

> * * * There are several factors which may come into play in the determination of whether an article is substantially complete. In a case, such as this, where the article is incomplete due to the omission of one or more parts, as opposed to where an article is incomplete because the material which comprises the article is in need of further processing, the following factors can be relevant: (1) Comparison of the number of omitted parts with the number of included parts; (2) comparison of the time and effort required to complete the article with the time and effort required to place it in its imported condition; (3) comparison of the cost of the included parts with that of the omitted parts; (4) the significance of the omitted parts to the overall functioning of the completed article; and, (5) trade customs, i.e., does the trade recognize the importation as an unfinished article or as merely a part of that article. This list of factors is not exhaustive; it must be recognized that fewer than all of the above factors, or additional factors, may come into play depending on the particular importation. The outcome of each case will always depend on the particular merchandise involved. It would be over-simplification of an essentially difficult juridical problem, often involving a determination of congressional intent, for us to attempt to provide anything more than guidelines for the trier of fact to follow in assessing a given case. * * *

While the notice of October 17, 1979, requested comments concerning the specific issue of the tariff classification of cab chassis, Customs is concerned that the court's opinion in *Daisy-Heddon* may affect other Customs rulings regarding the tariff classification of merchandise imported in substantially complete condition, especially those in which the issue addressed was whether an article was classifiable as an unfinished article or as part of a finished article.

To assist Customs in determining which, if any, tariff classification rulings may be affected, and to assist in reevaluating those rulings in view of the court's opinion, comments from the public, identifying specific rulings and offering opinions concerning the application of *Daisy-Heddon* to each, are requested.

COMMENTS

Consideration will be given to any written comments, preferably in triplicate, timely submitted to the Commissioner of Customs. Comments submitted will be available for public inspection in accordance with section 103.8(b) Customs Regulations (19 CFR 103.8(b)), during

regular business hours at the Regulations and Research Division, Headquarters, U.S. Customs Service, 1301 Constitution Avenue NW., room 2335, Washington, D.C. 20229.

DRAFTING INFORMATION

The principal author of this document was Lawrence P. Dunham, Regulations and Research Division, Office of Regulations and Rulings U.S. Customs Service. However, personnel from other Customs offices participated in its development.

WILLIAM T. ARCHEY,
Acting Commissioner of Customs.

Approved: December 10, 1979.
RICHARD J. DAVIS,
Assistant Secretary of the Treasury.

[Published in the Federal Register Dec. 19, 1979 (44 FR 75258)]

(19 CFR Parts 4, 144, 151, and 159)

Open Conference for Discussion and Clarification of Issues Raised in Comments Concerning Proposed Amendments to the Customs Regulations Relating to Public Gaugers of Imported Petroleum and Petroleum Products

AGENCY: U.S. Customs Service, Department of the Treasury.

ACTION: Notice of conference.

SUMMARY: This document announces that an open conference will be held on January 8, 1980, at 9:30 a.m., in room 3428, Headquarters, U.S. Customs Service, 1301 Constitution Avenue, NW., Washington D.C. 20229, for the discussion and clarification of issues raised in comments submitted in regard to proposed amendments to the Customs Regulations relating to public gaugers of imported petroleum and petroleum products.

FOR FURTHER INFORMATION CONTACT: Alfred G. Scholle or Marvin Amernick, Regulations and Research Division, U.S. Customs Service, 1301 Constitution Avenue NW., Washington, D.C. 20229; 202-566-8237.

SUPPLEMENTARY INFORMATION:

BACKGROUND

On November 7, 1979, the Customs Service published in the Federal Register (44 F.R. 64134), notice of a proposal to amend parts 4, 144, 151, and 159, Customs Regulations (19 CFR parts 4, 144, 151, 159), to incorporate recommendations of a Customs petroleum imports task

force for establishing guidelines and procedures applicable to the use of public gaugers in monitoring imports of petroleum and petroleum products. As fully explained in that notice, the purpose of the proposed amendments is to insure proper control of imported petroleum and petroleum products and uniform, complete, and reliable statistics relating to the importation of these products.

Comments were to have been received on or before December 7, 1979. However, in order to permit interested persons additional time to prepare and submit more detailed comments, the time for the submission of comments was extended to December 14, 1979, by notice published in the Federal Register on November 21, 1979 (44 F.R. 66835).

In response to the notice, Customs received comments from 16 corporations, cooperatives, and organizations. Certain of the commenters requested that, prior to the issuance of a final rule, public discussion be devoted to the issues raised in the comments.

In view of these requests, and because several of the other commenters indicate that there is confusion regarding the impact of the proposals, Customs has determined that a conference should be held to afford an opportunity to discuss and clarify the issues raised. Accordingly, Customs will hold an open conference at 9:30 a.m., on Tuesday, January 8, 1980, in room 3428, Headquarters, U.S. Customs Service. Interested members of the public are invited to participate.

In order that Customs may insure adequate accommodations for all who wish to attend, it is requested that those persons expecting to be present contact Alfred G. Scholle or Marvin Amernick by noon, January 7, 1980, by telephone, 202-566-8237.

Dated: December 19, 1979.

DONALD W. LEWIS,
Director, Office of Regulations and Rulings.

[Published in the Federal Register Dec. 21, 1979 (44 FR 75685)]

U.S. Customs Service

Customs Service Decisions

The following are decisions made by the U.S. Customs Service where the issues involved are of sufficient interest or importance to warrant publication in the CUSTOMS BULLETIN.

Dated: December 14, 1979.

HARVEY B. FOX,
Acting Director,
Office of Regulations and Rulings.

(C.S.D. 79–476)

Classification: VM & P Naphtha; C.S.D. 79–119 Revoked

Date: May 10, 1979
File: CLA-2:R:CV:MC
059793 JH

This ruling concerns Internal Advice No. 24/78, dated July 7, 1978, which classified a product called VM & P Naphtha as a benzenoid mixture in item 403.90, Tariff Schedules of the United States (TSUS).

Facts.—The product was said to consist of:

Component:	*By volume (percent)*
Paraffins	
Naphthas	
Aromatics (total)	
Toluene plus ethylbenzene	
C9 plus aromatics	

The product was classified as a benzenoid mixture in item 403.90, TSUS, because of the amount of benzenoid components present. It is now urged that petroleum products described in schedule 4, part 10, should remain classifiable in part 10, unless the benzenoid product was added.

Law and analysis.—Headnote 1, part 10, schedule 4, states that any product described in part 10 and also in part 1 is classifiable in part 1, except fuel oils, motor fuel, and lubricating oils and greases

containing by weight not over 25 percent of any product described in part 1.

Item 403.90, TSUS, covers benzenoid mixtures in part, in whole of any products in schedule 4, part 1B.

Item 475.35, TSUS, covers naphthas derived from petroleum, shale oil, natural gas, or combinations of both.

The original decision was based on the wording of headnote 1, part 10, and from this it was concluded that a petroleum product, other than the exceptions noted, could not be classifiable in part 10, if it contained a significant amount of benzenoid components.

The naphtha is of petroleum origin and the "benzenoid" hydrocarbons (such as alkylbenzene) present in crude oil do appear in refinery streams. Given the state of the art of petroleum refining (distillation, hydrotreating, catalytic cracking, and hydrogenation) it is probably unavoidable that some synthesis of dutiable benzenoids occurs. It is recognized that these incidentally synthesized compounds are present in refinery streams in relatively small percentages, and that they also are naturally present in virgin crude. Petroleum naphthas containing benzenoid compounds of this nature would have a tariff status different from that of petroleum naphthas to which synthesized benzenoid compounds have been added. These latter naphthas would be classifiable as benzenoid mixtures under item 403.90, TSUS.

Holding.—The petroleum naphtha described herein, not containing any added synthetic benzenoid components, is classifiable as petroleum naphtha in item 475.35, TSUS.

Effect.—Internal Advice No. 24/78, dated July 7, 1978*, is hereby revoked.

(C.S.D. 79-477)

Classification: Rectangular Steel Plates Cut to Size for Use on Off-Highway Trucks

Date: May 29, 1979
File: CLA-2:R:CV:MA
061289 E

To: District Director of Customs, Buffalo, N.Y. 14202.
From: Director, Classification and Value Division.
Subject: Internal Advice Request No. 109/78 concerning the classification of rectangular, hot-rolled, carbon steel plates, cut-to-size.

On May 25, 1978, you requested on behalf of (name) internal

*Published in the CUSTOMS BULLETIN as C.S.D. 79-119.

advice as to whether certain steel plates were entitled to entry under an APTA provision.

Facts.—The merchandise consists of hot-rolled steel plates, not alloyed, and cut to exact rectangular size. The shipper states that it supplies steel for both the boxes and frames of off-highway trucks and, except for side rails, bolsters, and sides, all other articles of the box are rectangular pieces of steel. The merchandise is a product of Canada.

Issue.—Whether the described plates are classifiable under the provision for plates of steel, not cut, not pressed, and not stamped to nonrectangular shape, not coated or plated with metal and not clad, not pickled and not cold rolled, other than alloy steel, in item 608.84, Tariff Schedules of the United States (TSUS), dutiable at the rate of 7.5 percent ad valorem, or are classifiable under the provision for other parts, if Canadian articles and original motor-vehicle equipment, for motor vehicles of a kind described in item 692.02, TSUS, in item 692.28, TSUS, and entitled to free entry.

Law and analysis.—Headnote 1(iv) of part 2, schedule 6, TSUS, in which item 608.84, TSUS, is located, provides that part 2 does not cover parts of articles. Therefore, the question to be resolved is whether the described plates are parts. In this connection, it is a matter of common knowledge that steel plate is ordered by American Society for Testing and Materials standards, and that these standards require that dimensions (thickness, width, and length) be stated as a basis for ordering steel plate. The instant product is a characteristic product of the steel industry which is manufactured, offered, and sold as steel plate.

The shipper draws a distinction between the plates under consideration which he describes as being ordered to exact sizes, and those plates which are ordered to stock sizes. It considers these cut-to-size plates as completely finished components, and accordingly entitled to entry under item 692.28, TSUS.

In I.A. 27/77 (043818) it was stated to be headquarters' position that in order to be classifiable under the provision for parts of automobiles in item 692.27, TSUS, the article (1) cannot be a material, and (2) must be so far advanced in manufacture as to have reached a state at which it can be said that it is dedicated to use as a component of a motor vehicle. In this case, the record indicates the importer will use these plates in the manufacture of trucks. However, to satisfy the dedication requirement, it was pointed out that the article would have the following characteristics:

a. Limited to motor vehicle use. C.D. 2252.

b. Firmly adapted to intended use. C.D. 4143.

c. Precut or marked to indicate the ultimate form of the final article. C.D. 4610.

d. Limited by its shape to a particular use. C.A.D. 831.

e. Not shown to be used for purposes other than to be fabricated into parts of motor vehicles. C.D. 1254.

f. Incapable of being made into more than one article. C.A.D. 1150.

Holding.—Based on the facts in the record it has not been established that the plates have the foregoing characteristics, particularly that its shape limits it to a particular use and that it is incapable of being made into more than one article. Accordingly, the plates are properly classifiable under the provisions of item 608.84, TSUS.

(C.S.D. 79-478)

Classification: Unspun Hemp Baskets and An Abaca Potwrap

Date: June 7, 1979
File: CLA-2:R:CV:MC
055440 PG

Re Internal Advice Request 128/78.

DISTRICT DIRECTOR OF CUSTOMS,
First and Marion Streets,
Seattle, Wash. 98174

DEAR SIR: This request for internal advice concerns the tariff classification of unspun hemp baskets and an abaca potwrap.

Issue.—Whether the unspun hemp baskets and abaca potwrap are classifiable under the textile provisions of schedule 3, Tariff Schedules of the United States (TSUS), or under the provisions for products of fibrous vegetable substances of schedule 2, TSUS.

Facts.—A Headquarters decision dated August 1, 1978 (CLA-R:CV:MC 059434 MG), concerned the proper classification, for tariff purposes, of unspun hemp baskets and an abaca potwrap, products of the Philippines. In this decision, it was held that the hemp baskets were classifiable under the provision for other baskets of unspun fibrous vegetable materials, whether lined or not lined, in item 222.44, TSUS. It was further held that the abaca potwrap was classifiable under the provision for other articles not specially provided for of unspun fibrous vegetables materials, in item 222.64, TSUS.

The inquirer contends that both the hemp baskets and abaca potwrap are schedule 3 textile articles, and therefore preclude from classification in schedule 2 as articles of unspun fibrous vegetable materials. The inquirer further contends that the aforementioned headquarters decision and headquarters Protest Review Decision (P.R.D.) 78-13 (CLA-2:R:CV:MC 051193 EA) are in conflict. The

inquirer relies upon *B.A. McKenzie & Co., Inc.* v. *United States*, 63 Cust. Ct. 110, C.D. 3883 (1969), *Continental Importing Co.* v. *United States*, 63 Cust. Ct. 341, C.D. 3917 (1969), and the eo nomine designations for hemp, abaca, and sisal, appearing under the provisions for vegetable fibers in schedule 3, part 1, subpart B.

Law and analysis.—Schedule 3, headnote 1(i), states:

> 1. This schedule does not cover—
>
> (i) articles of unspun fibrous vegetable materials (see part 2B of schedule 2).

In order to understand exactly what is excluded from schedule 3, one must look to the definition found in schedule 2, part 2, subpart B, headnote 2(d):

> 2. For the purposes of the tariff schedules—
>
> * * * * * * *
>
> (d) the term "*unspun fibrous vegetable materials*" means bamboo, rattan, willow, chip, straw, palm leaf, grass, seagrass, and similar fibrous vegetable substances, which have not been spun.

The phrase "similar fibrous vegetable substances",

> refers to materials such as those named, suitable for use for basketry, wickerwork, blinds, shades, flooring and related products, rather than to materials which are similar in botanical structure. *B. A. McKenzie & Co.*, v. *United States*, 63 Cust. Ct. 110, 117, C.D. 3883 (1969).

As evidenced by the following paragraph in the Tariff Classification Study (C.I.E. 1/64, vol. 1, p. 177), pads of wadding composed of unspun vegetable fibers were not intended to be classified as schedule 2 articles of unspun fibrous vegetable substances:

> It should be noted, however, that one important class of textile products made from unspun vegetable fibers would not be included in this subpart or in any tariff provision elsewhere relating to articles specifically described as being of "unspun fibrous vegetable materials". These textile products are the webs, wadding, padding, and nonwoven fabrics and articles thereof provided for in the textiles schedule (see particularly part 4C of schedule 3). Such nonwoven articles in the textiles schedule would be comprised *essentially of spinnable vegetable fibers in matted form*, whereas the products made of "unspun fibrous vegetable materials" would be interlaced or woven or otherwise assembled in a more orderly manner. [Italic added.]

Hence, in *B. A. McKenzie & Co., Inc.* v. *United States*, 63 Cust. Ct. 110, C.D. 3883(1969), it was held that pads composed essentially of henequen and sisal, belonging to a class of spinnable vegetable fibers in matted form, not interlaced or woven, and used as padding to cover mattress springs, corresponded to definitions of wad and wadding, and therefore were classifiable under item 355.05, TSUS,

as wadding, batting, or nonwoven fabrics, or articles made therefrom, of vegetable fibers, rather than under item 222.64, TSUS, as articles of unspun fibrous vegetable materials. Similarly, in *Continental Importing Co.* v. *United States*, 63 Cust. Ct. 341, C.D. 3917 (1969), rugs composed of unspun sisal fiber, braided, and made into squares which were sewn or otherwise joined to form floor coverings, not woven, were held properly classifiable under item 361.05, TSUS, as floor coverings wholly or in part of braid, in continuous lengths, sewn or otherwise bound together but not woven, of textile materials, rather than under item 222.57, TSUS, as floor coverings of unspun fibrous vegetable materials, other than common China, India, or Japan straw. The articles described in both Customs Court decisions clearly fall within that class of textile products made from unspun vegetable fibers which, according to the aforecited paragraph of the Tariff Classification Study, would be excluded from the schedule 2 provisions for unspun fibrous vegetable materials, and thereby could be distinguished from the articles in the instant case, for reasons enumerated below.

In P.R.D. 78-13, plant hangers composed of sisal fiber were held properly classifiable under item 365.82, TSUS, as other furnishings, ornamented, of vegetable fibers, other, rather than under item 222.64, TSUS, as articles not specially provided for, of unspun fibrous vegetable materials, other. C.D. 3883 and C.D. 3917 in part formed the basis of the holding in P.R.D. 78-13. All three decisions turned on the fact that the articles in question were deemed spinnable vegetable fibers within the meaning of the schedule 3 textile provisions.

Schedule 3, Headnote 2(a)(i), states:

> 2. For the purposes of the tariff schedules—
>
> (a) the term "*textile materials*" means—
>
> (i) the fibers (cotton, other vegetable fibers, wool and hair, silk, and man-made fibers) provided for in part 1 of this schedule

In part 1, subpart B of schedule 3, under the provisions for vegetable fibers, there are eo nomine designations for hemp, abaca, and sisal, among others. Schedule 3, part 1, subpart B, headnote (1)(a), defines the term "vegetable fiber":

> 1. For the purposes of the tariff schedules—
>
> (a) the term "vegetable fiber" means vegetable fiber which can be spun and includes fiber chiefly used for padding and stuffing (such as kapok and crin vegetal), but does not include vegetable fiber chiefly used in the manufacture of brushes and brooms (see part 15 of schedule 1).

Both C.D. 3917 and P.R.D. 7813 followed the interpretation of the term "vegetable fiber" expressed in C.D. 3883:

> [F]or the purposes of the textile schedule, a vegetable fiber is

> one which is spinnable but not necessarily spun. 63 Cust. Ct. at 118.

The Customs Court in C.D. 3883 also pointed out that it was

> significant of congressional intent that sisal and henequen are included in the textile schedule (schedule 3, part 1B) under provisions for vegetable fibers, and not under schedule 2, part 2B, which includes fibrous vegetable substances. 63 Cust. Ct. at 118.

Because a vegetable fiber is one which is spinnable, but not necessarily spun, the crucial problem then arises as to how to distinguish vegetable fibers in schedule 3 from fibrous vegetable substances in schedule 2. C.D. 3917 sheds some light on the matter:

> Evidently Congress intended that the vegetable fibers named in the textile schedule should be dutiable thereunder, but that the plants from which the fibers are obtained should be classed as fibrous vegetable substances. The distinction is not between fibers spun or unspun but between fibers and fibrous vegetable substances from which fiber may be obtained. 63 Cust. Ct. at 346.

Hence, the terms "fibers" and "fibrous vegetable substances or materials" are to be distinguished. Fiber is a "unit of matter, either natural or manmade, which forms the basic element of fabrics and other textile structures." "Manmade Fiber and Textile Dictionary," Celanese Corp. 1974, pages 45–46. Natural fibers are obtained from animals, minerals or plants. "Fabric Science," Joseph J. Pizzuto, 1975, page 22. Plant or vegetable fibers may come from the stem, from the leaves, or from the seed of the plant. ID. Fiber is in a condition ready for spinning, spinning being a twisting process whereby fibers are converted into yarn for textile purposes. "Fairchild's Dictionary of Textiles," page 550.

Fibrous vegetable material, on the other hand, is merely plant material from which spinnable fibers may be obtained as desired. Whereas all vegetable fiber is made from fibrous vegetable material, and in this respect can be said to be fibrous, not all fibrous vegetable material is fiber. Those vegetable fibers provided for eo nomine in schedule 3, part 1, such as hemp, abaca, and sisal, are merely fibers obtained from fibrous vegetable materials. From the foregoing discussion, it follows that a vegetable plant may appear in either an unspun fibrous condition or in fiber form, depending upon processing or the lack thereof. Hence, the inquirer's conclusion that no article made of hemp or abaca can be classified as an article of unspun fibrous vegetable material in schedule 2 is erroneous. While it is clear that a spinnable vegetable fiber is classifiable under the textile provisions of schedule 3, it would appear that if a fibrous vegetable material were incapable of being spun, it would be precluded from classification in schedule 3, and clearly fall within the ambit of schedule 2. For tariff classification purposes, the important consideration as to whether

or not a vegetable material is spinnable, cannot be minimized, as indicated by the Customs Court in C.D. 3917:

> The floor coverings in the instant case meet all the requirements of item 361.05, *supra*. They are composed wholly or in part of braids; the braids are in continuous lengths; the material is sewn or otherwise bound together but is not woven, and the articles are composed of textile materials as defined in the tariff schedules, that is, a vegetable fiber, sisal provided for in schedule 3, part 1, *which has not been shown to be unspinnable*. [Italic added.] 63 Cust. Ct. at 347.

Unlike the articles in C.D. 3917, which were composed of spinnable vegetable fibers, the articles in the instant case, upon examination, were found to consist of crude hemp and crude abaca material which were not in a condition capable of being spun into a yarn for textile purposes. Consequently, these articles consist of unspun fibrous vegetable materials within the meaning of schedule 2, thereby falling outside the scope of schedule 3. The articles in C.D. 3883, C.D. 3917 and P.R.D. 78-13 clearly were spinnable vegetable fibers within the meaning of schedule 3, and therefore are to be distinguished from the articles in the instant case, which consist of unspun fibrous vegetable materials within the meaning of schedule 2.

Holding.—For the above stated reasons, the unspun hemp baskets and abaca potwrap are properly classifiable under the schedule 2 provisions for products of fibrous vegetable substances, rather than under the textile provisions of schedule 3. The hemp baskets are classifiable under the provision for other baskets of unspun fibrous vegetable materials, whether lined or not lined, in item 222.44, TSUS, and are dutiable at the rate of 8.5 percent ad valorem. The abaca potwrap is classifiable under the provision for other articles not specially provided for, of unspun fibrous vegetable materials, in item 222.64, TSUS, and are dutiable at the rate of 5 percent ad valorem. Headquarters decision dated August 1, 1978 (CLA-2:R:CV:MC 059434 MG), is affirmed.

(C.S.D. 79-479)

Classification: Cotton Upholstery Fabric With Fringes; Ornamentation

Date: June 7, 1979
File: CLA-2:R:CV:MC 055392 BB

This ruling concerns Internal Advice Request No. 149/78 on the classification of fabric, in the piece, with "fringes" across the width (your file CLA-2-03:S:C:D10-DEV-471).

Issue.—The questions presented are whether the groupings of protruding five-eighths inch long yarns arranged in alternating double rows across the width of the fabric constitute "fringe" for tariff purposes and, if so, whether the fabric is properly classifiable under the provision for ornamented fabric, in the piece, in item 353.50, Tariff Schedules of the United States (TSUS).

Facts.—The subject material is a cotton upholstery fabric, 54 inches wide, that is hand-loomed by a cottage industry in India. The yarns comprising the fabric appeared to have been neither bleached nor colored. The submitted sample has groupings of protruding five-eighths inch long yarns arranged in alternating double rows, each double row being parallel to and 1 inch from the adjacent double rows. These rows run across the entire width of the fabric.

Law and analysis.—The competing provisions of the Tariff Schedules are as follows:

Schedule 3—Textile Fibers and Textile Products

* * * * * * *

Part 4—Fabrics of Special Construction or for Special Purposes; Articles of Wadding or Felt: Fish Nets; Machine Clothing

* * * * * * *

Subpart A—Knit, Pile, Tufted and Narrow Fabrics; Braids and Elastic Fabrics

* * * * * * *

Pile Fabrics in which the pile was inserted or knotted during the weaving or knitting, whether or not the pile covers the entire surface, and whether the pile is wholly or partly cut or is not cut:

Of cotton:

Corduroys:

346.05	52 inches or more in width and valued 50 cents or more per square yard.	23% ad val.

* * * * * * *

346.45	Other	15% ad val.

* * * * * * *

Subpart B—Lace, Netting and Ornamented Fabrics

Subpart B headnotes:

1. * * * Fabrics described in Part 3, Part 4A, or Part 4C of this schedule are covered by item 353.50 if ornamented.

353.50	Ornamented fabrics, in the piece, and ornamented motifs, not specially provided for.	21% ad val., but in the case of ornamented fabrics not

less than the rate which would apply to such fabrics if not ornamented.

The first question presented is whether the subject fabric can properly be classified as "corduroy." The fabric is constructed in much the same way as corduroy because an extra system of filling yarns is inserted during the weaving process. These yarns are woven in such a way that "floats" are created over three or more of the same warp yarns throughout the fabric. After weaving these floats are cut in the center, creating a pile.

However, according to "Fairchild's Dictionary of Textiles" (1970 ed.), after cutting the floats in a true corduroy fabric "the fibers tend to spring upward and later are brushed up to form the pile in ridges or cords. These ridges are rounded, with the longest fibers in the center (formed by longer floats) and the shortest fibers on each side (formed by the shorter floats)." An examination of the subject fabric reveals that the protruding yarns do not tend to "spring upward" but rather because of their length, tend to lie flat. These yarns have not been brushed, they do not form ridges and they have not been rounded.

A survey of importers revealed that due to the subject fabric's unusual appearance and hand, it is not commonly or commercially known as corduroy. It is a longstanding principle of Customs law that "if the imported merchandise falls within the commercial designation of the term, it is dutiable as such. If it falls outside said commercial designation, it is not so dutiable." *United States* v. *Georgia Pulp and Paper Mfg. Co.*, 3 Ct. Cust. Appls. 410, 416–17, T.D. 32998 (1912). Recent restatements of the same principle are found in *Excelsior Import Associates, Inc.* v. *United States*, C.A.D. 1212 (1978) and *Ameliotex, Inc.* v. *United States*, C.A.D. 1200 (1977). Applying this principle, it appears that the subject fabric would not be classified as corduroy.

The next question is whether this fabric is properly classified under the provision for other pile fabrics of cotton in item 346.45, TSUS. While there is apparently some support in the trade for the position that the fabric might be considered a "novelty" pile, a survey of fabric retailers indicates that none of them would sell the fabric as a pile. Instead, it was described as an "eyelash" or a decorator fabric. We conclude that the subject fabric is commercially known neithre as corduroy nor as a pile fabric.

The question remaining is whether the subject material can properly be classified as an "ornamented" fabric. Schedule 3, headnote 3, TSUS provides that:

307-462—79——4

For the purposes of the tariff schedules—

(a) the term "*ornamented*", as used with reference to textile fabrics * * * means fabrics * * * which are ornamented with—* * * (iii) * * * fringe.

Headnote 3 further provides that:

(b)(iii) * * * fringe * * * shall not be required to have had a separate existence from the fabric * * * on which it appears in order to constitute ornamentation for the purposes of this headnote."

Therefore, if the projecting ends are "fringe", the fabric can properly be considered "ornamented" under this headnote.

We have already seen that "fringe" need not have a separate existence from the fabric on which it appears and that it constitutes ornamentation whether or not produced in the course of manufacturing the article. Schedule 3, headnote 3(b)(iii), *Intermaritime Fwdg. Co., Inc.* v. *United States*, 69 Cust. Ct. 138, C.D. 4384 (1972). It is also well settled that there is no requirement or limitation that "fringes" be utilized as borders or border material. In *Lilli Ann Corporation* v. *United States*, 51 Cust. Ct. 121, 126, C.D. 2418 (1963), appeal dismissed, 51 CCPA 129 (1964), the fringe was formed by loose hanging warp threads at regular intervals throughout the fabric. A similar arrangement of clipped threads was not held to be fringe in T.D. 56295(111), solely because the threads did not exceed one-quarter inch in length.

Given this case law, nothing precludes considering the protruding groupings of yarns in the subject fabric to be "fringe." The length and arrangement of the protruding yarns makes them appear like what would commonly be designated fringe. Therefore, we conclude that our original classification of this material as an ornamented fabric, in item 353.50, TSUS, was correct.

(C.S.D. 79-480)

Classification: Necessity of Use Certificate for Material Used in the Manufacture of Tires

Date: June 19, 1979
File: CLA-2:R:CV:MC
060205 PR

District Director of Customs,
200 East Bay Street,
Charleston, S.C.

Dear Sir: In our response of December 19, 1978, to your Request for Internal Advice, No. 97/76, it was determined that certain merchan-

dise was properly classifiable under the provision for textile fabrics for use in pneumatic tires, in item 357.80, Tariff Schedules of the United States (TSUS), provided, however, that the certification requirement of section 10.138, Customs Regulations, is complied with.

In accordance with a request by the party originally initiating Internal Advice Request No. 97/76, headquarters sought information from our National Import Specialist on whether the Customs Service has been requiring compliance with section 10.138 on entries involving merchandise that has been classified in item 357.80, TSUS. The National Import Specialist has advised us as follows:

> Records available at the New York Seaport indicate that certification of actual use has never been required if the importer was a known tire manufacturer and the merchandise was obviously constructed for the purpose of making tires. An informal telephone survey of a number of other ports which have reported shipments in the past also indicated a similar procedure. Furthermore, it is noted that, according to information on file, fabric intended for use in pneumatic tires has never been classified elsewhere but under the specific position bearing that title.

In view of this information, the Customs Service has determined that all unliquidated entries covering merchandise entered before the issuance of our response to Internal Advice Request No. 97/76 which, except for the requirements of section 10.138, would be liquidated under item 357.80, TSUS, should be liquidated under that tariff provision. All entries covering similar merchandise, if entered after December 19, 1978, must comply with section 10.138.

(C.S.D. 79–481)

Classification: Disposable Headwear; Nonwoven Textile Material

Date: June 19, 1979
File: CLA-2:R:CV:MC
061187 MH

■

This ruling is in response to Request for Internal Advice No. 18/79 concerning disposable headwear.

Issue.—Whether the instant merchandise constitutes a paper article for tariff purposes.

Facts.—No sample of the merchandise is presented. The instant product is a piece of disposable headwear. It is produced on a machine known as Rotoformer, a sheet forming device which is used for the handling of papermaking pulp and manmade fibers for the production

of disposable nonwoven fabrics. According to advertising literature which was submitted, the Rotoformer is capable of handling the extremely dilute solutions necessary for forming synthetics containing long fibers. Through changes of stock, suction box, and Pond Regulator settings, the nature of the product can be widely varied.

Law and analysis.—Headquarters has consistently ruled that "paper" must be manufactured on a complete papermaking machine, without modification, utilizing a wet process. A nonwoven fabric, by contrast, may be produced by the equipment which, though similar to that used in the manufacture of paper, is modified to produce nonwovens.

The Tariff Classification Study, CIE 1/64, page 859, states that although nonwoven fabrics often closely resemble paper, they are distinguishable therefrom in that the textile fibers in nonwovens are not digested in the process of manufacture. The "Dictionary of Paper" (3d ed. 1965) defines nonwoven fabric as a cloth-like material made of fibers longer than those normally used in papermaking, which is formed by felting on a fine mesh screen from an air or water suspension.

The length of the fibers is one means of distinguishing nonwovens from paper. Fibers used in nonwoven technology are generally 6 to 12 millimeters in length while papermaking fibers are between 1 and 4 millimeters in length.

The Rotoformer is capable of producing much more than apper. The machine is "a leader in the development of wet formed nonwovens." It can produce sheets using long fibers which cannot be formed on conventional papermaking machines. This is accomplished by separating the fibers from the pulp in the initial stage and using a great deal of water to keep the fibers far apart. The Rotoformer also differs from a conventional papermaking machine in that the stocks, the Pond Regulator, and the suction boxes can each be regulated depending upon the length of the fiber used and the product desired.

The Rotoformer is clearly a modification of the conventional papermaking machine. Its products cannot, therefore, be considered paper for tariff purposes.

The instant material is commercially known as a nonwoven textile material. It contains textile fibers which are longer than those used in papermaking and are not digested in the process of manufacture.

Holding.—The instant merchandise is classifiable as a nonwoven textile material for tariff purposes.

(C.S.D. 79-482)

Export Value: Transactions Between Foreign Parent Corp. and U.S. Subsidiary Corp.

Date: June 21, 1979
File: R:CV:V RP
055492

Re Reconsideration of Application for Further Review of Protests Nos. 3801-7-000087 and 3801-7-000088

DISTRICT DIRECTOR OF CUSTOMS,
Detroit, Mich.

DEAR SIR:

Issue.—Whether the transactions between the Canadian exporter and the related U.S. importer constitute sales, and whether the invoice prices for such sales fairly reflect the market value of the merchandise, thereby establishing an export value under section 402(b) of the Tariff Act of 1930, as amended?

Facts.—The entries in question involve importations of various store fixtures and furnishings. The exporter and manufacturer was (Canadian Parent Corp.). The importer was (U.S. Subsidiary Corp.). The latter is a subsidiary of the Canadian corporation. The merchandise entered was appraised on the basis of export value, section 402(b), Tariff Act of 1930, as amended, that value being determined by using the resale price to the ultimate U.S. purchaser. The importer protested this appraisement and claimed that the invoice price constituted the export value. The invoice price represents the sale price between the exporter and its U.S. subsidiary. In our ruling of August 18, 1978, we held that in light of the evidence submitted, the alleged sales between the foreign exporter and its U.S. subsidiary were not bona fide for Customs purposes. The protest was denied in full.

It remains the opinion of your office that there were no bona fide sales between the exporter and importer, and that the additional evidence submitted by the importer for our reconsideration does not warrant a reversal of headquarters' prior decision.

It is your contention that the report of investigation highlighted the following items as the basis for questioning the alleged buyer-seller relationship:

(a) Large markup on sales by (Subsid. Corp.) to ultimate purchaser in the United States.

(b) Payments are made to (Parent Corp.) by (Subsid. Corp.) in group amounts not relating to individual orders.

(c) The role of the factoring company is not sufficiently ex-

plained as it relates to the intercompany relationship and as it relates to (Subsid. Corp.) as an independent company.

(d) Most shipments are sent from (Parent Corp.) Canada direct to the U.S. customer of (Subsid. Corp.).

(e) (Subsid. Corp.) officers are Canadian citizens except (One named officer).

(f) There is only a small showroom office in the United States; access is by appointment only.

(g) All books and records of (Subsid. Corp.) are retained in Canada; all bookkeeping is done by (Parent Corp.).

The protestant has submitted additional information to support his contention that the transactions in question constitute "sales" and that the invoice prices for such sales fairly reflect the market value of the merchandise, thereby establishing export value under section 402(b).

Law and analysis.—The first issue to be considered is whether or not the additional evidence submitted is sufficient to establish that a buyer-seller relationship existed between (Subsid. Corp.) and (Parent Corp.) and that the subject transactions constituted bona fide sales for Customs purposes. The Court of Customs and Patent Appeals in the case of *J. L. Wood* v. *United States*, 62 CCPA 25, C.A.D. 1139 (1974) determined that the existence of a parent-subsidiary relationship is not, of itself, reason to preclude the existence of a sale. The Court defined a sale as a transfer of property from one party to another for a consideration. Upon consideration of the additional information submitted by the importer (Subsid. Corp.), we are of the opinion that the importer is a real and viable corporate entity capable of purchasing and reselling on its own account. The evidence indicates that the importer was properly incorporated under the laws of the United States and therefore constituted a separate legal entity. While it is true that there was some overlapping of officers between the importer and exporter, it appears that the day to day activities were conducted for the most part, by employees and officers who worked in the United States. The importer leased warehouse space in the United States, maintained an office in the United States and kept books of accounts separate and distinct from those maintained by the exporter. In addition, the importer incurred and paid in its own name significant expenses in the form of salesmen's commissions and benefits, travel expenses, rent, office expenses, Customs brokers' fees, freight, shipping costs and taxes. In short we agree with the importer that it was an active corporate entity during the period in question.

We are also of the opinion that the additional evidence submitted by the importer is sufficient, in light of *J. L. Wood, supra*, to establish that the transactions between the importer and exporter represented

actual sales. First, there is evidence of invoices from the exporter to the importer indicating that sales had taken place, and that the importer reimbursed the exporter on a regular basis for those sales. Also, it appears that the importer corresponded with customers in the United States in its own name and accepted payment. On those shipments which were made directly from the exporter to the ultimate purchaser in the United States, the evidence indicates that the importer was the seller of the merchandise. It also appears that the importer distributed price information and accepted offers here in the United States. As far as the ultimate purchaser in the United States was concerned, it appears clear that he contracted only with the importer and could look only to the importer for any legal cause of action on default. In addition, the evidence indicates that the importer's factoring company in the United States had no contractual or other relationship with the exporter. The importer's invoices were forwarded to the factoring company which credited the importer's account and then forwarded the invoices for collection in the usual manner. In light of all of the above, it is our conclusion that the transactions between the importer and exporter did constitute bona fide sales for Customs purposes.

The next issue to consider is whether the invoice price between the related parties fairly reflects the market value within the meaning of section 402(f)(1)(b), Tariff Act of 1930, as amended. In this regard, the question arises as to what evidence should be viewed as acceptable or determinative in arriving at the conclusion that a given transaction price between related parties does or does not fairly reflect the market value of the imported merchandise. As you know, there is no hard and fast rule as to the proofs needed to establish that a price to a selected purchaser fairly reflects market value. Factors which have been considered by the courts are the bona fides of the transactions whether or not the transactions were at arm's length, the practices of others engaged in the same class of trade, whether there is evidence sufficiently accounting for any differences in price or costs, and sales to unrelated customers in the United States at comparable prices. On the other hand, reference to cost of production, home market sales and third country sales have been held to be improper in establishing statutory export value. In this regard, see *D. H. Baldwin Co. and Koeller Struss Co.* v. *United States*, C.A.D., 1208 (1978).

In this particular case the importer has submitted evidence to support a finding that the sales between the related parties were arm's length transactions. The importer's evidence indicates that the parties bargained over the sales prices established by the related Canadian manufacturer, and on several occasions, where the prices were considered unacceptable, the related U.S. importer purchased

store fixtures from other Canadian manufacturers at prices below those quoted for the same merchandise by the related Canadian manufacturer. Because the U.S. importer was the sole distributor for the related Canadian manufacturer in the United States, there were no sales by the manufacturer to unrelated U.S. customers, as in *J. L. Wood.* However, it is our opinion that in accordance with T.D. 78-344, the importer's explanation of the circumstances of sale, indicate that the transactions were arm's length transactions. In addition, there is no evidence in the file indicating that prices charged by the Canadian manufacturer were arrived at by collusion between the buyer and seller. Therefore, in this particular case, we find sufficient proof that the invoice prices between the related parties fairly reflect market value, and can be utilized to establish export value.

Holding.—Based on additional evidence submitted by the importer, we are of the opinion that the transactions between the Canadian exporter and related U.S. importer constitute bona fide sales for Customs purposes. Furthermore, we find sufficient evidence to establish that the invoice prices for such sales fairly reflect the market value of the imported merchandise, thereby establishing export value within the meaning of section 402(b). Accordingly, you are directed to allow the protest in full.

(C.S.D. 79-483)

Classification: Women's or Girls' Blue Denim Jeans; Ornamentation

Date: June 22, 1979
File: CLA-2:R:CV:MC
061272 MH

Re Decision on Application for Further Review of Protest No., 5304-8-000001.

This decision concerns a protest filed against your decision in the liquidation of the following entry covering a pair of denim jeans:

Entry No.: 101495.
Entry date: June 20, 1978.
Date of liquidation: August 25, 1978.
Date of protest: November 22, 1978.

Issue.—Whether the "stand" portion of the waist pocket of the instant jeans constitutes ornamentation for tariff purposes.

Facts.—The submitted sample is a pair of women's or girls' blue denim jeans. The sample contains two front slash pockets, two rear patch pockets, a zippered front secured by two metal buttons at the top, and contrasting colored stitching, at most seams. The waistband

is approximately 2¾ inches wide. The back half of the waistband is elasticized. On each side of the front opening, directly above each of the front pockets, is an inserted stand type pocket. Each of these pockets has a 3-inch long opening. Most of the opening is taken up with a doubled over matching denim fabric that serves as the "stand" portion of the pocket opening. Measured from the top of the stand portion the pocket is approximately 1 inch deep.

Law and analysis.—Headnote 3, schedule 3, sets forth the types of embellishments which may constitute ornamentation, for tariff purposes. In order to constitute ornamentation, the feature must serve a primarily decorative rather than utilitarian function. *Blairmoor Knitwear Corporation* v. *United States*, 62 Cust. Ct. 388, C.D. 3396 (1968).

In Headquarters Ruling Letter (HRL) 054277, a stand pocket substantially similiar to the instant pocket was held to constitute ornamentation because of its limited depth. The pocket was deemed not to simulate a functional pocket because of its location.

It is suggested that the instant pocket is distinguishable from the one that was the subject of the previous ruling. Unlike that merchandise, the instant pocket is not of contrasting color fabric. Thus, it is argued, the instant feature was not intended to enhance the garment.

Although the Customs Service did note in HRL 054117 that the reason for using contrasting fabric was to enhance the garment, that observation was by no means necessary to the result. In *Baylis Brothers* v. *United States*, 60 Cust. Ct. 336, C.D. 3383 (1968) the court addressed this precise point. It stated: (at 347)

> We agree that in determining whether the dresses are ornamented, the evidentiary issue, as stated above, is whether the primary purpose of the stitching is for decoration rather than utility. The term "purpose" as used here, as well as in the decisions cited above, must of course, be understood to mean function rather than the subjective intent of the manufacturers. It is the resultant effect of, and not the claimed motivation for, the stitching which determines the issue.

The instant "pocket", because of its limited depth, serves a primarily decorative function. It thus constitutes ornamentation, for tariff purposes.

Holding.—The submitted sample is classifiable in item 382.00, TSUS, as classified. You are therefore directed to deny the protest in full.

307-462—79——5

(C.S.D. 79–484)

Export Value: Transactions Between Foreign Parent Corp. and U.S. Subsidiary Corp.

Date: June 27, 1979
File: R:CV:V RP
061224

Re: Application for Further Review of Protest.

DISTRICT DIRECTOR OF CUSTOMS,
Chicago, Ill.

This ruling concerns Customs valuation of certain binding machines imported into the United States from Switzerland.

Issue.—Whether the transactions between the related exporter and U.S. importer constitute bona fide sales, and if so, do the invoice prices for the subject transactions fairly reflect market value so as to establish export value within the meaning of section 402(b) of the Tariff Act of 1930, as amended? In the event that export value cannot be established, the question becomes one of determining whether or not a U.S. value, within the meaning of section 402(c) of the Tariff Act of 1930, as amended, exists for the subject merchandise.

Facts.—The merchandise in the instant case consists of combination punching-binding machines, and binding machines manufactured by (Parent Corp.) of Switzerland, and imported into the United States by (Subsid. Corp.) a wholly owned subsidiary of (Swiss Parent). The majority stockholders of (U.S. Subsid.) are the principal officers of (Swiss Parent).

Upon entry, the merchandise was appraised on the basis of (U.S. Subsid.) domestic resale price to distributors, less a 5-percent cash discount, ocean freight, insurance and duty, as representing constructed value (section 402(d)).

The appraising officer determined that invoice unit values between (Swiss Parent) and (U.S. Subsid.) did not fairly reflect the market value of the merchandise, and therefore, could not be used to establish either an export value or a U.S. value. It was further determined that (U.S. Subsid.) was a mere selling agent of (Swiss Parent) and not a bona fide purchaser of the subject merchandise. It should be noted that no such or similar merchandise was imported from Switzerland during the period in question.

It is the position of (U.S. Subsid.) that it is a separate corporate entity, and although "related" to the Swiss manufacturer (U.S. Subsid.) is not an agent of (Swiss Parent). (U.S. Subsid.) contends that the subject transactions consitute bona fide sales, and that the

invoice prices fairly reflect the market value of the merchandise, thereby establishing export value. In the alternative (U.S. Subsid.) argues that if an export value cannot be satisfactorily determined for the instant merchandise, the proper basis of appraisement would be U.S. value, as defined in section 402(c). (U.S. Subsid.) claims that the imported binding machinery is freely sold or offered for sale to all purchasers at wholesale in the United States, and that the freely offered price in this country, less certain claimed allowances, represents the U.S. value of the merchandise.

It is the opinion of your office that neither export value nor U.S. value exists for the subject merchandise, and that the binding machinery was properly appraised under constructed value. It is your opinion that (U.S. Subsid.) is merely an agent of (Swiss Parent) and that correspondence between (Swiss Parent) and a large U.S. distributor of the instant merchandise indicates that (Swiss Parent) controlled the determination of resale prices in the United States. In light of this information, you contend that the invoice prices from (Swiss Parent) to (U.S. Subsid.) do not reflect arms length transactions, and that neither export value nor U.S. value exists for the subject binding machinery.

Law and analysis.—The export value of imported merchandise, as defined in section 402(b), Tariff Act of 1930, as amended, is the price at the time of exportation to the United States of the merchandise undergoing appraisement, at which such or similar merchandise is *freely sold* or, in the absence of sales, offered for sale in the principal markets of the country of exportation * * * The term "freely sold" as defined in section 402(f)(1) means sold or, in the absence of sales, offered to all purchasers at wholesale, or in the ordinary course of trade *to one or more selected purchasers at wholesale at a price which fairly reflects the market value of the merchandise.* [Italic supplied.]

Before we would be able to adopt the prices between (U.S. Subsid.) and (Swiss Parent) as establishing statutory export value, two major issues must be resolved: (1) Whether the transactions between these related parties constitute "sales" within the meaning of section 402(b), and (2) if these transactions constitute sales, whether the prices "fairly reflect the market value of the merchandise" within the meaning of section 402(f)(1)(b).

In *J. L. Wood* v. *United States*, 62 CCPA 25, C.A.D. 1139 (1974), the court held that for the purposes of sections 402(b) and 402(f), the term "sale" should be given its ordinary meaning, namely, "transfers of property from one party to another for a consideration."

In this regard, review of the available evidence in the instant case indicates that (U.S. Subsid.) is a corporate entity separate and dis-

tinct from (Swiss Parent) of Switzerland. The evidence further demonstrates that the transactions between the related parties are accomplished by invoicing the merchandise exported to (U.S. Subsid.) with payment back to the Swiss parent. In addition, we are satisfied that in the entries involved in this protest, (U.S. Subsid.) could accept or reject offers from purchasers in the United States without obtaining the approval of (Swiss Parent). Moreover, the evidence indicates that the risk of loss passes to (U.S. Subsid.), at the time the merchandise is exported from Switzerland. We note that the entry documents submitted to Customs with respect to the subject transactions designate (Swiss Parent) as seller and (U.S. Subsid.) as purchaser.

Therefore, in light of *J. L. Wood, supra,* we conclude that these related party transactions constitute sales within the meaning of section 402(b). The next issue to consider is whether the invoice price between the related parties fairly reflects the market value of the imported merchandise. As you know, there is no hard and fast rule as to the proofs needed to establish that a price to a selected purchaser fairly reflects market value. Factors which have been considered by the courts are the bona fides of the transactions, whether or not the transactions were at arm's length, the practices of others engaged in the same class of trade, whether there is evidence sufficiently accounting for any differences in price or costs, and sales to unrelated customers in the United States at comparable prices. On the other hand, reference to cost of production, home market sales and third country sales have been held to be improper in establishing statutory export value. In this regard, see *D. H. Baldwin Co. and Koeller Struss Co.* v. *United States,* —— CCPA, ——, C.A.D. 1208 (1978), and cases cited infra.

In the case before us, it is our opinion that the evidence of record regarding the circumstances of sale and relative markups of the exporter and importer, is insufficient to establish that the invoice prices between (U.S. Subsid.) and (Swiss Parent) fairly reflect the market value of the subject binding machinery. Therefore, absent sufficient proof that the invoice prices fairly reflect market value, such prices cannot be utilized to establish export value for the imported merchandise. Accordingly, we are required under section 402(a)(2) to consider U.S. value as an alternative basis of appraisement.

U. S. value is defined in pertinent part as:

> (T)he price, at the time of exportation to the United States of the merchandise undergoing appraisement, at which such or similar merchandise is freely sold or * * * offered for sale in the principal markets of the United States for domestic consumption, * * * with allowances made for—

(1) any commission usually paid or agreed to be paid, or the addition for profit and general expenses usually made, in connection with sales in such market of imported merchandise of the same class or kind as the merchandise undergoing appraisement.

(2) the usual costs of transportation and insurance and other usual expenses * * *

(3) the ordinary Customs duties and other Federal taxes currently payable * * * and any Federal excise taxes * * *.

The evidence of record indicates that the subject merchandise was freely sold in the United States to all wholesalers at distributor price list prices less certain cash discounts. For machines exported from March 1, 1976, to December 31, 1976, and January 1, 1977, to April 1, 1977, the cash discount amounted to 5 percent of the freely offered price list price. For machines exported after April 1, 1977, the cash discount amounted to 3 percent. No cash discounts were offered for machines exported during the year 1975 through March 1, 1976. Cash discounts, if freely offered to all purchasers, would be a permissible allowance under U.S. value. With respect to other allowances permitted under section 402(c), the evidence reveals that (U.S. Subsid.) is the only seller in the United States of merchandise of the class or kind under appraisement, therefore its actual profit and general expenses made on the sale in the United States become that "usually made" under section 402(c)(1). *United States* v. *Jovita Perez*, C.A.D. 407 (1949). We note that the amounts claimed as (U.S. Subsid.)'s actual general expenses and profit are not at issue in this case. In light of the above, we believe that U.S. value, section 402(c), is the proper basis of appraisement for the subject merchandise.

Holding.—The evidence before us in this particular case is insufficient to establish that the invoice prices between (U.S. Subsid.) and (Swiss Parent) properly reflect the export value of the protested merchandise. However, it is our opinion that a U.S. value can be established, and should, therefore, be used as the basis of appraisement for the imported machinery. The actual U.S. value would be determined by taking (U.S. Subsid.)'s distributor list price to U.S. purchasers, less the percentage cash discount (when freely offered to all purchasers), and less allowances for ocean freight and insurance, inland freight, brokerage charges, profit and general expenses, and U.S. duty.

Therefore, you are directed to allow the protest in accordance with this decision.

(C.S.D. 79–485)

Classification: Belting Material

Date: July 3, 1979
File: CLA-2:R:CV:MC
055444 PR

AREA DIRECTOR OF CUSTOMS,
New York Seaport, 6 World Trade Center,
New York, N.Y.

DEAR SIR: This is in reply to your request for Internal Advice No. 160/78, concerning the tariff status of belting material. It is your belief that material used in the production of belts and belting has been uniformly classified throughout the country in items 358.05 through 358.16, Tariff Schedules of the United States (TSUS), without regard to whether that merchandise is cut to size either in the length or the width.

In accordance with your request, we have surveyed most of the principal district directors and determined that a uniform and established practice does, in fact, exist with respect to belting material which will be used in the manufacture of belts. The practice is as stated in your memorandum. Accordingly, all material to be used as belts or in the manufacture of belts, whether cut to either length or width or even if not cut to either length or width, is classifiable in items 358.05 through 358.16, TSUS, as appropriate. Any prior decisions of this office to the contrary are hereby revoked.

(C.S.D. 79–486)

Classification: Racks Imported Alone and Racks and Pinions are Classified Under Item 680.44, TSUS

Date: June 10, 1979
File: CLA-2:R:CV:MA
061442 LXL

To: District Director of Customs, Chicago, Ill.
From: Director, Classification and Value Division.
Subject: Classification of rack gears produced in Ireland and England; subject of Internal Advice No. 128/79.

This is a ruling on the classification of racks and pinions.

Facts.—The primary merchandise in issue in this case is a steel product known as a "rack". Racks have not been uniformly classified. Some racks have been classified as parts of machines not specially provided for and parts thereof in item 678.50, Tariff Schedules of the United States (TSUS). Some racks have been classified as parts of

particular machine tools or as parts of some particular device that they were used in.

One customs officer notes that the racks have multipurpose applications, such as driving resolvers, tachometers, machine tools, measuring systems, and other types of positioning or speed devices. This officer is of the opinion that the racks should be classified as parts of fixed ratio speed changers under the provisions as provided for in item 680.44, TSUS. The inquirer is in agreement with the foregoing contention.

Simply described a "rack" appears to be a rectangular bar of steel with gear teeth on one edge.

Literature, blueprints, mechanical drawings, catalog sheets, and various articles were furnished, which lend much support to the classification of the racks as parts of fixed ratio changers. The racks may be ordered in various sizes, grades of precision from A to C (the highest) and various grades of gear tooth precision, varying from grade 1 to 4 (the highest).

Issue.—Are racks classifiable as parts of various devices, or as parts of machines not specially provided for in item 678.50, TSUS, or as parts of fixed ratio speed changers in item 680.44, TSUS?

Law and analysis.—The fourth edition of "Van Nostrand's Scientific Encyclopedia" defines a rack as, "a straight-line spur gear, and may also be defined as a spur gear whose pitch radius approaches infinity as a limit. A rack and pinion may be used in combination to convert rotary to reciprocating, or reciprocating to oscillatory motion." The rack is used whenever it is necessary to translate rotary motion to linear motion or vice versa. It is the main gear drive in milling machines and broaches used in the machine tool industry. It is basic to high-accuracy gearing in precision devices such as radar systems, aircraft automatic controls, and precision automatic measurement and machine tool readout devices. It is also used wherever precision positive alinement is needed and is essential to position machine tool cutting heads. Even though generally the rack is a final drive gear, it may also be used to drive a spur gear.

Imported alone, the rack is only a straight toothed gear, but com bined with pinions, or spur gears of various pitches and diameters (number of teeth) it is capable of increasing or decreasing speed. Whenever two gears of any kind are combined in a driven system, there is a potential for changing speeds.

other competing provisions. Furthermore, we note that the language in

Frequently racks are imported alone, but may be imported with matching pinions or spur gears or with gearbox assemblies, designed to function with the racks.

The tariff schedules specifically provide for "gearboxes and other speed changers with fixed, multiple, or variable ratios—all the fore-

going—and parts thereof." We find this provision of the tariff schedules to be specific than various other parts provisions in view of the fact that it specifically provides for this class or kind of merchandise and its component parts. We believe it unnecessary to discuss the various other competing provisions. Furthermore, we note that the language in the Brussels Nomenclature, in section 84.63, for gearboxes and speed changers is similar to TSUS language and subpart C of the section states clearly that, "the heading covers all types of gears including simple cog wheels, bevel gears, conical gears, helical gears, worms, *rack* and pinion gears, differential gears, etc., and assemblies of such gears." [Italic furnished.]

Holding.—Racks imported alone, and racks and pinions, are specifically provided for under the provision for other parts of fixed ratio speed changers, in item 680.44, TSUS, and are dutiable at the column 1 rate of 4.5 percent ad valorem.

(C.S.D. 79-487)

Export Value: Sales to Selected Purchaser as Fairly Reflective of Market Value; Sections 402(b) and (f)(1)(B), Tariff Act of 1930, as Amended

Date: August 16, 1979
File: R:CV:V RP
055292

To: District Director of Customs, Seattle, Wash.

From: Director, Classification and Value Division, Headquarters, Washington, D.C.

Subject: Reconsideration of Internal Advice No. 111/76.

This is in reference to your memorandum for reconsideration of IA 111/76.

Issue.—Whether the transactions between the exporter and a selected purchaser constituted actual sales and, if so, did the prices for the transactions fairly reflect market value so as to establish export value within the meaning of section 402 (b) and (f)(1)(B), Tariff Act of 1930, as amended?

Facts.—The initial request for internal advice dealt with the appraisement of Canadian softwood veneer manufactured by (name of manufacturer/exporter), B.C., Canada, and imported through (name of importer), Tacoma, Wash. Three issues were raised in that request: (1) Whether the relationship between the exporter and the importer was that of buyer-seller or seller-selling agent in determining the dutiability of commissions paid the importer by the exporter and, what basis of appraisement is utilized once the relationship is deter-

mined, (2) whether a freight rebate is a nondutiable charge and, (3) whether brokerage fees are part of dutiable value.

The response issued by Customs indicated that both the freight rebate and brokerage fees were nondutiable. The only issue under reconsideration is the basis of appraisement for the imported veneer. (See ORR ruling file No. 541638.)

The importer's position is that the sales price from the exporter to the importer fairly reflects the market value of the merchandise in question and, therefore, the proper basis of appraisement is export value under section 402(b) of the Tariff Act of 1930, as amended. It was noted in the response to the request for internal advice that the importer had submitted information to establish that prices to the selected purchaser did fairly reflect the market value, but concluded that since Customs field officials did not consider whether the sales prices fairly reflected the market value, that question should be reviewed by the field. It was indicated that the determination should be made in accordance with the principles outlined in T.D. 76–118. While headquarters, in IA 111/76, did determine that the transactions between the importer and exporter did constitute sales within the meaning of 402(b), the district director in Seattle requested reconsideration of the internal advice in light of the Customs Court decision *D. H. Baldwin Co. et al.* v. *United States*, C.A.D. 1208 (1978).

Law and analysis.—We find nothing in the evidence presented to warrant a reversal of our decision that the transactions between the exporter and the importer constituted sales within the meaning of section 402(b) of the Tariff Act of 1930, as amended. In *J. L. Wood* v. *United States*, 62 CCPA 25, C.A.D. 1139 (1974), it was held that the term "sale" should be given its ordinary meaning, that being, "transfers of property from one party to another for consideration." As long as *J. L. Wood*, *supra*, remains the law, the U.S. Customs Service has no alternative but to apply this definition in making the determination whether a sale has occurred.

However, a determination that "actual sales" to a selected purchaser occurred does not, ipso facto, imply that prices for the transactions fairly reflect the market value so as to establish export value within the meaning of section 402(b) and (f)(1)(B), Tariff Act of 1930, as amended. Whether or not a price to a selected purchaser fairly reflects market value is the focal issue in the instant request.

In T.D. 76–118, Customs interpreted *J. L. Wood*, *supra*, as follows:

> Where there are sales to a related selected purchaser and to several unrelated selected purchasers, or merely sales to several unrelated selected purchasers at the same price, then it (Customs Service) is bound to look only to the exporting country's market for exportation to the United States * * * when the necessary

> market evidence is not available, i.e., when there are sales only to related selected purchasers or sales only to one unrelated selected purchaser * * * the Customs Service is required to look to whatever evidence might be available for comparison purposes * * *.

In light of *Baldwin, supra*, T.D. 78–344 has modified the position of the Customs Service on sales to selected purchasers, as was originally set forth in T.D. 76–118. In this most recent Treasury decision it is stated:

> In T.D. 76–118, 10 Cust. Bull. 206 (1976), the Customs Service interpreted *J. L. Wood* as permitting the use of six standards for comparison purposes in those instances where the evidence necessary to establish a market value is lacking; i.e., where there are sales only to related selected purchasers, or sales only to one unrelated selected purchaser. In *D. H. Baldwin Co.* v. *United States*, C.A.D. 1208 (June 1, 1978), the Court of Customs and Patent Appeals ruled that the use of cost of production, home market sales and third country sales, as listed in T.D. 76–118, for comparison purposes in determining whether a proposed export value fairly reflects market value, is an improper application of export value. Accordingly, in order to conform future appraisements to the *Baldwin* decision, T.D. 76–118 is amended by this notice in the manner set forth below.
>
> Although the *Baldwin* court held that the use of three of the criteria listed in T.D. 76–118 is improper, it specifically refrained from ruling on the propriety of using the other three factors listed therein, circumstances of sales, relative markups of the importer and exporter, and quantities and level of trade. The Court did state that its ruling did not necessarily preclude establishing an export value for merchandise based on sales to a single selected purchaser if the price fairly reflects the market value of the merchandise. Additionally, the court cited *Spanexico Inc.* v. *United States*, 64 CCPA ——, C.A.D. 1176, 542 F. 2d. 568 (1976), *American Greiner Electronic, Inc.* v. *United States*, 79 Cust. Ct. ——, C.D. 4718, 441 F. Supp. 915 (1977), and *National Carloading Corp.* v. *United States*, 57 Cust. Ct. 758, A.R.D. 215 (1966), as indicating that under the above circumstances, in order to establish that the price fairly reflects the market value, consideration must be given to whether the sales were at arm's length and any evidence showing the relationship between the parties.

In accordance with T.D. 78–344, the importer has submitted additional evidence to substantiate that the subject transactions were negotiated at arm's length and that prices fairly reflected the market value of the merchandise. T.D. 78–344 states:

> Evidence which will be accepted by Customs to prove that a sale was an arm's length transaction and showing the relationship between the parties includes but is not limited to circumstances of sales, relative markups of the importer and exporter, quantities and level of trade, the presence or absence of those costs commonly

referred to as assists, as well as that relating to those factors listed in 19 U.S.C. 1401a(g)(2).

With respect to circumstances of sales, the importer has submitted information to demonstrate that the price paid to the Canadian manufacturer is based upon the price at which the importer is able to sell the merchandise to purchasers in the United States. The importer, a wholesale distributor, resells the subject veneer to plywood manufacturers in the United States in competition with veneer sold by other Canadian manufacturers to the same U.S. plywood manufacturers, or with other wholesalers in the United States selling Canadian or United States veneer. The importer, in seeking to obtain the highest price from its U.S. purchasers, is guided by the prices and market report set forth in a trade letter published in the United States (Crow's Weekly Plywood Pricing Letter). U.S. purchasers also rely upon the trade letter prices in determining the amount they are willing to pay. If these purchasers consider the price to be noncompetitive they may buy direct from suppliers of similar veneer in the Canadian or United States market. If the U.S. customer agrees to the importer's price, an order is placed with the importer who, in turn, conveys the order to the foreign manufacturer.

The importer contends that the manner in which the sales price to its U.S. customers is established indicates that the price the importer pays the Canadian manufacturer is competitive with prices paid by other wholesalers who provide comparative services in terms of sale. To lend further support to this contention, the distribution agreement between the importer and foreign manufacturer states:

> If at any time wholesaler's (the importer) price in terms of sales are not competitive for like volumes, grades and specification as the company's (the foreign manufacturer) veneer, the company shall be entitled to sell its products to others without liability to wholesaler's companies (customers).

It is our opinion that the above evidence indicates that the importer acted as an independent purchaser at wholesale. Moreover, the evidence reveals that the sales or pricing policies of the importer are not controlled by the foreign manufacturer, and that the manufacturer has the right to refuse an order from the importer if the manufacturer believes that the importer's terms are not competitive.

In addition, evidence has been submitted concerning the relative markups of the importer and the exporter. The importer has documented the profits realized on its sales to U.S. purchasers, as well as the higher profits realized by the Canadian manufacturer on the sales of veneer to the importer. After careful review of this evidence, we are of the opinion that there is no persuasive evidence that the profit as reflected in the sales price from the exporter to the importer is not that which would usually be reflected in an arm's length transaction.

In light of the above, we are satisfied that the parties were dealing at arm's length, and that the invoice prices fairly reflect the market value of the merchandise.

Holding.—Based on the evidence of record, *J. L. Wood, supra,* and *D. H. Baldwin, supra,* it is our opinion that the invoice unit values for the subject veneer fairly reflect the market value of the merchandise, and should be used to establish export value under section 402(b), Tariff Act of 1930, as amended.

Our reconsideration of IA No. 111/76 does not alter the findings set forth therein regarding the dutiability of commissions, freight rebates and brokerage fees.

(C.S.D. 79-488)

Classification: Woven Polyethylene Strips as Articles for Tariff Purposes

Date: September 12, 1979
File: CLA-2:R:CV:MC
054789 MH

Re Decision on Application for Further Review of Protest No. 30046-000159.

This decision concerns a protest filed against your decision in the liquidation of the following entries concerning woven polyethylene strips.

Entry No.: 115763.
Entry date: January 5, 1976.
Date of liquidation: September 10, 1976.
Date of protest: October 29, 1976.

Issue.—Whether the merchandise is so advanced in condition as to constitute an article for tariff purposes.

Facts.—The subject merchandise consists of a sheet of woven polyethylene strips which are coated on both surfaces with a clear polyethylene plastic. The strips measure over 0.006 inch in width and are not over 0.001 inch in thickness. The merchandise, a product of Japan, is purchased in 6-foot and 9-foot widths. Prior to importation, the material is spliced according to the specifications provided by the ultimate user. The instant merchandise is used as a greenhouse cover. It is fastened to the greenhouse by means of grommets.

Law and analysis.—The competing provisions of the Tariff Schedules of the United States (TSUS) are as follows:

Classified under:
Schedule 3, Part 7, Subpart B:
Articles not specially provided

	for, of textile materials:	
	Of manmade fibers:	
389.60	Other	25 cents per lb+15% ad valorem
	Claimed under:	
	Schedule 3, Part 4, Subpart C:	
	Woven or knit fabrics (except pile or tufted fabrics), of textile materials, coated or filled with rubber or plastic material, or laminated with sheet rubber or plastics:	
	Of manmade fibers:	
355.82	Other	12.5 cents per lb+15% ad valorem

The precise point at which merchandise can be considered to be advanced beyond the fabric stage is a matter which is not susceptible of any general principle which can be universally applied. Rather, it is a determination which must be made on the basis of the circumstances of the particular case. *J. B. Hendriques, Inc.* v. *United States*, 46 CCPA 54 (1958).

In a recent headquarters ruling letter (HRL 060295), the Customs Service stated that in order to be considered advanced beyond the fabric stage, merchandise must not only be dedicated to use as a specific article of commerce, but its character or identity must be fixed with certainty.

The instant merchandise is specifically constructed for use as a greenhouse cover and must be considered dedicated for such use. In addition, since it is cut to the precise size required by the purchaser, the identity of the merchandise is fixed with certainty. It is thus advanced beyond the fabric stage with tariff purposes.

Holding.—The instant merchandise is classifiable in item 389.60, TSUS, as liquidated. You are therefore directed to deny the protest in full.

(C.S.D. 79-489)

Classification: Textile Label On Man's Shirt As Ornamentation

Date: September 24, 1979
File: CLA-2:R:CV:MC
061322 MH

Re Decision on application for further review of protest No. 5306-8-000035.

This decision concerns a protest filed against your decision in the

liquidation of the following entry, concerning a small textile label affixed to a man's shirt, a product of Korea (presumably the Republic of Korea).

Entry No.: 119227.

Entry date: July 7, 1978.

Date of liquidation: September 22, 1978.

Date of protest: December 20, 1978.

Issue.—Whether the label on the instant shirt renders it ornamented, for tariff purposes.

Facts.—The submitted sample consists of a woven man's shirt. Attached to the lower right edge of the left pocket is a black fabric label measuring 7/16 inch by 1¼ inch. The label consists of the word "redhead" in lowercase block letters. Adjacent to the letters is a small line diagram of a duck. According to the inquirer, the duck, together with the lettering, constitutes the manufacturer's trademark.

Law and analysis.—In Internal Advice No. 134/75, the Customs Service set out general guidelines to be used in determining whether a textile label constitutes ornamentation for tariff purposes. In this ruling we stated that small rectangular shaped textile identifying labels containing only plain writing or plain block printing in an orderly arrangement in locations where such labels are visible do not, in the absence of unusual circumstances, constitute ornamentation. We pointed out that anything done to a label such as adding a border or logogram which is obviously meant to enhance the label will probably cause that label to constitute ornamentation.

Protestant insists that the instant label does not constitute ornamentation under the above test. His reasoning can be summarized as follows:

(1) The plain block letters do not, under the above test. constitute ornamentation.

(2) Thus, it is the drawing of the duck which is at issue.

(3) The drawing of the duck can only constitute ornamentation if intended to enhance the label's appearance or attract the viewer's attention.

(4) The drawing of the duck is not intended either to enhance the label or to attract the viewer's attention, but only for brand identification.

(5) Thus, it does not constitute ornamentation.

It is correct that the plain block letters on the label would probably not themselves constitute ornamentation and, therefore, the drawing of the duck represents the dispositive issue.

In I.A. 134/75 the Customs Service addressed the issue of the relevance of the manufacturer's intent. We stated:

> That the manufacturer's intent * * * may not have been to enhance the appearance of the garment, but rather for the purpose of brand identification is immaterial. The resultant effect, accomplished by the addition of the labels is controlling. *Koscherak* v. *United States*, 98 Fed. 596 (2d Cir. 1899).

Thus, it is the visual effect of the ornamenting feature, rather than the intent of the manufacturer, which forms the basis for the test.

Moreover, the Customs Service has held specifically that the purpose of identifying the manufacturer is not a utilitarian function for purposes of the test in *Blairmoor Knitwear Corp.* v. *United States*, 60 Cust. Ct. 388, C.D. 3396 (1968). See I.A. 134/75.

The drawing of the duck serves to enhance the label and, therefore, the garment to which the label is affixed. It is primarily decorative in function.

Holding.—The label constitutes ornamentation for tariff purposes. You are therefore directed to deny the protest in full.

(C.S.D. 79-490)

Classification: Wax Based Hot Melt Coating Substance; De Minimis Rule

Date: September 26, 1979
File: CLA-2:R:CV:MC
055302 PG

This decision concerns Protest No. 3801-8-000067 filed on February 14, 1978, regarding a certain wax-based hot melt product entered in Detroit, Mich.

Issue.—Whether the wax-based hot melt product is classifiable under the provision for mixtures in whole or in part of any of the products provided for in subpart C, part 1, schedule 4 of the Tariff Schedules of the United States (TSUS), in item 409.00, TSUS, or under the provision for mixtures not specially profided for, in item 432.00, TSUS.

Whether the wax-based hot melt product is classifiable under the provision for articles not specially provided for: of wax: other, in item 792.32, TSUS.

Facts.—The merchandise, imported from Canada, is a wax-based hot melt product. It is a hard waxy mass, and consists of mineral wax (approximately 80 percent by weight), a copolymer of ethylene vinyl acetate, and a synthetic benzenoid compound (5 percent). The benzenoid compound is a reaction product of terpene (a non-benzenoid hydrocarbon) and phenol (a benzenoid product) in the approximate ratio of 1 to 1. According to the protestant, the synthetic

benzenoid compound provides some tackifying properties as an adjunct to one of the wax-based hot melt product's components (a pentaerithytol ester of hydrogenated resin). The subject merchandise is used commercially, according to the protestant, to put a coating of wax on the inside of boxes in order to give the boxes added moisture protection.

The Customs Service, at the port of entry, classified the product under schedule 4, part 1 ("Benzenoid Chemicals and Products"), subpart C ("Finished Organic Chemical Products"), in item 409.00, TSUS, which covers:

> Mixtures in whole or in part of any of the products provided for in this subpart.

The protestant contends that the product should be classified in item 432.00, TSUS, which covers:

> Mixtures not specially provided for.

As the basis of its contention, protestant maintains that the quantity of benzenoid in the product is de minimis, and is not essential to the product's function, per C.D. 4625.

Law and analysis.—As authority for its contentions, protestant cites *Aceto Chemical Co., Inc.* v. *United States*, 75 Cust. Ct. 167, C.D. 4625 (1975), *aff'd*, *United States* v. *Aceto Chemical Co., Inc.*, 64 CCPA 78, C.A.D. 1186 (1977). The court in C.A.D. 1186 clarified the test for determining whether or not a small quantity of benzenoid ingredients in an otherwise nonbenzenoid product was to be considered de minimis. The court found that where the benzenoid ingredient is present in a minute amount, does not play a role in the principal function of the product as a whole, and exhausts its usefulness prior to the performance of the principal function, the benzenoid ingredient falls within the de minimis status. Nevertheless, where the benzenoid ingredient plays a role in the principal function of the product as a whole and does not exhaust its usefulness prior to the performance of the principal function, the court noted that classification of the product under part 1, schedule 4, TSUS, would be proper even though the benzenoid ingredient was not present in a commercially significant amount.

In T.D. 78–120(1978), the Customs Service clarified the decision in C.A.D. 1186, accepting the tests set forth therein, and the application of those tests to the merchandise involved in that case:

> the Customs Service will apply the decision in C.A.D. 1186 to products containing commercially small quantitites of benzenoid ingredients, provided those ingredients either play no part in the principal function of the product as a whole, or exhaust their utility prior to the performance of the principal function. However, as to those products where the commercially small quantities

> of benzenoid ingredients operate continuously or concurrently to assist or enhance the principal function of the product, the Customs Service will continue to classify the product under part 1, schedule 4, TSUS.

Even assuming for the moment that the benzenoid ingredients in the instant case are present in a commercially small quantity, they nonetheless fall outside the de minimis status for tariff classification purposes. The principal function of the wax-based hot melt product is that of a coating. As an adjunct to one of the product's components, the benzenoid compound provides some tackifying properties, thereby operating continuously or concurrently to assist or enhance the principal function of the product as a whole. The benzenoid compound, moreover, does not appear to exhaust its utility prior to the performance of the principal function. Hence, consistent with the aforecited tests, the Customs Service must classify the product at issue under part 1, schedule 4, TSUS.

The wax-based hot melt product would not be classifiable under the provision for articles not specially provided for: of wax: other, in item 792.32, TSUS, since this type of product was never intended to constitute an "article." Item 792.32, TSUS, includes:

> miscellaneous *manufactured articles* of which the component material of chief value is a wax other than beeswax. The Summaries of Trade and Tariff Information, schedule 7, volume 8 (1968) (italic added.)

Holding.—For the foregoing reasons, the wax-based hot melt product is properly classifiable under the provision for mixtures in whole or in part of any of the products provided for in this subpart, in item 409.00, TSUS, dutiable at the rate of 3.5 cents per pound plus 22.5 percent ad valorem. You are therefore directed to deny the protest.

(C.S.D. 79-491)

Classification: Poster Books; Paperbacks Featuring Lithographically Printed Posters

Date: October 2, 1979
File: CLA-2:R:CV:MC
061001 PG

Re Decision on application for further review of protest No. 1001-8-006772.

This decision concerns protest No. 1001-8-006772 filed on May 11, 1978, regarding certain "poster books" entered at New York Seaport.

Issue.—Whether the poster books are classifiable under the provision

for lithographs on paper: Not over 0.020 inch in thickness, in item 274.60, Tariff Schedules of the United States (TSUS), or under the provision for books not especially provided for, in item 270.25, TSUS.

Facts.—The merchandise at issue is printed matter entitled "Posters by Painters" by Evelyn and Leo Farland. The merchandise, printed and bound in Japan, was invoiced as a "poster book." The paperback features 29 reproductions of various posters, a title page, a table of contents, and a two page, general essay on posters. Facing each poster (on the back of the preceding illustration) is a numbered page and a caption giving the name of the artist and exhibition for which it was prepared or its title. A sample was submitted.

The Customs Service, at the port of entry, classified the merchandise in item 274.60, TSUS, which covers:

> Lithographs on paper:
> Not over 0.020 inch in thickness * * *

The protestants agrees that the posters were lithographically printed, but contends that the merchandise should be classified in item 270.25, TSUS, which covers:

> Books not specially provided for * * *

Law and analysis.—Schedule 2, part 5, headnote 2(b), TSUS, defines "books" as follows:

> the term "books" include books, bound
> and not bound, and pamphlets;

The meaning of the term "books," and the scope of item 270.25, TSUS, are further delineated in the "Summaries of Trade and Tariff Information," schedule 2, volume 5 (1970), page 5:

> This summary covers books not elsewhere enumerated, consisting essentially of textual matter produced by any printing process * * * For tariff purposes, a book is two or more sheets of printed matter sewn, glued, or stapled together in the form of a book and opens and reads like a book. Included hereunder are hardbound and paperbound books, such as textbooks, school workbooks, educational texts, and related printed instructional materials; encyclopedias and other reference books; religious books including Bibles and prayer books; and other books of fiction or nonfiction. This summary does not include * * * pictorial matter * * *

Consistent with the foregoing citation, the Customs Court has demanded that a plaintiff prove that his alleged "book" consists "essentially of textual matter." *Los Angeles Tile Jobbers* v. *United States*, 63 Cust. Ct. 398, 406, C.D. 3925 (1969). Protestant contends that this requirement is no longer applicable, in view of the revision

of the pertinent Tariff Schedule provisions subsequent to Public Law 89–651 (effective February 1, 1967), the legislation which gave effect to the Agreement on the Importation of Educational, Scientific and Cultural Materials (the Florence Agreement), 17 U.S.T. 1835 (1966).

Protestant's contention, however, is incorrect, particularly in view of headquarters ruling SP 012a, dated March 3, 1967:

> Your letter dated February 14, 1967, is concerned with the tariff treatment accorded books and printed matter under the provisions of the Tariff Schedules of the United States (TSUS), as modified by the recent legislation implementing the Florence Agreement * * *. You suggest that the new tariff provisions for duty-free entry of books do not include books which are "essentially" pictorial matter. Such books are classifiable under items 274.50 through 274.70. In general, if the pictorial matter is illustative of the text, the books are considered to be essentially of textual matter. On the other hand, if the text does little more than identify the pictures, the book is essentially of pictorial matter. Children's books, in which there is relatively little text expressing a story idea and a large amount of illustrations, are free of duty under the provision for books not specially provided for, in item 270.25, TSUS.

The printed matter at issue consists of 29 lithographs with minimal text. The text, on the whole, does little more than identify the lithographs. Hence, the merchandise is essentially pictorial matter, falling outside the scope of item 270.25, TSUS. The protestant has not proven that its alleged "book" consists essentially of textual matter. Inasmuch as the merchandise at issue consists of lithographs on paper, not over 0.020 inch in thickness, classification in item 274.60, TSUS, is correct.

The foregoing conclusions are reinforced by other evidence which underscores the essentially pictorial nature of this merchandise. In its written submission, the protestant acknowledges that "As with the majority of the art books, the illustrative material is the prime focus of the book and the basic reason it is purchased." The protestant further acknowledges the "possibility" that a particular reproduction may be removed from the work, "a fate of all art books." This "fate" is more than a possibility—and seems to be the unique reason for purchasing this work. The work's cover describes the posters as "Suitable for Framing," and the short general essay on posters concludes with the message: "Happy Walls!" Clearly the merchandise is essentially pictorial matter.

Holding.—For the foregoing reasons, the subject merchandise is properly classifiable under the provision for lithographs on paper: Not over 0.020 inch in thickness, in item 274.60, TSUS, dutiable at the rate of 6 cents per pound. You are therefore directed to deny the protest.

(C.S.D. 79-492)

Classification: Sheath/Sock System To Be Used With Prosthetic Devices

Date: October 2, 1979
File: CLA-2:R:CV:MC
061263 BB

Re Decision on application for further review of protest No. 3501-8-0000025 concerning a sheath/sock system to be used with prosthetic devices.

Entry No.: 108994.
Date: March 31, 1978.
Date of liquidation: April 21, 1978.
Date of protest: July 18, 1978.

Issue.—Whether the components of the subject sheath/sock system are properly classified as "other prosthetic articles," in item 709.57, Tariff Schedules of the United States (TSUS).

Facts.—There are three components in this sheath/sock system. The first sample is stated to be a knit prosthetic sheath of manmade fibers. The sheath is approximately 18 inches long, 8½ inches in diameter at its open end, tapered, and rounded off at the closed end. There is an elastic band and a tie string along the edge of the opening. It is stated that the sheath is designed to be worn as a cover for a severed limb and serves to prevent skin problems attributed to perspiration and friction between the stump and the prosthesis.

The second sample is a knit prosthetic sock which is also approximately 18 inches long, 9½ inches in diameter at its open end, tapered, and rounded off at the closed end. The inside of the sock is made of wool and the outside of synthetic fibers. Laboratory analysis reveals the sock's composition, by weight, to be 31.5 percent wool, 41.4 percent nylon, and 27.1 percent acrylic. The figures submitted by the importer indicate the sample is in chief value of wool. It is stated that the sock is designed to act as a buffer between the sheath and the prosthesis, to provide comfort and to absorb perspiration.

Third sample is a 9 by 11 inch net rectangular bag which is stated to be of manmade fibers. The sample is described as a special washing bag which protects the sheath and sock from the rough treatment of a washing machine.

Law and analysis.—The samples were classified as follows:

Schedule 3, part 7, subpart B:
Textile articles not specially provided for other articles, not ornamented:

(Sheath)	Of man-made fibers:	
389.40	Knit (except pile or tufted construction)	25¢ per lb. + 25% ad val.
	* * * * * * *	
(Sock)	Of wool:	
388.20	Knit (except pile or tufted construction):	
	Valued over $5 per pound	37.5¢ per lb. plus 10% ad val.
(Bag)		considered "packing" dutiable, under General Headnote 6 (b)(i), TSUS, at the same rate as the contents of the container.

The samples are claimed to be classifiable as follows:

	Schedule 7, Part 2, Subpart B: Medical and Surgical Instruments and Apparatus; X-Ray Apparatus	
	Orthopedic appliances, surgical belts, trusses, and similar articles; artificial limbs, eyes, teeth, and other prosthetic articles; splints and other fracture appliances:	
	(sheath, sock, and bag)	
709.57	Other	10% ad val.

The importer contends that the components of this sheath/sock system should be considered "other prosthetic articles" classifiable in item 709.57, TSUS.

Customs has ruled that stump socks alone are not classifiable in item 709.57, *See* headquarters' ruling letter (HRL) 034007, dated September 12, 1974, and has also ruled that this sheath/sock system is not within the purview of item 709.57, TSUS. See HRL 053188, dated March 14, 1978, and HRL 058226, dated May 2, 1978. The basis for headquarters' position is that an "other prosthetic article", in item 709.57, TSUS, must be ejusdem generis with the named prostheses: artificial limbs, eyes and teeth, that is, the article must be an instrument or appliance which replaces a missing part of the body.

After our ruling that this sheath/sock system was not classifiable in item 709.57, TSUS, the importer submitted additional information

along with this protest to establish that the sheath/sock system does, in fact, replace a missing part of the body. This evidence consists of two documents. The first is a letter, dated May 30, 1978, from (name), president of the American Orthotic and Prosthetic Association. The letter states that a good fit between the socket of the prosthetic device and the stump of the severed limb is important and that the sheath/sock system in question makes such a fit possible "by creating a compact mass of flesh-tissue which does not move or take different positions during the donning into the socket."

Next, the letter states that because the stump may vary in size from day to day, the use of different thicknesses of socks allows the amputee to recreate the exact volume of the stump when the prosthetic socket was made, thereby insuring a good fit.

Finally, the latter states it is important that the stump not move within the socket while the amputee is walking (pumping action) because this leads to excessive perspiration and abrasion of the stump. The sheath sock system minimizes this problem, again, by creating a better fit for the device.

The second document submitted by petitioner is a copy of a memorandum, dated December 22, 1976, from a technical specialist to an assistant director of the Veterans' Administration. The memo discusses the results of a test of petitioner's sheath/sock system conducted with 15 amputees who had previously worn stump socks without sheaths. The study concluded that the system reduced irritations, abrasions, and stump perspiration, but that it did not improve circulation or give protection against excessive heat or cold, as also claimed. The study also notes that the nylon sheath had a tendency to develop runs easily.

Based upon this evidence, petitioner argues that the sheath/sock system replaces missing flesh within the socket of the prosthesis by creating a constant mass of tissue and, therefore, it is properly considered an "other prosthetic article."

We do not agree. The evidence submitted only establishes that the sheath/sock system apparently provides a more proper and comfortable fit for a prosthesis than use of a conventional stump sock. It does not establish that the sheath/sock system is so different in function from a conventional stump sock that it more closely resembles the prosthesis itself. Providing volumetric compensation for residual limb variations and limiting pumping action of the residual limb within the socket are simply other ways of saying that the system makes a prosthesis comfortable to wear. The same is true of a liner for a denture or a conventional stump sock for a prosthesis. Yet the liner is not classifiable as part of a dental instrument (see T.D. 74–98 (30)), and the stump sock is not classified as part of a prosthesis (see HRL

034007). The prosthesis itself, not the sheath system, replaces missing flesh. Accordingly, petitioner has failed to establish that the sheath/sock system is an "other prosthetic article" for tariff purposes.

Petitioner also cites T.D. 76–133(3) where surgical stockings were classified in item 709.59, TSUS, to support his argument. This decision is inapposite, however, since at issue there, was whether a surgical stocking could be included under the language "surgical belts, trusses and similar articles," not an interpretation of the phrase other prosthetic articles."

Having established that petitioner's claimed classification in item 709.57, TSUS, is incorrect, we now consider whether the position taken in HRL 053188 dated March 14, 1978, should be modified. HRL 053188 was issued in response to a request for ruling on this same sheath/sock system. In that letter, headquarters ruled that the sheath, which was described as being of "net" construction, was properly classified as an article of wearing apparel, in item 382.04, TSUS. Subsequently, it was determined that the sheath was not, in fact, of net construction. HRL 051388 also classified the wool sock as an article of wearing apparel, in item 382.58, TSUS. The net washing bag was classified as an article of textile material not specially provided for, in item 386.08, TSUS. Prior to the issuance of HRL 053188 the sheaths and socks were classified as articles of textile material not specially provided for, while the net washing bags were considered "packing" and their value was added to the other merchandise in the container, under general headnote 6(b)(i), TSUS.

The decision to classify the sheath and sock as "wearing apparel" was based on the case of *Antonio Pompeo* v. *United States*, 40 Cust. Ct. 362, C.D. 2006 (1958). In that decision the court held that a motorcycle crash helmet was not "wearing apparel" for tariff purposes, stating that the term "wearing apparel" includes any articles worn by human beings for reasons of decency, comfort or adornment, but does not include articles worn as a protection against the hazards of a game, sport or occupation, or the prevention of injury. *Antonio Pompeo* v. *United States*, *supra*, at 366. Since the sheath/sock system is worn for comfort, and headquarters had previously ruled that regular stump socks were articles of wearing apparel (see HRL 034007) the sheath/sock system was also classified as such.

The additional information submitted by petitioner with this protest provides no basis for altering this position. Moreover, in its most recent pronouncement on the meaning of "wearing apparel" the Customs Court broadened the definition and restricted the exceptions that had been carved out in *Antonio Pompeo*. See *Admiral Craft Equipment Corp.* v. *United States*, — Cust. Ct. —, C.D. 4796 (1979).

Holding.—Accordingly, on future entries this merchandise should be classified as follows: The sheaths are properly classifiable under the provision for other women's, girls' or infants' wearing apparel, not ornamented: Of manmade fibers: Knit, in item 382.78, TSUS, dutiable as a product of France, at the column 1 rate of 25 cents per pound plus 32.5 percent ad valorem. The socks are properly classifiable under the provision for other women's, girls', or infants' wearing apparel, not ornamented: Of wool: Knit: Other: Valued over $5 per pound: Other, in item 382.58, TSUS, dutiable as a product of France, at the column 1 rate of 37.5 cents per pound plus 20 percent ad valorem. The washing bags are properly classifiable under the provision for other net articles, not specially provided for, of textile materials: Other, in item 386.09, TSUS, dutiable, as a product of France, at the column 1 rate of 25 percent ad valorem. We note that item 386.09, is the successor of item 386.08, the provision under which these bags were classified in HRL 053188.

As the above described classification would result in the imposition of duties which are higher than or equal to the duties assessed in the liquidation of the entries subject to protest, you are hereby directed to deny the protest in full.

To the extent this decision is inconsistent with HRL 053188, that ruling letter is modified accordingly, pursuant to section 177.9(d), Customs Regulations (19 CFR 177.9(d)).

(C.S.D. 79-493)

Vessel Repair: Fishing Nets Purchased in a Foreign Port

Date: October 15, 1979
File: VES-13-18-R:CD:C
104206 JL

This ruling concerns a request for advice on the dutiability under the vessel repair statute of fishing nets purchased in a foreign country.

Issue.—When equipment purchased in a foreign port by the owner of an American fishing vessel is transported to the United States on the vessel, rather than on a land carrier as planned, is the equipment subject to entry as imported merchandise or is it subject to duty under the vessel repair statute?

Facts.—The vessel at issue, an American fishing vessel, ordered two Polish rope trawls (nets) on October 20, 1978, from a company in Quebec for delivery in British Columbia. The vessel sailed to Stevenston, British Columbia, where the nets were loaded on June 9, 1979. Upon the vessel's arrival in Astoria, Oreg., on June 10, the nets were declared and Customs required the master to make a vessel repair

entry. The master's position is that the voyage was unplanned in that the nets would have been delivered by truck in the United States but a strike prevented that mode of transportation from being utilized. The master also notes that the type of net supplied is not available in the United States insofar as material and technical workmanship is concerned because "this is a pioneer effort in the fishery that will be started out June 1, 1979, as an offshoot of the FCMA of 1976, the 200-mile law and previous to this there has been no need for this type of gear in the American fishery." The master notes that the duty would be lower under the Tariff Schedules of the United States for the nets than under the vessel repair statute.

The Regional Commissioner's position is that section 4.15 of the Customs Regulations requires that the nets be declared and entered under 19 U.S.C. 1466, and "that if CIE 429/61 applies in this case, no relief from duty can be granted."

Law and analysis.—Section 4.15(a), Customs Regulations, states in part as follows:

> When a fishing vessel departs from the United States and there is an intent to stop at a foreign port (1) to lade vessel equipment which was preordered, (2) to purchase and lade vessel equipment, or (3) to purchase and lade vessel equipment to replace existing vessel equipment, the master of the vessel must either clear for that foreign port or obtain a permit to touch and trade, whether or not the vessel will engage in fishing on that voyage * * *.

Footnote 28 of section 4.15(a) states in part as follows:

> Fish nets and netting are considered vessel equipment and not vessel supplies.

Section 4.15 continues:

> Purchases of such equipment, whether intended at the time of departure or not, are subject to declaration, entry, and payment of duty pursuant to section 466 of the Tariff Act of 1930, as amended (19 U.S.C. 1466). The duty may be remitted if it is established that the purchases resulted from stress of weather or other casualty.

Applying the above to the facts in this case, the netting is obviously dutiable under the vessel repair statute as it is considered preordered vessel equipment. It is true that the netting, if regularly imported either as cargo on another vessel or as merchandise imported by way of a land carrier, would have been dutiable under the Tariff Schedules of the United States rather than under the vessel repair statute. The fact that a land carrier was not available does not provide a basis for relief under the statue. 19 U.S.C. 1466 provides for remission of duties only when a casualty is shown to have precipitated the purchase of the equipment.

The file does not disclose whether the subject vessel was enrolled, or enrolled and licensed, to engage in the fisheries or whether it was

307-462—79——8

operating under a register. Inasmuch as the fishing vessel clearly had an intent to stop at a foreign port to lade the netting which was preordered, pursuant to section 4.15(a) and 46 U.S.C. 310, it was required to either clear for that foreign port or obtain from the district director a permit on Customs form 1379 to touch and trade.

Holding.—1. When an American fishing vessel lades equipment which is preordered at a foreign port, it is subject to declaration and entry under 19 U.S.C. 1466 upon its arrival in the United States. Neither the fact that no other carrier was available to transport the equipment to this country due to a strike, nor that a change in certain laws regarding the fisheries obviated the need for that equipment, will qualify the purchase for remission under 19 U.S.C. 1466.

2. Vessel equipment purchased under the facts presented would not be subject to declaration and entry under the Tariff Schedules of the United States upon the vessel's arrival in an American port provided it is retained on board. If it is landed and delivered, it is subject to entry and dutiable under the Tariff Schedules of the United States pursuant to 19 U.S.C. 1446 in addition to any duties imposed under 19 U.S.C. 1466.

(C.S.D. 79–494)

Classification: Steam Turbine Used as Starter Engine for Gas Turbine

Date: July 1, 1979
File: CLA-2:R:CV:MA
061251 E

Mr. John F. Chilton,
District Director of Customs,
Buffalo, N.Y.

Dear Mr. Chilton: In I.A. 33/79, you request advice as to whether a steam turbine used as a "starter" engine for a gas turbine and imported therewith is separately classified or classifiable as an entirety. The following ruling sets forth our views in the matter.

Facts.—The merchandise is designated as a CW 352 RM/37(S) two-shaft industrial regenerative gas turbine weighing 195,000 pounds, a product of Canada. Typical gas turbine configuration consists of a compressor section, combustion chamber, and power turbine section integrated into a single functional unit. The compressor section supplies compressed air to the combustion chamber where fuel is burned and combustion heat is added to the air. This mixture is then delivered to the power turbine where the heat energy of the expanding hot gas is absorbed and converted into mechanical energy in the form

of a rotating shaft which supplies power to the unit's compressor section. The regenerative cycle differs from simple-cycle units in that it features a regenerator section where heat recovered from the turbine exhaust is transferred to the compressed air before it enters the combustion chamber, thus increasing the unit's efficiency.

It is contended by the Canadian manufacturer that all gas turbines require some form of starting mechanism such as a diesel engine, electric motor, gas expander, or in this instance, a steam turbine. Much like the familiar internal combustion gasoline engine, the gas turbine is not self-starting and requires an ancillary starting medium to reach an operating speed from point of rest. Specifically, the manufacturer points out that the gas turbine must be rotated to a certain speed so that the compressor can supply the correct amount of air, and only then can the fuel be ignited and the turbine operate. The steam turbine in this importation is mounted in line with the gas turbine and on the same bedplate, that is, they have a common base.

Issue.—The issue is whether an industrial gas turbine imported with its starting mechanism, a steam expansion turbine, is classifiable as an entirety under the provision for internal combustion engines, nonpiston type, in item 660.46, TSUS, or whether the industrial gas turbine excluding the steam expansion turbine is classifiable under the provision for internal combustion engines, nonpiston type, in item 660.46, TSUS, and the steam expansion turbine classifiable under the provision for steam turbines in item 660.30, TSUS. Simply stated, the question is whether the shipment constitutes an entirety.

Law and analysis.—Judicial definitions of "entirety" as a tariff term are formulated to decide particular cases and each is necessarily addressed to one set of facts. In a leading case it was said that "if an importer brings into the country, at the same time, certain parts, which are designed to form, when joined or attached together, a complete article of commerce, and when it is further shown that the importer intends to so use them, these parts will be considered for tariff purposes as entities, even though they may be attached or enclosed in separate packages, and even though said parts might have a commercial value and be salable separately." *Altman & Co.* v. *United States*, 13 CCA 315, T.D. 41232 (1925). This doctrine, was amplified in *Donalds Ltd., Inc.* v. *United States*, 32 Cust. Ct. 310, C.D. 1619 (1954), to the following:

> If what is imported as a unit is actually and commercially two or more individual entities which, even though imported joined or assembled together, nevertheless, retain their individual identities and are not subordinated to the identity of the combination, duties will be imposed upon the individual entities in the combination as though they had been imported separately. Conversely, if there are imported in one importation separate en-

> tities, which by their nature are obviously intended to be used as a unit, or to be joined together by mere assembly, and in such use or joining the individual identities of the separate entities are subordinated to the identity of the combined entity, duty will be imposed upon the entity they represent.

Also relevant in this case is the so-called "more than" doctrine (See *The Englishtown Corporation* v. *The United States*, 64 CCPA 84, C.A.D. 1187, (1977)), which poses the question as to whether the provision for internal combustion engines, nonpiston type, in item 660.46, TSUS, covers the importation.

In *United States* v. *Howard Hartry, Inc.*, 60 CCPA 140, C.A.D. 1099 (1973), the court had before it certain marine engines with reverse and reduction gears. After reviewing prior decisions, the court stated: * * * In each of those cases a basic engine, specifically an electric motor, was modified by the addition of components not essential to a basic engine. * * *"

Applying the facts in the instant case to the foregoing principles, we find that the steam turbine was imported with and is essential to the operation of the gas turbine. The facts also show that it is not necessary that a steam turbine be used as the starting engine, but that some kind of starting engine is essential. Under these circumstances, the element of essentiality is satisfied. The starting steam turbine and a gas turbine are separate entities, but in the importation under consideration they have been placed on the same bedplate, and in the joining, their separate entities are subordinated to the identity of a combined entity, to wit, a gas turbine.

Holding.—The importation should be classified as an entirety under the provisions of item 660.46, TSUS.

The importer should be informed of this decision and may be furnished a copy of this ruling.

(C.S.D. 79–495)

Classification: Whether Certain Glass Frit Is Ground or Pulverized

Date: June 18, 1979
File: CLA-2:R:CV:MSP
049856 LLB

AREA DIRECTOR OF CUSTOMS,
Laredo, Tex.

DEAR SIR: In your July 30, 1976, request for internal advice (IA 116/76), you asked that we ascertain the tariff classification of glass frit. This request was made on behalf of the attorneys for the importer.

At issue, is whether the frit is properly classified as entered under

item 540.21, Tariff Schedules of the United States (TSUS), or under 540.27, TSUS.

Item 540.21, TSUS, provides for enamels, colors, glazes, and fluxes of glass frit or calcine which are ground or pulverized. Item 540.27, TSUS, provides for these materials which are not ground or pulverized.

The glass frit made before August 1977, is imported in the form of grains, pebbles, and string-like pieces, and is manufactured as follows:

> Molten glass is poured from a smelter into a water bath. The sudden quenching shatters the glass. The shattered frit is then placed in a stainless steel tumbling and flash dryer mill which dries and tumbles the shattered particles, after which the frit is bagged.

A report on the physical properties of the frit, some samples, and photographs which illustrate the process were submitted. Of the samples, exhibit 5 is labeled "Samples of Glass Frit, Ground or Pulverized by Quenching and Tumbling," and it consists of two bags of frit of various sizes. In a report received, it was noted that the average screen size of this frit is minus 5 to plus 40 mesh. There seem to be no string-like pieces of frit in the bags of frit in exhibit 5. Similar samples, it is noted, contain a variety of needle-like fragments approximately 3 inches long.

Attorneys for the importer contend that this frit is properly classified under item 540.21, TSUS, as ground or pulverized, for three major reasons. One, dictionary definitions of the words ground and pulverized support their contention that this is ground or pulverized as that phrase is used in item 540.21, TSUS. Two, this frit is considered to be ground or pulverized by the U.S. trade and this fact is relevant as to the meaning of ground or pulverized in item 540.21, TSUS. Three, ORR Ruling 191–69, abstracted as T.D. 69–77(8), classified as ground or pulverized frit which is indistinguishable from this material.

Additionally, *Froman & Levy* v. *United States*, 53 Treas. Dec. 834, Abstract No. 4845 (1928), and *United States* v. *J. P. Reiss Co.*, T.D. 43663, T.D. 44373 were cited as authority that this frit is ground.

As to reason one, while the attorneys submit that the phrase ground or pulverized in item 540.21, TSUS, does not require the material to be reduced to a powder, they cite Webster's New International Dictionary of the English language, second edition, unabridged 1935, in which grind is defined as: "To reduce to powder by friction as in a mill, or with the teeth; to crush into small fragments; also, to produce by or as by the action of millstones." Funk & Wagnalls defines grind as "To reduce or be reduced to very fine particles, expecially a fine powder or dust as by heating, grinding, or the like." Additionally, Webster's New World Dictionary defines friction as: "A rubbing,

especially of one object against another." Nowhere in the description of the manufacturing process of the frit is there a rubbing to reduce the size of the frit. The same dictionary defines crush as "To press between two opposing forces so as to break or injure, put out of shape or condition by pressure; squeeze together; crumple. To press, grind, or pound into small particles or into powder."

Powder, for the purpose of T.D. 56295(5), consisted of garnet finer than 325 mesh. Nowhere in the description of the manufacturing process is there any mention of a pressing between two opposing forces, or a squeezing or exertion of pressure. While the long slivers of frit may be broken as an incidence of being dried in a flash dryer, this is merely incidental to the drying of the frit. This does not reduce the size of any of the frit except for these string-like slivers. It should also be noted that no processing beyond the quenching and drying of the frit is done. Neither the quenching nor the drying is done to reduce the size of the frit. For these reasons, this first reason is not determinative of and does not resolve the issue of classification of this frit.

As to reason two, that this material is ground or pulverized as this phrase is understood by the U.S. trade, and thus is ground or pulverized as this phrase is used in item 540.21, TSUS, attorneys have stated, in a November 26, 1976, letter, "We are informed by our client that the material exported to the United States by (the importer) is dealt with in the trade and commerce of Mexico and the United States as glass frit, *ground or pulverized* * * *" No other information has been submitted to substantiate this contention. Nor is any authority cited from a disinterested source as to what the U.S. trade considers the characteristics of ground or pulverized to be.

In a January 16, 1978, submission it is contended that ground or pulverized refers to all which is not in flake form, and that it is not necessary that this be reduced to a fine mesh size.

A technical report received states that in the trade, the phrase ground or pulverized is interpreted by resort to the meaning placed upon the words ground and pulverized. In this report it was stated that ground (grinding) means reducing quenched frit in size by some mechanical means, usually ball milling, to create a fine mesh size. Additionally, it is stated that in the trade, pulverized refers to ground frit caked together which is separated. There is no submission by the attorneys which includes a description of the method of manufacture of this frit in which particles are either caked together, or once caked, are separated. Nor is there any reference to ball milling in which more than 50 percent of the frit is reduced to a fine mesh size. In this report, it is stated that information was received from three trade sources. Other references cited were Child, Frank S., "The Versatility of Glass

Frit". *American Glass Review*, February 1976, and *Kirk-Othmer Encyclopedia of Chemical Technology*, editor, Standen, Anthony, 2d edition, vol. 8 (1965), pp. 157–158.

Thus this frit for the reasons cited is not by the force of this second contention classified under item 540.21, TSUS.

The third contention stated is that three cases, T.D. 69–77(8), *Froman & Levy* v. *United States*, 53 Treas. Dec. 834, and *United States* v. *J. P. Reiss Co.*, 18 CCPA 159, T.D. 44373, support the view that this frit is ground or pulverized, partly because the frit which is the subject of T.D. 69–77(8) is indistinguishable from that which is the subject of this request for internal advice.

In T.D. 69–77(8), materials of an average screen size of minus 20 to plus 35 were classified under item 540.21, TSUS, a provision which provides for glazes or enamels which are ground or pulverized. The average screen size of the sample frit submitted by the importer is not as fine. This is a frit which contains larger pieces than that which was classified under item 540.21, TSUS, in T.D. 69–77(8). The frit which was the subject to T.D. 69–77(8) is not described as containing large string-like pieces. This sample had such pieces. Additionally, while the frit which is the subject of T.D. 69–771(8), was not ground in the sense of using friction or a crushing motion to reduce the size of the frit, after it was quenched, it was screened to reduce the size of the frit. The frit submitted by the importer is not screened, nor is it further processed in any way, it is only quenched. For these reasons, T.D. 69–77(8) does not support the contention that this material is ground or pulverized.

Froman & Levy, Treas. Dec. 834, indicates that frostings do not have to be in powder form to be ground. In it, frostings which "resemble fine granulated sugar or sand rather than powder" were determined to be properly classified under paragraph 231, Tariff Act of 1922. This decision does not indicate whether this frosting is reduced in size by the use of friction or a crushing motion. It also does not indicate the size of it or its commercial use. Furthermore, in T.D. 44373 it is stated:

> In the Froman & Levy case, there was no evidence as to the method of manufacture of use of the article, and we are at a loss to understand how the Customs Court was able to find from any testimony there given that the "frostings in this case are ground."

Thus, while *Froman & Levy* was not overruled, it was questioned. Under these circumstances this case has very little value as precedent.

In *Reiss*, crystal ballotini, produced by passing crushed glass through a heated tower so that this glass becomes globular, was not considered to be ground or pulversized. The contention is raised that but for the fact that this was passed through a heated tower, this glass is ground and pulverized, and thus the frit is ground or pulverized.

There appears to be no language in *Reiss* that would suggest that the crushed ballotini is ground or pulverized.

There are, however, several decisions in which the term ground has been defined for the purpose of various TSUS item numbers. In C.I.E. 806/66, abstracted as T.D. 56535(81), glass frit which consists of glass particles ranging in size from 1½ inches to fines of glass quenched in cold water was classified under item 540.27, TSUS. Glass frit which is neither ground nor pulverized is properly classified under item 540.27, TSUS. C.I.E. 213/66, abstracted as T.D. 56521(14), is also noteworthy for the purpose of classifying this frit. In it, five samples of Greek barite of the particle size minus one-half inch to plus 200 mesh were classified under item 472.10, TSUS. Crude, natural barium sulfates are classified under item 472.10, TSUS: Ground natural barium sulfates are classified under item 472.12, TSUS. In this decision it was held that the barium sulfate, although reduced in size, was not reduced so far as to be suitable for use in the production of oil well drilling mud, the chief use of the ground barium sulfate. This C.I.E. further provides, "The American Petroleum Institute specifications for ground barium sulfate for this use require that it be so finely ground that at least 97 percent will pass through a 200-mesh screen."

The cited case is similar to the present one. Here also, the size of the material is not as fine as that which is accepted by the U.S. trade as ground. C.I.E. 806/66, in which glass particles ranging in size from 1½ inches to fines were also considered not to be ground, is perhaps even more relevant, because it concerns the two competing tariff provisions (items 540.21 and 540.27, TSUS) which are concerned here. Item 540.21, TSUS, provides for frit which is ground or pulverized. Item 540.27 provides for frit which is not ground or pulverized. The frit which was the subject of C.I.E. 806/66 was not processed beyond quenching.

Your request for internal advice concerns frit which is similar to that classified in C.I.E. 806/66 in two respects; it has not been further processed after quenching to reduce the size of the frit, and it contains pieces of frit which are larger than defined as "ground" in the industry. Additionally, the largest pieces of frit are larger than that which was not considered to be ground or pulverized and larger than that classified in T.D. 69–77(8) under item 540.21, TSUS.

For all of these reasons, we are of the opinion that this frit is not properly classified under item 540.21, TSUS, and is properly classified under item 540.27, TSUS, dutiable at 34 percent ad valorem.

It is also requested by the importer that any shipments which are not considered to be ground or pulverized should be regarded as commingled, and notice and an opportunity to establish that the

amount of slivers present is commercially negligible, pursuant to general headnote 7, TSUS, should then be given to the importer.

For general headnote 7, TSUS, to be applicable, two or more classes of articles must be packed together or commingled. This case does not concern two or more separate classes of articles packed together. Rather, the subject matter of this case is glass frit, a fungible product. Because this frit is not composed of two separate articles, general headnote 7 is inapplicable.

Thus, we are of the opinion that none of this frit is properly regarded as commingled.

(C.S.D. 79-496)

Classification: Glass Panels and Steel Frames Used With Artificial and Natural Illumination

Date: June 22, 1979
File: CLA-2:R:CV:MSP
061392 FJD

DISTRICT DIRECTOR OF CUSTOMS,
Minneapolis, Minn.

Re Decision on further review of protest No. 3501-8-000051, dated December 15, 1978, concerning glass panels and their steel frames used in illuminating decorative capitals.

DEAR:

Issues.—The issues are (1) whether the glass panels are classifiable under the provision for other illuminating articles and parts thereof, of glass, in item 545.67, Tariff Schedules of the United States (TSUS), or under the provision for other glass (including cast, rolled, drawn), etc., in item 544.18, TSUS, and (2) whether the steel frames which hold the glass are classifiable under the provision for other illuminating articles and parts thereof, of base metal, in item 653.39, TSUS, or under the provision for other articles of iron or steel, not coated or plated with precious metal, in item 657.25, TSUS.

Facts.—The articles in question are separately imported, and may be described as follows: the glass panels are 8-inch pieces, which are arranged in seven rows about the top of a column, thus forming what might be described as having the appearance of a capital. The glass panels are held in place by steel frames. The glass panels were described by the importer as clear, but having a handmade relief in order to accentuate the refraction of light. The importer also states that with no artificial illumination shining upon them, the glass panels have decorative and artistic qualities and reflect light. In addition to being

illuminated by the natural light of day, the glass panel and frame arrangement is illuminated internally by means of artificial light sources, giving it the appearance of a chandelier.

The importer asserts that the glass panels and their frames are not classifiable as illuminating articles, saying that the glass panels and frames are merely structural pieces assembled together to provide a decorative capital, that those panels and frames were not originally intended to be parts of any illuminating article, and that the panels and frames are not integral parts of the light sources which have been installed.

The Customs investigative report reveals that while the imported articles and the actual light sources may be architecturally separate, the fact remains that the column capitals were finally designed with an internal illuminating system meant to shine on the glass and create an ornamental illumination effect.

Law and analysis.—We note at the outset that the doctrine of entireties does not apply where, as in this situation, articles even though destined for use in combination, are not imported together. *See*, Sturm, *A Manual of Customs Law* 289 (1976), and citations therein.

The superior heading to the provision for other illuminating articles in item 545.67, TSUS, reads as follows:

> Illuminating articles for use in the household or elsewhere in connection with artificial illumination (except candle, illumination) in such manner as to pass, reflect, refract, disperse, color, or otherwise affect the light for practical or ornamental purposes; articles which reflect or color artificial light directed on them for use as, or in connection with, signs or signals; and parts of any of the foregoing articles; any of the foregoing, of glass, and not optically worked:

This language could not more precisely describe the articles in question. The glass panels in question are glass parts of illuminating articles used "elsewhere" besides in the household; they are undeniably used "in connection with artificial illumination"; they are also used "in such a manner as to pass, reflect, refract, disperse * * * or otherwise affect the light"; and finally, they are used for an "ornamental purpose". That the articles also serve a decorative purpose when illuminated only by natural, as opposed to artificial light, is not determinative of the classification issue. The tariff provision makes no requirement that illuminating articles must be constantly lit by artificial light sources, or be such that they themselves generate light. *See*, *Solomon & Sons* v. *United States*, 48 Ct. Cust. Appls. 561, 565, T.D. 41256 (1925). According to the court in *Solomon*, *supra*, the character or extent of illumination furnished by an article is not a proper test of whether an article is an illuminating article; rather, the proper test is whether the article is chiefly used in connection with artificial

illumination in such a manner as to pass, reflect, disperse or otherwise affect the light for either practical or ornamental purposes. This test is satisfied here, and it is clear that these glass panels are of a type chiefly used in connection with artificial illumination. *See also*, T.D. 66-99(14) (1966).

The classification of the glass articles is similar to the classification of the metal frames. Since the glass articles are parts of illuminating articles, it follows that the metal frames which support the glass illuminating articles are also parts of illuminating articles. Furthermore, Customs has earlier so classified such merchandise, *see, e.g.*, files 037944 E, of February 28, 1975, and 049298, of February 25, 1977.

In the case of both the glass pieces and their frames, it may be argued that they are provided for in items 544.18 and 657.25, TSUS, and as well as in the competitive provisions of items 545.67 and 653.39, TSUS, respectively. In both instances, the principle of relative specificity indicates that where an article is described in more than one item, it is to be classified under the provision which most specifically describes it. *See, United States* v. *Simon Saw & Steel Co.*, 51 C.C.P.A. 33, C.A.D. 834 (1964). *See also*, General Interpretative Rule 10, TSUS. A designation by specific use, such as illuminating articles, prevails over a designation for a general character, such as articles of glass or of steel. *See, Sturm, supra* at 246, and citations therein.

Conclusion.—Both the articles involved are illuminating articles. The glass panels are classifiable under the provision for other illuminating articles and parts thereof, of glass, in item 545.67, TSUS, with duty at the rate of 12.5 percent ad valorem, and the steel frames are classifiable under the provision for other illuminating articles and parts thereof of base metal, in item 653.39, TSUS, with duty at the rate of 19 percent ad valorem.

Accordingly, the protest should be denied in full.

(C.S.D. 79-497)

Duty Assessment: Imported Merchandise Exported and Then Reimported

Date: June 25, 1979
File: CLA-2:R:CV:MSP
061252 HDB

AREA DIRECTOR OF CUSTOMS,
New York Seaport,
New York, N.Y.

DEAR SIR: This ruling concerns your April 13, 1979, request for internal advice on the dutiable status of certain imported merchandise

subsequently exported to Bermuda and then reimported (IA No. 63/79).

Issue.—Whether the merchandise in question, certain hospital supplies, is eligible for duty-free entry under either item 802.10, or 802.30, TSUS.

Facts.—Hospital supplies were imported, duty paid, and subsequently exported to Bermuda by the importer for a company sales meeting. The meeting involved evaluation, study, and demonstration of the supplies by the importer's own staff. There was no solicitation of orders.

Law and analysis.—Part 1 headnotes to schedule 8, Tariff Schedules of the United States, specifically state that the tariff status of an article is not affected by the fact of previous importation and payment of duty, unless there is a specific provision to the contrary. The only possible provisions would be items 802.10 and 802.30. Item 802.10 requires that exportation be for exhibition, examination, or experimentation for scientific or educational purposes. Item 802.30 requires exhibition or use at any public exposition, fair, or conference. Use of the merchandise for a commercial sales meeting does not fall within the purview of either of these item numbers.

Conclusion.—In light of the foregoing, we are of the opinion that the merchandise of foreign origin in question should be classified under the appropriate tariff provisions as there is no exemption from duty applicable under the stated circumstances. Articles of domestic origin may be admitted free of duty under item 800.00, TSUS, upon compliance with the regulations.

(C.S.D. 79-498)

Classification: Whether a Buckled Strap or Drawstring on Raincoat Collars Ornament the Raincoat

Date: June 29, 1979
File: CLA-2-R:CV:MC
061254 MJ

AREA DIRECTOR OF CUSTOMS,
New York Seaport,
New York, N.Y.

DEAR SIR: This ruling replies to Request for Internal Advice No. 53/79, concerning the tariff classification of two women's raincoats.

Issue.—Whether a buckled strap with loops on a stand-up collar on one sample and a channeled drawstring beneath the collar on the other sample ornament the garments for tariff purposes?

Facts.—The first sample, labeled style KP–17, is a woman's reversible raincoat with a six-button open front, slash pockets, and a mandarin collar, which is a stand-up collar about 2 inches high. Buckled straps serve as tabs on the sleeves. A wider but otherwise identical strap (about 1 inch wide) fits through three outside vertical loops on the mandarin collar. The raincoat is in chief value of cotton.

The second raincoat, labeled style KP–41, is a woman's lined raincoat with a five-button fly front, two slash pockets, and channeled sleeve ties. A textile channel curves around the upper back area, over the shoulders, and ends on both sides of the open front. Although the channel continues all the way across the back, the drawstring does not. The drawstring can be tied over the open front. This raincoat is also in chief value of cotton.

Law and analysis.—Headnote 3, schedule 3, Tariff Schedules of the United States (TSUS), sets forth various kinds of embellishments that may render an article ornamented for tariff purposes. In *Blairmoor Knitwear Corporation* v. *United States*, 60 Cust. Ct. 388, C.D. 3396 (1968), the court held that for a feature to ornament a garment, it must serve a primarily decorative rather than a utilitarian function.

The buckled strap on the mandarin collar of the first sample (style KP–17) allows the coat to be tightened above the highest button on the open front. The strap therefore can give added warmth and protection from the elements when buckled and tightened. Although it possesses decorative features, the strap serves a primarily utilitarian function.

The textile channel enclosing the drawstring, which appears on the second sample (style KP–41), is constructed below both the collar and the highest button of the open front. The channeled drawstring therefore does not add significant warmth or protection against the elements. Also, tying the drawstring does not appear to significantly affect the fit of the garment. Textile fabric is one of the types of ornamentation specifically listed in headnote 3. Therefore, the textile channel and drawstring ornament the raincoat.

Holding.—Therefore, the first sample (style KP–17) is classifiable under the provision in item 382.12, TSUS, for other women's girls' or infants' wearing apparel, not ornamented, of cotton, not knit, coats valued over $4 each, dutiable at the rate of 8 percent ad valorem.

The second sample (style KP–41) is classifiable under the provision in item 382.00, TSUS, for women's, girls', or infants' lace or net wearing apparel, whether or not ornamented, and other women's, girls', or infants' wearing apparel, ornamented, of cotton, dutiable at the rate, of 35 percent ad valorem.

(C.S.D. 79-499)

Value: Whether a License Fee Paid by an Importer Is Considered Part of the Purchase Price

Date: July 2, 1979
File: R:CV:V GE
541937

To: Area Director, New York Seaport, New York, N.Y.
From: Director, Classification and Value Division Headquarters, Washington, D.C.
Subject: Request for reconsideration of internal advice request No. 71/78.

This is in reply to your request, dated February 12, 1979, for reconsideration and clarification of our position concerning royalty payments for the right to use certain patented equipment imported from Canada.

Issue.—Whether royalty payments paid to the seller for certain rights to use a patented machine are so intimately linked with the purchase as to constitute a part of the actual price.

Facts.—The licensor, a foreign corporation, manufactures and sells an extrusion machine used to produce precast concrete cored slabs. The licensor has applied for patents on this machine in both the United States and Canada and represents that it has the sole right to grant exclusive licenses to manufacture, sell, and use the machine and the exclusive right to license the sale of its products. The licensee, an American corporation, imported a single machine for use in the manufacture of concrete products.

By agreement, the licensor granted to the importer an exclusive license to manufacture concrete products using one or more machines at a given plant in a specifically defined geographical area and the right to sell such products inside and outside this area. The importer agreed to pay the licensor an annual royalty based on production within the territory of the exclusive license. The royalty was stated in terms of cents or fractions of cents per square foot of commercial concrete production, depending on the total level of production at the plant. The minimum royalty for any annual period is $2,000, and the maximum is $5,000.

The agreement also provided that the importer shall purchase the machine at a set price ($52,000), f.o.b. licensor's factory. This price was based on the inclusion of the royalty payment provision in the license agreement. The licensor warranted the equipment against defects in material and workmanship and agreed to provide service personnel at a per diem rate set forth in the agreement.

Law and analysis.—A review of relevant court decisions reveals that royalty payments for the right to purchase or sell imported merchan-

dise or to use patented processes in connection with such merchandise must be distinguished from royalty payments for the right to use imported merchandise. In *United States* v. *F. B. Vandergrift Co.*, 26 CCPA 360 (1939), the Court of Customs and Patent Appeals held that a license fee for "the exclusive right to purchase the involved and like machines for export to the United States and the exclusive right to manufacture and sell machines like those involved both in the United States and Canada" was not dutiable. The court carefully narrowed its holding by noting that:

> * * *, it clearly appears that the license fees were not paid for the right to use the machine in question.
>
> If it appeared from the evidence of record that the importer paid $1,800 per machine, plus $1,200 per machine for the right to use, we would be compelled to hold that, as the right to use is one of the elements of ownership (*Billings* v. *United States*, 232 U.S. 261, 280), the so-called license fees were part of the purchase price. Id., at 364.

In *Billings* v. *United States*, *supra*, the issues involved the construction and constitutionality of a tax on the use of foreign-built yachts. The court distinguished between active use and passive use. The former is the actual exercise of the right to use, not necessarily exerted by the mere fact of ownership. The latter pertains to ownership and must exist where there is ownership, as one may not obtain ownership without acquiring the privilege of use.

It is this latter construction of use which the Court of Customs and Patent Appeals referred to and which we are concerned with in the present case. Nowhere did the Supreme Court in *Billings* or the CCPA in *Vandergrift* distinguish between exclusive and nonexclusive rights to use.

In *BBR Prestressed Tank, Inc.* v. *United States*, 64 Cust. Ct. 787, A.R.D. 265 (1970), the Appellate Division of the Customs Court found a "license fee" paid to the seller, which was required upon the purchase of the imported tank prestressing machine, to have been part of the purchase price and therefore part of export value. In this case, the court stressed that the thrust of the lower court's opinion, which it affirmed, was to question the authenticity of the license agreement and suggest that the so-called license fee was in reality a disguised portion of the price.

The Customs Court, in *Imperial Products, Inc.* v. *United States*, 425 F. Supp. 852, 854, 77 Cust. Ct. 66, 69 (1976), reaently stated that:

> A royalty fee may or may not be part of the dutiable value. When a royalty is paid on each and every importation and is inextricably intertwined with the imported merchandise such fee is part of the dutiable value. *BBR Prestressed Tanks, Inc., Frank P. Dow Co., Inc., of L. A.* v. *United States*, 64 Cust. Ct. 787,

A.R.D. 265 (1970); *Erb & Gray Scientific, Inc.* v. *United States*, 53 CCPA 46, C.A.D. 875 (1966). When the fee is not inextricably intertwined with the production of the merchandise or is optional or is paid for the exclusive right to manufacture and sell [the imported merchandise] in a designated area it is not dutiable. *United States* v. *Rohner Gehrig & Co., Inc.*, 9 Cust. Ct. 591, R.D. 5724 (1942).

On appeal, the Court of Customs and Patent Appeals, in *United States* v. *Imperial Products, Inc.*, 570 F. 2d 337, 65 CCPA 38, C.A.D. 1203 (1978), affirmed the lower court's ruling that the royalty fee was for the right to make and sell a complete brush under the patent rather than for the use of individual imported brush heads. Other portions of the opinion, concerning separability of appraisement, are not relevant to the issues considered here.

In the present situation, the license agreement conferred upon the importer the right to use the extruder power unit and saw. Ownership of the equipment could not have been obtained without this right.

The quoted "purchase" price of $52,000 was contingent on the importer signing a license agreement which included minimum royalty payment of $2,000 per annum for the exclusive territorial right to use the equipment for a definite period of time. Title to the machine could not have been obtained by payment of the $52,000 alone; agreement to pay the royalty was also necessary. The tie between the price and the license fee in this case is stronger than the relationship of the fee to the exclusive right to use the imported merchandise within a certain area. Unless the importer can overcome the presumption established that the license fee is actually part of the purchase price, this office is of the opinion that the license fee is inextricably intertwined with the imported extrusion machine.

Holding.—The license fee paid by the importer is so intimately tied to the purchase and subsequent use of the imported machine as to be properly considered a part of the purchase price under export value.

(C.S.D. 79-500)

Classification: Plastic Sheeting Otherwise Usefully Processed

Date: July 10, 1979
File: CLA-2:R:CV:MA
061372 C

To: District Director of Customs, Charleston, S.C. 29402.

From: Director, Classification and Value Division.

Subject: Internal Advice Request No. 42/79, concerning the tariff classification of plastic sheeting manufactured in Japan.

Facts.—The merchandise involved, is a polyethylene sheeting sold under the (named) trademark. (The subject) sheeting consists of two outer layers of polyethylene film surrounding plastic strips which run both lengthwise and crosswise.

The plastic strips are approximately one-sixteenth inch in width and are spaced parallel to each other approximately three-eights inch apart in both lengthwise and crosswise directions. An informal examination indicates that the plastic strips measure approximately 0.003 inch thick. The strips are considered manmade fibers because they are within the purview of the definition of textile strips in schedule 3, part 1, subpart E, headnote 3(d), Tariff Schedules of the United States (TSUS). The strips in the lengthwise direction are not interwoven with the strips in the crosswise direction, but rather rest on top of the strips in the crosswise direction. The strips are laminated between the outer layers of polyethylene sheeting by means of adhesives.

The material is used primarily as temporary covers in the construction industry. After importation is it further fabricated into rolls 20, 40, or 100 feet wide. (The importer) sold approximately 90 percent of the merchandise imported in this form. The remaining portion was manufactured into such items as swimming pool covers and tarpaulins.

The manufacturer of the material in issue states that at the point of being joined together, the cost of the two layers of film is U.S. $0.0967 per square yard and the cost of the strips is U.S. $0.0320 per square yard.

The inquirer maintains that (the sheeting) is properly classifiable under the provision for other film, strips, and sheets, all the foregoing which are flexible, wholly or almost wholly of rubber or plastics, not of cellulosic plastics material in item 771.42, TSUS, rather than under the provision for other articles not specially provided for, or plastics in item 774.60, TSUS.

Schedule 7, part 12, subpart B, headnote 2(iv)(D), TSUS, provides that "This subpart does not cover film, strips, sheets, and plates which have been ground on the edges, drilled, milled, hemmed, or otherwise usefully processed (except surface-processed)."

The inquirer claims that the process for manufacturing (the sheeting) is not within the purview of the phrase "drilled, milled, hemmed or otherwise usefully processed" found in the above-cited headnote. He states that such processing refers to the manufacture of the plastic sheeting into a different end product. For example, if (the sheeting) had been imported in the form of tarpaulins or swimming pool covers, such articles would fall within the ambit of the quoted headnote and be properly classifiable under item 774.60, TSUS.

The inquirer states that the principle of statutory construction of

ejusdem generis requires that the term "otherwise usefully processed" be interpreted as referring to processes of a like class with those previously described by the phrase "drilled, milled, and hemmed."

The inquirer asserts that the Customs Service interprets the term "otherwise processed" too broadly noting that the Service has held (other sheet) to be within the purview of headnote 2(iv)(D) because it had been "otherwise processed." Specifically, that processing consisted of laminating two plastic sheets together with strips in between. The inquirer points out that the lamination process, however, like extrusion, is fundamental to the manufacture of (subject), and is not, like hemming, drilling, or milling, in the nature of further processing necessary to make (the sheeting) into a different end product.

The inquirer further asserts that the legislative history of Public Law 95–160, amending headnote 2(iv)(D) to add the word "usefully" to the phrase "otherwise processed," makes it clear that subpart B classification should be used unless (the sheeting) is processed into a different end product.

Alternatively, the inquirer submits the argument that the lamination process for manufacturing (the sheeting) be viewed as surface processing thus requiring classification under item 771.42, TSUS. He suggests that the lamination process, by virtue of the fact that it involves applying liquid adhesives to the inner surface of the plastic film, is a kind of surface processing.

Finally, the inquirer suggests that inasmuch as the processing of (the sheeting) cannot be characterized as useful processing or surface processing, headnote 2(iv)(D) does not apply thus requiring classification of the material under item 771.42, TSUS.

Issue.—Whether the lamination process used in the manufacturing of (the sheeting) falls within the purview of the term "otherwise usefully processed" found in schedule 7, part 12, subpart B, headnote 2(iv)(D), TSUS.

Is the sheeting "almost wholly of" plastics within the intendment of general headnote 9(f)(iii), TSUS?

Law and analysis.—We note that (the sheeting) is composed of plastic and textile strips with the textile portion representing 24.86 percent of the value. In order to be classified under item 771.42, TSUS, it is necessary that the sheeting be "almost wholly of" plastics. For tariff purposes the term "almost Wholly of" means that the essential character of the article is imparted by the named material. Certainly, in this instance the textile strips are equally as essential to the sheeting as the plastic component. Thus we cannot classify the (sheeting) under item 771.42, TSUS, as it is not almost wholly of plastics.

We do not agree with the inquirer that only processing similar to

the processes listed in headnote 2(iv)(D) such as "drilling, milling, or hemming" would exclude film or sheeting from being classified under subpart B. The wording "or *otherwise* usefully processed" appears to indicate that other processes were intended. [Italic added.] The insertion of textile strips just prior to lamination constitutes a useful processing in that such a processing strengthens or reinforces the plastic sheeting.

We do not agree that the legislative history supports the position that the (sheeting) manufacturing process is not a useful processing. It is our view that Public Law 95-160 clarified headnote 2(iv)(D)'s meaning of otherwise processed. It did not modify or exclude any processing except that done merely as an attempt to obtain lower tariff rates, such as the superfluous drilling of holes. The processing does not have to be the immediate end purpose, as the inquirer appears to contend, but merely a step toward a useful commercial end purpose.

Finally, we do not consider the lamination process to be a surface processing within the meaning of headnote 2(iv)(D).

Holding.—The polyethylene sheeting in issue has been "otherwise usefully processed" and is classifiable under the provision for other articles not specially provided for, of plastics in item 774.60, TSUS.

(C.S.D. 99-501)

Classification: Figures Inspired by the Movie, "Star Wars"

Date: July 11, 1979
File: CLA-2:R:CV:MA
055257 SST

To: District Director of Customs, Seattle Wash.
From: Director, Classification and Value Division.
Subject: Internal advice request No. 74/78 concerning the tariff classification of the "Death Vader," "Sand People," "Jawa" and "Chewbacca" Star Wars figures.

Facts.—The above four "Star Wars" figures were classified as other toys not specially provided for in item 737.95, TSUS. The inquirer contends that the four articles are properly classifiable as toy figures of animate objects in item 737.40, TSUS.

Issue.—Was the classification of this merchandise under the provision for other toys not specially provided for in item 737.95, TSUS, correct?

Law and analysis.—Toy figures of animate objects need not necessarily be representations of human beings. They may be either representations of earth beings or other living beings. This interpreta-

tion was given in the case of *Lewis Galoob Co.* v. *United States*, C.D. 4239 (1971) wherein the court equated the word "animate" with a *living* being [italic ours]. In the main body of the case, the court uses the phrases "human or other living being," from which an inference can be drawn that creatures other than human beings were contemplated as being animate objects, for example, creatures which are life forms on other planets. The court, moreover, refers to the case of *Louis Marx & Co.* v. *United States*, 40 Cust. Ct. 610 (1958), for a definition of the word "animate." In the *Marx* case, the court cited the dictionary definition of the word, concluding that an animate object is one representing animals or people, that is, possessing animal life, and that inanimate objects are those which are not endowed with animal life, such as benches, trees, fences, etc.

Insofar as the four aliens from the motion picture "Star Wars" are concerned, they are, with the exception of Darth Vader, animate creatures, recognizable life forms on other planets. They are humanoid or human-like in that they think, play, fight, and communicate to one another. They possess all the traits associated with human beings.

This does not imply that all extra-terrestal creatures will be considered toy figures of animate objects. Only those which are humanoid in form or those which are similar to earth-type animals, like apes, cats, spiders, etc., will be classifiable as such. Thus the "Ents" toy figure from J. R. Tolkien's *Lord of the Rings* would not be a figure of an animate object. The "Ents" resemble trees which are not considered animate objects on earth and which therefore are not classifiable as animate objects for tariff classification purposes. As a further example, the wind-up bug like object referred to in headquarters letter Mfg. 492.113 c 004055 dated April 20, 1970, would not be a toy figure of an animate object because there is no easily identifiable counterpart of this bug like creature in the animal kingdom.

Darth Vader is now considered a human in the movie "Star Wars." Underneath the black mask there is presumably the face of a human being as opposed to that of a robot. The Darth Vader figure, therefore, is a doll for tariff classification purposes, classifiable in item 737.22, TSUS.

Holding.—The Darth Vader figure is classifiable as a doll in item 737.22, TSUS.

The other three Star Wars figures were improperly classified as other toys not specially provided for in item 737.95, TSUS. They are classifiable under the provision for other toy figures of animate objects in item 737.40, TSUS.

Please inform the inquirer of this ruling.

(C.S.D. 79-502)

Liquidated Damages: Federal Income Tax Deductibility

Date: July 18, 1979
File: ENF-4-02.1-R:E:M
609931 A

To: Regional Counsel, Chicago Region.
From: Director, Entry Procedures and Penalties Division.
Subject: Federal income tax deductibility of claims for liquidated damages.

Your memorandum dated May 3, 1978 (ENF-40-CO RLH), asked for internal advice as to whether violators or other interested parties should be notified that liquidated damages paid to Customs are not deductible for Federal income tax purposes.

Customs Circular ENF 4-R:E:P, dated June 2, 1977, instructed the district director/area director to include in decision letters in connection with a fine, penalty, claim for forfeiture value, claim for liquidated damages, or of a seizure of merchandise subject to forfeiture a statement that "* * * amounts paid as penalties in connection with violations of Customs laws are not deductible for Federal income tax purposes * * *" The basis for this instruction was a communication from the Internal Revenue Service pointing out that "* * * amounts paid as penalties in connection with violations of Customs laws are not deductible for Federal income tax purposes."

Under section 162(f), Internal Revenue Code of 1954, as amended (26 U.S.C. 162(f)), and implemented by 26 CFR 1.162-21, "No deduction shall be allowed * * * for any fine or similar penalty paid * * * the Government of the United States." You refer to the legislative history of section 162(f) which reflects a concern for public policy and applicability in any case in which the taxpayer is required to pay a fine because he is convicted of a crime (felony or misdemeanor) * * *.

You point out that Customs' statement advising of nondeductibility should not be applicable to liquidated damages because they are strictly contractual in nature and do not arise as a result of a criminal conviction. On the basis of public policy, you distinguish Customs civil penalties and believe that they are properly within the scope of penalties which are not allowed as deductions.

We have consulted with the Internal Revenue Service, and that agency agrees with your position, reporting that research has indicated that when the liquidated damages are contractual in nature and reasonable in amount, they are not to be regarded generally as penalties. Cases cited in support of this position are *United States* v. *United*

Engineering & Contracting Company, 234 U.S. 236, 241 (1913); *Rex Trailer Co., Inc.* v. *United States*, 350 U.S. 148 (1948); and *Sun Printing & Publishing Association* v. *Moore*, 183 U.S. 642 (1902).

Accordingly, claims for liquidated damages are not generally to be regarded as penalties, and Circular ENF-4-R:E:P, dated June 2, 1977, will be amended to delete the reference to claims for liquidated damages among those items which are not deductible.

(C.S.D. 79-503)

Classification: Steel Pipe Without A.P.I. Monogram

Date: July 24, 1979
File: CLA-2:RCV:MA
061116 E

To: Mr. Louis A. Mezzano, District Director of Customs, Detroit, Mich.

From: Director, Classification and Value Division.

Subject: Classification of steel pipe conforming to A.P.I. specifications for oil well casing except for the A.P.I. monogram. Items 610.39 to 610.42, TSUS. I.A. 194/78.

In your letter of December 8, 1978. (MAN-1-CV:IS JD), you submitted a request for internal advice initiated by (name) on behalf of (client).

The issue concerns the proper classification of steel pipe which conforms to A.P.I. specifications for oil well casing except that it does not have the A.P.I. monogram.

In ORR Ruling 428-71, it was stated:

> The Bureau has consistently interpreted these requirements as constituting mandatory specifications. In a ruling dated May 18 1964, circulated as C.I.E. 1941/64, and published as T.D. 56272(49), we held item 610.39, TSUS, requires complete conformance with A.P.I. specifications. Oil well casings not having A.P.I. monograms appearing on them were excluded from item 610.39. In this case, we rejected the argument which sought to justify the application of the provision because the products had dimensional characteristics for A.P.I. oil well casings meeting these requirements.

The request for internal advice asks that we reconsider this ruling as it is incorrect for the following reasons:

(*a*) It could never have been the intent of Congress that a private trade association should have the right to determine the tariff status of a particular importation by a particular manufacturer merely by the withholding or granting, at its discretion, of a license to use a trademark.

(*b*) The use of the A.P.I. monogram provides no assurance to U.S. Customs or the ultimate U.S. purchaser that the steel pipe containing the monogram has been produced to A.P.I. specifications.

(*c*) For commercial reasons, the manufacturer may consider it undesirable to use the A.P.I. monogram even though the imported product may otherwise conform to A.P.I. specifications.

The provision in the pipe schedule for "steel pipe conforming to A.P.I. specifications for oil well casing" appears to have been derived from the description of merchandise in *United States* v. *The Winkler-Kock Engineering Co.*, 41 CCPA 121, C.A.D. 540. That case concerned the tariff classification of seamless hot rolled A.P.I. casings, and in setting forth the facts, the court stated:

> * * * As hereinbefore indicated, A.P.I. are the initials of the American Petroleum Institute and they show, when stamped upon the casing units, that such units conform to the specifications and requirements of that institute.

As we view the language under consideration, the Congress used very clear and unambiguous language in the pipe schedule in providing for the merchandise which was the subject of the court case. In addition, the presence of proper A.P.I. markings evidences to the trade a quality product, manufactured by an approved manufacturer, and produced in conformity with critical A.P.I. standards.

Data contained in Explanatory and Background Materials, Tariff Classification Study, schedule 6, November 15, 1960, disclose that in considering language to make provision for oil well casing in TSUS, there existed a problem of identification. It also discloses that counsel for the American Institute of Imported Steel, Inc., while advocating a provision for oil well casing, advised that its client would not strenuously object to a further qualification that it meet A.P.I. specification. When TSUS was enacted, this qualification was made. To disregard the qualification as suggested by the inquirer, would be contrary to this data.

We have considered counsel's arguments and do not concur in their position that adherence to the clear and unambiguous language of the provision under consideration results in placing the determination of the tariff status of merchandise in a private trade organization. Nor can we accept their contention regarding assurance to the U.S. Customs or purchaser by the use of the monogram. As counsel points out in its request, "The use of the A.P.I. monogram is a warranty by the manufacturer to the purchaser * * * that the product which bears the monogram conforms to the applicable A.P.I. specification. * * *." Whether a manufacturer finds it undesirable to use the A.P.I. monogram is a choice he is free to make for various and sundry reasons.

Under the circumstances, headquarters is constrained to adhere to

its past administrative practice in the construction of the provision under consideration.

(C.S.D. 79-504)

Classification: Optical Fibers and Fiber Optic Cable

Date: July 24, 1979
File: CLA-2:R:CV:MSP
061491 TFC

DISTRICT DIRECTOR OF CUSTOM,
Buffalo, N.Y.

DEAR SIR: In your memorandum of May 1, 1979, you requested internal advice on the tariff classification of certain optical fiber and fiber optical cable (I.A. No. 112/79). The request was initiated by (name) on behalf of the shipper and manufacturer, (name). The request concerns prospective shipments of merchandise. Descriptive literature and a sample accompanied the request.

Facts.—The optical fiber is a single strand made of fiber glass. The standard length is 1 kilometer per spool. The fiber is incorporated into a cable of one or more strands or sold separately by the meter. The fiber has an approximate value of $0.30 Canadian funds per meter.

The fiber optical cable is composed of a slotted plastic core structure with from 1 to 12 optical fibers arranged in slots surrounding the central member. The cable is sheathed with Sealpeth and has a central multistrand steel wire rope.

Light rays travel through the optical cable by means of the glass optical fibers which are capable of transmitting light. The fiber optical cable is designed for use as a light guide for voice, video, and digital or analog transmission.

Law and analysis.—The optical fiber and fiber optical cable are similar to articles for which a uniform practice of classification has been established.

In headquarters rulings 056163 dated July 14, 1978, and 058518 dated October 23, 1978, single strands of optical fiber were classified as unmounted optical elements under item 708.09, Tariff Schedules of the United States.

In an internal advice memorandum, I.A. 49/79, 061277 dated May 9, 1979, fiber optic cable was classified as mounted optical elements under item 708.29, Tariff Schedules of the United States. This determination followed CIE 1777/66 and headquarters rulings 034845 dated August 28, 1974, 044948 dated July 9, 1976, 058063 dated June 19, 1978, and 058518 dated October 23, 1978.

Holding.—Accordingly, the optical fiber is classifiable in the provision for unmounted optical elements under item 708.09, TSUS,

dutiable at the rate of 21 percent ad valorem. The fiber optical cable is classifiable in the provision for mounted optical elements under item 708.29, TSUS, dutiable at the rate of 21 percent ad valorem.

(C.S.D. 79-505)

Final List: Electrostatic Copying Machines

Date: July 27, 1979
File: R:CV:V RP
061144

To: Area Director, New York Seaport, New York City, N.Y.

From: Director, Classification and Value Division Headquarters, Washington, D.C.

Subject: Request for internal advice 35/79 concerning the importation of certain electrostatic copying machines.

Issue.—Whether imported electrostatic copying machines are included on the final list, published as T.D. 54521, and, if so, whether the copying machines which are sold or offered for sale in the principal markets of the country of exportation are "such or similar merchandise" from which a foreign value may properly be derived under section 402a(c) of the Tariff Act of 1930, as amended?

Facts.—Counsel for (name) requests that internal advice be sought with respect to the valuation of certain copying machines imported into the United States primarily from the * * *

The notice of proposed action (Customs form 29) issued by your office indicated that a foreign value under section 402a(c) exists for the subject copying machines based on the yen prices provided, less home market packing, plus export packing.

It is the opinion of counsel for the importers that the copying machines which are sold or offered for sale in Japan are not "such or similar merchandise" from which a foreign value, under section 402a(c), may properly be derived. Further counsel contends that the imported electrostatic copying machines are not included on the final list published as T.D. 54521, and are not, therefore, subject to appraisement under section 402a(c). Counsel states that the subject copiers which employ electrostatic technology are not photocopying machines within the meaning of the following final list provision:

> Machines, photocopying, having as an essential feature an electrical element or device.

It is the position of your office that the above-cited listing includes the subject merchandise and therefore, the copiers should be appraised

under section 402a. Moreover, you state that the Japanese home market electrostatic copiers are "similar" to those produced for the U.S. market. Consequently, it is your opinion that a foreign value (section 402a(c)) exists for the subject copiers.

Law and analysis.—In the majority of cases, imported merchandise is appraised under section 402 of the Tariff Act of 1930, as amended (new value law). However merchandise appearing on the final list (T.D. 54521) is appraised under section 402a of the Tariff Act, which is commonly referred to as the "old value law." The final list was promulgated to prevent application of the new value law to certain articles which the Secretary of the Treasury found would be reduced in value by 5 percent or more if appraisement were made under the new value law. See Senate Report No. 2526, U.S. Code and Administrative News, volume 3, page 4181. It has been the Customs Service's position that the determination of whether an article is on the final list is primarily a factual one. That is, it must be determined whether or not the article involved was considered by the Secretary of the Treasury when he made his decision that the value of that article would be reduced by 5 percent or more by the application of the new value statute.

In the case before us, the issue is whether the final list provision:

> Machines, photocopying, having as an essential feature an electrical element or device,

contemplates the inclusion of the subject electrostatic copying machines. The evidence of record indicates that electrostatic copiers had not been imported into the United States at the time the final list was being formulated; however, electrostatic copiers had been commercially introduced in the United States in 1951 by the Xerox Corp.

Section 6(a) of the Customs Simplification Act of 1956, which empowered the Secretary of the Treasury to create the final list, is explicit in its terminology that the list shall consist of imported articles. Certainly, if this particular article, in any form, was not being appraised during fiscal year 1954, it could not have been investigated by the Secretary and included in the above-cited provision. See *National Carloading Corporation* v. *United States*, 55 Cust. Ct. 723, A.R.D. 191 (1965), *rev'd on other grounds*, *Id* v. *Id*, 53 CCPA 57, C.A.D. 877 (1966).

In addition, all of the copying machines imported by the United States employ electrostatic technology to produce copies of originals, that is, images are created by the action of electrical charges induced in a rotating drum, or on the surfaces of specially prepared coated paper. As such, these copiers are readily distinguishable from the machines which constitute photocopiers, devices which employ the

technology of producing images by the action of light on chemically prepared materials.

Holding.—We conclude, both on the basis of court decisions in this area and on the factual determinations made in earlier Customs rulings, that electrostatic copying machines are not included on the final list. Since our determination that the subject merchandise is not included on the final list precludes appraisement on the basis of foreign value under section 402a(c), we do not address the issue of whether the Japanese electrostatic copiers are "similar" to those exported to the United States.

(C.S.D. 79-506)

Classification: Unspun Abaca Placemat

Date: August 1, 1979
File: CLA-2:R:CV:MC
061255 PG

AREA DIRECTOR OF CUSTOMS,
New York Seaport,
New York, N.Y.

Re Internal Advice Request 51/79.

DEAR SIR: This request for internal advice concerns the Customs tariff classification of an unspun abaca placemat.

Issue.—Whether the unspun abaca placemat is classifiable under the textile provisions of schedule 3, Tariff Schedules of the United States (TSUS), or under the provisions for products of fibrous vegetable substances of schedule 2, TSUS.

Facts.—The merchandise in question is an abaca placemat, product of the Philippines. The submitted sample measures approximately 13 inches by 19 3/16 inches. It consists of coarse, unspun abaca which is interwoven. The placemat's inner and outer edges are trimmed with a ½-inch wide, coarse grade, palm leaf braid.

The Port of Seattle classified the subject merchandise under the provision for other furnishings, not ornamented, of vegetable fibers except cotton: Other, in item 366.84, TSUS. The importer contends that the merchandise should be classified under the provision for articles not specially provided for, of unspun fibrous vegetable materials: Other, in item 222.64, TSUS.

Law and analysis.—Internal Advice Request 128/78 (CLA-2:R:CV:MC 055440 PG, dated June 7, 1979), copy enclosed, addressed the issue of whether unspun hemp baskets and an abaca potwrap were classifiable under the schedule 3 textile provisions or schedule 2 fibrous vegetable substances provisions. In that ruling, the terms

"fibers" and "fibrous vegetable substances or materials" were distinguished:

> Fiber is a "unit of matter, either natural or manmade, which forms the basic element of fabrics and other textile structures." *Man-made Fiber and Textile Dictionary*, Celanese Corp., 1974, p. 45–46 * * * . Fiber is in a condition ready for spinning, spinning being a twisting process whereby fibers are converted into yarn for textile purposes. *Fairchild's Dictionary of Textiles*, p. 550. Fibrous vegetable material, on the other hand, is merely plant material from which spinnable fibers may be obtained as desired. Whereas all vegetable fiber is made from fibrous vegetable material, and in this respect can be said to be fibrous, not all fibrous vegetable material is fiber. Those vegetable fibers provided for *eo nomine* in schedule 3, part 1, such as hemp, abaca, and sisal, are merely fibers obtained from fibrous vegetable materials. From the foregoing discussion, it follows that a vegetable plant may appear in either an unspun fibrous condition or in fiber form, depending upon processing or the lack thereof.

The ruling further stated that:

> * * * the inquirer's conclusion that no article made of hemp or abaca can be classified as an article of unspun fibrous vegetable material in schedule 2 in erroneous. While it is clear that a spinnable vegetable fiber is classifiable under the textile provisions of schedule 3, it would appear that if a fibrous vegetable material were incapable of being spun, it would be precluded from classification in schedule 3, and clearly fall within the ambit of schedule 2.

The articles in I.A. 128/78 were found upon examination to consist of crude hemp and crude abaca material which were not in a condition capable of being spun into a yarn for textile purposes. Consequently, it was held that the articles consisted of unspun fibrous vegetable materials within the meaning of schedule 2, thereby falling outside the scope of schedule 3.

Similarly, the article in the instant case consists of crude abaca not in a condition capable of being spun into a yarn for textile purposes. Consequently, the abaca placemat falls outside the scope of schedule 3, and is properly classifiable in schedule 2.

Holding.—Classification of the subject merchandise in item 366.84, TSUS, is incorrect. The unspun abaca placemat is properly classifiable under the provision for articles not specially provided for, of unspun fibrous vegetable materials: Other, in item 222.64, TSUS, dutiable at the rate of 5 percent ad valorem.

As a product of the Philippines, the unspun abaca placemat may be subject to duty-free treatment for purposes of the generalized system of preferences, as provided for in title V of the Trade Act of 1974, assuming it complies with general headnote 3(c), TSUS, and the applicable Customs Regulations.

(C.S.D. 79-507)

Classification: Whether Metal Label on Blue Jeans Ornaments for Tariff Purposes

Date: August 22, 1979
File: CLA-2:R:CV:MC
061363 MJ

Re: Request for Internal Advice No. 97/79.

AREA DIRECTOR OF CUSTOMS,
New York Seaport,
New York, N.Y.

DEAR SIR: This ruling determines the tariff status of a metal label on a pair of denim jeans.

Facts.—The sample label appears on a pair of 100 percent cotton denim jeans. The rectangular metal label is 1½ inches long and ¼ inch wide. It is attached to the upper portion of the right rear pocket of the jeans by means of a rivet at each end.

The metal label is unpolished with raised lettering spelling the trademark "Gitano." The letters are of roughly uniform size and are positioned along the same axis. The letters themselves have certain stylized characteristics: the G and the o have square-like shapes and are tilted slightly to the left; the a and the n have almost perpendicular curlicues at the intersections of the lines that form the letters; the i appears as a curved line inclined to the left; the t also has a slight curve to its vertical line. The National Import Specialist identifies these letters as a form of "old English" script known as "Black Letter" type. A rendering is enclosed.

Law and analysis.—Headnote 3, schedule 3, Tariff Schedules of the United States (TSUS), sets forth various kinds of features that may render an article ornamented for tariff purposes. The headnote includes "applique and replique work, beads, bugles, spangles, bullions, or ornaments * * *" As a nontextile feature, the sample metal label is an ornmaent within the meaning of this section of the headnote. However, nontextile features are subject to the same broad guidelines as textile features.

A feature renders an article ornamented if it serves a primarily decorative rather than a primarily functional purpose. *Blairmoor Knitwear Corp.* v. *United States*, 60 Cust. Ct. 338, C.D. 3396 (1968). A label ornaments an article if it embellishes or enhances its appearance, or increases its eye appeal. Customs has ruled that labels with plain block lettering or plain script lettering, not stylized or in the form of a design, do not normally ornament an article. Borders and logotypes normally constitute ornamentation. The size of the label,

the size of the lettering in relation to the label, and the color of a label are factors to be considered in ornamentation cases, but each factor alone is not normally dispositive of the issue. Ornamentation cases are necessarily decided by subjective judgment, based on an examination of each label.

The inquirer argues that several aspects of the metal label require the conclusion that the label does not embellish the article or increase its eye appeal. The inquirer points out that the label is of unpolished metal and is relatively small. More importantly, the inquirer argues that the lettering is relatively plain script lettering, of uniform size, and positioned along the same axis. Finally, the inquirer argues that the garment industry regard labels as functional features rather than as "mere ornamentation."

An examination of the label shows that while the letters are of uniform size and positioned along the same axis, they are clearly not in the form of plain script. Each letter has certain stylized features, which create a stylized word that embellishes the label or increases its eye appeal and that of the jeans. The attached rendering of the label shows the basis for this judgment.

The relatively small size of the label and the unpolished finish of the label are factors to be considered, but in this case they do not overcome the decorative effect of the stylized lettering. Finally, the opinion of the fashion industry as to the functional nature of labels is not strictly relevant. The distinction between decorative and functional for tariff purposes must be based upon an examination of the label in light of headnote 3, as interpreted by court decisions and previous Customs rulings.

Holding.—Therefore, the sample metal label renders the jeans ornamented for tariff purposes.

(C.S.D. 79-508)

Export Value: Sales and Offers For Sale Within Reasonable Time of Date of Exportation

Date: August 20, 1979
File: R:CV:V RS
061088

Re Application for further Review of Protest No. 3801-8-000065.

DISTRICT DIRECTOR OF CUSTOMS,
Detroit, Mich.

DEAR SIR: For the purpose of appraisement under section 402 of the Tariff Act of 1930, as amended (19 U.S.C. 1401a).

Issue.—(1) Was the merchandise entered for consumption "freely sold to all purchasers in the usual wholesale quantities" at the invoice price, and (2) If not, does the price which the foreign manufacturer sold "such or similar merchandise" to another importer before and after the date of exportation of the merchandise subject to appraisement establish the appraised value in this case?

Facts.—The protestant objects to the appraisement of a shipment of mushroom powder from Canada at United States $6.75 per pound less U.S. freight, duty, and brokerage fees included. The company claims that Customs should have appraised the shipment at the invoice price of United States $3.85 per pound, net packed, less U.S. freight included. The protest concerns merchandise exported on April 12, 1977, and entered on April 26, 1977.

Customs considered in appraisement other shipments of mushroom powder having the same product code and description, manufactured in Canada by the same company, and invoiced to another U.S. purchaser on a price per pound basis. The evidence shows that the foreign manufacturer exported mushroom powder to the protestant (purchaser No. 2) on November 2, 1976, at the invoice unit price of $3.85 per pound, whereas it exported such or similar merchandise to another U.S. purchaser (No. 1) on December 30, 1976, at the invoice unit price of $6.75 per pound. In the spring of 1977, it exported the merchandise to the protestant on April 12, at the invoice price of $3.85 and sold such or similar merchandise to purchaser No. 1 on April 26, at the invoice price of $6.75 per pound. The latter shipment, invoiced at the sales price, was exported on April 27. There is no evidence of other sales to these or other purchasers during this period by this manufacturer, nor is there evidence that any other company sold such or similar merchandise in the United States during this period.

Purchaser No. 1 used the imported merchandise in the manufacture of food products, whereas the protestant used it to manufacture a seasoning which it sold to an independent food processor. In each case, the food products containing the imported merchandise were sold in retail food distribution outlets. Purchaser No. 1 owns its outlets and purchaser No. 2 sells to independent retailers.

Customs did not take official samples of either shipment at the time of entry. Therefore, the exporter's statements concerning the quality of the two shipments in question cannot be verified by examination of the merchandise. The exporter claims that the other shipments were a more expensive, higher quality product, but there is no evidence to support this claim.

In a letter dated January 11, 1977, the food processor who obtains the mushroom powder from purchaser No. 2 suggested that the

product be sterile treated to reduce its high microbiological levels. In reply dated January 19, 1977, the protestant advised the food processor that "we are now using a different variety of raw mushroom in the mushroom concentrate in order to derive a low-level plate count as per your requirements. Therefore the product which we are supplying is somewhat darker than the previous material." In order to identify the difference purchaser No. 2 explained to its customer that it would assign a new-product code number. Importations of products with this code number commenced on January 11, 1978, according to the company records of purchaser No. 2. The new product was not exported at the time of exportation of the merchandise subject to this protest.

Law and analysis. 1. In section 402(b) of the Tariff Act of 1930, as amended (19 U.S.C. 1401a(b)), the export value of imported merchandise is defined in relevant part as "the price at the time of exportation to the United States of the merchandise undergoing appraisement at which such or similar merchandise is freely sold or, in the absence of sale, offered for sale in the principal markets of the country of exportation, in the usual wholesale quantities and in the ordinary course of trade, for exportation to the United States * * *" Customs appraised the merchandise according to its export value.

According to the first of four tests set forth in section 402 of the Tariff Act of 1930, merchandise is "such or similar 'if it is' identical in physical characteristics with, and was produced in the same country by the same person as the merchandise undergoing appraisement." 19 U.S.C. 1401a(f)(4)(A). The merchandise exported to both U.S. purchasers had the same product code and description. There is no evidence to suggest that the merchandise was different in quality or physical characteristics.

"Freely sold or offered for sale" means sold or offered "to all purchasers at wholesale." 19 U.S.C. 1401a(f)(1)(A). In *B.M.C. Trading Corp.* v. *United States*, 60 Cust. Ct. 961, A.R.D. 238 (1968), the issue was whether watch bands sold to one importer at $2.60 per dozen were freely offered at that price when all other importers had to pay $2. 75 per dozen for merchandise of the same description. The court ruled that a discount price to one purchaser is not a freely offered price. The freely offered price is the undiscounted price at which all purchasers in the relevant market can buy such or similar merchandise in the usual wholesale quantities (in this case, one dozen).

Alternatively, freely sold or offered for sale means sold or offered "in the ordinary course of trade to one or more selected purchasers at wholesale at a price which fairly reflects the market value of the merchandise." 19 U.S.C. 1401a(f)(1)(B). There is no evidence that

purchaser No. 2 was designated or "selected" by the seller. Moreover, even if purchaser No. 1 were a selected purchaser, the lower price paid for merchandise identical in physical characteristics and quality did not "fairly reflect the market value of the merchandise." See, e.g., *Reliance Trading Corporation of Illinois* v. *United States*, 60 Cust. Ct. 777, R.D. 11486 (1968), aff'd 63 Cust. Ct. 675, A.R.D. 260 (1969), aff'd 58 CCPA 140, C.A.D. 1020 (1971). (Higher prices of sales to nonselected purchasers rather than discounted price to selected purchaser represents export value.)

Export value is based on "the price at the time of exportation to the United States of the merchandise undergoing appraisement * * *." In a market of fluctuating prices, even the price on the date of order or contract may be insufficient to establish the price "at the time of exportation." See, e.g., *White Land Finlay, Inc.* v. *United States*, 29 CCPA 199, C.A.D. 192 (1942). Courts in that situation have accepted appraised value based on quoted prices ("freely offered" price) on the date of exportation. *Blumenthal & Co.* v. *United States*, 12 Cust. Ct. Appls. 529, T.D. 40166 (1924). On the other hand, when there is evidence of price stability during the period under consideration, courts may accept evidence of sales and offers for sale within a reasonable time of the date of exportation to establish the appraised value. *United States* v. *A. F. Stauff & Co.*, Cust. Ct. 458, Reap. Dec. 5949 (1943).

Evidence in this case suggests that the prices charged purchasers Nos. 1 and 2 remained constant during the period November 1976 through April 1977. The price to purchaser No. 1 was consistently higher than the price to purchaser No. 2, although this difference had nothing to do with the product itself, the wholesale quantity sold, or the type of purchaser. The price differences appeared to depend on the bargaining ability of the buyers.

The protestant claims that the price to purchaser No. 1 included a 10-percent selling commission, and that the price to purchaser No. 2 did not. If he finds evidence to support this claim, the appraising officer should make an appropriate adjustment in the dutiable value of the entry subject to protest.

Holding.—1. The merchandise entered on April 26, 1977, was not freely sold to the protestant at the invoice price of $3.85 per pound, because it was identical in physical characteristics to merchandise sold to another purchaser at $6.75 per pound.

2. Sales to the other purchaser nearly 5 months before and 2 weeks after the exportation of the merchandise subject to appraisement are in this case sufficient evidence of a stable market and of the export value of the appraised merchandise.

(C.S.D. 79-509)

Vessel Repair: Application of Dimetcote, an Inorganic Zinc Coating, to Cargo Tanks and Certain Vessel Areas

Date: September 7, 1979
File: VES-13-18-R:CD:C
104185 JL

This ruling concerns a petition for relief from payment of vessel repair duties filed under section 4.14(k), Customs Regulations.

Issues.—1. Is Dimetcoting a dutiable repair under the vessel repair statute or is it an alteration to the structure of a vessel so as to render it nondutiable?

2. If the cost of Dimetcoting is a dutiable repair, is its application to areas which underwent structural modifications which are considered nondutiable alterations dutiable?

Facts.—The vessel, an American-flag tanker built in 1958, was purchased in 1971, and was rebuilt and renamed in Japan that year. The repairs which remain at issue involve the application of a material called Dimetcote to the vessel's deck, external hull areas, and to the interior of its cargo tanks. Dimetcote is an inorganic zinc coating which the manufacturer's brochure touts as protecting against corrosion and against product contamination, thus reducing cleaning costs and time.

The petitioner's position is that the primary purpose for which the Dimetcote was applied to the vessel's deck and external hull areas was for the purpose of restoration in that those areas had always previously been painted, whereas the primary purpose of applying Dimetcote to the vessel's cargo system (the tanks and piping) was to render possible a different use of the vessel than was heretofore possible. Petitioner states that the tanks and piping had never before been painted and for that reason preservation or restoration by using Dimetcote was not a motive. The previous service of the vessel had been that of a worldwide service tanker transporting one grade of fuel on relatively long ocean voyages. Cleaning the vessel's tank, it is stated, took at least 3 to 4 full days. The petitioner claims that the vessel was purchased for the specific purpose of a long-term charter to an oil company which required the carriage of a multitude of highly refined petroleum products on successive short coastwise voyages. The oil company's contractual commitments required a vessel which would provide rotating service among San Francisco, Los Angeles, Portland, and Edmonds every 12 days, carrying 13 to 15 different products on each voyage. Often entirely different products are said to be carried on consecutive voyages. Petitioner states that if the vessel spent 4 days cleaning tanks between each voyage, she would

spend one-third of her time idle, whereas the tanks being coated with Dimetcote permit tank cleaning in less than 1 day. Further, it is claimed that no matter how much time was spent cleaning uncoated tanks they could have never been made suitable for certain sensitive products which the vessel is required to carry under its charter agreement.

Law and analysis.—CIE 478/67 affirmed a ruling by the Customs Service that the application in a foreign country of a zinc silicate coating to the cargo tanks of a vessel constituted dutiable repairs under the vessel repair statute. Attorneys for the vessel owner had argued that the coating was to be applied not for the protection of the tanks, but because the U.S. Navy required that in order for a vessel to carry jet fuel it must have its tanks coated to maintain the quality of the fuel. It was alleged that such coating would not be a repair but a reconditioning, or an addition to the hull and fittings of the vessel, to enable it to enter into a new trade or service.

After noting that Customs had based its rulings on the ground that maintenance painting is a repair and that the application to a coating which has protective and preservative qualities is analogous to maintenance painting, Assistant Secretary of the Treasury Davis referred in CIE 478[67 section 258(3), title 19, United States Code (now 19 U.S.C. 1466(b) (3)), which authorized the remission or refunding of duties paid pursuant to section 257 (now 19 U.S.C. 1466(a)), when the expenses were incurred "in the preparation * * * of tanks for the carriage of liquid cargo," but only if there had been no "permanent repair or alteration" of the tanks. Mr. Davis continued "the quoted language demonstrates a clear intent to include an operation such as the proposed coating within the purview of section 257. Since the zinc silicate coating would be of a permanent nature, it is dutiable and the duty would not be subject to remission or refund under section 258." While admitting that it was intended to coat the tanks in order to keep the cargo free from contamination, CIE 478/67 pointed out that the coating also serves to protect the tanks from deterioration and permanently alters them.

Petitioner does not argue that remission of duty is proper under 19 U.S.C. 1466(b)(3) as was urged upon us in CIE 478/67. However, petitioner does claim that the permanent nature of Dimetcote points up its dissimilarity to paint and alleges that the value of the ship was increased by $1.5 million as a result of its application. Petitioner estimates that the expected life of the Dimetcote installation is 15 to 20 years which is well beyond the expected useful life of the vessel. Petitioner asks that we overlook the incidental property of Dimetcote which is protection from corrosion, but instead look to the primary purpose of coating the tanks which was to modernize the vessel's cargo

capabilities and to permit her to enter employment previously impossible. Petitioner cites the recent Customs Service Decision, CSD 79-29, as supporting his position.

Customs Service Decision 79-29, 13 CUSTOMS BULLETIN 6, February 7, 1979, involved the dutiability under the vessel repair statute of inert gas systems which were installed in foreign shipyards on American tankers to enable those vessels to meet the requirements of S. 682. The principal components of the system which were installed were a scrubbing tower, fans, deck seal, scrubber circulating water pump, piping distribution system, and necessary controls. The system provides a means of clearing combustible gases from cargo tanks and replacing them with inert gases to reduce potential hazards. Customs basis for the ruling that the described installation would be a nondutiable alteration was that the system installed would be a new design feature, and not a replacement for, or restoration of, parts now performing a similar function, that is, a repair.

We observe that CSD 79-29 is distinguishable from the situation in the instant case (and the facts in CIE 478/67). The installation of the inert gas system as described in CSD 79-29 serves only one purpose, that of providing a means of clearing combustible gases and replacing them with inert gases. The Dimetcote, on the other hand, protects the metal inside the cargo tanks against corrosion (deterioration) and against product contamination. Therefore, the ruling in CSD 79-29 is not applicable to the case at hand. However, the case under consideration is on all fours with CIE 478/67 where the Treasury Department held that when a zinc silicate coating is applied to keep cargo free from contamination but also serves to protect the tanks from deterioration, the expense will be treated the same as maintenance painting.

The petitioner's second argument concerns Dimetcote applied to structural changes which Customs had already ruled to be nondutiable alterations. Headquarters held in a letter dated April 25, 1975, file VES-13-18, case 100856, that Dimetcoting applied to nondutiable alterations on the vessel would not be dutiable pursuant to CIE 1043/60. CIE 1043/60 held that painting new sections and other additions of a vessel is a part of the cost of the alterations and therefore not subject to the duty imposed by the vessel repair statute.

Notwithstanding the above, however, the Regional Commissioner did not make allowance for the cost of applying Dimetcote to the areas which were deemed to be nondutiable alterations because the petitioner did not furnish invoices with sufficient breakdowns to make an allocation between dutiable and nondutiable Dimetcoting. Petitioner has now submitted a telegram dated June 12, 1979, from (name of company) Japan in which a breakdown of the cost estimates

of Dimetcoting is made to the alterations carried out to the vessel amounting to 33,379,200 yen. The telegram states that the costs are estimated on the basis of Dimetcote material supplied by the owner and calculated at the labor cost level of the year 1971. We find the telegram from (name) shipyard acceptable with reference to September 8, 1971, invoice S46–413G, and as a separate invoice of Dimetcoting applied to areas which were deemed alterations to the hull and fittings of the vessel.

Holdings.—1. Where an inorganic zinc coating is applied to the cargo tanks of a vessel which both enables it to carry a cargo which it could not previously carry and to protect the tanks from deterioration, the coating constitutes a dutiable repair within the meaning of 19 U.S.C. 1466.

2. When alterations are made to the hull and fittings of a vessel and a zinc silicate coating is applied at the same time, the cost of the coating is nondutiable under the vessel repair statute.

Effect on other rulings.—None.

Recent Unpublished Customs Service Decisions

The following listing of recent administrative decisions issued by the Office of Regulations and Rulings, U.S. Customs Service, and not otherwise published, is published for the information of Customs officers and the importing community. Although the decisions are not of sufficient general interest to warrant publication as Treasury decisions, the listing describes the issues involved and is intended to aid Customs officers and concerned members of the public in identifying matters of interest which recently have been considered by the Office of Regulations and Rulings.

A copy of any decision included in this listing, identified by its date and file number, may be obtained in a form appropriate for public distribution upon written request to the Office of Regulations and Rulings, Attention: Legal Reference Area, room 2404, U.S. Customs Service, 1301 Constitution Avenue NW., Washington D.C. 20229. These copies will be made available at a cost to the requester of 10 cents per page. However, the Customs Service will waive this charge if the total number of pages copied is 10 or less.

Decisions listed in earlier issues of the CUSTOMS BULLETIN, through October 24, 1979, are available in microfiche format at a cost of $15.10 (15 cents per sheet of fiche). It is anticipated that additions to the microfiche will be made quarterly and subscriptions are available. Requests for the microfiche now available and for subscriptions should be directed to the legal reference area. Subscribers will automatically receive updates as they are issued and will be billed accordingly.

Dated: December 13, 1979.

HARVEY B. FOX,
Acting Director, Office of Regulations and Rulings.

Date of decision	File No.	Issue
8- 1-79	103629	Vessel repair: Whether the foreign purchases of a drum and spooling unit by a U.S.-documented fishing vessel are dutiable as pieces of vessel equipment under 19 U.S.C. 1466 or as imported merchandise under the

Date of decision	File No.	Issue
		tariff schedules, or nondutiable as additions to the vessel hull
11-20-79	104235	Vessels: Whether the exemption of Bermudan vessels from payment of special tonnage tax and light money warrants a refund of those taxes paid on a vessel of British registry with a home port in Bermuda
11-23-79	104236	Vessel repair: Whether an American-owned, undocumented vessel is subject to payment of duties on foreign repairs accomplished prior to arrival at U.S. port
11-20-79	104277	Carrier control: Use of foreign-flag vessel to transport American grain, originally transported from a U.S. port to a Canadian port, from the Canadian port to another U.S. port
11-13-79	104284	Carrier control: Whether the unlading from a foreign-flag vessel at a point in the United States of merchandise which has been laded at another such point, for the purpose of returning the merchandise to its U.S. point of origin, is violative of the Jones Act
11-20-79	104285	Vessels: Exemption of Bermudan vessels from payment of special tonnage tax and light money
11-28-79	104310	Instruments of international traffic: Whether components and parts used in the construction of international meteorological satellites qualify as instruments of international traffic
11-20-79	104312	Vessels: Exemption of Bermudan vessels from payment of special tonnage tax and light money
11-14-79	104345	Vessels: Dutiability of a drilling rig transported to the United States on a barge
11-26-79	104370	Carrier control: Whether the transportation by foreign barge of component parts of an offshore drilling platform from U.S. port to point above Outer Continental Shelf violates coastwise law
10-15-79	610101	Enforcement: Mitigation of penalties incurred for violation of 19 U.S.C. 1497
11-26-79	711420	Prohibited and restricted importations: Liqueur-filled chocolates
11-26-79	711527	Country of origin marking: Audio cassettes and their containers, assembled in Mexico from American and Japanese components and imported into the United States for repackaging and sale
11-26-79	711696	Entry: Reimportation without formal entry or payment of duties of racing cars if tools of trade under item 810.20, TSUS, and if registered on Customs form 4455 in the name of an individual
11-29-79	057907	Classification: Fruit and vegetable bag knitted from polyethylene strips (385.53, 772.20)
6-29-79	059060	Classification: Whether "quilting" stitching on exterior of jackets constitutes ornamentation

Date of decision	File No.	Issue
11-27-79	060458	Classification: Monofilament screens (338.30)
11-29-79	060525	Classification: Microcrystalline cellulose (493.18, 493.68)
11- 6-79	060716	Classification: Benzenoid wetting agents (405.35)
12- 4-79	060737	Classification: Reproduction washboard frames (206.60, 274.70)
12- 3-79	060819	Classification: Lace sweater (382.00)
11-30-79	060823	Classification: Ornamental handkerchiefs (370.08, 370.74)
11-30-79	060862	Classification: Boneless chicken with chicken broth (105.84, 182.52)
11-28-79	060867	Classification: Ornamental jeans (382.00)
11-28-79	060920	Classification: Hammock (386.09)
12- 3-79	060927	Classification: Cotton underwear with decal (380.00)
11-30-79	060938	Classification: Combination beach bag and towel (386.04, 386.25)
12- 4-79	060945	Classification: Double jasmin; musk (460.85)
12- 3-79	060948	Classification: Felt (359.50)
11-29-79	060960	Classification: Star chart (273.35)
12- 3-79	060969	Classification: Jeans with nonornamental label (382.33)
11-30-79	060975	Classification: Shirt with ornamental label
11-30-79	060993	Classification: Red cedar shakes and shingles (200.85)
11- 7-79	061115	American selling price: "Freely offered" test (700.60)
12- 3-79	061343	American selling price: Utility-type, slip-on woman's work shoe (700.60)
11-28-79	061404	Classification: Knit sweaters with scalloped edging (382.05)
11-15-79	061569	Classification: Shoe-style roller skates (734.90)
11-28-79	061613	Classification: Sprinkler (657.25, 662.50)
11-26-79	061698	American selling price: Open-toe, open-back, woman's indoor slipper with plastic sole and woven fabric upper (700.60)
12- 4-79	061710	Classification: Leather belt pouches (706.05, 706.08)
11-28-79	062189	Classification: File and plane tool (649.07, 651.31, 651.47)
11- 2-79	062243	Classification: Votive stands (653.37)
11-30-79	062253	Classification: Tubular fabric of man-made material (347.65, 666.00)
11-21-79	062263	Classification: Footwear with detachable and non-detachable roller skate (700.83, 700.85, 734.90)
11-20-79	062445	Classification: Beach sandal (700.58)
11-29-79	062502	Classification: Pen-watch combination with refill cartridge and batteries (682.95, 716.10, 760.05, 760.36, 800.00)
12- 3-79	062547	Classification: Musical toys (725.50, 737.45, 737.80)
12- 3-79	062558	Classification: Toy caricatures (737.22, 737.40)
11-15-79	062602	Classification: Steel ends for rock anchor (657.25)
11-20-79	062656	Classification: Flat braided plastics (703.90, 703.95, 774.60)
11-28-79	062672	Classification: Automobile sun curtain (256.90)
11-26-79	062680	Classification: Fishing tackle case (706.60, 731.70)

Date of decision	File no.	Issue
11-20-79	062694	Classification: Portable trailer dumper (664.10)
11-16-79	062712	Classification: Electro-surgical dispersive pad (688.15)
11-16-79	062713	Classification: Glass knifemaker (674.42)
11-28-79	062726	Classification: Wooden structures: playground equipment (207.00, 727.35, 727.40, 735.20)
11-26-79	062772	Classification: Tennis racket cover (706.60)
11-28-79	062787	Classification: Boot (700.58, 700.60)
12- 3-79	062794	Classification: Pool sandal (700.58)
11-28-79	062808	Classification: Metal post supports (657.25)
11-28-79	062821	Classification: Calculator (676.20)
11-20-79	062831	Classification: Plastic door guard (774.60)
11-20-79	062842	Classification: Car bodies for self-propelled rapid-transit railcars (690.40)

List of Unpublished Decisions—1979

Reproduced below is a list of unpublished Customs Service decisions compiled from lists of decisions printed in the CUSTOMS BULLETIN during 1979. Although these decisions were not of sufficient importance or of sufficient general interest to warrant publication as Treasury decisions, they were listed in order to aid Customs Officers and concerned members of the public in identifying matters of interest which have been considered by the Office of Regulations and Rulings. The decisions contained in the list below have been grouped by the issuing branch or division in the Office of Regulations and Rulings. Each group of decisions is preceded by the name of the issuing branch or division.

A copy of any decision included in this listing, identified by its date and file number, may be obtained in a form appropriate for public distribution upon written request to the Office of Regulations and Rulings, attention: Legal Reference Area, room 2404, U.S. Customs Service, 1301 Constitution Avenue NW., Washington, D.C. 20229. These copies will be made available at a cost to the requester of 10 cents per page. However, the Customs Service will waive this charge if the total number of pages copied is 10 or less.

Most of the decisions in the list below are now available in microfiche format, with the balance being available shortly. Requests for the decisions in microfiche format should be directed to the Legal Reference Area. Subscriptions are available upon request.

Dated: December 18, 1979.

DONALD W. LEWIS,
Director, Office of Regulations and Rulings.

CARRIER RULINGS BRANCH

Date of decision	File No.	Issue
12- 4-78	102878	Vessel repair: Whether foreign purchases of equipment used to separate and secure cargo are remissible under 19 U.S.C. 1466
1- 4-79	102994	Vessel repair: Customs supervision of unlading of vessel equipment for repair

Date of decision	File No.	Issue
3-26-79	102447	Vessels: Whether a U.S.-registered barge laden with export cargo is required to obtain a permit to proceed to a point on an inland waterway if a change of tugboats occurs at that point
9-12-78	103602	Carrier control: Use by U.S. city of harbor service craft built abroad
11-17-78	103060	Vessel repair: Whether damage to vessel tailshafts and engine crankshaft is casualty
10-20-78	103193	Carrier control: Whether a sailboat for carrying passengers is in coastwise trade
10-20-78	103513	Prohibited and restricted movements: Seizure of railroad cars in unpermitted local traffic
9-14-78	103585	Vessel repair: Whether work on vessel midbody is rebuilding or repair
11- 3-78	103673	Carrier control: Whether a vessel, used as a floating restaurant in territorial waters, is in coastwise trade
10-20-78	103677	Exportation of merchandise: Yacht remaining in the United States while title transferred to foreign owners and registered abroad
10-20-78	103680	Carrier control: Fishing vessel operating in foreign waters and landing fish in foreign port
11-17-78	103672	Vessel repair: Whether duty is imposed on foreign repairs to vessel under foreign registry at time of repairs
11-22-78	103686	Carrier control: Containers, qualifying as instruments of international traffic, transported between two coastwise points
10-30-78	103700	Carrier control: Whether foreign salvage vessel is in coastwise trade
11-22-78	103705	Vessels: Presentation of register at port of entry for inspection
10-20-78	103586	Carrier control: Whether the Federal Government may use foreign-built vessels for the transportation of personnel and equipment between coastwise points
12-12-78	103638	Carrier control: Foreign-built vessel used solely for training and educational purposes
11- 1-78	103643	Carrier control: Whether use of a foreign-flag vessel in a U.S. port as a floating hotel is in violation of the coastwise laws
11- 2-78	103667	Vessel repair: Dutiability of inspection followed by repairs
12-12-78	103687	Vessel repair: Dutiability of foreign repairs to public vessels
12- 4-78	103694	Carrier control: Foreign-built and owned vessel used solely to process fish on the high seas and in territorial waters
12-19-78	103696	Instruments of international traffic: Whether gondolas and flatbeds used to transport large or irregularly shaped merchandise qualify as instruments of international traffic

Date of decision	File No.	Issue
11-24-78	103714	Vessels: Whether Communist China is a foreign port or place where vessels of the United States are not ordinarily permitted to enter and trade for the purpose of assessing special tonnage tax and light money
11-21-78	103716	Instruments of international traffic: Stainless steel tanks
11-17-78	103722	Carrier control: Whether coastwise laws may be waived for carriage of quadriplegic patient
12- 8-78	103747	Carrier control: Transportation of stevedoring equipment for use in handling cargo in the foreign trade
12- 8-78	103645	Carrier control: Whether a foreign-flag vessel can legally land in a United States port fish or fish products taken on board from a catching or processing vessel while located either in the territorial sea, internal waters, or port of a foreign country
12-14-78	103729	Carrier control: Whether a foreign-built fish processing vessel may receive fish on board inside and outside U.S. territorial waters and land fish in the United States or export such fish
12-27-78	103762	Carrier control: Whether a foreign-built vessel solely used for fish processing can be in coastwise trade
12-27-78	103780	Carrier control: Whether foreign-flag vessels may transport fuel oil from the continental United States to the Panama Canal Zone
1-10-79	103748	Duty assessment: Dutiability of foreign-built yacht
1-15-79	103759	Instruments of international traffic: Plastic barrels
1- 5-79	103782	Vessel repair: Dutiability of foreign repairs to U.S.-flag vessel used as oceanographic research vessel
1- 5-79	103791	Duty assessment: Dutiability of foreign aircraft in international traffic
1-26-79	103765	Vessel repair: Whether casualty is sustained due to negligent mooring operation
1-12-79	103767	Vessels: Whether exemption from payment of special tonnage tax and light money warrants refund of duties paid on exempt vessel
1-29-79	103774	Contiguous countries: Whether snowmobiles may traverse lakes on the United States-Canadian border under special permit
2-14-79	103701	Vessel repair: Whether negligence of responsible crew members of a vessel constitutes casualty under 19 U.S.C. 1466
2-14-79	103736	Vessel repair: Whether the foreign repair of a bow thruster fouled by a mooring line in the United States warrants remission of duty under 19 U.S.C. 1466
1-18-79	103800	Vessels: Whether a cruising license permits a foreign vessel to arrive in and depart from the United States without entering and clearing
2-16-79	103803	Vessels: Refund of special tonnage tax and light money
2-14-79	103846/ 103804	Carriers: Whether Customs can waive the coastwise laws when national defense is not a consideration

Date of decision	File No.	Issue
3- 1-79	103781	Vessels: Salvage; criteria for compensation
2-23-79	103810	Vessels: Exemption of vessels of Qatari registry from the payment of special tonnage tax and light money
3- 9-79	103896	Carrier control: Whether the carriage in a foreign-flag vessel of a portion of oil cargo to New York and transference of the remainder to another foreign-flag vessel outside U.S. territorial waters for carriage to Boston constitutes a violation of the coastwise laws
4-10-79	103737	Carrier control: Use of foreign-built, oceanographic research vessel in U.S. territorial waters
3- 1-79	103742	Instruments of international traffic: Whether steel spacers and brace assemblies used in the container transportation of axle assemblies qualify as instruments of international traffic
2-28-79	103763	Vessels: Whether a cruising license is required for yachts or pleasure boats
3-27-79	103776	Instruments of international traffic: Steel tanks used to transport latex
2-27-79	103801	Vessel repair: Whether negligence of customhouse broker justifies acceptance of untimely petitions for relief from payment of vessel repair duties
2-27-79	103811	Carrier control: Whether the operation of a foreign-built vessel in oil spill cleanups is prohibited by any law administered by the Customs Service
3-30-79	103854	Instruments of international traffic: Steel cylinders used to carry uranium
3-30-79	103860	Aircraft: Procedure for reporting certain aircraft proceeding under a permit to proceed to an airport in the United States
3-22-79	103871	Vessels: Applicability of Customs and navigation laws to operation of ferryboat service between the United States and Canada
4-23-79	103706	Carrier control: Whether foreign yachts imported to United States with duty paid may be chartered to U.S. citizens
4-23-79	103788	Vessel repair: Whether a tugboat is a special purpose vessel
4- 3-79	103665	Carrier control: Whether coastwise-qualified vessels which lighter domestic crude oil from a foreign-flag VLCC stationed on the high seas must report their arrival and present a manifest
4-20-79	103821	Carrier control: Whether an oil spill cleanup vessel in U.S. territorial waters is engaged in coastwise trade if the recovered oil transported on the vessel is reused or resold
4-23-79	103841	Vessel repair: Evidentiary requirements for remission of duty paid
3-22-79	103843	Carrier control: Operation of a foreign-built, U.S.-registered fish processing vessel in territorial waters

Date of decision	File No.	Issue
4-12-79	103882	Carrier control: Whether a cruise is a carriage of passengers on a foreign vessel or a transportation of passengers on a foreign vessel
4-11-79	103925	Vessel repair: Whether reinforcement of beam ends and modifications of coamings and hatch cover locations are dutiable as vessel repairs
4- 9-79	103944	Instruments of international traffic: Whether empty railroad cars may enter the United States duty-free to engage in local traffic before engaging in international traffic.
5- 8-79	103734	Vessels: Requirements for clearance, reporting arrival, and making entry
4-24-79	103849	Carrier control: Use of a foreign-built vessel as a fish processing vessel in U.S. territorial waters
3- 5-79	103886	Carrier control: Whether temporary unlading of cargo from a foreign vessel landed in the United States for repairs is violative of the coastwise laws
4-23-79	103901	Vessel repair: Whether foreign repairs to a vessel's crane necessary to secure the safety and seaworthiness of the vessel
5-31-79	103991	Carrier control: Whether the coastwise laws prohibit foreign vessels from being used in the construction of cofferdams in U.S. territorial waters
6-12-79	103999	Vessel repair: Applicability of vessel repair statute to equipment imported into the United States for installation on a U.S.-flag vessel other than the importing vessel
8-15-79	103910	Carrier control: Whether the use of a foreign-built tug to tow vessls in a U.S. harbor is violative of the coastwise laws
5- 9-79	103967	Carrier control: Whether a foreign-built vessel can be used for charter boat sport fishing and sightseeing on Guam
5-16-79	103971	Vessels: Liability of vessel charterer to pay special tonnage tax and light money
6-22-79	103856	Vessels: Computation of tonnage tax when two acceptable documents issued at different times bear conflicting net tonnage figures
6-18-79	103996	Vessels: Failure of vessel master to furnish copies of Customs form 7512 to the district director upon clearance for a foreign port
7-24-79	103794	Carrier control: Whether students engaged in the operation of a foreign-built training vessel may be transported between coastwise points
7- 6-79	103906	Carrier control: Application of coastwise law to the carriage in U.S. territorial waters of passengers on board a foreign vessel
7-16-79	103995	Carrier control: Whether a noncoastwise qualified vessel

Date of decision	File No.	Issue
		engaging in oilfield stimulation is within the prohibition of coastwise law
6-26-79	104007	Carrier control: Status of cast and technicians on board a foreign vessel engaged in film making in U.S. territorial waters
7-23-79	104072	Carrier control: Whether an aircraft, leased to and piloted by the owner of an air charter service, is considered to be commercial or private when used to transport representatives and customers of a regular patron of the air charter service on a fishing trip to Canada with the pilot being reimbursed for fuel and his food and lodging
6-19-79	104018	Vessels: Whether vessels not technically engaged in foreign trade but arriving from a foreign port, are subject to tonnage tax
7-23-79	104086	Carrier control: Transportation of hydrofoil vessel as merchandise
8-14-79	104087	Classification: Aluminum fishing boats (696.05)
8-14-79	104112	Carrier control: Car ferries
8-15-79	104159	Vessels: Clearance requirements applicable to a vessel proceeding foreign via various domestic ports
8-15-79	104116	Vessel repair: Whether a crane rental charge incurred in a foreign country is dutiable under the vessel repair statute
8-15-79	104117	Merchandise control: Whether the use in domestic traffic of foreign cargo vans entering the United States as instruments of international traffic is permitted
8-27-79	104098	Vessel repair: Remissibility of duties paid for foreign repairs to vessel's boiler necessitated by negligent operation of fuel-handling system; remissibility of duties paid for ineffective repairs
8-31-79	104120	Vessel repair: Remissibility of duties paid for foreign repairs necessitated by crewmember negligence
9- 7-79	104144	Vessel repair: Remissibility of duties paid for foreign repairs to vessel necessitated by single act of negligence
9-21-79	104204	Vessel repair: Whether a breakdown of machinery constitutes a casualty which warrants remission of duties paid for foreign repairs
9- 2-79	104205	Instruments of international traffic: Whether plastic cores used in the manufacture and transportation of cigarette paper qualify as instruments of international traffic
10- 4-79	104135	Instruments of international traffic: Whether synthetic fabric used with an instrument of international traffic qualifies as part of such instrument
10-11-79	104229	Vessel repair: Nonremissibility of duties paid for foreign vessel repairs occasioned by normal wear and tear
10-17-79	104300	Carrier control: Whether contemplated coastwise trans-

Date of decision	File No.	Issue
		portation of foreign-flag passenger vessel is the "primary object" of voyage
10-23-79	104038	Carrier control: Transportation of passengers by foreign vessel between coastwise points in violation of 46 U.S.C. 289
10-22-79	104095	Vessels: Whether motor launches built in the United States and used in conjunction with a foreign-built and foreign-registered cruise ship are subject to duty when purchased by an American corporation at an auction in the United States for use in the purchaser's business
11- 2-79	104252	Vessels: Whether a refund of special tonnage tax and light money is warranted when the original vessel register is not shown to Customs officers at the time of entry of the vessel, but a duplicate register is shown to Customs officers at a later date
10-23-79	104299	Vessels: Exemption from payment of special tonnage tax and light money for vessels of the Bahamas, effective February 9, 1979
11- 2-79	104307	Carrier control: Whether a foreign-flag vessel may be used to tow the hulk of a vessel, which is not registered or enrolled under the flag of any nation, between two U.S. ports
11- 8-79	104311	Classification: Yachts, boats, and canoes imported into the United States (696.05, 696.40)
11- 9-79	104335	Carrier control: Use of foreign-registered vessel as a stationary storage vessel for imported foreign liquefied petroleum gas
		Drawback and Bonds Branch
11-27-78	209649	Foreign trade zones: Whether an article may enter Customs territory under item 907.10, TSUS, from foreign trade zone
11-27-78	209683	Bonds: Whether merchandise, recently exported to satisfy export bond, may be reimported by U.S. agency
1-15-79	209511	Drawback: Whether domestic construction and outfitting steel should be included in the scrap computation in liquidating drawback entries under 19 U.S.C. 1313(g), covering structural steel used in building a barge
11- 9-79	211027	Foreign trade zone: Whether color television receiver subassemblies imported from Taiwan and entered for consumption are subject to the quantitative restrictions set forth in item 923.79, TSUS, as added by Presidential Proclamation 4634

ENTRY AND LICENSING BRANCH

Date of decision	File No.	Issue
2-28-79	304769	Entry: Failure to deliver transit air cargo merchandise to Customs within 15 days from the date of receipt by forwarding airline at port of arrival
12-19-78	305652	Appeals and protests: Whether mistake of fact resulting in denial of protest is correctable
11- 8-78	306579	Prohibited and restricted importations: Alcoholic beverages
11- 8-78	306686	Vessel stores, supplies, and equipment: Vessel designed for offshore construction
11-27-78	306472	Entries: Right to make entry
11-29-78	306736	Liquidation: Applicability of statute of limitations on liquidation to entries made prior to statute's effective date
12- 4-78	306769	Entry procedures: Whether payment of duties may be deferred or duties paid in advance
1-16-79	306765	Entry: Customs acceptance of letters of authenticity for antiques
1-18-79	306789	Entry: Rental of common carrier's bond by nonbonded carrier
1-11-79	306842	Entry: Fresh fruits and vegetables
1-23-79	306909	Entry: Applicability of petroleum exchange law to imported commingled American and Canadian crude oil
1-22-79	306944	Entry: Carpets imported by serviceman stationed abroad
2- 6-79	306664	Personal exemptions: Alcoholic beverages
1-26-79	306942	Entry: Whether cultural exhibits displayed in a commercial establishment are precluded from duty-free entry under item 842.10, TSUS
3-19-79	306469	Entry: Use of a weekly consolidated entry summary for installment shipment
3-21-79	306878	Entry: Substitution of entries
2-28-79	306912	Generalized system of preferences: Requirements for duty-free entry
4-23-79	306708	Bonds: Issuance of cartman's license
4-23-79	306626	Exportation of in-bond merchandise: Customs supervision and verification
5-10-79	306968	Entry: Whether a professor, hired by an American university to instruct U.S. military personnel abroad, is in the service of the United States within the meaning of item 817.00, TSUS
6-28-79	306501	Returning residents: Exemptions for Americans in the foreign service
7-10-79	306454	Brokers: Foreign ownership of customhouse broker corporations
6-23-79	306885	Merchandise control: Quota status of certain nylon

Date of decision	File No.	Issue
		woven and knitted piece goods which are intended to be imported temporarily under bond and exported
8-14-79	306924	Transshipment of in-bond merchandise: Limitations on private carriers
3- 9-79	307050	Entry: Printing pressess (668.15, 668.20, 851.60)
5-16-79	307027	Brokers: Purchase of customhouse brokerage business
5-16-79	307067	Entry: Whether refund of duty is permitted for death of imported birds placed in quarantine
6- 4-79	307002	Returning residents: Unaccompanied minors
2- 2-79	307012	Entry: Crude petroleum
		Value Branch
11-24-78	541548	Valuation: Appraisement of iron castings on basis of constructed value
12-15-78	541849	Valuation: Whether overtime costs, sales tax, and profit between unrelated parties are includable in computing cost of production for the purposes of item 807.00, TSUS
12-19-78	541628	Valuation: Constructed value: whether research and development costs are valued separately as assists; fee paid under licensing agreement
6-28-79	541567	Valuation: Determination of whether restricted market exists for certain sewing needles on the final list
		Commercial Fraud and Negligence Branch, Miscellaneous Penalties Branch
6-20-79	609392	Enforcement: Whether internal revenue taxes are considered Customs duties for the purposes of assessing and mitigating liquidated damages under 19 CFR 172.22-(d)(1)
5-25-79	609438	Enforcement: Guidelines for the cancellation of claims for liquidated damages incurred under carriers' bonds
5-25-79	609490	Temporary importation under bond: Acceptance of transportation and exportation entry as satisfaction of requirement to export under a temporary importation bond
		Restricted Merchandise Branch
1- 2-79	705884	Marking: Whether stabilization baking of certain transistors results in substantial transformation
11-22-78	705166	Bonds: Computation of amount of TIB bond for certain goods not marked with country of origin
11- 6-78	707801	Country of origin marking: Small semiconductors

Date of decision	File No.	Issue
10-17-78	707804	Prohibited and restricted importations: Motion pictures for public exhibition at festival
11-13-78	707193	Prohibited and restricted importations: Hacksaw blades subject to trademark restriction
11-13-78	708722	Prohibited and restricted importations: Negatives of textbooks
11-29-78	708928	Prohibited and restricted importations: Dolls subject to copyright restriction
11-17-78	708936	Country of origin marking: Plastic sink strainer
11-16-78	708945	Prohibited and restricted importations: Application of manufacturing clause of copyright law to book printed in Japan
11-13-78	709573	Prohibited and restricted importations: Luggage subject to trademark restrictions
11- 8-78	709585	Prohibited and restricted importations: Whether enzyme imported under brand name infringes trademark
11-24-78	709482	Prohibited and restricted importations: Copyright infringement: Whether stuffed dogs are substantially similar to cartoon character
11-13-78	709551	Country of origin marking: Eyeglass fronts, temples, and screws
11-28-78	709562	Prohibited and restricted importations: Trademark infringement: Cigarettes
11-30-78	709131	Prohibited and restricted importations: Copyright law: bilingual dictionary
12-13-78	709361	Country of origin marking: Untapped steel nut blanks
11-24-78	709570	Country of origin marking: Substantial transformation: electric motors
12-13-78	709645	Prohibited and restricted importations: Switchblade knives
12- 4-78	709659	Country of origin marking: Manhole covers
1-11-79	709387	Prohibited and restricted importations: Cuban cigars
1-19-79	709739	Country of origin marking: Watch crystals
2- 1-79	709691	Marking: Customs testing of fineness of gold articles
2-12-79	709784	Prohibited and restricted importations: Ethnically disparaging products
2-16-79	709788	Prohibited and restricted importations: Trade-mark infringement; cameras
3-13-79	709687	Prohibited and restricted importations: Magazines depicting child abuse in violation of the Customs obscenity law
3-23-79	709786	Marking: Whether United Kingdom is an acceptible country of origin marking for merchandise from the United Kingdom
3-16-79	709787	Prohibited and restricted importations: Pork sausages sent in the mail
3-15-79	709824	Prohibited and restricted importations: Sodium cyclamates

Date of decision	File No.	Issue
4-12-79	709664	Prohibited and restricted importations: Whether bingo tickets are prohibited as lottery tickets
6-11-79	709967	Brokers: Customs nonintervention in disputes between correspondent customhouse brokers as to sharing of brokerage fees; exception to rule
7-26-79	709610	Country of origin marking: Leather shoe uppers
7-24-79	709756	Prohibited and restricted importations: Copyright infringement: Stuffed animals
7-26-79	709897	Country of origin marking: Whether baggage trailers can be excepted from marking if ultimate purchasers certify as to knowledge of country of origin
6-20-79	709987	Exemptions: Whether foreign military personnel may enter and withdraw articles from warehouse for consumption duty-free
8-16-79	709755/ 710432	Country of origin marking: Hardship exceptions to marking requirements
8-14-79	709821	Country of origin marking: Automobile parts with pressure-sensitive labels
9-14 79	709301	Prohibited and restricted importations: Application of "manufacturing clause" of 1976 U.S. Copyright Law to book containing text and pictures
9-18-79	709696	Country of origin marking: Individual foil packages of prophylactics
9-25-79	709755/ 710432	Country of origin marking: Whether watch crystals packaged in envelopes with misleading markings may be excepted from marking requirements due to economic hardship
5-23-79	710043	Country of origin marking: Wool products and textile fiber products
4-12-79	710173	Prohibited and restricted importations: Quantities of liquor in violation of State law
4-27-79	710326	Exemptions: Whether the personal effects of a deceased U.S. citizen who has a resident of Mexico entitled to duty-free entry
4-23-79	710198	Entry: Clearance of baggage transported in transit through United States
6-11-79	710239	Marking: Exterior case markings with regard to imported wines
6-11-79	710324	Marking: Wire rope clips
6-11-79	710439	Entry: Authorization of blanket, duty-free entry for materials belonging to foreign government pursuant to item 842.10, TSUS
7-17-79	710485	County of origin marking: Whether imported photo album covers are substantially transformed, following importation, by the addition of American-made sheets and screw posts
7- 2-79	710585	Prohibited and restricted importations: Mace
6-25-79	710628	County of origin marking: Yarn to be dyed in Canada before being imported into United States

Date of decision	File No.	Issue
7-17-79	710679	Temporary importation under bond: Substitution of duty-free consumption entry for temporary importation under bond entry due to mistake of fact
5- 2-79	710263	Liquidation: Adequacy of posted notice
6-21-79	710657	Country of origin marking: Manhole covers and frames manufactured abroad to promulgation of revised marking rules
7-31-79	710403	Temporary importation under bond: Whether the voluntary tender of liquidated damages to satisfy the bond was a mistake of fact or excess deposit of money
7-16-79	710634	Prohibited and restricted importations: Trademark infringement; likelihood of confusion
6-28-79	710652	Entry: Effective date of Customs Procedural Reform and Simplification Act of 1978
8- 6-79	710373	Country of origin marking: Premium cobalt end mills imported in bulk
8- 3-79	710550	Generalized system of preferences: Ineligibility due to indirect importation from beneficiary country to United States
7-23-79	710557	Customs bonded warehouse: Eligibility of imported jet fuel for entry into Customs bonded warehouse
8- 3-79	710622	Entry: Whether refund of duty paid is warranted in the case of sugar contracted for prior to deadline for duty-free sugar importations, but shipped after deadline due to force majeure
8-16-79	710699	Country of origin marking: Truck tires
8- 2-79	710708	Country of origin marking: Whether the machining of semi-finished manhole cover frames constitutes a substantial transformation for purposes of granting an exception to marking requirements
8- 2-79	710850	Marking: Labeling of domestically produced beer which has been shipped abroad and then returned to the United States for sale
8- 1-79	710934	Copyright infringement: Cornhusk figures
8-28-79	710895	Country of origin marking: Manhole covers
9-11-79	710969	Country of origin marking: Abrasives in disc, sheet, and roll form
9-13-79	710306	Prohibited and restricted importations: Auto parts made in prison industrial work program
9-13-79	710688	Country of origin marking: Leather coats with label bearing both country of origin and domestic locale
9-25-79	710448	Marking: Stamping of bulk importations of beer
9-24-79	710659	Country of origin marking: Exception for flat glass to be sold to ultimate purchasers in marked containers
10- 3-79	710864	Country of origin marking: Towels cut and sewn in Mexico from material manufactured in India and Pakistan
9- 4-79	711031	Country of origin marking: Exterior case markings for wines and liquors

Date of decision	File No.	Issue
8-31-79	711125	Country of origin marking: Candy imported in tubs
9- 6-79	711131	Country of origin marking: Whether ink stamping of watch movements satisfies marking requirements
9-20-79	711069	Country of origin marking: Axe handles to be combined with axe heads of U.S. origin
9-18-79	711312	Conditionally free merchandise: "Tools of trade" exemption (810.20)
9-27-79	711056	Country of origin marking: Exception for hardship; use of end-user statements
9-27-79	711155	Country of origin marking: Whether the finishing, assembling, and packaging of magnifying glass components results in a substantial transformation
10-3 -79	711343	Country of origin marking: Substantial transformation of unmarked electrical conduit couplings imported in bulk pack
9-27-79	711355	Country of origin marking: Nuts, bolts, and rivets too small to be legibly marked
10- 3-79	711456	Nonresident exemptions: Personal effects (812.10)
10-30-79	711345	Entry: Late filing of entry summary due to corrections; time limits
10-22-79	711550	Prohibited and restricted importations: Wildlife products
11- 2-79	711562	Prohibited and restricted importations: Copyrights: Whether a work for hire, prepared for a foreign employer, may be granted an exemption to the manufacturing clause prohibitions even if the employee is an American
11- 5-79	711651	Country of origin marking: Orange juice concentrate, consisting of concentrate from Brazil and the United States and packaged in Canada
11- 8-79	711691	Country of origin marking: Exemption for circuit boards used in manufacture by ultimate purchaser

CLASSIFICATION AND VALUE DIVISION

3- 3-79	046526	Classification: Wall covering fabrics (256.05, 359.30, 359.40, 359.50)
11- 8-78	049772	Classification: Fringed edgings (347.33, 347.60, 353.50 357.70)
11- 8-78	049776	Classification: Industrial close weave fabric of manmade fibers (338.30)
8-16-78	051614	Classification: Shirt with overlaid yokes (382.00)
12-18-78	052497	Classification: Footwear upper tongue
11-21-78	052129	Classification: Agricultural implements (666.00)
1-24-79	052316	Classification: Tennis racket frames (734.86, 734.88)
5- 8-79	052571	Special appraisement: Whether the scribing and breaking of silicon wafers into chips is an alteration under item 806.20, TSUS

Date of decision	File No.	Issue
8-31-79	052188	Classification: Plastic garden hose nozzles (657.35 662.50, 680.20, 680.22, 772.15)
9-11-79	053907	Classification: Racquet ball nylon strings (734.88, 735.20)
11- 8-78	053362	Classification: Ceramic resistor rods (535.14, 686.10)
2-13-79	053257	Classification: Polycrystalline gallium phosphide granules (423.00, 632.84)
3- 3-79	053287	Classification: Wall coverings (256.05, 355.18, 355.25, 359.30, 359.50)
2-13-79	053973	Classification: Woman's blouse (382.00, 382.33)
2- 6-79	054046	Classification: Reed grass broom (222.64)
10-20-78	054179	Classification: Stoles; scarves
10-26-78	054822	Classification: Handbags of textile materials (706.24)
12-19-78	054374	Classification: Furniture webbing (349.25, 355.82, 774.25)
12-19-78	054914	Classification: Oil well casing (607.02, 610.42, 610.43)
1- 8-79	054431	Classification: Tents (735.20)
11- 3-78	055260	Classification: Artists' canvas
9-25-79	055296	Classification: Steel swage nuts (646.42, 646.56)
9-13-79	055388	Classification: Steel tool boxes (640.30, 706.60)
5-10-79	055270	Classification: Shipping containers (385.53, 772.20)
6-22-79	055289	Classification: Woven polypropylene material (355.82, 389.60)
5-25-79	055443	Classification: Woven fabric (355.82, 389.62)
6-18-79	055258	Classification: Electronic clock movement portion of clock radio (720.02)
11- 7-78	055305	American selling price: Women's casual, slip-on, open-toe, open-back sandal with medium wedge bottom and upper of rope and plastic (700.60)
12-19-78	055052	American selling price: Footwear; joggers
12-21-78	055282	Classification: Yarn conditioning machine (670.43)
11- 7-78	055336	Classification: Bastnasite, a rare earth fluocarbonate (806.30)
11-21-78	055295	Classification: Jogging shoes; American selling price
11- 6-78	055308	Classification: Wire weaving machine (670.74, 678.50)
10-30-78	055331	Classification: Toddler's slipper boot; American selling price
11- 8-78	055345	Classification: Toy book/safe bank; combination telescope-microscope (708.89, 737.95)
1-11-79	055365	Classification: Wooden flower/plant holders (206.98, 207.00)
10-25-78	055233	Valuation: American selling price; training shoe
11- 8-78	055317	Classification: Generator heads and remote registers for water meters (713.15)
1-26-79	055334	Classification: Bowling ball polisher (385.30, 386.50)
11-22-78	055355	Classification: Wooden nutcracker doll (737.22)
12-18-78	055357	Classification: Vinyl sandal uppers (700.58, 774.60)
12-18-78	055374	Classification: Thongs with macrame uppers; American selling price (700.60)

Date of decision	File No.	Issue
1-25-79	055391	Classification: Coir yarn (315.70, 387.30)
1-11-79	055360	Classification: Ornamented knit blouse (382.00, 382.06)
11-22-78	055200	Classification: Soapstock, a vegetable tallow byproduct (184.75, 465.30)
12-22-78	055235	Classification: Oven mitts or potholders (366.79, 386.50)
12-20-78	055277	Classification: Undershirts having substantial use as outerwear (378.15, 380.06)
12-20-78	055278	Classification: Pullover with zig-zag stitching on collar and capping (382.04, 382.78)
12-20-78	055343	Classification: Raincoat with scarf-like extensions on hood (382.00)
12-27-78	055342	Classification: Kite (737.85)
12-26-78	055356	American selling price: Hot dog upper
12-19-78	055375	American selling price: Women's casual footwear
12- 8-78	055376	American selling price: Footwear; thong sandal
12-27-78	055381/ 055382	Classification: Canvas handbags (706.20, 706.22)
1-25-79	055411	Classification: Leather footwear (700.45, 700.60)
3- 8-79	055401	Classification: Western-style shirt (382.33)
1-24-79	055406	Classification: After-ski boots (700.45, 700.60)
1-23-79	055483	American selling price: Footwear
2- 6-79	055202	Classification: Lengths of catgut (190.25, 734.88, 792.22, 735.20)
2-28-79	055209	Classification: Unstuffed animal heads used to make novelty pillows (367.55, 737.40)
1-30-79	055290	Classification: Nylon tents (389.60, 735.20)
2-26-79	055344	Classification: Denim jeans (380.00)
3- 7-79	055368	Classification: Motor vehicle lighting equipment (653.39, 683.65)
3-13-79	055371	Classification: Baseball batting gloves (704.85, 705.48, 705.67, 734.56, 735.05)
2-28-79	055450	Classification: Plastic transfer cards (273.75, 774.60)
3- 1-79	055452	Classification: Sandal; ASP (700.60)
3-15-79	055480	Classification: Raincoats (382.00, 382.12)
3- 8-79	055482	Classification: Tubes and fittings (771.55, 772.65, 774.60)
3-15-79	055485	Classification: Drapery tiebacks; like furnishings (365.78, 365.86, 386.04, 386.08)
5- 8-79	055404	Valuation: Whether a reduced price closeout sale to a related selected purchaser fairly reflects the market value for the purpose of determining export value
2-26-79	055451	Classification: Scissors; needles; cotton thread; safety pins; plastic buttons (303.20, 650.91, 651.05, 745.34, 745.56)
3- 1-79	055475	American selling price: Woman's sandal (700.60)
2-15-79	055490	Classification: Gold coins (653.22)
3-26-79	055390	Classification: Continuous cast steel in dimensions meeting the definition of ingots (608.16)
4-10-79	055373	Classification: Tungsten carbide inserts for files (649.41, 649.53)

Date of decision	File No.	Issue
4–17–79	055438	Classification: Lace fabric (351.80, 386.08)
4–17–79	055344	Classification: Lace fabric (351.80, 386.08)
12–13–78	055399	Classification: Dolls based on motion picture characters (737.22, 737.40)
1–26–79	055361	Classification: Calculator game (676.20, 676.25, 688.40, 734.20)
4–18–79	055489	American selling price: Sandal (700. 60)
8– 2–79	055066	Classification: Motion picture projector (722.42, 722.44)
8– 1–79	055429	Classification: Game machine (734.20)
8–21–79	055325	Classification: Flower and herb seedmats (126.41, 127.10, 799.00)
8–30–79	055437	Classification: Whether double needle stitching along front opening of raincoat constitutes ornamentation
8– 1–79	055446	American selling price: Similarity between imported and domestic athletic shoes (700.60)
3– 8–79	061009	Classification: Sweater with tie-string (382.04)
3–12–79	061012	American selling price: Athletic shoe (700.60)
2–22–79	061026	Classification: Ornate-type bathroom fixtures (546.52 through 546.59)
3– 8–79	061006	Classification: Garments with embroidered trademark emblems on exterior; ornamentation
3–15–79	061066	Classification: Wooden table tops with aluminum legs (206.98, 207.00, 653.51, 654.10)
4–11–79	061029	Classification: Mittens (705.86, 734.99, 735.05)
4–17–79	061031	Generalized system of preferences: Chemical intermediates
3–30–79	061129	Classification: Dies and molds (801.00, 864.55)
4–18–79	061160	Classification: Stuffed monkey-like figures (737.30)
4–19–79	061173	American selling price: Boots (700.60)
5– 8–79	061010	Classification: Fabrics exported for vinyl lamination process and returned (807.00)
5– 9–79	061277	Classification: Fiber optic cable; fiber optic couplers (708.29, 708.89, 807.00, 851.60)
5–25–79	061008	Classification: Cotton denim jeans with T-pockets (380.00, 380.39)
4–19–79	061027	Classification: Rectangular tubing, stress relieved (610.39, 610.42)
5–17–79	061149	Classification: Notification of increased duties
6–27–79	061195	Valuation: Whether payments to buying agent form part of dutiable value of certain wearing apparel
5–18–79	061011	American selling price: Men's casual closed-toe, closed-back, oxford-type tie shoe with medium heel and woven fabric upper (700.60)
5–25–79	061030	Generalized system of preferences (GSP): Whether tetramisole, an intermediate product in the manufacture of a GSP-eligible article, is a substantially transformed constituent material
6–29–79	061117	Classification: Whether a label on a garment constitutes ornamentation

Date of decision	File No.	Issue
5-24-79	061197	Classification: Cartoon figures (737.45, 737.50, 771.42)
5-24-79	061215	Classification: Cookie garland (772.95, 772.97)
7-11-79	061290	Classification: Heat transfer emblem (389.50, 389.62)
6- 8-79	061384	Classification: Racing cars exported for racing (802.30)
7-17-79	061023	Classification: Dental powders (523.81, 540.21)
5-11-79	061204	Classification: Light source (722.18)
6-25-79	061252	Classification: Hospital supplies imported duty-paid, exported for sales meeting, and reimported (800.00, 802.10, 802.30)
6-19-79	061288	American selling price: Closed-toe, closed-back slippers with plastic bottom and upper of manmade fibers (700.60)
6-19-79	061327	Classification: Music boxes (725.50, 737.80)
7-19-79	061339	Classification: Linen tote bag (386.09, 706.23)
6-28-79	061346	American selling price: Open-toe, open-back slipper (700.60)
6-22-79	061355	American selling price: Women's open-toe, open-back, sling back shoe with high wedge and woven fabric upper (700.60)
7- 9-79	061402	Classification: Domestic sewing thread used to assemble American-made fabric components abroad (807.00)
7-19-79	061406	American selling price: Women's slipper with velvet upper (700.60)
7- 9-79	061434	Classification: Glass candleholders (545.57, 546.52-546.59)
8-10-79	061105	Classification: Miniature plastic roulette wheels (734.15, 734.20, 735.20, 737.90, 737.95)
7-24-79	061347	Classification: Push-pin assemblies for electronic watches (685.90, 720.26, 720.30, 720.75)
8-10-79	061365	Classification: Plastic animals on skateboards (737.40, 737.95)
7- 6-79	061421	Classification: Tiles imported for community center (862.10)
7-30-79	061427	Classification: Umbrella tote bag (389.62, 706.24)
8- 2-79	061436	Classification: Opal triplets (520.39, 740.38)
8- 6-79	061437	Classification: Whether a label on jeans constitutes ornamentation
7-30-79	061479	Classification: Tiles imported for community center (862.10)
8-10-79	061005	Classification: Yarn conditioning machine (670.06, 670.43)
8-10-79	061015	Classification: Football game (734.20, 737.95)
7-11-79	061089	Classification: Outerwear garments (376.56, 380.04, 772.30)
8- 7-79	061141	Classification: Plastic-coated wire (609.45, 642.97)
8-20-79	061158	Classification: Radio-doll combinations (685.24, 688.40)
8-10-79	061253	Classification: Motion picture film, sensitized, but not exposed (723.05, 723.10)
8- 1-79	061361	American selling price: Casual footwear (700.60)

Date of decision	File No.	Issue
9- 5-79	061143	Classification: Mandrels (649.49, 657.25, 680.15)
9-11-79	061157	Classification: Galvanized tension bars and gate rods (608.48, 657.25)
8-10-79	061265	Classification: Transmissions for concrete mixers (678.20, 680.44, 692.16, 692.27)
9-11-79	061337	Classification: Artificial fir trees (748.20, 737.07, 737.15)
8- 1-79	061359	American selling price: Rubber boot with felt liner (700.60)
8-29-79	061409	Classification: Bridge sections (646.54, 652.94, 652.98, 657.20)
8-28-79	061410	Classification: Comic figures of humans (737.22, 737.40)
8-21-79	061441	Classification: Plastic blanket bags (706.60, 772.20)
8-27-79	061492	Classification: Ankle and wrist weights (735.20)
8-28-79	061497	Classification: Cloisonne wares (653.75, 653.80, 654.05)
8-28-79	061561	Classification: Whether a crane imported in several shipments may be classified as an entirety
9-11-79	061583	Classification: Rayon tote bag laminated with plastic lining; umbrella (389.62, 751.05)
9-11-79	061078	Classification: Watch cases; bracelets (720.24, 740.10, 740.34, 740.35)
9-13-79	061139	Classification: Radio control toy vehicles (737.95)
9-19-79	061154	Classification: Communications output multiplexer (685.29, 737.15)
9-17-79	061428	Classification: Pullover knit shirt; woven scarf (372.15, 382.00)
9-12-79	061439	Classification: Whether double needle stiching along front of raincoat constitutes ornamentation
9-20-79	061449	Classification: Applicability of distilled spirits excise tax on importations of nitrocellulose packed in ethyl alcohol
9-17-79	061469	Classification: Whether a wall covering qualifies as a textile (355.65, 772.70)
9-20-79	061562	Generalized system of preferences: Whether the molding of pelletized plastic onto wiring to form grommets and terminal insulators results in substantially transformed constituent material
9-27-79	061579	American selling price: Similarity between imported woman's casual shoe and domestic footwear (700.60)
9-14-79	061256	Classification: Tote bag designed to carry tennis balls, rackets, and clothing (389.62, 706.25, 734.88)
9-14-79	061403	American selling price: Children's animal character slippers (700.60)
9-14-79	061426	Classification: Spark detection and extinguishing system (662.50, 683.10, 685.90, 712.05)
9-13-79	061474	Classification: Chemical dosage control unit (712.05, 712.49)
9-27-79	061000	American selling price: Athletic footwear (700.60)
10- 5-79	061336	Classification: Raffia garland (222.62, 748.21)

Date of decision	File No.	Issue
9-26-79	061360	Classification: Drawn, chrome-plated steel intended for use as barbecue grill axle (609.41, 609.43, 609.45, 653.52, 657.25)
10-10-79	061387	Valuation: Interpretation of phrase "at a time preceding the date of exportation" with respect to constructed value appraisement
9-27-79	061405	American selling price: Women's casual footwear consisting of open-toe, open-back, sling-back shoe with medium wedge and upper of woven/knit fabric (700.60)
10- 5-79	061440	Classification: Dog brushes (750.47, 750.70)
9-27-79	061489	American selling price: Men's casual, closed-toe, closed-back, slip-on shoe with medium wedge and fabric upper (700.60)
10-11-79	061511	Classification: Blue jeans with triple stitching and hammer loop (382.00)
10- 5-79	061548	Classification: Magnesium scrap (628.55)
10- 2-79	061645	Classification: Electronic target game (734.20)
10-31-79	061338	Classification: Whether flax material, garnetted and cut, constitutes advanced waste (304.12, 304.18)
10-31-79	061556	Classification: Whether textile loops on the ends of of drawstrings on infants' garments are ornamental
11- 5-79	061050	American selling price: Woman's open-toe, open-back sandal with jute-covered wedge (700.60)
11- 7-79	061461	American selling price: Woman's open-toe, open-back slip-on casual shoe with medium wedge and plastic/rubber sole (700.60)
11- 7-79	061470	American selling price: Woman's casual open-toe, open-back, ankle-strap shoe with medium wedge and woven fabric upper (700.60)
10-22-79	061495	Classification: Motocross gloves (705.70, 705.35, 735.05)
11- 7-79	061540	American selling price: Woman's casual, open-toe, open-back, ankle-strap shoe with medium wedge and canvas upper (700.60)
11- 9-79	061557	American selling price: Men's casual, closed-toe, closed-back, slip-on shoe with unit molded plastic sole and upper of woven/knit fabric (700.60)
11- 7-79	071699	American selling price: Distinction between sale of polyvinyl chloride and rubber in athletic shoe

SPECIAL PROJECTS AND PROGRAMS BRANCH

10-13-78	055611	Generalized system of preferences: Substantial transformation: Plastic resin pellets subjected to a standard thermal injection process
11- 3-78	055625	Generalized system of preferences: Substantial transformation: Plastic parts of toys produced from raw plastic materials by means of a thermal injection molding process

Date of decision	File No.	Issue
11-22-78	055629	Classification: Cloth with pile construction (346.60, 346.90)
2- 6-79	055635	Classification: Solid-state control system for automatically securing motor vehicles (685.90)
3-14-79	055660	Generalized system of preferences: Substantial transformation of constituent materials used in the manufacture of GSP-eligible refractory kiln furniture
4- 2-79	055675	Generalized system of preferences: Whether costs of materials used in producing an article in one beneficiary developing country are includable in the 35 percent value-added requirement if the materials were produced in another beneficiary developing country
8-14-79	055684	Generalized system of preferences: Whether the cutting, bending to shape, drilling or stamping, and swaging of metal tubing and sheeting into components of a gas absorption unit result in materials produced in a beneficiary developing country
8-15-79	055694	Generalized system of preferences: Whether cutting of fabric into specific shapes is a substantial transformation
9-24-79	055703	Generalized system of preferences: Whether milling, polishing, and hardening of drop-forged surgical instruments results in a substantial transformation
8-27-79	055708	Generalized system of preferences: Whether melamine molding compound, which is imported into a beneficiary developing country and molded into dinnerware, is a substantially transformed constituent material includable in 35 percent requirement
8-14-79	055722	Generalized system of preferences: Whether machining of steel bar stock into gear blanks results in substantially transformed constituent materials
9-18-79	055726	Generalized system of preferences: Whether processing by cutting, bending, and crimping wire to form trigger pins, which are used in the production of spring rings, results in substantial transformation
10-18-79	055563	Generalized system of preferences: Denial of America manufacturer's petition for withdrawal of duty-free entry for disposable butane lighters from Hong Kong
10-30-79	055719	Generalized system of preferences: Whether royalty payments, financial fees, salary and travel expenses for a production manager and technical consultant, and other production costs are direct costs of processing operations

MANUFACTURES CLASSIFICATION BRANCH

11- 2-78	056649	Classification: Sandals; American selling price
10-12-78	056614	Classification: Steel lock and key mechanisms

Date of decision	File No.	Issue
11- 2-78	056821	Classification: Pressure injected polyurethane sandwich panels
10-18-78	056940	Classification: Dip slide for the diagnosis of urinary tract infections
2- 2-79	056927	Classification: PVC sheets with textile inserts (359.50, 771.42)
1-24-79	056930	Classification: Hearth brushes (750.32, 750.70)
6-11-79	056469	Classification: Hog bristle brush heads (750.45, 750.47, 792.75)
6-22-79	056949	Classification: Game machine for spelling (734.20)
10- 4-78	057150	Classification: Magnetic soap holder with ceramic magnet
10-30-78	057227	Classification: Electronic pocket calculator with time function
10-27-78	057424	Classification: Paint sprayer
11-20-78	057228	Classification: Stainless steel tubing (610.36, 610.37, 692.28)
10-30-78	057237	Classification: Pile lined boot (700.60)
11- 3-78	057255	Classification: Pneumatic valve and valve parts (652.88, 657.25, 680.27, 682.90)
10-30-78	057284	Classification: PVC hog flooring (666.00, 774.60)
11-28-78	057303	Classification: Lifting block; welding table; ski pole parts; yeast packing machines; hand planes; folding rules (664.10, 734.99, 662.20, 651.29, 651.31, 710.67, 710.68)
11-21-78	057306	Classification: Plastic masking tape (309.20, 309.21, 774.60)
11- 7-78	057323	Classification: Lambskin gloves (705.46)
11- 7-78	057333	Classification: Zinc wire (626.30, 626.31)
11-21-78	057345	Duty assessment: Dutiability of running repairs to truck tractor and trailer
10-30-78	057362	Classification: Measurement of exterior surface of footwear uppers
11-21-78	057382	Classification: Footwear components (700.58, 774.60)
11-17-78	057392	Classification: Zinc alloy (626.22)
11-16-78	057399	Classification: Grinding balls (678.20)
11- 2-78	057404	Classification: Injection molding machines; vulcanizing presses (661.70, 678.35)
11- 3-78	057419	Classification: Plastic trays used in incubators; mold (666.00, 680.12)
10-30-78	057428	Classification: Gold bars (605.20)
11-21-78	057431	Classification: Shoe-skate (700.83, 734.90)
11-15-78	057433	Classification: Sandal (700.60)
11-27-78	057453	Classification: Sandal (700.80)
11-15-78	057452	Classification: Electric tooth polisher (683.32)
11- 2-78	057453	Classification: Fur monkey (737.35, 737.95)
11-15-78	057461	Classification: Plastic downspout pipes (772.65)
11- 1-78	057464	Classification: Toy sound box (688.40, 737.95)
11- 3-78	057466	Classification: Footwear uppers (386.04, 386.08, 386.50, 389.62, 774.60, 791.25)

Date of decision	File No.	Issue
11-15-78	057474	Classification: Wood desk (727.35)
11-15-78	057488	Classification: Shoe components (770.80, 774.60)
11- 3-78	057489	Classification: Latex gloves (705.83)
11-16-78	057499	Classification: Country of origin: Sandals
11- 8-78	057503	Classification: Chains (652.35)
11-17-78	057513	Classification: Castings for motor cases and rotors (682.60)
11-15-78	057515	Classification: Steel tubes (610.49)
11-17-78	057537	Classification: Gas igniter (688.40)
11- 2-78	057092	Classification: Welding wire of tin and lead alloy (622.20, 624.30)
12-19-78	057164	Classification: Shoe components; polyurethane sole unit; elasticized woven fabrics; leather strap; shoe buckler; plastic bag; cardboard carton (256.52, 256.54, 349.25, 700.60, 745.45, 770.40, 772.20, 791.25)
12-18-78	057210	Classification: Shears (650.91)
11- 6-78	057296	Classification: Microprocessor (713.11)
11-21-78	057298	Classification: Plastic netting (666.00, 771.42, 774.60)
11-21-78	057304	Classification: Mincer blades (657.25)
11-15-78	057346	Classification: Hydraulic governors (660.40, 660.92, 711.84, 712.49)
12- 7-78	057349	Prohibited and restricted importations: Butterfly knife
11-22-78	057357	Classification: Pressure-sensitive stickers (790.55)
1-24-79	057310	Classification: Gold chain necklace; chain in lengths (740.10, 740.70)
11- 3-78	057130	Classification: Children's hand generator light (737.95)
12-26-78	057161	Classification: Gloves (705.35, 735.05)
9-14-78	057149	Classification: Hydroelectric powerplant (652.98, 657.25, 678.50, 682.60)
12-27-78	057376	Classification: Bingo chip dispenser (735.20)
1-23-79	057386	Classification: Adhesive-backed articles of textile (389.50)
12-29-78	057416	Classification: Hologram (740.10, 740.38, 741.35)
12-19-78	057427	Classification: Tea strainer spoon (653.94, 654.00)
10-25-78	057426	Classification: Nutcracker dolls (737.22)
12-26 78	057554	Classification: Polyurethane hose protectors (774.60)
12-27-78	057626	Classification: Ski gloves (734.99)
1- 8-79	057681	Classification: Hand puppet (737.95)
1- 9-79	057654	Classification: Ski gloves (734.99)
1-23-79	057621	Classification: Open-thong sandal (700.60)
1-22-79	057698	Classification: Semifinished press plates (608.85, 678.35, 923.20)
1-23-79	057710	Classification: Tandoor, an aluminum and steel cooking pot (654.10)
1-26-79	057351	Classification: Plastic food containers (772.03, 772.06, 772.15)
12-19-78	057565	Classification: Bamboo handbags (706.10)
1-23-79	057701	Classification: Jig-saw puzzle (735.20)
1-26-79	057724	Classification: Polyethylene-lined drums; packing

Date of decision	File No.	Issue
2- 8-79	057157	Classification: Hay movers (692.60, 666.00)
2-28-79	057184	Classification: Palm-leaf straw shopping bags (222.42, 706.12)
12-26-79	057200	Classification: Cow teat sanitizer (662.45)
3- 9-79	057307	Classification: Polyethylene sheets (355.82, 744.60)
2- 6-79	057352	Classification: Toy construction set (737.09, 737.55, 737.95)
3- 9-79	057329	Classification: Ticket dispensing traffic control device (274.75, 274.90, 653.20, 676.25, 676.52)
2- 6-79	057375	Classification: Hasp device for cabinets (647.03)
3- 8-79	057377	Classification: Plastic reed baskets (706.60, 772.15)
11-21-79	057389	Classification: Yarn beams (657.40, 670.74)
3-12-79	057439	Classification: Fireplace bases (653.94)
12-26-78	057451	Classification: Sandal (700.60)
2-27-79	057468	Classification: Bicycle parking rack (727.55)
3-13-79	057485	Classification: Polyethylene fabric (355.82, 666.00, 774.60)
2-13-79	057494	Classification: Shaved wood rose (748.21)
3- 2-79	057506	Classification: Fry tank (653.51, 653.94, 684.50)
3- 2-79	057533	Classification: Propane-fired construction heater (661.70, 678.50)
1-14-79	057552	Classification: Hot water pressure relief valve; water pressure reducer; manometer (680.27, 711.84)
3- 9-79	057560	Classification: PVC-impregnated glove (705.85)
3- 9-79	057564	Classification: Wire display hook (653.94, 657.25)
2- 5-79	057567	Classification: Marble floor tiles with polyester resin binding (728.25, 771.55)
2-27-79	057591	Classification: Shear knives (649.43, 649.46, 649.67)
2-16-79	057707	Classification: Football shoe (700.60)
3- 9-79	057814	Classification: Gloves (704.85)
3-12-79	057922	Classification: Kayak skin (696.40)
3-13-79	057974	Classification: Men's casual mesh shoe (700.60)
3- 8-79	057977	Classification: Men's desert boot (700.58)
3- 5-79	057293	Classification: Dewatering system (657.25, 664.10, 678.50, 685.90, 688.15)
3- 7-79	057518	Classification: Tube bender machine (649.43, 649.49, 674.35, 674.50, 674.53)
3-22-79	057706	Classification: Kitchen butcher knives (650.15, 650.21)
3-21-79	057875	Classification: Threaded steel rod (608.45-608.50, 657.25)
4- 2-79	057925	Classification: Heat-shrinkable seamless tubing (771.55)
3-26-79	057947	Classification: Gas-fired room heaters; wall furnaces (653.52)
4-13-79	057631	Classification: Portable saw mill (674.42)
4- 2-79	057407	Classification: Galvanized steel sheets (608.95, 657.25)
3-13-79	057498	Classification: Textile cover for heating pad (367.50, 389.40, 684.50)
3-15-79	057504	Classification: Production line machinery for making

Date of decision	File No.	Issue
		plastic sheeting (661.70, 662.26, 664.10, 678.50, 685.90, 712.49)
4-10-79	057528	Classification: Toy house (245.30, 735.20, 737.95)
4-10-79	057541	Classification: Plastic figure of a turkey (737.40, 737.70, 773.10)
5- 2-79	057587	Classification: Chromatography equipment (547.55, 661.68, 711.88, 712.49)
4-13-79	057597	Classification: Food baller and dispenser machine (666.25, 683.32)
4-13-79	057628	Classification: Aluminum structural members used in bridges and roofing structures (652.94, 652.98)
3- 8-79	057689	Classification: Tee watcher (389.50, 734.77, 737.95)
3-15-79	057693	Classification: Automobile lamp cover (692.27, 774.60)
3- 5-79	057733	American selling price: Women's footwear (700.60)
3-22-79	057846	Classification: Garage creepers (207.00, 657.09-657.25, 692.60)
3-15-79	057857	Classification: Hydraulic painting arm (662.50)
4-12-79	057874	Classification: All-terrain cycles (692.10, 692.50)
3-26-79	057938	Classification: Security chain door latch (646.92, 647.03)
4-19-79	057864	Classification: Vinyl golf shoe (700.53)
4-18-79	057948	Classification: Woman's sandal (700.58)
4-18-79	057975	Classification: Footwear (700.60)
3- 2-79	057144	Classification: Carrying case (706.60, 734.15)
4- 3-79	057242	Classification: Grain and animal feed transfer unit (666.00)
4-17-79	057311	Classification: Railroad car pedestal castings (657.09, 657.20, 690.35)
4-25-79	057633	Classification: Knife block; knives (206.98, 650.21)
4-18-79	057737	Classification: Stick-ons; snap-together toy figures (389.50, 737.40)
4-17-79	057873	Classification: Creping blades (649.67, 668.06)
4-19-79	057909	Classification: Nylon house booties for women (700.60)
4-13-79	057963	Classification: Roll label printing press (668.02, 668.20, 678.50)
4- 9-79	057698	Classification: Semifinished press-plates (678.35)
4- 6-79	057916	American selling price: Footwear (700.60)
3-26-79	057940	Classification: Folding baby bed (727.48, 727.55)
6-22-79	057773	Classification: Plastic sheeting laminated to textile backing (355.81, 355.82, 359.50)
6- 1-79	057904	Classification: Peat (480.80)
5-10-79	057924	Classification: Screw tack spikes (646.30, 646.49)
4-17-79	057932	Classification: Production line; extruder; quenching bath; stretching equipment (661.68, 678.35)
5- 4-79	057972	Classification: Icemaking machine (661.35)
6-27-79	057986	Classification: Synthetic leather (355.25, 355.65, 355.81, 355.82, 359.50)
5-24-79	057270	Classification: Handbags and shopping bags of plastic distinguished (706.60, 774.60)

Date of decision	File No.	Issue
5- 4-79	057374	Classification: Sterilizer (661.70, 683.32)
5-10-79	057415	Classification: Molded clipboard pallets (204.30)
6- 1-79	057895	Classification: Hooks; coupling links; master links; chain slings (652.24-652.35, 657.25, 664.10)
5-16-79	057906	Classification: Steam facial appliance (684.20, 684.50, 772.15)
6-28-79	057961	Classification: Nylon travelers used in textile machinery (670.68)
5-31-79	057973	Classification: Buffer shotgun cartridge; anticorrosive chemical (425.52, 657.40)
6-22-79	057299	Classification: Mining and construction vehicles (664.05, 692.03, 692.10, 692.11, 692.16)
6-19-79	057356	Classification: Marine hardware (680.50, 696.15)
6-22-79	057478	Classification: Cylinder sleeves (607.01, 607.02, 610.52, 610.58)
6-22-79	057516	Classification: Vinyl game cloth (734.15, 771.42)
6-10-79	057580	Classification: Signs (652.75, 657.20, 657.40, 774.60, 790.55)
6-22-79	057629	Classification: Floor drain module (648.97, 680.22)
7-23-79	057777	Classification: Fiberglass silos (770.07, 770.10)
7-11-79	057811	Classification: Suede shearling garments (791.15, 791.76)
6-19-79	057860	Classification: Cattle hoof trimming chute (666.00)
7- 9-79	057934	Classification: Name holder with safety pin (740.30, 740.38)
8- 7-79	057467	Classification: Tin/lead anodes; welding rods; soldering wire (622.20, 622.25, 622.32, 624.30, 624.32, 657.60)
8- 2-79	057812	Classification: Decorative horse figures (737.40, 773.10)
8- 2-79	057876	Classification: Steel stud (646.57)
8-10-79	057945	Classification: Profile figures (523.91, 774.60)
8-10-79	057994	Classification: Audio cassette case of plastic (706.60, 772.15, 772.20, 774.60)
8- 9-79	057236	Classification: Liability of motor vehicle manufacturers as importers for the value of parts diverted for use other than as original motor vehicle equipment
8-20-79		Classification: Acrylic sheets (771.42)
7-30-79	057677	Classification: Wood waste burning and recy system (610.49, 610.80, 652.00, 653.52, 657.25, 660.10, 661.10, 661.25, 664.10, 678.50)
8-20-79	057713	Classification: Combination measuring and drawing instrument (710.80, 760.48, 774.25, 774.60)
8-16-79	057798	Classification: Plastic gloves (705.86, 734.97, 734.99)
7-24-79	057817	Classification: Leather gloves (705.35, 735.05)
7-30-79	057845	Classification: Electroplating machine (678.50)
8-20-79	057559	Classification: Word games (734.15, 735.20)
8-31-79	057684	Classification: Automatic buckle and combination folding machine (678.50)
8-27-79	057763	Classification: Whether barge kit is considered an unfinished vessel

Date of decision	File No.	Issue
8-20-79	057795	Classification: Unfinished leather handbag imported in cut pieces (706.08, 791.90)
7-30-79	057807	Classification: Ballpoint pen-game combination (737.95, 760.05)
8-20-79	057851	Classification: Suppressed spark plug connectors (683.60, 686.10)
9-17-79	057398	Classification: Toy incorporating radio, console, headphones, microphones (737.95)
9-17-79	057813	Classification: Refrigerated cargo container (640.30, 661.35)
9-14-79	057878	Classification: Fourdrinier wires (358.50, 642.30, 668.06)
9-26-79	057224	Classification: Grain drying bins; bin floors (652.99)
9-25-79	057650	Classification: Pneumatic piston vibrators (664.10)
9-21-79	057878	Classification: Attache cases with battery-operated radio and anti-robbery pin (706.60)
10- 5-79	057030	Classification: Combination ice scraper and brush (750.70, 774.60)
10-18-79	057483	Classification: Down-filled gloves (705.35, 734.99, 735.05)
10-16-79	057943	Classification: Particle boards (222.64)
10- 2-79	057979	Classification: Toy figure of imaginary creature (737.95)
4-18-79	062014	Classification: Canvas tote bag (386.50, 706.22)
4-10-79	062027	Classification: Central heating fireplace (653.45, 653.50, 653.51, 653.55)
4-18-79	062081	Classification: Gold coins; gold bullion (605.20, 653.22)
5- 4-79	062047	Classification: Fleshing machine (678.50)
6-22-79	062048	Classification: Hypodermic needle tubing; hypodermic needles (607.01, 607.02, 610.52, 709.23)
5-24-79	062045	Classification: Tricot boot liner (700.60)
5-23-79	062146	Classification: J-bolts (646.54, 646.72)
6-19-79	062071	Classification: Leather gloves (705.35, 734.77)
6-19-79	062078	Classification: Automatic watering system (666.00)
6-19-79	062090	Classification: Platinum wire gauze (605.08, 642.45-642.88, 656.05, 656.10)
7-24-79	062111	Classification: Cotton apron with loops holding small plastic garden tools (737.95)
7- 9-79	062140	Classification: Nurses' caps (703.15)
6-19-79	062166	Classification: Saw blade (649.25)
6-28 79	062244	Classification: Tubing sets for bicycles (732.39, 912.10)
7-24-79	062249	Classification: Flocked animal figures; yarn doll (737.22, 772.15)
6-28-79	062276	Classification: Batter's glove of manmade fibers and vinyl (705.86, 734.56)
6-28-79	062277	Classification: Gloves (705.85)
7-30-79	062332	Classification: Molded plastic footwear bottom (774.60)
7-30-79	062403	Classification: Drum log (657.25)
7-10-79	062406	Classification: Erasers (774.25, 774.60)
6-28-79	062408	Classification: Fence energizer to control livestock (666.00, 688.40)

Date of decision	File No.	Issue
7- 3-79	062417	Classification: Skylights (652.99, 774.60)
7-17-79	062438	Classification: Soldering guns and irons (682.60, 683.95)
7-30-79	062016	Classification: Impulse testing equipment (682.60, 685.90, 686.10, 688.40, 712.49)
8- 2-79	062097	Classification: Nylon hardwaste (771.15)
8-10-79	062127	Classification: Santa Claus figures; Christmas decorations (737.22, 737.40)
7-30-79	062188	Classification: Unfinished punch blank (649.43, 649.49)
8- 2-79	062195	Classification: Mulching planter (666.00)
8-10-79	062240	Classification: Rail units for hospital wall equipment (548.05, 657.40, 680.20, 680.22, 711.84)
8-10-79	062255	Classification: Cartoon stick-on decals (737.95)
7-30-79	062264	Classification: Fabricated air reservoir for air-brake system (690.15, 690.35, 690.40)
7-30-79	062284	Classification: Hand-beaded rosette (741.50)
8- 7-79	062296	Classification: Dispenser for liquid fabric softener (772.15)
7-30-79	062300	Classification: Egg viewer (688.40)
8-10-79	062327	Classification: Sandal (700.58)
7-30-79	062363	Classification: Rail diesel car (690.05, 690.10)
7-30-79	062375	Classification: Cartridges for centrifuges (661.95)
8- 7-79	062386	Classification: Combination toy and teether for infants (737.95)
8-10-79	062414	Classification: Leveling platforms; pallet trucks; hand trucks (657.25, 664.10, 692.60)
7-30-79	062449	Classification: Gang mower (666.60)
7-30-79	062006	Classification: Bean bag toy (737.40, 737.95)
7-30-79	062158	Classification: Mouse figure (737.40)
8-17-79	062191	Classification: Bar and wire rod distinguished
7-30-79	062326	Classification: Down-filled bootie (700.60)
8-16-79	062345	Classification: Sandal (700.60)
9- 5-79	062004	Classification: Extrusion machine; winding machine; cut-off machine (674.35, 678.50)
8-20-79	062005	Classification: Plastic wind deflector (692.27, 774.60)
8- 6-79	062041	Classification: Boot with removable liner (700.60)
7-30-79	062093	Classification: Nonwoven textile fabric swabs (355.25)
8-27-79	062162	Classification: High heel dress sandal for women (700.60)
8-16-79	062226	Classification: Gold bars (605.20, 656.10)
8-27-79	062235	Classification: Visual effects plastic sheeting (771.42, 774.60)
8-28-79	062258	Classification: Electric fence system (646.54, 657.25, 666.00, 682.60, 712.49)
8-27-79	062266	Classification: Airport runway lighting (653.39, 682.05, 682.07, 686.24)
8-28-79	062268	Classification: Honey processing equipment (640.35, 657.25, 661.95, 662.20, 666.00)
8-21-79	062272	Classification: Work glove (704.40, 705.85)
8-20-79	062317	Classification: Rotating disco lights (545.67, 653.39, 678.50)

Date of decision	File No.	Issue
8- 2-79	062364	Classification: Electric tow tractor (692.40)
8-27-79	062367	Classification: Silk bags (389.30)
8-31-79	062398	Classification: Plastic pencil case (706.60, 772.20)
8-31-79	062400	Classification: Forged steel valve flanges (680.22, 680.27)
9- 5-79	062439	Classification: Ski gloves (734.99)
8-31-79	062446	Classification: Lipstick case (706.60)
8-31-79	062465	Classification: Semimanufactured metal powders (605.08, 605.28, 605.48)
8-29-79	062472	Classification: Cassette head cleaner (772.15)
8-31-79	062477	Classification: Drill anchors (646.42, 646.54)
8-20-79	062492	Classification: Metal balance figurines (737.95)
8-28-79	062497	Classification: Scaffold (657.25)
9- 5-79	062521	Classification: Joists (652.94)
8-31-79	062527	Classification: Stator and rotor laminations (682.60)
9- 4-79	062575	Classification: Cartoon figure (737.22)
9- 7-79	062673	Classification Baseball caps (703.05)
8-11-79	062115	Classification: Tool holders; sockets; tool bits (649.43, 674.50)
9-13-79	062136	Classification: Electronic typewriters (676.05, 676.07)
9-13-79	062269	Classification: Bean bags in the form of animals (737.40)
8-13-79	062274	Classification: American-made aircraft component parts system returned to United States after being disassembled abroad (800.00)
9-13-79	062330	Classification: Snowblowers (661.10)
9-13-79	062339	Classification: Computer translator (676.15)
9-17-79	062419	Classification: Toothbrush and oral spray set (750.40, 772.15, 772.65)
9-17-79	062460	Classification: Ceramic casserole table oven (684.20)
9-13-79	062484	Classification: High-precision grids on polyester sheets (771.42)
9-17-79	062571	Classification: Stickers (790.55)
9-14-79	062675	Classification: All-terrain motor vehicle (692.03, 692.10, 692.11)
9-17-79	062196	Classification: Plastic sheeting laminated to backing of nonwoven polyester fabric (359.50)
9-21-79	062239	Classification: Clown figure (737.95)
9-21-79	062301	Classification: Fishing rod and reel set; carrying case (706.60, 731.15, 731.20)
9-20-79	062361	Classification: Coppery insoles (774.60)
9-21-79	062365	Classification: Sunlamp bed; overhead sunlamp panels (668.40)
9-21-79	062397	Classification: Roller skate bearing hub (734.90)
9-26-79	062401	Classification: Microfiche handviewer (708.85, 722.55)
9-25-79	062459	Classification: Control unit for electroplating machines (688.40)
9-20-79	062493	Classification: Artificial flower wreath (772.97)
9-26-79	062535	Classification: Riding horse hardware bits (646.98)
9-21-79	062539	Classification: Bicycle tire; wall tubing (771.55, 772.54, 774.60)

Date of decision	File No.	Issue
9-26-79	062544	Classification: Plastic baby feeding bottle (772.15)
9-26-79	062549	Classification: Plastic laundry bags (774.60)
9-25-79	062552	Classification: Fiber glass poles (770.10)
9-25-79	062556	Classification: Fibrous connector for roller ball pen (760.05, 760.40, 760.42)
9-27-79	062578	Classification: Miniature animal figures (737.40)
9-25-79	062603	Classification: Bolt tensioner (678.50)
9-26-79	062605	Classification: Plastic air diffuser (774.60)
9-25-79	062718	Classification: Textile winding machine (670.12)
10- 2-79	062117	Classification: Clip-on figure of furry monkey (737.35)
10-17-79	062200	Classification: Electronic novelty (737.95)
10-19-79	062222	Classification: Footwear with uppers of imitation suede (700.58, 700.60)
10-17-79	062225	Classification: Microprocessor (676.15)
10-17-79	062264	American selling price: Date on which American selling price of domestic prototype becomes effective
10- 5-79	062329	Classification: Christmas decorations consisting of animated figures (737.22)
10-19-79	062338	Classification: Tote bags (389.62, 706.24)
10-11-79	062353	Classification: Bamboo container (222.40)
9-18-79	062376	Classification: Fiber glass reinforced rods (770.10)
9-25-79	062489	Classification: Woman's shoe (700.53, 700.60)
10- 1-79	062553	Classification: Christmas tree ornaments of straw (222.64, 737.22, 748.34, 748.36)
10-19-79	062582	Classification: Beef rodder; seal expander (651.47, 674.70)
9-27-79	062599	Classification: Melting base iron (657.25)
10-10-79	062609	Classification: Self-defense protective device (730.88)
9-27-79	062634	Classification: Motorized bicycle (692.50)
10- 2-79	062644	Classification: Religious medal (656.35, 740.30, 740.38, 740.50)
10-5-79	062739	Classification: Rayon tote bag (389.62, 706.24)
10-22-79	062320	Classification: Gloves with plastic clasps (734.99)
11- 7-79	062082	Classification: Roofing materials (494.60, 771.42, 774.60)
11- 5-79	062267	Classification: Soft toy sculptures (737.25, 737.30)
11- 9-79	062372	Classification: Footwear used with roller skates (700.35, 700.45, 734.90)
11- 5-79	062635	Classification: Marking unit (668.15)
10-22-79	062638	Classification: Sleeve nuts (646.56, 666.00, 923.52)
11- 9-79	062642	Classification: Sandal (700.60)
11- 9-79	062648	Classification: Sandal (700.60)
11- 1-79	062663	Classification: Molded plastic footwear bottom for woman's shoe (770.30, 774.60)
11- 1-79	062681	Classification: Sandal (700.60)
11- 7-79	062687	Classification: Placemats and coasters (220.50, 256.90, 772.35)
11- 7-79	062692	Classification: Timber loaders (664.10, 692.40)
11- 7-79	062693	Classification: Water ski pylon (657.25, 696.15)
11- 5-79	062697	Classification: Golf caps (703.05)

Date of decision	File No.	Issue
11- 1-79	062701	Classification: Smoke grenades (755.15)
11- 9-79	062706	Classification: Sterling silver miniatures (656.15)
11- 9-79	062733	Classification: Footwear with polypropylene uppers (700.58)
11- 2-79	062789	Classification: Concrete panel-making machine (678.20)
10-22-79	062461	Classification: Brazing alloy powders (423.96, 618.42)
11- 2-79	062534	Classification: Tote bag (389.62, 706.24)
11- 5-79	062555	Classification: Bicycle headlight (683.80)
11- 5-79	062585	Classification: Ratchet pullers and chain hoists (664.10)
11- 5-79	062606	Classification: Man's casual slip-on shoe (700.60)
11- 5-79	062617	Classification: Nickel-chromium foil (644.22)
10-22-79	062624	Classification: Percussion musical instruments (725.40)
10- 5-79	062629	Classification: Air preheaters (660.15)

MISCELLANEOUS AND SPECIAL PROVISIONS CLASSIFICATION BRANCH

10-23-78	058518	Classification: Acrylic optical fiber
10-25-78	058536	Classification: Criteria used to determine whether a product is "stoneware"
10-16-78	058585	Duty assessment: Merchandise of U.S. origin exported for packaging and subsequently returned to the United States
10-16-78	058609	Classification: Basis for excluding photographs from classification under the provisions for works of art
10-16-78	058625	Classification: Devices which regulate the fill level and activity of certain liquids
10-20-78	058627	Duty assessment: Bare root rose bushes exported from United States for waxing and then returned
10-23-78	058640	Duty assessment: Eligibility of electric motors labeled as samples for duty-free importation under item 860.30, TSUS
10-19-78	058864	Classification: Soap dishes decorated in a strawberry pattern
11- 7-78	058436	Classification: Switchgear cubicle (661.95, 685.90)
11- 9-78	058542	Classification: Quartz time clock parts; quartz crystals; integrated circuits, printed circuit board (687.60, 720.02, 720.34, 720.82, 720.86)
11- 8-78	058619	Classification: Gear testers (710.80, 712.49)
11-14-78	058632	Classification: Anesthesia breathing circuits (800.00, 807.00)
11-13-78	058644	Classification: Aircraft (807.00)
12-14-78	058652	Classification: Spectrometer (709.63)
11-17-78	058660	Classification: Asbestos underslating (518.51)
11- 7-78	058664	Classification: Statuettes (534.11)
11-15-78	058669	Classification: Ceramic articles (206.98, 533.33, 533.35, 533.36, 534.81-534.87, 923.07)
12-18-78	058680	Classification: Polyurethane resin (800.00)
12-22-78	058634	Classification: Faceted glass (546.52-546.59)

Date of decision	File No.	Issue
1- 5-79	058639	Classification: Electronic modules (807.00)
11- 6-78	058661	Classification: Watch cases and bands gold plated in United States (800.00, 807.00, 864.05)
12-20-78	058666	Classification: Carbon monoxide detection unit (685.70, 712.49)
1-12-79	058720	Classification: Optoacoustic spectrometer (712.49)
1-18-79	058777	Classification: Watch movements
1-12-79	058779	Classification: Foreign-made molds; lease (801.00)
12-19-78	058635	Classification: Television and lens test system (712.05, 712.49)
1-24-79	058645	Classification: Engine instrumentation system (685.70, 685.90, 688.40, 711.98, 712.49)
12-20-78	058689	Classification: Polypropylene slit yarn (806.20)
12-19-78	058635	Classification: Lens test system (712.05, 712.49)
2-22-79	058656	Classification: Measuring machines (676.15, 676.30, 684.64, 712.49)
2-15-79	058686	Classification: Measuring and checking devices (712.49)
2-15-79	058790	Classification: Woven pile fabrics (806.20)
2- 2-79	058804	Classification: Bell-shaped glass globes (546.52 through 546.59)
2-22-79	058808	Classification: Flower pots assembled in Canada with materials of U.S. origin (807.00)
2- 2-79	058822	Classification: Automobile exported to Mexico for the installation of a replacement body and returned to the United States (806.20)
3-23-79	058503	Classification: Antibiotic test kit; baby bottle warmer (684.50, 711.88)
3-20-79	058617	Classification: Opacity and color requirements for stonewear, subporcelain, and porcelain
3-14-79	058623	Classification: Ceramic substrates; integrated circuit packages (535.14, 685.90)
3- 1-79	058700	Classification: Ceramic plaque (534.87, 534.94)
3-12-79	058744	Classification: Parts of time switches (657.40, 680.45, 682.20, 685.90, 715.60 through 715.68, 720.02, 720.36, 774.60)
3- 6-79	058803	Classification: Automobile cylinder plug with keys (646.92, 685.90)
3- 1-79	058832	Classification: Tube hollows (806.30)
3- 9-79	058837	Classification: Ceramic board (522.81)
3-30-79	058849	Classification: Pencil holder; mirror frame; clock case; glass mirror (544.51, 544.54, 720.34, 774.60)
3- 2-79	058863	Classification: Watch cases (807.00)
3- 7-79	058865	Classification: Freight car components assembled abroad (807.00)
3-16-79	058868	Classification: Steel wire rods (806.30)
3- 8-79	058876	Classification: Gas-insulated substations (685.90)
2-27-79	058882	Classification: Sweaters (801.10)
3- 7-79	058913	Classification: Samples (860.30)
3-23-79	058955	Classification: Automobile stereos

Date of decision	File No.	Issue
4- 5-79	058895	Classification: Building blocks (523.91, 523.94)
5-23-79	058746	Classification: Construction sealants; adhesives; caulkings (405.25, 409.00, 474.60, 474.62, 494.60, 521.11, 523.91)
4-23-79	058921	Classification: Petrified wood (520.11, 520.61)
3-21-79	058880	Generalized system of preferences: Rum made from molasses from insular possession
4-17-79	058881	Classification: Door guard (685.70, 688.40)
4-17-79	058885	Classification: Tying pliers (709.25, 709.27)
4-19-79	058890	Classification: Telephone apparatus assembled abroad from U.S. components (807.00)
4-24-79	058930	Classification: Pieces of fabric assembled abroad (807.00)
4-17-79	058958	Classification: Sapphire substrate wafers (520.75)
4-25-79	058960	Classification: Rolls of paper exported for cutting and rewinding (800.00, 806.20)
4- 9-79	058984	Classification: Mushrooms exported to Canada for freeze drying and returned (806.20)
4-27-79	058670	Classification: Intercoms (684.62, 684.70, 685.24, 685.29)
3- 7-79	058799	Classification: Flash tube (712.49)
5-23-79	058845	Classification: Watch movements assembled abroad in part from U.S. components (807.00)
4-20-79	058953	Classification: Fat depth indicator (710.80, 712.49)
5-15-79	058975	Classification: Surgical laser (709.15)
6-22-79	058847	Classification: Cementitious hydraulic slag cement (511.14, 523.91)
6-19-79	058914	Classification: American-made loudspeakers exported to Mexico for disassembly and returned for subsequent manufacturing processes (800.00, 806.20, 806.30)
6-19-79	058922	Classification: Vinyl cover used on a vibrating massage pillow (709.40, 772.35)
6-18-79	058962	Classification: Electrical strings of party or christmas lights assembled abroad from component wires and brass terminals of U.S. origin (800.00, 807.00)
6-15-79	058965	Classification: Abrasive disc (519.51, 519.84, 774.60)
6-25-79	058520	Classification: Ornaments and appliques assembled abroad from ribbons from United States (807.00)
6-18-79	058794	Classification: Burglar alarm/flashlight (683.70, 688.40)
6-15-79	058570	Classification: Silicon slices (633.00, 658.00)
6-18-79	058848	Classification: Whether foreign cutting of surgical packs along stencilled lines is an alteration (806.20)
9-11-79	058840	Classification: Laminated glass fabrics (355.82, 523.91, 531.39, 790.55)
4-23-79	063005	Classification: Microwave browning grill (533.77)
5-10-79	063015	Classification: Asphalt shingles produced abroad from U.S. materials (807.00)
5-21-79	063024	Classification: Metal scrap (806.30)
5-31-79	063079	Classification: Microcalorimeter (712.49)
6- 1-79	063085	Classification: Articles assembled abroad (807.00)

Date of decision	File No.	Issue
5-24-79	063070	Classification: Projection system to be placed in planetarium (862.10)
6- 5-79	063069	Classification: Diced fresh celery exported for freeze drying, sold while abroad, and returned to United States (806.20)
6-19-79	063083	Classification: Digital display for coordinatograph (710.80, 712.49)
6-12-79	063088	Classification: Electrosurgical dispersive electrode (685.90)
7- 6-79	063142	Classification: Wire exported for processing abroad into coils (682.60, 806.30)
7-31-79	063112	Classification: Defective electrical wiring harness units exported for repairs and returned (806.20)
8- 2-79	063034	Classification: Fibrous alumina radiants (523.91, 531.39)
8-10-79	063150	Classification: Self-lubricated platform escapement for clock (720.86)
8- 8-79	063153	Classification: Bricks (511.61)
8-24-79	063169	Classification: Plastic boards exported for assembly into terminal boards and returned (807.00)
8- 1-79	063209	Classification: Aluminum knobs (647.03)
8-30-79	063212	Classification: Sludge level detector (710.80)
8- 3-79	063711	Classification: Applicability of general headnote 3(a), TSUS, to watch cases and cased watches assembled in Virgin Islands
9-21-79	063081	Classification: Computer controller (676.15)

MATERIALS CLASSIFICATION BRANCH

11- 1-78	059002	Classification: Women's blouses with drawstrings on shoulders and waist
11- 2-78	059199	Classification: Synthetic monofilament cloth used as Fourdrinier wire
9-29-78	059244	Classification: Tariff status of certain fabrics when imported in material lengths, when imported as bedspreads, and when imported as drapes
6-15-78	059370	Classification: Jeans to which a metal label with stylized lettering is attached
10-27-78	059414	Classification: Embroidered pajamas; jackets trimmed with capping and stitching
10- 4-78	059425	Classification: Manmade fiber fabric laminated with plastics; flexible sheet plastics
10- 2-78	059482	Classification: Knit shift with capping on V-neck opening, tie closures, and ruffles
10-26-78	059491	Classification: Woman's blouse containing drawstrings on shoulders
11-29-78	059590	Classification: Sleeveless colored undershirt (tank-top type), labeled to be an athletic shirt

Date of decision	File No.	Issue
11- 1-78	059601	Classification: Cotton comber noils, a cotton waste resulting from a cotton combing operation
11- 3-78	059680	Classification: Encapress System, a sealant for bell joints in cast iron pipes
11- 1-78	059744	Classification: Polyethyleneimine
10-27-78	059763	Classification: Woman's blouse with loop at the back of the collar
11- 2-78	059780	Classification: Knit rayon scarf
11- 3-78	059801	Classification: Metal inserts in ends of paper core used in rolls of standard newsprint paper
11- 1-78	059803	Classification: Sodium 5-(4-chlorobenzoyl)-1, 4-dimethyl-1H-pyrrole-2-acetate dihydrate, an antiinflammation drug of benzenoid origin
11- 2-78	059853	Classification: Cotton shopping bags
11- 2-78	059873	Classification: Asphalt saturated chipboard roofing shingles
10-25-78	059739	Classification: Ibuprofen drug; ASP
11-14-78	059016/ 059495	Classification: Boron-10 isotope (494.52)
10- 4-78	059221	Classification: Scarves (372.30, 372.35, 372.70)
11-15-78	059353	Classification: Scarves, shawls, mufflers (365.78, 372.10, 372.70, 382.02, 702.54, 702.56, 702.90, 703.10)
11-15-78	059371	Classification: Synthetic chamois cleaning cloth (774.60)
10-27-78	059475	Classification: Wooden, woven salad bowl (206.95, 206.98)
12-20-78	059517	Classification: Post-mastectomy brassiere (376.24, 376.28)
12-19-78	059525	Classification: Hand-warmer muff (382.33, 382.81, 748.40)
11-14-78	059534	Classification: Support stockings (374.60, 709.57)
11-15-78	059577	Classification: Fabric coated or filled with plastic (346.60, 355.82, 359.50)
11-17-78	059752	Classification: Steroid drug precursors (425.52, 425.99, 427.64, 428.12, 437.60, 439.30)
10- 4-78	059772	Classification: Jeans with labels plain or stylized
11- 3-78	059781	Classification: Maxarome paste, an autolyzed yeast extract (437.49)
11-17-78	059826	Classification: Toasted onion product (141.50)
11-17-78	059864	Classification: Pocket-sized address book (256.56)
11-14-78	059898	Classification: Instant wool; greasy wool (306.22, 306.32, 307.40)
11-29-78	059922	Classification: Rubber processing chemicals (403.60, 403.90, 425.36)
11-30-78	059947	Classification: Cooking wine or sauce (182.46)
11-17-78	059948	Classification: Ethyl silicate (428.72)
11-29-78	059972	Classification: Heat transfer printing paper (252.67)
11-17-78	059993	Classification: Handcrafted wooden screen (206.67)
11- 1-78	059883	Classification: Lace curtains of manmade fibers
10-27-78	059887	Classification: Cotton canvas horse cover

Date of decision	File No.	Issue
11- 2-78	059907	Classification: Canned pears
11- 2-78	059926	Classification: Form bond paper
11- 3-78	059929	Classification: Greeting card
11- 3-78	059951	Classification: Women's dress patterns
1-25-79	059260	Classification: Blood banking reagents; antisera; immunoadsorbent (437.76, 799.00)
1-24-79	059331	Classification: Antibodies; antiserum (799.00)
1-25-79	059456	Classification: Pillow cushion covers (365.91)
1-26-79	059669	Classification: Men's zippered jackets (380.00, 380.04, 380.09, 380.12, 380.84)
1-11-79	059668	Classification: Signs (274.70, 274.90, 652.75)
2- 1-79	059681	Classification: Net underwear (378.05, 380.00)
1-26-79	059761	Classification: Zircon sand (473.88, 523.91)
1-25-79	059794	Classification: Ion exchange resin (405.25, 661.95)
1-11-79	059715	Classification: Artificial flower (389.61, 748.21)
2- 1-79	059724	Classification: Braided packing material (348.00, 385.10)
1-26-79	059823	Classification: Shirt with stitched-down box pleat; tucking (382.00)
1-24-79	059857	Classification: Banana and yucca chips (141.81, 146.44)
1-24-79	059895	Classification: Cellulose wallpaper paste (455.44, 455.46)
1-11-79	059822	Classification: Nail polish remover (461.40)
12-18-78	059871	Classification: Raw petroleum coke (475.70, 523.91)
1-11-79	059889	Classification: Lid handles (206.98)
1-11-79	059965	Classification: Fishing garment (380.09, 380.12, 380.39)
2- 1-79	059984	Classification: Cheese (117.85)
2- 1-79	059909	Classification: Lithium chloride solution (793.00)
2-15-79	059756	Classification: Packing material (348.05, 387.30, 385.10)
1- 9-79	059775	Classification: Fibrous flame suppressors (355.25, 832.00)
2- 2-79	059858	Classification: Ski jacket (380.84)
2- 8-79	059888	Classification: Knit shirt (380.81)
3- 8-79	059820	Classification: Beverage tea product (182.98)
2-14-79	059964	Classification: Pajamas (380.21, 380.24, 380.84)
3- 7-79	059919	Classification: Denim jacket; denim jumpsuit (380.09, 380.12, 380.39, 380.84)
1-25-79	059591	Classification: Wound dressing made from porcine skin (120.20, 799.00)
3-15-79	059894	Classification: Xerographic toner (405.25, 406.50, 409.00)
2-13-79	059992	Classification: Siam jacket (380.00, 380.04)
3- 6-79	059137	Classification: Wall covering material (256.05, 335.75, 222.64, 335.95, 386.50, 387.30, 389.60)
3- 6-79	059241	Classification: Wall coverings (256.05, 357.80)
2-26-79	059698	Classification: Roof coating product of asphalt and fiberglass (799.00)
3-15-79	059746	Classification: Bound printed matter (274.75, 274.85, 668.38)
3-13-79	059767	Classification: Polypeptides (403.90, 425.52, 432.00)
2-13-79	059796	Classification: Eyelet embroidery

Date of decision	File No.	Issue
3- 3-79	059815	Classification: Crabmeat (114.15, 114.20)
3-15-79	059901	Classification: Jackets (380.02, 380.63, 380.66)
2-14-79	059906	Classification: Fabric-backed vinyl material (355.65)
3- 1-79	059562	Classification: Sweaters (382.02, 382.04, 382.06, 382.58, 382.78)
3- 3-79	059908	Classification: Wall coverings (256.05, 359.20, 387.30)
4-10-79	059939	Classification: Wall coverings (338.10, 338.30, 355.65, 338.15, 356.25, 356.45, 357.10, 357.15, 359.50)
4- 2-79	059955	Classification: Knit women's garments (382.02, 382.54, 382.58)
3- 1-79	059981	Classification: Acoustical material (245.90, 355.25, 389.62)
4-13-79	059457	Classification: Fiber board (355.25)
4-13-79	059567	Classification: Men's trousers with nonornamental stitching (380.39, 380.84)
4-13-79	059608	Classification: Quilted nylon suit bag (706.24)
4-10-79	059764	Classification: Unfilled novelty pillow slip (367.60)
4-13-79	059824	Classification: Man's hip length jacket with ornamental overlays around garment pockets (380.00, 380.04)
4-13-79	059870	Classification: Toy storage bag of woven cotton fabric (386.50)
4-13-79	059957	Classification: Benzenoid dye (406.10)
4-17-79	059973	Classification: Musk-ox wool (186.55)
4-13-79	059990	Classification: Deodorizer products (432.00)
4-13-79	059802	Classification: Woven billiard cloths (336.50, 336.55, 336.60, 357.10, 357.15, 357.20, 359.30)
5- 3-79	059958	Classification: Knit sweaters (382.05, 382.39)
6-27-79	059144	Classification: Woman's blouse (382.00)
6-19-79	059454	Classification: Women's sweaters of lace construction (382.04)
5-17-79	059518	Classification: Military chinstrap (382.33, 382.81)
6-19-79	059603	Classification: Fencing suit material containing metalized yarns (339.10)
6-27-79	059731	Classification: Quilted corduroy jacket (380.00)
6-19-79	059736	Classification: Imitation grass (355.81, 774.60)
6-19-79	059748	Classification: Moulded egg carton (256.70, 256.75)
5-17-79	059896	Classification: Dress shirt (380.27, 280.84)
6-13-79	059953	Classification: Ski pants (380.63, 380.66, 380.84)
6- 1-79	059996	Classification: Jacket; windbreaker; ski pants (376.56)
8-22-79	059184	Classification: Woven cotton fabric dotted with resinous plastic (355.65)
8-16-79	059558	Classification: First day covers (274.70)
8-22-79	059695	Classification: Jeans (380.39)
9- 7-79	059693	Classification: Ready-mixed cement (511.25)
9- 7-79	059924	Classification: Women's underwear bearing the word "love" (382.00)
12-20-78	060040	Classification: Waterproof ski jackets (376.56)
1-25-79	060122	Classification: Mixture-mineral premix for horses (184.75)

Date of decision	File No.	Issue
2- 1-79	060038	Classification: Rugs; wall hangings ponchoes; bamboo (222.05, 360.05, 360.48, 360.70, 367.05-367.15, 380.02)
2- 2-79	060132	Classification: Septic tank solid reducer (799.00)
3-13-79	060271	Classification: Benzenoid pesticide (405.15)
2-28-79	060005	Classification: Flexible polyester resin (405.25)
3-13-79	060007	Classification: Benzenoid chemical used as a photographic developer (405.20)
4-10-79	060039	Classification: Printing ink compound (176.26, 430.00, 432.00, 799.00)
1-25-79	060044	Classification: Polyvinyl chloride resin (445.45)
2-26-79	060054	Classification: Sweater with ornamental label (380.02)
3-15-79	060223	Classification: Lithographical, printed pictorial matter (274.60)
3- 1-79	060252	Classification: Cold pack (774.60, 799.00)
3-15-79	060267	Classification: Alachlor (405.15)
4- 2-79	060328	Classification: Elastic package ties (349.10, 389.62)
4- 5-79	060001	Classification: Hand loom wall hanging (366.79, 670.14)
4-10-79	060102	Classification: Water-based resin (493.30, 945.49)
4-13 79	060233	Classification: Cheese (117.85)
4-17-79	060261	Classification: Men's work pants (380.04)
4-17-79	060265	Classification: Nonwoven, stitch-bonded fabric (359.50)
4-17-79	060460	Classification: Men's overalls (380.39)
4-12-79	060242	Duty assessment: Domestic crude oil pumped via Canadian pipelines from Montana to Minnesota
3- 9-79	060294	Classification: Meats (106.10, 107.60)
4- 2-79	060328	Classification: Elastic package ties (349.10, 389.62)
4-25-79	060349	Classification: Western-style shirts (380.21).
6-22-79	060008	Classification: Lace underwear (378.05)
3-17-79	060063	Classification: Foaming agent (465.95)
6-27-79	060068	Classification: Air freshener (389.62)
5-25-79	060232	Classification: Sponge cloth (355.65)
5-17-79	060251	Classification: Wooled sheepskins (124.40)
5- 3-79	060263	Classification: Oriental rugs (360.36)
6- 1-79	060269	Classification: Polysaccharide gum (188.38, 493.68)
6- 1-79	060298	Classification: Wood moldings (245.80)
6- 1-79	060303	Classification: Cotton denim jeans (380.39, 282.33)
6-19-79	060339	Classification: Fiber glass yarn (338.27, 356.45)
6-19-79	060342	Classification: Sheets and pillowcases (363.30, 363.85)
5-25-79	060359	Classification: Towel and apron (382.81, 382.33)
6-27-79	060384	Classification: Bacteriological agents for use in cleaning cesspools and septic tanks (437.49)
5-17-79	060418	Classification: T-shirt (382.06)
6-19-79	060448	Classification: Boy's knit shirt (380.04)
6-27-79	060472	Classification: Printed paper books (270.25)
6-19-79	060473	Classification: Stone and brick mortar (494.60)
6- 7-79	060502	Classification: Animal feed (184.75)
5-17-79	060517	Classification: Wooden log home shell (207.00)
6-22-79	060530	Classification: Label for wearing apparel; ornamentation

Date of decision	File No.	Issue
6-27-79	060015	Classification: Hair preparations (425.52, 428.46, 432.00, 437.49, 437.82. 460.85, 461.40, 465.15, 465.20)
6-19-79	060437	Classification: Fruit powder (152.05)
6-25-79	060489	Classification: Tacboard (540.71)
6-19-79	060501	Classification: Fish roe (113.35, 113.40)
6-22-79	060593	Classification: Catalysts (417.12, 418.60, 419.60, 419.72, 423.88, 423.90, 423.96)
6-19-79	060283	Classification: Ceramic yarn (312.50, 523.91)
7-17-79	060587	Classification: Ceramic fiber blocks and blankets (522.81, 523.91, 661.30, 683.95)
8-10-79	060029	Classification: Canned sardines in tomato sauce (112.22)
8-10-79	060390	Classification: Towels (366.84)
8- 1-79	060465	Classification: Sodium azide based gas generant (485.50)
8-10-79	060486	Classification: Whether patch pocket on denim jeans is ornamental
8-10-79	060664	Classification: Elastic knitted fabric (349.15, 349.25)
8-22-79	060016	Classification: Benzenoid toner (406.70)
8-22-79	060017	Classification: Benzenoid toner (406.70)
8-22-79	060018	Classification: Benzenoid toner (406.70)
8-22-79	060019	Classification: Benzenoid toner (406.70)
8-22-79	060020	Classification: Benzenoid toner (406.70)
8-22-79	060021	Classification: Benzenoid toner (406.70)
8-22-79	060022	Classification: Benzenoid toner (406.70)
8-22-79	060023	Classification: Benzenoid toner (406.70)
8-22-79	060024	Classification: Benzenoid toner (406.70)
8-22-79	060025	Classification: Benzenoid toner (406.70)
8-22-79	060026	Classification: Benzenoid toner (406.70)
8-22-79	060027	Classification: Benzenoid toner (406.70)
8-16-79	060410	Classification: Camisole top (382.33)
8-16-79	060436	Classification: Calico jeans (382.00)
8-22-79	060623	Classification: Mixture of ground aluminatrihydrate and limestone (417.12, 432.00, 514.11, 514.41)
8-30-79	060334	Classification: Blanket wrap (386.09, 389.50)
8-22-79	060442	Classification: Insecticide (425.22, 430.00)
8-30-79	060583	Classification: Polyethylene jacket (382.81)
8-30-79	060643	Classification: Growing peat supplement (192.50, 480.80)
8-22-79	060651	Classification: Greeting card; paper-covered book; calendar (256.35, 256.36. 270.25, 274.05, 274.10, 274.60)
8-30-79	060738	Classification: Zinc oxide adhesive plaster (495.05)
9-11-79	060338	Classification: Acrylic liquid additive (445.05)
9-12-79	060381	Classification: Pocket warmer (799.00)
9-11-79	060818	Classification: Color wheel (273.35)
9- 7-79	060680	Country of origin: Silk fabric from Mainland China, washed in Hong Kong to remove gum and prepare for dyeing
9-17-79	060690	Classification: Blends of citric acid and sugar (155.75, 182.98)
9-21-79	060702	Classification: Mechanic's creeper (692.60)
10- 2-79	060752	Classification: Woven cotton fabric (321.40)

Date of decision	File No.	Issue
9-17-79	060761	Classification: Training manual (270.25, 870.30)
10-11-79	060781	Classification: Man's jacket with epaulets (380.84)
10-11-79	060816	Classification: Articles printed on plastic (274.90, 790.55)
10-11-79	060879	Classification: Nonwoven bonded fabric of nylon and polyester fibers (355.25)
10-11-79	060762	Classification: Whether a fabric is "coated or filled" for tariff purposes (338.30)
10-22-79	060771	Classification: High fructose corn syrup (155.75)
9-17-79	060065	Classification: Whether double needle stitching on blue jeans constitutes ornamentation
9-24-79	060120	Classification: Wall hangings (365.78, 366.79)
9-17-79	060214	Classification: Hospital drapes (355.25, 389.62, 709.27)
9-24-79	060327	Classification: Pollution control device of textile fabric (355.82)
9- 7-79	060413	Classification: Woven cotton bag for shipping (385.55)
9-17-79	060428	Classification: Latch hook kits containing yarn, needle, and latch hook; canvas rolls (310.91, 338.30, 386.50, 389.62, 536.15, 651.05, 651.47, 651.75, 774.60)
9-12-79	060452	Classification: Wood preservative cartridges (405.15)
9-24-79	060620	Classification: Woman's pleated shirt (382.04)
9-24-79	060644	Classification: Synthetic menthol product (437.64)
9-24-79	060647	Classification: Herbal mix; herbal laxative (439.30, 440.00)
9- 4-79	060649	Classification: Whether textile tabs on sleeves of woman's pantsuit constitute ornamentation (382.78)
8- 1-79	060676	Classification: Cotton (300.10, 955.01, 955.05)
10-26-79	060773	Classification: Tri-n-octyl phosphine oxide (429.95)

Decisions of the United States Customs Court

United States Customs Court

One Federal Plaza
New York, N.Y. 10007

Chief Judge

Paul P. Rao
Morgan Ford
James L. Watson
Herbert N. Maletz

Judges

Edward D. Re
Paul P. Rao
Morgan Ford
Scovel Richardson
Frederick Landis
James L. Watson
Herbert N. Maletz
Bernard Newman
Nils A. Boe

Senior Judge

Samuel M. Rosenstein

Clerk

Joseph E. Lombardi

Customs Decision

(C.R.D. 79-16)

DAVID E. PORTER, PLAINTIFF, *v.* UNITED STATES, DEFENDANT.

Memorandum Opinion and Order Granting Plaintiff's Motion To Settle Record

Court No. 76-6-01448
[C.D. 4808 decided June 22, 1979; Cross-Appeals 79-30 and 80-1.]

(Dated December 7, 1979)

Arter Hadden & Hemmendinger (*Noel Hemmendinger* and *Barry E. Cohen* of counsel) for the plaintiff.

Alice Daniel, Acting Assistant Attorney General (*Joseph I. Liebman*, Attorney in Charge, Field Office for Customs Litigation; *Madeline B. Kuflik*, trial attorney), for the defendant.

LANDIS, Judge: For the fourth time in less than six months, the Court is faced with a motion by plaintiff in *David E. Porter* v. *United States*, Court No. 76–6–01448, Cross-Appeals 79–30 and 80–1. On this occasion, plaintiff has moved for an order, pursuant to Customs Court Rule 13.1, to settle the record on appeal in this case. The defendant has deferred to the court's discretion.

As frequently happens, the question is essentially a simple one, but the parties, by their various pleadings, have complicated the issue.

A history of this case will be helpful.

In *David E. Porter* v. *United States*, 82 Cust. Ct. —, C.D. 4808, 475 F. Supp. 688 (1979), in a decision dated June 22, 1979, on cross-motions for summary judgment, plaintiff's motion for summary judgment was granted and defendant's motion for summary judgment was denied.

The specific issue then was the classification of transverse rapid transit seats used exclusively in San Francisco Bay Area Rapid Transit (BART) rail vehicles. A full discussion of the competing tariff schedule item numbers involved and all the legal arguments appears in the decision in C.D. 4808. (It is noted, in view of plaintiff's argument given verbatim in the following paragraph here, that it is specifically stated in C.D. 4808 that "transverse seats are mounted at right angles to the direction of the vehicle's travel.") On August 15, 1979, the defendant filed an appeal of the decision to the U.S. Court of Customs and Patent Appeals, Appeal 79–30.

On August 7, 1979, plaintiff moved, pursuant to Customs Court Rule 12.2, for an order amending the June 22, 1979 judgment entered in plaintiff's favor. The crux of plaintiff's argument appeared in one paragraph [Plaintiff's Motion To Amend Judgment, pp. 2, 3]:

> Upon review of the court's decision and the entry papers in this case, *counsel belatedly recognizes an oversight* in the merchandise described *in its summary judgment motion*. Although the merchandise embraced by the entries in litigation include transverse seats, window seats (both of which are mounted at a right angle to the direction of travel), and longitudinal seats (mounted in the direction of travel), *plaintiff's motion inadvertently addressed only the transverse seats. It should have included the window and longitudinal seats*, as these are similar in design to the transverse seats and are exclusively dedicated as parts of the BART rail vehicle. An affidavit of an official of Rohr Industries, the prime contractor for BART, attesting to these facts is attached. [Italic supplied.]

The defendant responded pursuant to rule 12.1(c), the court rule

dealing with responses to a motion for rehearing. However, the order of the court was simply to dismiss the motion to modify, which was plainly improper for many reasons. Had the court specifically sustained defendant's opposition instead of just dismissing plaintiff's motion to amend, the court could have been faced with what might be described as a labelling problem. Plaintiff had moved pursuant to rule 12.2(a) which concerns amendment of judgment due to "oversight". The defendant, as noted, answered under rule 12.1(c) dealing with responses to rehearing requests.

Of course, the "labelling" disagreement camouflaged a significant debate. If plaintiff's "oversight" label was correct, plaintiff's motion might have been timely because such "errors * * * arising from oversight * * * may be corrected by the court *at any time* * * * ." Rule 12.2(a), italic supplied. If the defendant's "rehearing" label was correct, plaintiff's motion was untimely, under both the following relevant statute and court rule.

The Statute (28 U.S.C. § 2639) provides:

> The judge who has rendered a judgment or order may, upon motion of a party or upon his own motion grant a retrial or a rehearing, as the case may be. A party's motion must be made or the judge's action on his own motion must be taken, not later than thirty days after entry of the judgment or order.

The rule, Customs Court Rule 12.1(a), provides:

> Form and Filing of Motions: All motions for rehearings or retrials must be in writing and filed with the clerk of the court at New York within 30 days from the entry of the judgment or order in the action in which rehearing or retrial is requested.

Thus, both the rule and statute require that a rehearing motion be filed not later than 30 days from the entry of judgment. Here judgment was entered on June 22, 1979. The plaintiff's motion was filed August 7, 1979, clearly not within the 30-day requirement.

According to the defendant, plaintiff's alleged "oversight" constituted false labeling. In its Opposition, the defendant argued:

> * * * The relief sought by plaintiff is for the court to broaden its decision in C.D. 4808 to include merchandise which was not included or considered in the original motion, even though plaintiff had the opportunity to seek adjudication of the classification of the other seats in the original motion. * * * The relief sought is more than the mere correction of a clerical error. It is a matter of substance affecting the substantial rights of the parties. * * * [Defendant's Opposition to Plaintiff's Motion to Amend Judgment, p. 2.]

The defendant relied heavily on *United States* v. *Torch Manufacturing Co., Inc.*, 62 CCPA 41, C.A.D. 1143, 509 F.2d 1187 (1975) and concluded that "this court lacks jurisdiction to reopen the judgment."

As above indicated, on September 13, 1979, the court issued the following order:

> Upon reading and filing plaintiff's motion to amend judgment, defendant's opposition thereto, and upon all other papers and proceedings had herein, it is hereby
>
> ORDERED that plaintiff's motion is DISMISSED.

Undaunted, the next day, September 14, 1979, plaintiff attempted to serve a "Motion for Partial, and Final, Summary Judgment." Plaintiff's papers were received by the clerk of the court on September 19, 1979, and the following day, they reached my chambers.

On September 25, I instructed the clerk to return these last papers as not within the contemplation of the court rules. The following day, September 26, 1979, the clerk mailed a "Notice of Rejection" stating the motion was "moot", and returned plaintiff's papers.

On October 4, 1979, plaintiff filed a cross-appeal with the Court of Customs and Patent Appeals, Appeal 80–1.

The aforementioned history forms the basis of plaintiff's present motion filed on November 1, 1979. The plaintiff has moved to settle the record, by incorporating in the record, the Clerk's Notice of Rejection. In other words, this entire case involves that single sheet of paper.

The defendant has deferred to the decision of the court, so obviously the easy course is simply to authorize the inclusion of the Clerk's Notice of Rejection in the record. Aside from the fact that this is the simplest resolution of this matter, there is something to be said generally for *inclusion* rather than *exclusion* from the record. Therefore, this is the course that has been chosen.

However, it should be noted that this order requested by plaintiff and being issued makes a matter of record plaintiff's motion to amend the June 22 decision, which motion was late, in fact 16 days late. There is no question but that plaintiff does not allege an "oversight" within the meaning of rule 12.2(a) dealing with "clerical mistakes." This rule doubtless refers to mistakes by the court in making up the record, not those of the litigants. Yet certainly, even if that is not the case, plaintiff's nonaction was not a "clerical mistake", within the meaning of the court rules. Thus, the order of September 13 was issued. It is also noted that ministerial records from the clerk usually are not included in the court record.

For these reasons, plaintiff's motion to thus settle the record is reluctantly granted and it is further ordered that the record as presently constituted, together with the Clerk's Notice of Rejection, be transmitted forthwith to the Clerk of the Court of Customs and Patent Appeals, pursuant to Customs Court Rule 13.1(c).

Decisions of the United States Customs Court

Abstracts

Abstracted Reappraisement Decisions

DEPARTMENT OF THE TREASURY, *December 10, 1979.*

The following abstracts of decisions of the United States Customs Court at New York are published for the information and guidance of officers of the customs and others concerned. Although the decisions are not of sufficient general interest to print in full, the summary herein given will be of assistance to customs officials in easily locating cases and tracing important facts.

ROBERT E. CHASEN,
Commissioner of Customs.

DECISION NUMBER	JUDGE & DATE OF DECISION	PLAINTIFF	COURT NO.	BASIS OF VALUATION	HELD VALUE	BASIS	PORT OF ENTRY AND MERCHANDISE
R79/251	Ford, J. December 4, 1979	Control Data Corp.	R67/4673, etc.	Constructed value	Per unit values as set forth in schedule attached to decision and judgment	Control Data Corporation v. U.S. (C.A.D. 1132)	Minneapolis Inner memory, outer memory, memory, and extended core storage plane assemblies; torodial coils

DECISION NUMBER	JUDGE & DATE OF DECISION	PLAINTIFF	COURT NO.	BASIS OF VALUATION	HELD VALUE	BASIS	PORT OF ENTRY AND MERCHANDISE
R79/252	Landis, J. December 4, 1979	Mitsubishi International Corp.	R68/8242	Constructed value	Total purchase price ($70,256) less ocean freight ($7,741) plus assists ($6,464)	Agreed statement of facts	Cleveland Mechanical equipment (punch presses)
R79/253	Landis, J. December 4, 1979	Mitsubishi International Corp.	R68/8243	Constructed value	Total purchase price ($87,820) less ocean freight ($9,565) plus assists ($8,622)	Agreed statement of facts	Cleveland Mechanical equipment (punch presses)
R79/254	Landis, J. December 4, 1979	Mitsubishi International Corp.	R68/8246	Constructed value	Total purchase price ($52,692) less ocean freight ($5,765) plus assists $(4,856)	Agreed statement of facts	Cleveland Mechanical equipment (punch presses)
R79/255	Landis, J. December 4, 1979	Seaway Forwarding Co.	R68/8241	Constructed value	Total purchase price ($109,200) less ocean freight ($11,552) plus assists ($9,690)	Agreed statement of facts	Cleveland Mechanical equipment (punch presses)
R79/256	Landis, J. December 4, 1979	Seaway Forwarding Co.	R68/8244	Constructed value	Total purchase price ($300,000) less ocean freight ($33,633) plus assists ($20,496)	Agreed statement of facts	Cleveland Mechanical equipment (punch presses)
R79/257	Landis, J. December 4, 1979	Seaway Forwarding Co.	R68/8245	Constructed value	Total purchase price ($109,200) less ocean freight ($12,374) plus assists ($9,690)	Agreed statement of facts	Cleveland Mechanical equipment (punch presses)

Decisions on Motions for Rehearings

December 5, 1979

ATKINS KROLL & CO., LTD. *v.* UNITED STATES, COURT NO. R65/10806.—STEEL PRODUCTS (BARS AND BARS-SHAPES).—C.D. 4821. Motion by plaintiff denied.

December 7, 1979

BORDER BROKERAGE CO., INC. *v.* UNITED STATES, CONSOLIDATED COURT NO. R65/10840.—STEEL REINFORCING BARS.—C.D. 4825. Motion by plaintiff denied.

Rehearing Motion Filed

November 30, 1979

BRANIFF AIRWAYS, INC. *v.* UNITED STATES, COURT NO. 75-3-00646.—MEMORANDUM OPINION ACCOMPANYING ORDER DENYING JUDGMENT ON PLEADINGS AND STIPULATION OF FACTS.—C.R.D. 79-14. Motion by defendant.

International Trade Commission Notices

Investigations by the U.S. International Trade Commission

DEPARTMENT OF THE TREASURY

The appended notices relating to investigations by the U.S. International Trade Commission are published for the information of Customs Officers and others concerned.

R. E. CHASEN,
Commissioner of Customs.

COMPETITIVE STATUS OF CERTAIN BENZENOID CHEMICAL IMPORTS FROM SWITZERLAND AND THE EUROPEAN COMMUNITY

AGENCY: U.S. International Trade Commission.

ACTION: Notice is hereby given that the U.S. International Trade Commission has modified its preliminary determinations with respect to lists of benzenoid chemicals and products notified to the United States by Switzerland and the European Community for the purpose of reviewing the U.S. Customs treatment accorded each chemical or product during 1976, 1977, and 1978, pursuant to investigation No. 225–1, initiated September 18, 1979 (44 F.R. 55442, September 26, 1979).

The annex to this notice is a supplementary list of chemicals and products which should be added to the lists which appeared in 44 F.R. 66082, November 16, 1979, and 44 F.R. 67736, November 27, 1979.

WRITTEN SUBMISSIONS: Interested parties are invited to comment on the Commission's preliminary determination of chemicals and products appearing on the list. Written comments on this supplementary list should be submitted by December 17, 1979.

FOR FURTHER INFORMATION CONTACT: Mr. Ed Cappuccilli, Office of Industries (202–523–0490) or Mr. Holm Kappler, Office of

Nomenclature, Valuation, and Related Activities (202-523-0362), U.S. International Trade Commission, 701 E Street NW., Washington, D.C. 20436.

By order of the Commission.
Issued: December 10, 1979.

KENNETH R. MASON,
Secretary.

ANNEX

Chemicals or products which were not valued on the basis of American selling price and for which a more appropriate and representative rate of duty exists in section 223 of the Trade Agreements Act of 1979

Chemical name/product	Representative period (month/year)	TSUS item number and column 1 rate of duty in sec. 223			
		Existing rate		More appropriate rate	
		TSUS item	Rate (percent)	TSUS item	Rate (percent)
Acid Black 211	May 1977 to May 1978	409.66	30.7	409.62	23.0
Acid Blue 82	April 1976 to April 1977	409.66	30.7	409.62	23.0
Acid Blue 83	August 1976 to August 1977.	409.66	30.7	409.62	23.0
Acid Blue 280	July 1977 to July 1978	409.66	30.7	409.62	23.0
Acid Blue 312	do	409.66	30.7	409.62	23.0
Acid Brown 12	September 1976 to September 1977.	409.66	30.7	409.62	23.0
Acid Green 9	August 1977 to August 1978.	409.66	30.7	409.62	23.0
Acid Green 112	July 1977 to July 1978	409.66	30.7	409.62	23.0
Acid Orange 92	January 1976 to July 1977	409.66	30.7	409.62	23.0
Acid Orange 135	March 1977 to March 1978	409.66	30.7	409.62	23.0
Acid Red 52	October 1977 to October 1978.	409.66	30.7	409.62	23.0
Acid Red 213	October 1976 to October 1977.	409.66	30.7	409.62	23.0
Acid Red 347	January 1976 to January 1977.	409.66	30.7	409.62	23.0
Acid Red 380	do	409.66	30.7	409.62	23.0
Acid Red 394	December 1977 to December 1978.	409.66	30.7	409.62	23.0
Acid Red 396	do	409.66	30.7	409.62	23.0
Acid Yellow 35	do	409.66	30.7	409.62	23.0
Acid Yellow 72	January 1977 to January 1978.	409.66	30.7	409.62	23.0
Acid Yellow 98	December 1977 to December 1978.	409.66	30.7	409.62	23.0
Acid Yellow 195	do	409.66	30.7	409.62	23.0
Acid Yellow 227	November 1977 to November 1978.	409.66	30.7	409.62	23.0
Basic Blue 120	July 1977 to July 1978	409.74	30.9	409.70	22.6
Basic Yellow 77	October 1977 to October 1978.	409.74	30.9	409.70	22.6

See footnote at end of table.

ANNEX—Continued

Chemicals or products which were not valued on the basis of American selling price and for which a more appropriate and representative rate of duty exists in section 223 of the Trade Agreements Act of 1979—Continued

Chemical name/product	Representative period (month/year)	TSUS item number and column 1 rate of duty in sec. 223			
		Existing rate		More appropriate rate	
		TSUS item	Rate (percent)	TSUS item	Rate (percent)
Direct Yellow 134	December 1977 to December 1978.	409.82	28.6	409.78	23.8
Disperse Blue 26:1	do	409.90	27.8	409.86	22.5
Disperse Orange 32	May 1977 to May 1978	409.90	27.8	409.86	22.5
Disperse Orange 42	July 1977 to July 1978	409.90	27.8	409.86	22.5
Disperse Red 185	December 1976 to December 1977.	409.90	27.8	409.86	22.5
Disperse Red 167	September 1977 to September 1978.	409.90	27.8	409.86	22.5
Disperse Red 279	November 1977 to November 1978.	409.90	27.8	409.86	22.5
Disperse Yellow 44	August 1977 to August 1978.	409.90	27.8	409.86	22.5
Disperse Yellow 58	October 1977 to October 1978.	409.90	27.8	409.86	22.5
Disperse Yellow 204	December 1977 to December 1978.	409.90	27.8	409.86	22.5
Dyes containing, by weight, 24.2 percent Acid Yellow 135, 21.7 percent Acid Orange 51, and 54.1 percent Acid Blue 113.[1]	do	409.66	30.7	409.62	23.0
Dyes containing, by weight, 10.1 percent Acid Yellow 64, 11.6 percent Acid Orange 51, 26.3 percent Acid Blue 113, 50.5 percent Acid Black 172, and 1.5 percent Acid Green 25.[1]	December 1977 to December 1978.	409.66	30.7	409.62	23.0
Dyes containing, by weight, 12.7 percent Disperse Yellow 1, 32.3 percent Disperse Orange 1, 19.8 percent Disperse Blue 35, and 35.2 percent Disperse Blue 3.[1]	do	409.90	27.8	409.86	22.5
Dyes containing, by volume, 39 percent Disperse Yellow 39, 28 percent Disperse Orange 25, and 33 percent Disperse Violet 27.[1]	do	409.90	27.8	409.86	22.5
Dyes containing, by weight, 89.4 percent Disperse Violet 27 and 10.6 percent Disperse Green 9.[1]	do	409.90	27.8	409.86	22.5
Dyes containing, by weight, 67.7 percent Disperse Blue 35, 14.2 percent Disperse Yellow 1, and 18.1 percent Disperse Orange 1.[1]	do	409.90	27.8	409.86	22.5
Dyes containing, by volume, 74.3 percent Disperse Blue 285, 18 percent Disperse Brown 19, and 7.7 percent Disperse Yellow 126.[1]	do	409.90	27.8	409.86	22.5

See footnote at end of table.

ANNEX—Continued

Chemicals or products which were not valued on the basis of American selling price and for which a more appropriate and representative rate of duty exists in section 223 of the Trade Agreements Act of 1979—Continued

Chemical name/product	Representative period (month/year)	TSUS item number and column 1 rate of duty in sec. 223			
		Existing rate		More appropriate rate	
		TSUS item	Rate (percent)	TSUS item	Rate (percent)
Dyes containing, by weight, 71 percent Reactive Yellow 85 and 29 percent Reactive Orange 13.[1]	do	410.88	27.8	410.04	20.5
Dyes containing, by weight, 50 percent Reactive Red 120 and 50 percent Reactive Yellow 84.[1]	do	410.88	27.8	410.04	20.5
Dyes containing, by weight, 50 percent Reactive Blue 74 and 50 percent Reactive Blue 63.[1]	do	410.08	27.8	410.04	20.5
Dyes containing, by weight, 66.7 percent Reactive Orange 12 and 33.3 percent Reactive Red 32.[1]	do	410.08	27.8	410.04	20.5
Dyes containing, by weight, 57.9 percent Reactive Blue 13 and 42.1 percent Reactive Black 41.[1]	do	410.08	27.8	410.04	20.5
Pigment Yellow 113	November 1977 to November 1978.	410.32	31.3	410.28	20.4
Pigment Yellow 153	do	410.32	31.3	410.28	20.4
Reactive Blue 6	July 1976 to July 1977	410.08	27.8	410.04	20.5
Reactive Blue 38	March 1976 to March 1977	410.08	27.8	410.04	20.5
Reactive Blue 167	March 1977 to March 1978	410.08	27.8	410.04	20.5
Reactive Blue 170	do	410.08	27.8	410.04	20.5
Reactive Orange 3	August 1976 to August 1977.	410.08	27.8	410.04	20.5
Reactive Orange 89	December 1977 to December 1978.	410.08	27.8	410.04	20.5
Reactive Red 10	April 1974 to April 1977	410.08	27.8	410.04	20.5
Reactive Red 30	August 1976 to August 1977.	410.08	27.8	410.04	20.5
Reactive Red 44	October 1976 to October 1977.	410.08	27.8	410.04	20.5
Reactive Red 49	August 1976 to August 1977.	410.08	27.8	410.04	20.5
Reactive Red 80	May 1977 to May 1978	410.08	27.8	410.04	20.5
Reactive Yellow 42	November 1977 to November 1978.	410.08	27.8	410.04	20.5
Reactive Yellow 125	June 1977 to June 1978	410.08	27.8	410.04	20.5
Reactive Yellow 135	December 1977 to December 1978.	410.08	27.8	410.04	20.5
Solvent Blue 56	August 1976 to August 1977.	410.00	28.0	409.96	19.9
Solvent Green 27	December 1977 to December 1978.	410.00	28.0	409.96	19.9
Solvent Red 89	August 1976 to August 1977.	410.00	28.0	409.96	19.9
Solvent Red 100	January 1976 to January 1977.	410.00	28.0	409.96	19.9

See footnote at end of table.

ANNEX

Chemicals or products which were not valued on the basis of American selling price and for which a more appropriate and representative rate of duty exists in section 223 of the Trade Agreements Act of 1979—Continued

Chemical name/product	Representative period (month/year)	TSUS item number and column 1 rate of duty in sec. 223			
		Existing rate		More appropriate rate	
		TSUS item	Rate (percent)	TSUS item	Rate (percent)
Solvent Red 129	August 1977 to August 1978.	410.00	28.0	409.96	19.9
Solvent Red 162	June 1977 to June 1978	410.00	28.0	409.96	19.9
Solvent Violet 24	December 1977 to December 1978.	410.00	28.0	409.96	19.9
Vat Blue 67	February 1976 to February 1977.	410.16	32.9	410.12	20.9
Vat Red 32	December 1977 to December 1978.	410.16	32.9	410.12	20.9
3-Amino-4-chloro-alpha-phenyl-3-pyridazinone.	July 1977 to July 1978	408.22	1.7¢/lb +15.1%	408.21	1.7¢/lb +12.6%
4-Amino-2-(N,N-diethylamino) toluene hydrochloride.	August 1977 to August 1978.	404.88	1.7¢/lb +18.8%	404.84	1.7¢/lb + 12.4%
1-Amino-8-hydroxynaphthalene 3,6-disulfonic acid.	January 1977 to January 1978.	404.88	1.7¢/lb +18.8%	404.84	1.7¢/lb + 12.4%
2,4-Bis (n-octylthio)-6-(4-hydroxy-3,5-di-tert-butylamino) 1,3,5-triazine.	September 1976 to September 1977.	406.40	1.7¢/lb + 16.2%	406.36	1.7¢/lb + 12.4%
2-sec-Butyl-4-tert-butyl-6-(benzotriazol-2-yl) phenol.	do	406.40	do	406.36	Do.
2-tert-Butyl-4-(2,4-dichloro-5-isopropoxyphenyl) delta² 1,3,4-oxadiazolin-5-one.	August 1976 to August 1977.	408.22	1.7¢/lb + 15.1%	408.21	1.7¢/lb + 12.6%
2-tert-Butyl-4-methyl-6-(5-chlorobenzotriazol-2-yl) phenol.	November 1977 to November 1978.	406.40	1.7¢/lb + 16.2%	406.36	1.7¢/lb + 12.4%
4-(4-Chloro-2-methylphenoxy) butyric acid.	June 1976 to July 1977	408.22	1.7¢/lb + 15.1%	408.21	1.7¢/lb + 12.6%
Chloropromazine	December 1976 to December 1977.	412.34	1.7¢/lb + 41.5%	412.30	1.7¢/lb + 12.6%
P-Chloropyrazolone	July 1977 to July 1978	406.40	1.7¢/lb + 16.2%	406.36	1.7¢/lb + 12.4%
6-Chloro-2-toluidine-4-sulfonic acid.	September 1977 to September 1978.	404.80	1.7¢/lb + 18.8%	404.84	1.7¢/lb + 12.4%
p-Cyanophenyl acetate	November 1977 to November 1978.	405.60	1.7¢/lb + 20.5%	405.60	1.7¢/lb + 12.7%
4,4-Diaminobenzanilide	February 1977 to February 1978.	405.32	1.7¢/lb + 18.1%	405.28	1.7¢/lb + 12.4%
Dibenzcarbinol	August 1976 to August 1977.	405.08	1.7¢/lb + 15.6%	404.92	1.7¢/lb + 12.2%
2,4-Di-tert-butyl-6(5-benzotriazol-2-yl phenol.	November 1977 to November 1978.	406.40	1.7¢/lb + 16.2%	406.36	1.7¢/lb + 12.4%
2,4-Di-tert-butyl-6-(5-chlorobenzotriazol-2-yl) phenol.	August 1977 to August 1978.	406.40	1.7¢/lb+ 16.2%	406.36	1.7¢/lb+ 12.4%
2,5-Dichloroaniline	do	404.88	1.7¢/lb+ 18.8%	404.84	1.7¢/lb+ 12.4%
Di(2,2,6,6-tetramethyl-4-hydroxypiperidine) sebacate.	November 1977 to November 1978.	406.40	1.7¢/lb+ 16.2%	406.36	1.7¢/lb+ 12.4%

See footnote at end of table.

ANNEX

Chemicals or products which were not valued on the basis of American selling price and for which a more appropriate and representative rate of duty exists in section 223 of the Trade Agreements Act of 1979—Continued

Chemical name/product	Representative period (month/year)	TSUS item number and column 1 rate of duty in sec. 223			
		Existing rate		More appropriate rate	
		TSUS item	Rate (percent)	TSUS item	Rate (percent)
Ethyl-(2-dimethylaminoethyl) aniline.	December 1977 to December 1978.	404.88	1.7¢/lb+ 18.8%	404.84	1.7¢/lb+ 12.4%
N-Ethyl-N-(2-methoxycarbonyl-ethyl)aniline.	do	405.08	1.7¢/lb+ 15.6%	404.92	1.7¢/lb+ 12.2%
Etymenazine chlorhydrate	December 1976 to December 1977.	411.56	1.7¢/lb+ 22.8%	411.52	1.7¢/lb+ 12.5%
1,6-Hexane-diol-bis (3,5-di-butyl-4-hydroxyphenyl)-propionate.	December 1977 to December 1978.	404.46	1.7¢/lb+ 17.9%	404.40	1.7¢/lb+ 12.5%
N,N'-Hexamethylene bis-(3,5-di-tert-butyl-4-hydroxyhydro-cinnamamide.	November 1977 to November 1978.	405.32	1.7¢/lb+ 18.1%	405.28	1.7¢/lb+ 12.4%
2-Methyl-5-ethylpyridine	August 1977 to August 1978.	406.40	1.7¢/lb+ 16.2%	404.36	1.7¢lb/+ 12.4%
2,4-Methylcarboxypyrazolic acid	August 1976 to August 1977.	406.40	1.7¢/lb+ 16.2%	406.36	1.7¢/lb+ 12.4%
2-Methylmercaptobenzimidazole	December 1977 to December 1978.	406.40	1.7¢/lb+ 16.2%	406.36	1.7¢/lb+ 12.4%
2,4-Methylpyraziole acid	January 1976 to January 1977.	406.40	do	406.36	Do.
Methyl phenylpyrazolone	October 1977 to October 1978.	406.40	do	406.36	Do.
Tamoxifen citrate	December 1977 to December 1978.	412.48	1.7¢/lb+ 21.7%	412.42	1.7¢/lb+ 13.6%
2,5-Xylidine	November 1977 to November 1978.	404.88	1.7¢/lb+ 18.8%	404.84	1.7¢/lb+ 12.4%

[1] The named percentages are subject to a tolerance of plus or minus 2 percentage points.

Index

U.S. Customs Service

Treasury Decisions: T.D. No.

Bonds: Consolidated Aircraft 80-1

Dextrines and Soluble or Chemically Treated Starches Derived From Potato Starch from the European Community 80-2

Foreign Currencies:

Rates which varied from quarterly rate; Week of Dec. 3-7, 1979 80-5

Daily certified rates; Dec. 3-7, 1979 80-4

Notice of Recordation of Tradename—Xylogics, Inc 80-3

General Notices:

Extension of time for comments—Classification of cab chassis.

Request for public comment—Application of Daisy-Heddon decision.

Customs Service Decisions: Classification: C.S.D. No.

VM & P Naphtha; C.S.D. 79-119 revoked 79-476

Rectangular Steel Plates Cut to Size for Use on Off-Highway Trucks 79-477

Unspun Hemp Baskets and an Abaca Potwrap 79-478

Cotton Upholstery Fabric with Fringes; Ornamentation 79-479

Necessity of Use Certificates for Material Used in the Manufacture of Tires 79-480

Disposable Headwear; Non-Woven Textile Material 79-481

Women's or Girl's Blue Denim Jeans; Ornamentation 79-483

Belting Material 79-485

Racks Imported Alone and Racks and Pinions; Classification under Item 680.44, TSUS 79-486

Woven Polyethylene Strips as Articles for Tariff Purposes 79-488

Texti e Label On Man's Shirt as Ornamentation 79-489

Wax Based Hot Melt Coating Substance; *De Minimis* Rule 79-490

Poster Books; Paperbacks Featuring Lithographically Printed Posters 79-491

Sheath/Sock System To Be Used With Prosthetic Devices 79-492

Steam Turbine Used As Starter Engine for Gas Turbine 79-494

Whether Certain Glass Frit Is Ground or Pulverized 79-495

Glass Panels and Steel Frames Used With Artificial and Natural Illimination 79-496

Whether a Buckled Strap or Drawstring on Raincoat Collars Ornament the Raincoat 79-498

Plastic Sheeting Otherwise Usefully Processed 79-500

Figures Inspired by the Movie "Star Wars" 79-501

Steel Pipe Without A.P.I. Monogram 79-503

Optical Fibers and Fiber Optic Cable 79-504

Unspun Abaca Placemat 79-506

Whether Metal Label on Blue Jeans Ornaments for Tariff Purposes 79-507

C.S.D. No.
Duty Assessment: Imported Merchandise Exported and Then Reimported ---------- 79-497
Export Value: Transactions Between Foreign Parent Corporation and United States Subsidiary Corporation ---------- 79-482
Transactions Between Foreign Parent Corporation and United States Subsidiary Corporation ---------- 79-484
Sales to Selected Purchasers as Fairly Reflective of Market Value; Sections 402 (b) and (f)(1)(B), Tariff Act of 1930, as Amended -- 79-487
Sales and Offers For Sale Within Reasonable Time of Date of Exportation ---------- 79-508
Final List: Electrostatic Copying Machines ---------- 79-505
Liquidated Damages: Federal Income Tax Deductibility ---------- 79-502
Value: Whether a License Fee Paid by an Importer Is Considered Part of the Purchase Price of Goods ---------- 79-499
Vessel Repair:
Fishing Nets Purchased in a Foreign Port ---------- 79-493
Application of Dimetcote, an Inorganic Zinc Coating, to Cargo Tanks and Certain Vessel Areas ---------- 79-509

Customs Court

Amendment of judgment; oversight, C.R.D. 79-16
Construction:
Rules of United States Customs Court:
Rule 12.1(c), C.R.D. 79-16
Rule 12.2, C.R.D. 79-16
Rule 12.2(a), C.R.D. 79-16
Rule 13.1, C.R.D. 79-16
Rule 13.1(c), C.R.D. 79-16
U.S. Code, title 28, sec. 2639, C.R.D. 79-16
Judgment, amendment of, C.R.D. 79-16
Incorporation in record; rejection, notice of, C.R.D. 79-16
Motion to settle record granted; "Notice of Rejection" incorporated in record, C.R.D. 79-16
"Notice of Rejection" incorporated in record; motion to settle record granted, C.R.D. 79-16
Oversight; amendment of judgment, C.R.D. 79-16
Record, motion to settle, C.R.D. 79-16
Rehearing motion applied for (p.); memorandum accompanying order denying judgment on pleadings and stipulation of facts
Rehearings, decisions on motions for, denied (p.):
Steel products (bars and bars-shapes)
Steel reinforcing bars
Rejection, notice of; incorporation in record, C.R.D. 79-16

JAN 1 5 1980 Item 950-D continue
T1.11/3:14/2 Ad.

Customs Bulletin

Regulations, Rulings, Decisions, and Notices concerning Customs and related matters

and Decisions

of the United States Court of Customs and Patent Appeals and the United States Customs Court

9247
307-463
copies 350

Vol. 14 JANUARY 9, 1980 No. 2

This issue contains

T.D. 80-6 through 80-9
General Notice
C.A.D. 1239
C.D. 4829 through 4831
C.R.D. 79-17
Protest abstracts P79/223 and P79/224
Reap. abstracts R79/258 through R79/263
International Trade Commission Notices

THE DEPARTMENT OF THE TREASURY
U.S. Customs Service

NOTICE

The abstracts, rulings, and notices which are issued weekly by the U.S. Customs Service are subject to correction for typographical or other printing errors. Users may notify the U.S. Customs Service, Logistics Management Division, Washington, D.C. 20229, of any such errors in order that corrections may be made before the bound volumes are published.

For sale by the Superintendent of Documents, U.S. Government Printing Office, Washington, D.C. 20402. Price: $1.30 (single copy domestic); $1.65 (single copy foreign). Subscription price: $65.00 a year domestic; $81.25 a year foreign.

U.S. Customs Service

Treasury Decisions

(T.D. 80-6)

Cotton, Wool, and Manmade Fiber Textile Products—Restriction on Entry

Restriction on entry of cotton, wool, and manmade fiber textile products manufactured or produced in Macau

There are published below directives of November 14, 1979, received by the Commissioner of Customs from the acting chairman, Committee for the Implementation of Textile Agreements, concerning restriction on entry of cotton, wool, and manmade fiber textile products in various categories manufactured or produced in Macau. These directives amend, but do not cancel, that committee's directive of December 27, 1978 (T.D. 79-51).

These directives were published in the Federal Register on November 19, 1979 (44 F.R. 66232 and 44 F.R. 66233), by the committee.

(QUO-2-1)

Dated: December 20, 1979.

WILLIAM D. SLYNE
(For G. Scott Shreve, Acting
Director, Duty Assessment Division).

U.S. DEPARTMENT OF COMMERCE,
THE ASSISTANT SECRETARY FOR INDUSTRY AND TRADE,
Washington, D.C. November 14, 1979.

Committee for the Implementation of Textile Agreements

COMMISSIONER OF CUSTOMS,
Department of the Treasury,
Washington, D.C.

DEAR MR. COMMISSIONER: On December 27, 1978, the chairman, Committee for the Implementation of Textile Agreements, directed

you to prohibit entry during the 12-month period beginning on January 1, 1979, and extending through December 31, 1979, of cotton, wool, and manmade fiber textile products, produced or manufactured in Macau, in excess of designated levels of restraint. The chairman further advised you that the levels of restraint are subject to adjustment.[1]

Under the terms of the Arrangement Regarding International Trade in Textiles done at Geneva on December 20, 1973, as extended on December 15, 1977; pursuant to the Bilateral Cotton, Wool and Man-Made Fiber Textile Agreement of March 3, 1974, as amended, between the Governments of the United States and Portugal; and in accordance with the provisions of Executive Order 11651 of March 3, 1972, as amended by Executive Order 11951 of January 6, 1977, you are directed to prohibit, effective on November 19, 1979, and for the 12-month period beginning on January 1, 1979, and extending through December 31, 1979, entry into the United States for consumption and withdrawal from warehouse for consumption of wool textile products in category 445/446, produced or manufactured in Macau, in excess of 64,732 dozen.

Under the previously cited authorities, this directive also amends, but does not cancel, the directive of December 27, 1978, to prohibit, effective on November 19, 1979, and for the 12-month period which began on January 1, 1979, and extends through December 31, 1979, entry into the United States for consumption and withdrawal from warehouse for consumption of manmade fiber textile products in category 647/648, produced or manufactured in Macau, in excess of 201,564 dozen.

The levels of restraint established for category 445/446 and 647/648 have not been adjusted to reflect any imports after December 31, 1978. Imports during the period, January–August 1979, have amounted to 104,378 dozen in category 647/648.

Textile products in category 647/648 which have been exported to the United States prior to January 1, 1979, shall not be subject to this directive.

Textile products in category 647/648 which have been released from the custody of the U.S. Customs Service under the provisions of 19 U.S.C. 1448(b) or 1484(1)(A) prior to the effective date of this directive shall not be denied entry under this directive.

(A detailed description of the textile categories in terms of TSUSA

[1] The terms "adjustment" refers to those provisions of the Bilateral Cotton, Wool and Man-Made Fiber Textile Agreement of Mar. 3, 1975, as amended, between the Governments of the United States and Portugal which provide, in part, that: (1) Within the aggregate and group limits specific levels of restraint may be exceeded by designated percentages; (2) these levels may also be increased for carryover and carryforward up to 11 percent of the applicable category limits; and (3) administrative arrangements or adjustments may be made to resolve minor problems arising in the implementation of the agreement.

numbers was published in the Federal Register on January 4, 1978 (43 F.R. 884), as amended on January 25, 1978 (43 F.R. 3421), March 3, 1978 (43 F.R. 8828), June 22, 1978 (43 F.R. 26773), September 5, 1978 (43 F.R. 39408), January 2, 1979 (44 F.R. 94), March 22, 1979 (44 F.R. 17545), and April 12, 1979 (44 F.R. 21843).)

In carrying out the above directions, entry into the United States for consumption shall be construed to include entry for consumption into the Commonwealth of Puerto Rico.

The actions taken with respect to the Government of Portugal and with respect to imports of manmade fiber textile products from Macau have been determined by the Committee for the Implementation of Textile Agreements to involve foreign affairs functions of the United States. Therefore, the directions to the Commissioner of Customs, which are necessary for the implementation of such actions, fall within the foreign affairs exception to the rulemaking provisions of 5 U.S.C. 553. This letter will be published in the Federal Register.

Sincerely,

PAUL T. O'DAY,
Acting Chairman, Committee for the Implementation of Textile Agreements.

U.S. DEPARTMENT OF COMMERCE,
INDUSTRY AND TRADE ADMINISTRATION,
Washington, D.C., November 14, 1979.

Committee for the Implementation of Textile Agreements

COMMISSIONER OF CUSTOMS,
Department of the Treasury,
Washington, D.C.

DEAR MR. COMMISSIONER: This directive amends, but does not cancel, the directive of December 27, 1978, from the chairman, Committee for the Implementation of Textile Agreements which directed you to prohibit entry during the 12-month period beginning on January 1, 1979, and extending through December 31, 1979, of cotton and manmade fiber textile products in certain specified categories, produced or manufactured in Macau, in excess of designated levels of restraint.

Under the terms of the Arrangement Regarding International Trade in Textiles done at Geneva on December 20, 1973, as extended on December 15, 1977; pursuant to a further amendment to the Bilateral Cotton, Wool and Man-Made Fiber Textile Agreement of March 3, 1975, as amended, between the Governments of the United States and Portugal, you are directed to prohibit, effective on November 19, 1979,

and for the 12-month period beginning on January 1, 1979, and extending through December 31, 1979, entry into the United States for consumption and withdrawal from warehouse for consumption of cotton and manmade fiber textile products in the following categories, produced or manufactured in Macau, in excess of the indicated levels of restraint:

Category	*Amended 12-month level of restraint* [1]
340	99,666 dozen
341	62,069 dozen
641	62,069 dozen

[1] The levels of restraint have not been adjusted to reflect any imports after Dec. 31, 1978.

The actions taken with respect to the Government of Portugal and with respect to imports of cotton and manmade fiber textile products from Macau have been determined by the Committee for the Implementation of Textile Agreements to involve foreign affairs functions of the United States. Therefore, the directions to the Commissioner of Customs, which are necessary for the implementation of such actions, fall within the foreign affairs exception to the rulemaking provisions of 5 U.S.C. 553. This letter will be published in the Federal Register.

Sincerely,

PAUL T. O'DAY,
Acting Chairman, Committee for the Implementation of Textile Agreements.

(T.D. 80-7)

Manmade Fiber Textile Products—Restriction on Entry

Restriction on entry of manmade fiber textile products manufactured or produced in the Philippines

There is published below a directive of November 15, 1979, received by the Commissioner of Customs from the acting chairman, Committee for the Implementation of Textile Agreements, concerning restriction on entry of manmade fiber textile products in category 641, manufactured or produced in the Philippines. This directive amends, but does not cancel, that committee's directive of December 27, 1978 (T.D. 79-42).

This directive was published in the Federal Register on November 20, 1979 (44 F.R. 66649), by the committee.

(QUO-2-1)

Dated: December 20, 1979.

WILLIAM D. SLYNE
(For G. Scott Shreve, Acting Director, Duty Assessment Division).

U.S. DEPARTMENT OF COMMERCE,
INDUSTRY AND TRADE ADMINISTRATION,
Washington, D.C., November 15, 1979.

Committee for the Implementation of Textile Agreements

COMMISSIONER OF CUSTOMS,
Department of the Treasury,
Washington, D.C.

DEAR MR. COMMISSIONER: This directive further amends, but does not cancel, the directive issued to you on December 27, 1978, by the chairman, Committee for the Implementation of Textile Agreements, concerning imports into the United States of certain cotton, wool, and manmade fiber textile products, produced or manufactured in the Philippines.

Under the terms of the Arrangement Regarding International Trade in Textiles done at Geneva on December 20, 1973, as extended on December 15, 1977; pursuant to the Bilateral Cotton, Wool and Man-Made Fiber Textile Agreement of August 22 and 24, 1977, as amended, between the Governments of the United States and the Republic of the Philippines; and in accordance with the provisions of Executive Order 11651 of March 3, 1972, as amended by Executive Order 11951 of January 6, 1977, you are directed to prohibit, effective on November 20, 1979, and for the 12-month period beginning on January 1, 1979, and extending through December 31, 1979, entry into the United States for consumption and withdrawal from warehouse for consumption of manmade fiber textile products in category 641, produced or manufactured in the Philippines, in excess of the following levels of restraint:

Category	*12-month level of restraint* [1]
641 [2]	61,042 dozen

[1] The levels of restraint have not been adjusted to reflect any imports after Dec. 31, 1978. Imports during the period January–September 1979 have amounted to 37,478 dozen.
[2] In category 641, only TSUSA Nos. 382.0460 and 382.8139.

Manmade fiber textile products in the foregoing category which have been exported to the United States prior to January 1, 1979, shall not be subject to this directive.

Manmade fiber textile products in the foregoing category which have been released from the custody of the U.S. Customs Service under the provisions of 19 U.S.C. 1448(b) or 1484(1)(A) prior to the effective date of this directive shall not be denied entry under this directive.

A detailed description of the textile categories in terms of TSUSA

numbers was published in the Federal Register on January 4, 1978 (43 F.R. 884), as amended on January 25, 1978 (43 F.R. 3421), March 3, 1978 (43 F.R. 8828), June 22, 1978 (43 F.R. 26773), September 5, 1978 (43 F.R. 39408), January 2, 1979 (44 F.R. 94), March 22, 1979 (44 F.R. 17545), and April 12, 1979 (44 F.R. 21843).

In carrying out the above directions, entry into the United States for consumption shall be construed to include entry for consumption into the Commonweatlh of Puerto Rico.

The action taken with respect to the Government of the Republic of the Philippines and with respect to imports of manmade fiber textile products from the Philippines has been determined by the Committee for the Implementation of Textile Agreements to involve foreign affairs functions of the United States. Therefore, the directions to the Commissioner of Customs, which are necessary for the implementation of such actions, fall within the foreign affairs exception to the rulemaking provisions of 5 U.S.C. 553. This letter will be published in the Federal Register.

Sincerely,

PAUL T. O'DAY,
Acting Chairman, Committee for the Implementation of Textile Agreements.

(T.D. 80-8)

Cotton and Manmade Fiber Textile Products—Restriction on Entry

Restriction on entry of cotton and manmade fiber textile products manufactured or produced in the People's Republic of China

There is published below a directive of October 29, 1979, received by the Commissioner of Customs from the acting chairman, Committee for the Implementation of Textile Agreements, concerning restriction on entry of cotton and manmade fiber textile products in categories 341 and 635, manufactured or produced in People's Republic of China.

This directive was published in the Federal Register on October 31, 1979 (44 F.R. 62555), by the committee.

(QUO-2-1)

Dated: December 20, 1979.

WILLIAM D. SLYNE
(For G. Scott Shreve, Acting
Director, Duty Assessment Division).

U.S. DEPARTMENT OF COMMERCE,
INDUSTRY AND TRADE ADMINISTRATION,
Washington, D.C., October 29, 1979.

Committee for the Implementation of Textile Agreements

COMMISSIONER OF CUSTOMS,
Department of the Treasury,
Washington, D.C.

DEAR MR. COMMISSIONER: Under the terms of section 204 of the Agricultural Act of 1956, and in accordance with the provisions of Executive Order 11651 of March 3, 1972, as amended by Executive Order 11951 of January 6, 1977, you are directed to prohibit, effective on October 31, 1979, and for the 12-month period beginning on October 31, 1979, and extending through October 30, 1980, entry into the United States for consumption and withdrawal from warehouse for consumption of cotton and manmade fiber textile products in categories 341 and 635, produced or manufactured in the People's Republic of China, in excess of the following levels of restraint:

Category	*12-month level of restraint*
341	266,196 dozen
635	110,551 dozen

Cotton and manmade fiber textile products in categories 341 and 635 that have been exported before October 31, 1979, shall not be subject to this directive.

Cotton and manmade fiber textile products in categories 341 and 635 which have been released from the custody of the U.S. Customs Service under the provisions of 19 U.S.C. 1448(b) or 1484(a)(1)(A) prior to the effective date of this directive shall not be denied entry under this directive.

A detailed description of the categories in terms of TSUSA numbers was published in the Federal Register on January 4, 1978 (43 F.R. 884), as amended on January 25, 1978 (43 F.R. 3421), March 3, 1978 (43 F.R. 8828), June 22, 1978 (43 F.R. 26773), September 5, 1978 (43 F.R. 39408), January 2, 1979 (44 F.R. 94), March 22, 1979 (44 F.R. 17545), and April 12, 1979 (44 F.R. 21843).

In carrying out these directions, entry into the United States for consumption shall be construed to include entry for consumption into the Commonwealth of Puerto Rico.

The actions taken with respect to the Government of the People's Republic of China and with respect to imports of cotton and manmade fiber textile products from China have been determined by the Committee for the Implementation of Textile Agreements to involve foreign affairs functions of the United States. Therefore, the directions to the

307-463—80——2

Commissioner of Customs, being necessary to the implementation of such actions, fall within the foreign affairs exception to the rulemaking provisions of 5 U.S.C. 553. This letter will be published in the Federal Register.

Sincerely,

PAUL T. O'DAY,
Acting Chairman, Committee for the Implementation of Textile Agreements.

(T.D. 80-9)

Cotton Textiles and Cotton Textile Products—Restriction on Entry

Restriction on entry of cotton textiles and cotton textile products manufactured or produced in Pakistan

There are published below directives of November 8 and November 14, 1979, received by the Commissioner of Customs from the acting chairman, Committee for the Implementation of Textile Agreements, concerning restriction on entry of cotton textiles and cotton textile products in categories 315 and 341, manufactured or produced in Pakistan. These directives amend but do not cancel, that committee's directive of December 27, 1978 (T.D. 79-45).

These directives were published in the Federal Register on November 15, and November 19, 1979 (44 F.R. 65811 and 44 F.R. 66234), respectively, by the committee.

(QUO-2-1)

Dated: December 20, 1979.

WILLIAM D. SLYNE
(For G. Scott Shreve, Acting Director, Duty Assessment Division).

U.S. DEPARTMENT OF COMMERCE,
INDUSTRY AND TRADE ADMINISTRATION,
Washington, D.C., November 8, 1979.

Committee for the Implementation of Textile Agreements

COMMISSIONER OF CUSTOMS,
Department of the Treasury,
Washington, D.C.

DEAR MR. COMMISSIONER: On December 27, 1978, the chairman, Committee for the Implementation of Textile Agreements, directed you to prohibit entry for consumption, or withdrawal from warehouse for consumption, during the 12-month period beginning on January 1,

1979, and extending through December 31, 1979, of cotton textile products in certain specified categories, produced or manufactured in Pakistan, in excess of designated levels or restraint. The chairman further advised you that the levels of restraint are subject to adjustment.[1]

Under the terms of the Arrangement Regarding International Trade in Textiles done at Geneva on December 20, 1973, as extended on December 15, 1977; pursuant to the Bilateral Cotton Textile Agreement of January 4 and 9, 1978, as amended, between the Governments of the United States and Pakistan; and in accordance with the provisions of Executive order 11651 of March 3, 1972, as amended by Executive Order 11951 of January 6, 1977, you are directed, effective on November 15, 1979, to increase the 12-month level of restraint established for cotton textile products in category 341 to 155,862 dozen.[2]

The action taken with respect to the Government of Pakistan and with respect to imports of cotton textile products from Pakistan has been determined by the Committee for the Implementation of Textile Agreements to involve foreign affairs functions of the United States. Therefore, the directions to the Commissioner of Customs, being necessary to the implementation of such actions fall within the foreign affairs exception to the rulemaking provisions of 5 U.S.C. 553. This letter will be published in the Federal Register.

Sincerely,

PAUL T. O'DAY,
Acting Chairman, Committee for the Implementation of Textile Agreements.

U.S. DEPARTMENT OF COMMERCE,
INDUSTRY AND TRADE ADMINISTRATION,
Washington, D.C., November 14, 1979.

Committee for the Implementation of Textile Agreements

COMMISSIONER OF CUSTOMS,
Department of the Treasury,
Washington, D.C.

DEAR MR. COMMISSIONER: This directive further amends, but does not cancel, the directive issued to you on December 27, 1978,

[1] The term "adjustment" refers to those provisions of the Bilateral Cotton Textile Agreement of Jan. 4 and 9, 1978, between the Governments of the United States and Pakistan, which provides, in part, that: (1) Within the aggregate and applicable group limits of the agreement, specific levels of restraint may be exceeded by designated percentages; (2) these same levels may be increased for carryover and carryforward; and (3) administrative arrangements for adjustments may be made to resolve minor problems arising in the implementation of the agreement.

[2] The level of restraint has not been adjusted to reflect any imports after Dec. 31, 1978.

by the chairman Committee for the Implementation of Textile Agreements, concerning imports into the United States of certain cotton, wool, and manmade fiber textile products, produced or manufactured in Pakistan.

Under the terms of the Arrangement Regarding International Trade in Textiles done at Geneva on December 20, 1973, as extended on December 15, 1977; pursuant to the Bilateral Cotton Textile Agreement of January 4 and 9, 1978, as amended, between the Governments of the United States and Pakistan; and in accordance with the provisions of Executive Order 11651 of March 3, 1972, as amended by Executive Order 11951 of January 6, 1977, you are directed to prohibit, effective on November 16, 1979, and for the 12-month period beginning on January 1, 1979, and extending through December 31, 1979, entry into the United States for consumption and withdrawal from warehouse for consumption of cotton textile products in category 315, produced or manufactured in Pakistan, in excess of the following level of restraint:

Category	*Adjusted 12-month level of restraint* [1]
315	26,500,000 square yards

[1] The level of restraint has not been adjusted to reflect any imports after Dec. 31, 1978.

The actions taken with respect to the Government of Pakistan and with respect to imports of cotton, wool, and manmade fiber textile products from the Pakistan has been determined by the Committee for the Implementation of Textile Agreements to involve foreign affairs functions of the United States. Therefore, the directions to the Commissioner of Customs, which are necessary for the implementation of such actions, fall within the foreign affairs exception to the rulemaking provisions of 5 U.S.C. 553. This letter will be published in the Federal Register.

Sincerely,

PAUL T. O'DAY,
Acting Chairman, Committee for the Implementation of Textile Agreements.

U.S. Customs Service

General Notice

Availability of Reprinted Looseleaf Edition of Customs Regulations

AGENCY: U.S. Customs Service, Department of the Treasury.

ACTION: Notice of availability.

SUMMARY: This document informs the public that an updated reprinted looseleaf edition of the Customs Regulations (19 CFR ch. I) is available from the Government Printing Office. In addition to the Customs Regulations, including all changes made through December 31, 1978 (T.D. 78–494), the reprint includes Treasury Department and Customs Service delegation orders, and an appendix containing the text of, or references to, sections of law and the text of regulations administered by other Government departments or agencies and enforced wholly or in part by Customs.

FOR FURTHER INFORMATION CONTACT: Shannon McCarthy, Regulations and Research Division, U.S. Customs Service, 1301 Constitution Avenue NW., Washington, D.C. 20229; 202–566–8237.

SUPPLEMENTARY INFORMATION:

BACKGROUND

The regulations of the Customs Service, codified in title 19, chapter I, Code of Federal Regulations (19 CFR ch. I), have been issued by the Commissioner of Customs, with the approval of the Secretary of the Treasury, for the purpose of carrying out the Customs and navigation laws and other laws administered by Customs.

Title 19, Code of Federal Regulations, is published annually, revised as of April 1 of each year, by the Office of the Federal Register. In the interest of having the regulations as up to date as possible, Customs has the Government Printing Office print a looseleaf edition which is updated by the issuance of sets of revised pages three or four times each year. In addition to the regulations, the looseleaf edition also includes orders of the Secretary of the Treasury relating to the rights, privileges, powers, and duties of the Commissioner of Customs

and other Customs personnel, and Customs Delegation orders. An appendix to the looseleaf edition contains the text of, or references to, sections of law and the text of regulations administered by other Government departments or agencies and enforced wholly or in part by Customs.

Numerous sets of revised pages to the regulations have been issued since the last general reprint was prepared in 1976. As part of an ongoing program to improve the utility of the regulations, Customs has prepared a new reprint, including all changes through December 31, 1978 (T.D. 78–494). It is anticipated that there will be another reprinting during the first quarter of 1980, which will include all changes through December 31, 1979.

Orders for the new reprint are now being accepted by the Government Printing Office. Current subscribers will receive the reprint automatically. New subscribers may order the reprint by requesting the "Customs Regulations of the United States. [CRUS] (file code 1F)" from the Superintendent of Documents, U.S. Government Printing Office, Washington, D.C. 20402. The yearly subscription price of $37 will entitle subscribers to receive the 1980 as well as the 1979 reprint.

A different printing process and format have been used for this reprint. While every effort has been made to insure correctness, users may notify the U.S. Customs Service, Regulations and Research Division, Washington, D.C. 20229, of any typographical or printing errors in order that corrections may be made. Suggestions for improvements also are requested.

Dated: December 26, 1979.

WILLIAM T. ARCHEY,
Acting Commissioner of Customs.

[Published in Federal Register, Dec. 31, 1979 (44 F.R. 77294)]

Decisions of the United States Court of Customs and Patent Appeals

(C.A.D. 1239)

SCHOTT OPTICAL GLASS, INC. *v.* THE UNITED STATES, No. 79-18

1. CLASSIFICATION OF IMPORTS—OPTICAL GLASS.

Appeal from judgment of U.S. Customs Court in *Schott Optical Glass, Inc.* v. *United States*, 82 Cust. Ct.—, C.D. 4783 (1979), which affirmed denial by Customs Service of Schott's protest to classification of its imported merchandise as "optical glass." Affirmed.

2. ID.—COMMON MEANING.

When not otherwise defined in TSUS or indicated by legislative history, correct meaning of a term in a tariff provision is common meaning understood in trade and commerce.

3. Ip.

What constitutes common meaning of tariff term is not question of fact but question of law, and in ascertaining that common meaning the court may consult dictionaries, scientific authorities, and other reliable sources of information.

4. ID.—INTENT OF CONGRESS.

Congress is presumed to attach common meaning to term in tariff provision, and legislative history may be dispositive of issue over common meaning.

5. ID.—PHYSICAL SHAPE OF GLASS.

Phrase "in any form" in 540.67 TSUS refers to physical shape of glass rather than to material or quality of construction.

6. ID.—COMMON MEANING OF OPTICAL GLASS.

Common meaning of "optical glass" embraces concept of "high quality" with respect to each of various optical properties—absorption, refraction, polarization, etc. A criterion for determining "high quality" with respect to one property may apply exclusively to that property (*e.g.*, refractive index applies only to refractive property) or may also apply in determining "high quality" with

respect to other properties (*e.g.*, homogeneity applies to both properties of absorption and refraction). When a glass is selected for a particular property, proper inquiry is whether the glass is of "high quality" with respect to that property, and quality with respect to other properties is immaterial.

U.S. Court of Customs and Patent Appeals, December 20, 1979

Appeal from U.S. Customs Court, C.D. No. 4783

[Affirmed.]

Richard C. King, Fitch, King and Caffentzis, attorney of record for appellant. *Alice Daniel*, Acting Assistant Attorney General, *David M. Cohen*, Director, Commercial Litigation Branch, *Joseph I. Liebman*, Attorney in Charge, Field Office, Madeline B. Kuflik, attorney of record for appellee.

[Oral argument on October 3, 1979, by Richard C. King for appellant and Madeline B. Kuflik for appellee.]

Before MARKEY, *Chief Judge*, RICH, BALDWIN, and MILLER, *Associate Judges*, and WATSON,* *Judge*.

MILLER, Judge.

This is an **[1]** appeal from the judgment of the U.S. Customs Court in *Schott Optical Glass, Inc.* v. *United States*, 82 Cust. Ct. ——, C.D. 4783 (1979), which affirmed the denial by the Customs Service of Schott's protest to classification of its imported merchandise as "optical glass." We affirm.

Background

The imported merchandise consists of pieces of glass which are 6½ inches square and colored in shades of red, green, blue, yellow, and gray. It was classified under Tariff Schedules of the United States (TSUS) item 540.67 [1] as "optical glass." Schott claimed classification as colored or special flat glass under item 542.92.[2]

---

*The Honorable James L. Watson of the U.S. Customs Court, sitting by designation.

[1] The pertinent provisions are as follows:

Tariff Schedules of the United States ("TSUS"):
Schedule 5.—NONMETALLIC MINERALS AND PRODUCTS
Part 3.—Glass and Glass Products
A. Glass in the Mass; Glass in Balls, Tubes, Rods, and Certain Other Forms; Foam Glass; Optical Glass; and Glass Fibers and Products Thereof
Optical glass in any form, including blanks for spectacle lenses and for other optical elements; non-optical-glass blanks for corrective spectacle lenses; synthetic optical crystals in the form of ingots, segments of ingots, sheets, or blanks for optical elements; all the foregoing not optically worked; polarizing material, in plates or sheets, not cut to shape or mounted for use as polarizing optical elements:

* * * * * * *

540.67	Other optical glass and synthetic optical crystals; polarizing material	40% ad val.

[2] The relevant provisions state:

Schedule 5.—NONMETALLIC MINERALS AND PRODUCTS
Part 3.—Glass and Products
B. Flat Glass and Products Thereof

* * * * * * *

Colored or special glass: Weighing over 28 oz. per sq. ft.:

542.92	Not over 2⅔ sq. ft. in area	0.7¢ per lb. + 2.5% ad val.

From its examination of the legislative history of TSUS 540.67 and pertinent case law the Customs Court concluded that glass which is: (a) Very high quality, (b) used for optical instruments, and (c) capable of performing an optical function meets the definition of "optical glass" for tariff purposes, citing *Semon Bache & Co.* v. *United States*, 25 CCPA 239, T.D. 49339 (1937), *G.A.F. Corp., George S. Bush & Co.* v. *United States*, 67 Cust. Ct. 167, C. D. 4269 (1971), and *Ednal Vo.* v. *United States*, 6 Cust. Ct. 552, Abs. 45423 (1941). The Customs Court declared that, based on the presumption of correctness that attaches to the classifying officer's decision, the foregoing indicia were presumed to be applicable to the involved merchandise; further, that the evidence supported the presumption. It noted that appellant was not in disagreement with these indicia, but, rather, had agrued that an additional factor must be present, namely: The glass must have a refractive index and dispersion which are known and controlled to very close tolerances (a degree of four to six decimal places). On this issue, the Customs Court held that appellant failed to sustain its burden of proof by a preponderance of the credible evidence.

Opinion

It is well settled in Customs law that, [2] when not otherwise defined in the TSUS or indicated by legislative history, the correct meaning of a term in a tariff provision is the common meaning understood in trade and commerce. *United States* v. *Rembrandt Electronics, Inc.*, 64 CCPA 1, 542 F. 2d 1154 (1976), *Barnebey-Cheney Co.* v. *United States*, 61 CCPA 10, 487 F. 2d 553 (1973); and *Trans-Atlantic Co.* v. *United States*, 60 CCPA 100, 471 F. 2d 1397 (1973). It is also well settled that [3] what constitutes the common meaning of a tariff term is not a question of fact but a question of law. In ascertaining the common meaning of a tariff term, the court may consult dictionaries, scientific authorities, and other reliable sources of information. *Trans-Atlantic Co.* v. *United States, supra; Nomura (America) Corp.* v. *United States*, 62 Cust. Ct. 524, 299 F. Supp. 535 (1969), *aff'd*, 58 CCPA 82, 453 F. 2d 1319 (1971). [4] Congress is presumed to attach the common meaning to a term in a tariff provision, and the legislative history may be dispositive of an issue over common meaning. *Certified Blood Donor Services, Inc.* v. *United States*, 62 CCPA 66, 70, C.A.D. 1147 (1975).

TSUS General Rule of Interpretation 10(c) provides that:

> (c) An imported article which is described in two or more provisions of the schedules is classifiable in the provision which most specifically describes it; but, in applying this rule of interpretation, the following considerations shall govern:

> (i) a superior heading cannot be enlarged by inferior headings indented under it but can be limited thereby;
>
> (ii) comparisons are to be made only between provisions of coordinate or equal status, i.e., between the primary or main superior headings of the schedules or between coordinate inferior headings which are subordinate to the same superior heading * * *.

Applying this rule, it is clear that the meaning of "other optical glass" in 540.67 cannot be broader than "[o]ptical glass in any form" in its superior heading. It is also clear that [5] the phrase "in any form" refers to the physical shape of the glass rather than to a material or quality of construction. *United States* v. *Central Scientific Co.*, 21 CCPA 214, T.D. 46749 (1933).

In considering the common meaning of "optical glass," we note that the "*Tariff Classification Study*," schedule 5, part 3, 128 (1960), states that 540.67 "covers: (1) Prisms and optical elements other than lenses, of glass, not optically worked, now dutiable * * * as scientific articles of glass; (2) optical glass other than in the form of lenses or prisms; (3) synthetic optical crystals other than in the form of ingots; and (4) polarizing material of any substance in sheets or plates." Regarding the latter it stated:

> The existing tariff has no specific provision for polarizing material in sheet or plate form. * * * The sheets or plates are cut to shape to make polarizing elements for microscopes and other optical instruments, for sunglasses, and for spectacles for viewing three-dimensional movies, and for other uses. * * * It is possible that they would be classifiable in glass provisions or by similitude to glass articles. They are therefore being assimilated in the schedule at this point, at the rate applicable to optical glass.

The description of "optical glass" in the "Summaries of Trade and Tariff Information," schedule 5, volume 4, 33 (1968), "covers *not-optically-worked* [3] articles such as optical glass in any form * * *" (italic added and footnote omitted). The "Summaries" also state: "Optical glass is clear, high-quality glass that meets precision specifications as to its chemical composition, homogeneity, and freedom from physical defects." It is silent on refraction and dispersion properties.

The "Encyclopedia Brittanica," volume 10 (1955), 419B, cited by the Customs Court, states:

> Optical glass differs from other types of glass in two essential characteristics. The first of these is its freedom from imperfections, of which the most common are unmelted particles, commonly called stones; bubbles; and chemical inhomogeneity, which

[3] The "Summaries" define "not-optically-worked" to mean the glass has not been subjected to any grinding or polishing incident to surface shaping for producing optical properties.

> produces regions or streaks of differing refractive index called striae. The elimination of striae is the most difficult problem in the manufacture of optical glass. The glass must also be physically homogeneous and free from mechanical strain, which is effected by an annealing treatment under conditions determined by the composition of the glass.
>
> The second fundamental characteristic of optical glass is that it can be obtained in a wide range of optical properties. For the manufacture of corrected lens systems, glasses must be available having not only a wide range of refractive index (n_D) but also of dispersion; and for many special cases there is required knowledge not only of the mean dispersion ($n_F n_C$) but also of the partial dispersion ($n_D - n_C$, $n_F - n_D$, and $n_G - n_C$). These properties, and a quantity commonly given in optical glass catalogs is the V value [the combined formula for the V value is printed here]. Glasses are available having refractive index from 1.48 (fluor crowns) to 1.8 (extra dense flints) or even higher.

The testimony of appellant's witness, Dr. Norbert J. Kreidl (professor of ceramic engineering at the University of Missouri and author of more than 100 papers in the field of glass science) explains what is meant by "a wide range of optical properties"—the phrase used in the "Encyclopedia Brittanica" statement. According to him, optical property "means the way light behaves when it passes through a material," and optical properties include absorption, refraction, transmission, reflection, dispersion, polarization, fluorescence, emission, electromagnetic effects, electro-optical effects, and magnetic optical effects; in short, any effect visible in the material when light strikes it.

In view of the foregoing, we are persuaded that [6] the common meaning of "optical glass" embraces the concept of "high quality" with respect to each of the various properties described above, absorption, refraction, polarization, etc. A criterion for determining "high quality" with respect to one property may apply exclusively to that property (e.g., refractive index applies only to the refractive property) or may also apply in determining "high quality" with respect to other properties (e.g., homogeneity applies to both the properties of absorption and refraction). When a glass is selected for a particular property, the proper inquiry is whether the glass is of "high quality" with respect to that property, and the quality with respect to other properties is immaterial.

In the case of glass in which the refraction property is critical, at least two criteria must be met. As described by Dr. Kreidl:

> [O]ne is a very careful knowledge of the chemical composition, that means both the deliberate addition of the necessary chemicals and the guaranty in the processing that this intended composition is actually obtained. The second is the refractive index to the degrees specified in a good optical glass is strongly affected by

> the way it is cooled down or annealed. The lack of knowledge or lack of patience in the time allowed for it could lead to serious deviations of the [refractive] index and even in the fourth [decimal] place.

In the case of glass in which the absorption property is critical, Dr. Kreidl stated that the degree of uniformity of color in the glass (homogeneity) must be "very great," although he added that "you do not require that this homogeneity is to the numbers stated in an optical glass." Nevertheless, the unrebutted testimony of the Government's witnesses[4] clearly establishes that the involved Schott glass is of very high or of the highest quality available in glass chosen for its absorption property.

The Customs Court found that the Government had submitted "competent, reliable, and credible affirmative evidence" to support the presumption that the involved merchandise is within the common meaning of the provision for optical glass

Appellant argues that "optical glass" must have a refractive index and dispersion controlled to very close tolerances (four to six decimal places for refractive index) and that such a controlled refractive index results from a more careful selection and control of materials and from an annealing process of much greater length and sophistication than for other glass. However, this argument applies to glass in which the refraction property is critical; whereas the absorption property is critical in the glass with which this case is concerned.

Accordingly, we hold that the involved Schott glass is "optical glass" for purposes of TSUS item 540.67.

The judgment of the Customs Court is *affirmed.*

Richard L. Stevenson v. *International Trade Commission, New Zeal Enterprises Co., Prophet International Co., Lido Trading Co., Ltd., Hardy Enterprise Corp.*, No. 79–12

1. SECTION 337, TARIFF ACT OF 1930, AS AMENDED.

Action of U.S. International Trade Commission, terminating its investigation of the importation of certain skateboards in view of its determination of no violation of Tariff Act Section 337 based on its holding of invalidity of patent allegedly infringed by the imported skateboards, reversed and remanded.

---

[4] Dr. Radu Mavrodineanu of the special analytical instrumentation section at the National Bureau of Standards, author of some 70 papers in applied optics; Richard N. Mostrom, holder of a master of science degree in optical engineering from the Institute of Optics, University of Rochester, and employed by Honeywell, Inc., in the area of optical systems and optical instrument design; and Robert C. Saxton, holder of a bachelor of science degree in chemical engineering from Tri-State College, and employed for 28-years at the Product Engineering Division of Corning Glass Works, the last 9 years in the optical products department working entirely with color filter glass.

2. Obviousness, 35 U.S.C. 103.

Determination of obviousness under 35 U.S.C. 103 is a legal conclusion based on factual evidence; upon review CCPA will make an independent determination as to the legal conclusions and inferences which should be drawn from the findings of fact.

3. Id.—Prior Art.

Whether certain art is to be considered prior art requires consideration of similarities and differences in structure and function of the inventions disclosed in the references.

4. Presumption of Validity, 35 U.S.C. 282.

Proof of the existence of anticipating devices must be clear and convincing to overcome the presumption of validity in 35 U.S.C. 282.

5. Id.

In determination of obviousness, 35 U.S.C. 282 requires a presumption of validity, with the burden of persuasion remaining on party asserting invalidity.

6. Id.—Commercial Success.

Secondary considerations such as commercial success must also be evaluated in determining the final validity of a determination of obviousness.

7. Evidence of Record.

Evidence of record to rebut prima facie nexus between commercial success and the merit of the invention, opinion testimony of a witness with a demonstrated financial interest in the outcome, is insufficient to overcome evidentary value of evidence establishing nexus.

8. Id.

There is no evidence of record to suggest that at the time of appellant's invention, the upswept tail of the rocker skateboard would function to provide improved maneuverability.

9. Claims.

A broad claim is not construed to contain limitations expressed in the more narrow claims.

10. Term Coupled."

The term "coupled" is sufficiently broad to read on a one-piece molded skateboard construction.

11. Fraud—Inequitable Conduct.

Absent any evidence of bad faith on the part of appellant, CCPA is precluded from any finding of fraud or inequitable conduct.

12. Id.

Bare assertions by appellees, unsupported by any evidence, cannot provide clear and convincing evidence required to establish fraud or inequitable conduct.

U.S. Court of Customs and Patent Appeals, December 20, 1979

Appeal from International Trade Commission, Investigation No. 337-TA-37

[Reversed and remanded.]

Keith D. Beecher, Attorney of record for appellant.

Russell N. Shewmaker, General Counsel, *Jeffrey M. Lang*, Deputy General Counsel, *N. Tim Yaworski*, attorneys of record for appellee, International Trade Commission, *Myron Solter* and *David Simon*, attorneys of record for appellees New Zeal Enterprises Co., et al.

[Oral argument on October 3, 1979, by Keith D. Beecher, for appellant and by N. Tim Yaworski for International Trade Commission and David Simon for New Deal Enterprises Co., et al.]

Before MARKEY, *Chief Judge*, RICH, BALDWIN and MILLER, *Associate Judges*, and WATSON, *Judge*.*

BALDWIN, Judge.

[1]This is an appeal from the November 13, 1978 order of the U.S. International Trade Commission (Commission) which terminated investigation No. 337-TA-37, "In the Matter of Certain Skateboards and Platforms Therefor," in view of its determination that no violation of section 337 of the Tariff Act of 1930, as amended by the Trade Act of 1974, 19 U.S.C. 1337,[1] exists in the importation into, or sale in, the United States of certain skateboards and platforms therefor. We reverse and remand.

Background

On November 4, 1977, appellant, Richard L. Stevenson (Stevenson) filed an amended complaint with the Commission pursuant to sec-

---

* The Honorable J. L. Watson, U.S. Customs Court, sitting by designation.

[1] 19 U.S.C. 1337 provides, in pertinent part:

§ 1337. *Unfair practices in import trade—Unfair methods of competition declared unlawful*

(a) Unfair methods of competition and unfair acts in the importation of articles into the United States, or in their sale by the owner, importer, consignee, or agent of either, the effect or tendency of which is to destroy or substantially injure an industry, efficiently and economically operated, in the United States, or to prevent the establishment of such an industry, or to restrain or monopolize trade and commerce in the United States, are declared unlawful, and when found by the Commission to exist shall be dealt with, in addition to any other provisions of law, as provided in this section

* * * * * * *

Determinations; review

(c) The Commission shall determine, with respect to each investigation conducted by it under this section, whether or not there is a violation of this section. Each determination under subsection (d) or (e) of this section shall be made on the record after notice and opportunity for a hearing in conformity with the provisions of subchapter II of chapter 5 of title 5. All legal and equitable defenses may be presented in all cases. Any person adversely affected by a final determination of the Commission under subsection (d) or (e) of this section may appeal such determination to the U.S. Court of Customs and Patent Appeals. Such court shall have jurisdiction to review such determination in the same manner and subject to the same limitations and conditions as in the case of appeals from decisions of the U.S. Customs Court.

Exclusion of articles from entry

(d) If the Commission determines, as a result of an investigation under this section, that there is violation of this section, it shall direct that the articles concerned, imported by any person violating the provision of this section, be excluded from entry into the United States, unless, after considering the effect of such exclusion upon the public health and welfare, competitive conditions in the U.S. economy, the production of like or directly competitive articles in the United States and U.S. consumers, it finds that such articles should not be excluded from entry. The Commission shall notify the Secretary of the Treasury of its action under this subsection directing such exclusion from entry, and upon receipt of such notice, the Secretary shall, through the proper officers, refuse such entry.

tion 337, alleging that unfair methods of competition exist in the importation and distribution of certain skateboards alleged to infringe claims 1, 2, 7, and 8 of U.S. patent No. 3,565,454 to Stevenson. The filing date of the Stevenson patent is June 12, 1969. Claim 1 is the broadest claim, and reads:

1. A sport maneuvering device comprising:
   a. an elongated platform for supporting a person, the platform having a forward end section and a rearward end section;
   b. wheels coupled to and beneath the platform; and
   c. an inclined foot-depressible lever coupled to the rearward end section of the platform, the lever being oriented so its plane slopes upwardly and rearwardly from the platform wherein a person positioned with one foot on the platform and the other foot resting on the lever may tilt the platform to a desired position by depressing the lever.

The subject device of the claims at issue is commonly known as a kicktail skateboard.

Foreign manufacturers and exporters named and served in the investigation were New Zeal Enterprises Co., Ltd., Lido Trading Co., Ltd., Prophet International Co., Ltd., Hardy Enterprise Corp., and Amapala Marine (name corrected to S. K. B. de Hondiuras [sic] by order issued March 31, 1978). Importers named and served were Sportmaster, Inc., Marco Polo Co., National Sporting Goods Corp., Dixie Trading Co., and Woodline Products Co. The only named respondents to appear at the hearing (referred to collectively as the "Taiwan manufacturers") were New Zeal Enterprises, Co., Ltd., Prophet International Ltd., Lido Trading Co., Ltd., and Hardy Enterprise Corp. It was stipulated by the active parties that all named respondents were engaged in either export to or importation into the United States of the articles in question.[2]

An evidentiary hearing was conducted by a Commission Administrative Law Judge (ALJ). His recommendation was that the Commission determine that there is no violation of section 337 in the importation and sale in the United States of skateboards and platforms therefore meeting claims 1, 2, 7, and 8 of the Stevenson patent. This recommendation resulted from his conclusion that the subject claims are invalid as obvious under 35 U.S.C. 103 in view of prior art.

---

[2] The Commission's brief reports that the following stipulations were entered into by the active parties below:

(1) There is importation of the skateboards in question into the United States;

(2) There is an industry devoted to production of the skateboards in question in the United States;

(3) The U.S. industry is composed of appellant and his licensees;

(4) The U.S. industry is efficiently and economically operated;

(5) Importation of the skateboards in question has the effect or tendency to destroy or substantially injure the U.S. industry; and

(6) If infringement is found as to one of the accused imported skateboards (staff exhibit No. 5 (SX-5)), then all the accused imported skateboards infringe the Stevenson patent.

The Commission, with Chairman Parker dissenting and Commissioner Stern not participating, ordered the investigation terminated on the basis of a determination that no violation of section 337 exists. As reflected in the joint opinion of Commissioners Moore and Bedell and the concurring opinion of Commissioner Alberger, the basis of this determination was the finding that claims 1, 2, 7, and 8 of the patent to Stevenson are invalid for purposes of section 337 as obvious in view of prior art pursuant to 35 U.S.C. 103.[3]

Issue

We face the dispositive issue whether the subject matter of claims 1, 2, 7, and 8 of the patent to Stevenson would have been obvious to one of ordinary skill in the art of designing skateboards at the time the invention was made.

Opinion

Standard of Review

The Commission's brief argues that the standard of review in this case is whether the determination of the Commission is clearly contrary to the weight of the evidence before it. We do not agree.

This determination was based on the Commission's finding that the subject claims of the Stevenson patent were invalid as obvious in view of prior art under 35 U.S.C. 103 **[2]** However, "obviousness is a legal conclusion based on factual evidence, *Graham* v. *John Deere Co.*, [383 U.S. 1, 148 USPQ 459 (1966)] * * * and not a factual determination." *In re Warner*, 54 CCPA 1628, 1634 n.6, 379 F. 2d 1011, 1016 n.6, 154 USPQ 173, 177 n.6 (1967). Therefore the proper issue before us is whether the Commission erred, as a matter of law, in holding that the claims were invalid under 35 U.S.C. 103. In deciding this issue, the court will make "an independent determination as to the legal conclusions and inferences which should be drawn from [the findings of fact]." See *United States* v. *Mississippi Valley Generating Co.*, 364 U.S. 520, 526 (1961).

Prior Art

Under section 103, the scope and content of the prior art are to be determined; differences between the prior art and the claims at issue are to be ascertained; and the level of ordinary skill in the pertinent

---

Commissioners Moore and Bedell, in their joint opinion, reasoned that:

The functional advantages of the kicktail skateboard relative to the rocker skateboard arise from the fact that the front portion of the former is flat whereas that of the latter is curved. The continuously curved shape of the rocker board causes a dip in the center portion of the board that deepens as the curvature of the board increases. This dip can cause balance problems for the rider attempting to perform "wheelies," as well as increasing the likelihood that the center portion of the board will scrape against the ground. The presiding officer [ALJ] found that it would have been obvious to a person of ordinary skill at the time the kicktail invention was made to eliminate the rocker board's balance and grounding problems by simply flattening its center and forward portions. We agree.

art resolved. Against this background the obviousness or nonobviousness of the subject matter is determined. *Graham* v. *John Deere Co.*, supra at 17.

(1) *The Abbott water ski and Kelly surfboard.*—The Taiwan manufacturers argue that the Abbott water ski patent, U.S. patent No. 3,056,148, and the Kelly hydroplane surfboard patent, U.S. patent No. 3,111,695, are relevant prior art. The patents disclose, respectively, a water ski and a surfboard with an upturned aft plane.

[3] In a simple mechanical invention a broad spectrum of prior art must be explored and it is reasonable to permit inquiry into other areas where one of ordinary skill in the art would be aware that similar problems exist. *In re Heldt*, 58 CCPA 701, 433 F. 2d 808, 167 USPQ 676 (1970). Whether certain art is to be considered as prior art, we must consider the similarities and differences in structure and function of the inventions disclosed in the references. *In re Ellis*, 476 F. 2d 1370, 177 USPQ 526 (CCPA 1973). There is similarity in structure, with the water ski, the surfboard, and the kicktail deck all having an upturned aft plane. However, the problem of maneuvering a wheeled vehicle across a hard surface would appear to differ significantly from the problem of maneuvering a surfboard or water ski through water, a fluid medium. Therefore, we agree with the majority of the Commission that one of ordinary skill in the art of designing skateboards would not have turned to these patents for guidance on a problem of maneuverability of a wheeled vehicle.

(2) *The woodblock and heelplate skateboards.*—The Taiwan manufacturers also strongly argue anticipation of the subject claims by the Langton primitive woodblock skateboard and the Gottlieb heelplate skateboard. One witness, Mr. Langton, testified that he knew of a primitive woodblock skateboard prior to appellant's invention. This was a plank of wood with roller skates attached underneath, and a 2-by-4 shaved off at an angle attached across the rear of the plank. No physical exhibit was offered. Mr. Langton is president of a company which manufacturers kicktail skateboards. Another witness, Mr. Gottlieb, testified that he produced a "heelplate" skateboard prior to Stevenson's invention. This was a flat skateboard with a shoe heel attached to the upper surface of the board aft of the rear wheels. No physical exhibit was presented. Mr. Gottlieb also manufactures kicktail skateboards and at the time of his testimony was defending a patent infringement suit brought against Sears & Roebuck Co. by appellant on the same patent now under consideration. Neither witness could recall the position of the rear wheels relative to the aft end.

The evidence presented is insufficient to establish the existence of any anticipating devices. [4] Proof of such devices, alleged to be

complete anticipations of the subject patent, must be clear and convincing to overcome the presumption of validity.[4] Uncorroborated oral testimony of prior inventors or users with a demonstrated financial interest in the outcome of the litigation is insufficient to provide such proof. *The Barbed Wire Patent*, 143 U.S. 275, 284 (1892); *Jones Knitting Corp.* v. *Morgan*, 361 F. 2d 451, 149 USPQ 659 (3d Cir. 1966).

(3) *The rocker skateboard.*—A physical exhibit, RX–13, of a rocker skateboard has been admitted into the record. A rocker board differs from a flat skateboard in that the platform of the rocker board has an arcuate, continuously curved configuration with the leading and trailing edges each higher than the center portion of the platform. A rocker board is sometimes referred to as a spoon board or a Hobie board, after its designer, Hobie Alter. Considering the testimony of the witnesses as well as the admissions of Stevenson, who had manufactured rocker boards prior to his invention now under consideration, it is clearly established that rocker boards, exemplified by physical exhibit RX–13, are relevant prior art.

(4) *The flat skateboard.*—The flat skateboard, which has a flat platform, was acknowledged in the Stevenson patent specification as prior art.

Thus, on the record before us, the prior art includes, in addition to those patent references cited by the examiner in the examination of the Stevenson application, both flat skateboards and rocker skateboards.

The differences between the prior art represented by flat boards and rocker boards and the claims at issue are confined solely to the configuration of the platforms. The platform of the flat skateboard is flat. The platform of the rocker board is arcuate shaped, forming a continuous curve with the leading and trailing ends each higher than the central portion of the platform. The platform of the claimed board has a section that is flat, with an inclined foot-depressible lever coupled to the rearward end section, the lever being oriented so its plane slopes upwardly and rearwardly from the platform.[5]

---

[4] 35 U.S.C. 282, in effect at the time appellant filed his complaint, provides in part:

A patent shall be presumed valid. Each claim of a patent (whether in independent or dependent form) shall be presumed valid independently of the validity of other claims; dependent claims shall be presumed valid even though dependent upon an invalid claim. The burden of establishing invalidity of a patent or any claim thereof shall rest on the party asserting it.

[5] While claim 1 does not specifically limit the elongated platform to a flat shape, a review of the entire specification including the figures, and particularly claim 2 which refers to "an intersection angle defined by the planes of the platform and lever," we conclude that the elongated platform recited in claim 1 is planar. Note that we do not read the limitation of claim 2 into claim 1, but instead use the recitation in claim 2 which is a part of the entire specification as filed, as evidence to determine the definition of elongated platform in claim 1.

Claim 2 reads:

2. The structure according to claim 1, wherein an intersection angle defined by the planes of the plat form and lever is between 20 degrees and 50 degrees.

Obviousness

[5] In determining the presence or absence of obviousness, and in considering the facts of record before it, a court must remain aware that a patent shall be presumed valid and that the burden of persuasion is and always remains upon the party asserting invalidity, as required by 35 U.S.C. 282. See n. 4 supra. *Solder Removal Co.* v. *International Trade Commission*, 65 CCPA 120, 582 F. 2d 628, 199 USPO 129 (1978), and cases cited therein. The arguments before us and the Commission below focus on the prior art comprising the rocker board and the flat board.

The rocker board has been introduced into the record as a physical exhibit rather than in the form of a written description in a patent or otherwise. The physical exhibit of the rocker provides us with an example of an upswept trailing end, or tail, which is inclined at an angle to a horizontal surface. We must consider the evidence of record to determine what, if any, teachings were provided to one of ordinary skill in the art at the time of Stevenson's invention that would have made it obvious to substitute the flat platform of the flat skateboard for the arcuate platform of the rocker, or conversely to combine the upswept, inclined tail of the rocker with the flat skateboard.

(1) *Testimony of witnesses.*—The physical exhibit, RX-13, of a rocker skateboard was introduced by Mr. Gottlieb, a manufacturer of skateboards, who testified that the rocker board existed prior to Stevenson's invention of the kicktail skateboard. Mr. Gottlieb provided no testimony with regard to the actual teachings in[illegible]nt in the rocker board at the time of appellant's invention.

Appellee's witness Mr. Langton, the president of the National Skateboard Association, Inc., testified to his early experience with primitive wood plank skateboards in the 1950's. He indicated that he did not perform many maneuvers on such boards and could recall only "straight-ahead type of riding on an inclined hill or street." Mr. Langton did not become actively involved in skateboarding until 1976, so his testimony provides us with no understanding of the teachings of the rocker board concerning maneuverability at the time of appellant's invention.

Mr. Langton, an admittedly poor skateboard rider, found no difference in maneuverability between a rocker and a flat board. It was his opinion that the kicktail has achieved its commercial success for cosmetic reasons. The National Skateboard Association, Inc., has a manufacturing division that makes and sells skateboards of which 95 percent are kicktail skateboards.

Appellee's last witness was Mr. Criswell, who first began skateboarding in 1966 with a rocker board. He stopped for 19 months while in the military service, then began again at the end of 1969. However,

Mr. Criswell provided no testimony with regard to any advantages of maneuverability to be gained from the upswept tail of the rocker board during this period prior to appellant's invention. From his testimony, Mr. Criswell appears to be a very accomplished skateboarder who has participated competitively since 1975. He testified that a rocker board would have certain advantages over a flat board or a kicktail in bowl riding, which involves thrusting your weight up the side of a bank or bowl, turning at the top, then shooting down the bowl. However, he was in one bowl riding contest and used a kicktail skateboard. He has participated in free-style contests using a kicktail. Freestyle contests require each skateboarder to put together a performance routine requiring continuity of many tricks or maneuvers. He rides the same kicktail in downhill slalom races. He uses a kicktail "mostly just to know where [his] foot is, knowing where the back is. It's a feel." When he was asked why kicktails have captured so large a segment of the market, he suggested that it was "probably because everybody in California rides them," though he was not sure why. We observe that Mr. Criswell, who by his testimony has been clearly established to be a highly proficient skateboarder, contracts for the manufacture of and distributes skateboards, 100 percent of which are kicktails, and uses a kicktail board himself in his exhibitions and competitive events.

Appellant's witness, Mr. Radkey, is a research scientist for a firm engaged by appellant to conduct an analysis of mechanical advantages of the geometry of the kicktail deck over the flat and rocker decks. His conclusions drawn from this analysis generally support specific advantages for the kicktail deck. In cross examination, Mr. Radkey did surmise that a rocker board and a kicktail board of a given identical angle would perform identically in regard to certain elements of his static analysis of the board geometries. Mr. Radkey, however, did no physical testing of the skateboards and has never ridden a skateboard.

Appellant's witness, Mr. Graham, is president of the Pro-Am Skateboard Racing Association, and has worked actively organizing various skateboard competitions. He testified that the kicktail provides definite advantages in performing free-style maneuvers. At appellant's request, Mr. Graham conducted a survey of the 500 members of his association, with 45 percent responding to the survey requests. The survey comprised 19 questions. A substantial number of members had ridden the flat, the rocker, and the kicktail. The results of the survey indicated a decided preference for the kicktail.

This leaves the testimony of appellant, Mr. Stevenson, to consider. Appellant acknowledged the existence of the rocker prior to his invention. He testified that the purpose of the rocker design was to

simulate visually the look of a surfboard, with a visual function as opposed to the mechanical function of the kicktail.

Mr. Stevenson submitted a collection of five affidavits. The five affiants are all experienced skateboarders with competitive experience, some professional. The affiants all have ridden flats, rockers, and kicktails and all find the kicktail to be superior to the others. The affiants all agree that far greater maneuverability is possible with the kicktail. They all cite particular problems of imbalance associated with the rocker board.

(2) *Commercial success.*—The brief for the Taiwan manufacturers improperly asserts that commercial success can only tip the scales in favor of patentability in close cases. The cases cited by the Taiwan manufacturers, *Digitronics Corp.* v. *New York Racing Association, Inc.*, 553 F. 2d 740, 193 USPQ 577 (2d Cir. 1977), *International Telephone and Telegraph Corp.* v. *Raychem Corp.*, 538 F. 2d 453, 191 USPQ 1 (1st Cir. 1976), and cases cited therein, support their view that "[o]nly in a close case, in which application of the subjective criteria of nonobviousness in 35 U.S.C. 103 does not produce a firm conclusion, can these objective or secondary considerations be used to 'tip the scales in favor of patentability.' " *Digitronics*, supra at 748, 193 USPQ at 584. Contrary to the statement in *Digitronics*, we find nothing in *Sakraida* v. *Ag Pro, Inc.*, 425 U.S. 273, 189 USPQ 449 (1976) that "laid to rest" the view followed by this court and enunciated in *Graham* v. *John Deere Co.*, supra at 17, 36, 148 USPQ at 467, 474. [6] The inference of obviousness drawn from prior art disclosures is only prima facie justification for drawing the ultimate legal conclusion that the claimed invention is obvious under 35 U.S.C. 103. Therefore, it is necessary that such secondary consideraions also be evaluated in determining the final validity of that legal conclusion. As presented *John Deere*, such secondary considerations may serve to "guard against slipping into hindsight" and "to resist the temptation to read into the prior art the teachings of the invention in issue."

The ALJ found as fact, and it has been undisputed by either party, that presently kicktail skateboards constitute approximately 90 to 95 percent of production and sales in the skateboard industry. It is also clear from the record that the only difference between appellant's kicktail skateboard and the prior art flat skateboard is the provision by appellant of "an inclined foot-depressible lever coupled to the rearward end section of the platform." Appellant has submitted five affidavits of experienced competitive shateboarders to attest to the fact that the kicktail is superior and provides far greater maneuverability than the flat or rocker boards. The survey of the members of the Pro-Am Skateboard Racing Association supports these affidavits

by showing a decided perference for the kicktail because of its functional attributes. We also note that the majority opinion of Commissioners Moore and Bedell, as well as the ALJ, found the kicktail to possess functional advantages over the rocker. See n.3 supra. These factors establish prima facie a nexus between commercial success and the merit of appellant's invention, the provision of an inclined foot-depressible lever. *In re Felton*, 484 F. 2d 495, 179 USPQ 295 (CCPA 1973); *In re Caveney*, 55 CCPA 721, 386 F. 2d 917, 155 USPQ 681 (1967).

In rebuttal, to show that the commercial success is unrelated to the merits of the invention, appellees have presented one witness, Mr. Langton, who gave his opinion that the commercial success was due to cosmetic reasons. Appellees presented one other witness, Mr. Criswell, who was not sure why kicktails have captured so large a segment of the market. Mr. Criswell is a highly proficient skateboarder who uses the kicktail because it helps him to know where his foot is. We earlier noted that Mr. Criswell, like Mr. Langton, has a personal financial interest in kicktail skateboards.

[7] Thus, appellees have chosen to rebut appellant's prima facie nexus between commercial success and the merit of his invention with the opinion testimony of a single witness with a demonstrated financial interest in the outcome. As noted earlier, we must subject such testimony to close scrutiny. *The Barbed Wire Patent*, supra; *Jones Knitting Corp.* v. *Morgan*, supra.

We consider the testimony proffered by appellee to be insufficient to overcome the evidentiary value of that of appellants. The net result is a positive inference that the claimed skateboard would have been unobvious at the time the invention was made to one of ordinary skill in the art.

[8] After reviewing the evidence which has been summarized above, we find there is no evidence of record that would have suggested to one having ordinary skill in the art at the time of appellant's invention that the upswept tail of the rocker board would function to provide improved maneuverability. In fact, there is substantial evidence to the contrary that problems of imbalance result from the curved deck of the rocker. There is nothing in the testimony of appellee's witnesses to suggest that one having ordinary skill in the art would have found it obvious to modify either the flat or the rocker boards in such a manner as to result in the claimed kicktail skateboard. The evidence tends to support a finding that definite advantages in maneuverability adhere to the claimed skateboard configuration. To read into the upswept tail of the rocker board the teachings of appellant's kicktail is precisely the hindsight reasoning cautioned against in *Graham* v. *John Deere*, supra. Simplicity and hindsight are not proper

criteria for resolving the issue of obviousness. *In re Van Wanderham*, 54 CCPA 1487, 378 F. 2d 981, 154 USPQ 20 (1967).

Infringement

Claim 1 requires "an inclined foot-depressible lever coupled to the rearward end section of the platform." There are narrower claims in the patent than those we have considered in this action which restrict the construction of the lever to the tubular construction shown in the drawings and appellant's preferred embodiment. It is not necessary to describe in the specification all possible forms in which the claimed limitation may be reduced to practice. **[9]** Thus, we do not construe a broad claim to contain limitations expressed in the more narrow claims. *Smith* v. *Snow*, 294 U.S. 1, 24 USPQ 26 (1935). **[10]** In the instant case it is the provision by appellant of an inclined foot-depressible lever rather than the specific manner in which it is coupled to the skateboard platform which more accurately reflects appellant's invention. Therefore, we agree with the Commission that the term "coupled" is sufficiently broad to read on the one-piece molded skateboard platform of SX–5. See n. 2, stipulation 6 supra. We therefore need not consider application of the doctrine of equivalents.

Unenforceability

The Taiwan manufacturers assert that the Stevenson patent is unenforceable because during its prosecution before the Patent and Trademark Office (PTO), the patentee failed to disclose relevant prior art, i.e., the rocker board, to the examiner. Further, it is asserted that the patentee affirmatively misrepresented to the examiner the state of the art of skateboard construction in regard to (a) claiming adjustable wheels and (b) disclosing the means of attaching wheel assemblies to the skateboard platform. Therefore, they argue, the patent is unenforceable because it was obtained through inequitable conduct.

We turn to our opinion in *Norton* v. *Curtiss*, 57 CCPA 1384, 433 F. 2d 779, 167 USPQ 532 (1970), for guidance in evaluating these charges of misconduct.

The Stevenson patent was allowed on the first action by the PTO. Consequently, the file history provides no representations made by Stevenson to the PTO other than those representations contained in the original application. Stevenson did disclose the conventional flat skateboard in his specification. He did not disclose the rocker board to the PTO.

[11] Stevenson has testified that he knew of the rocker board, that they were very commonplace, and that he himself had built one for years. He did not disclose the rocker board to the PTO because "[t]hey did not work. It was so dramatically different that * * * [he] just

could not conceive * * * why there would be any need to try to draw any parallel or any connection there. They are different, they don't work the same; their effective use is different, the market." The evidence of record discussed above, including the consideration of commercial success, support these distinctions made by Mr. Stevenson. He clearly considered the conventional flat skateboard to be the most relevant prior art. Absent any evidence of bad faith on the part of Mr. Stevenson, we are precluded from any finding of fraud or inequitable conduct on his part by his failure to disclose the rocker board to the PTO. Id. at 1406, 433 F. 2d at 795, 167 USPQ at 545.

[12] We find no merit in appellee's assertions of misrepresentations by Stevenson in regard to (a) claiming adjustable wheels and (b) disclosing the means of attaching wheel assemblies to the skateboard. In dependent claim 11, Stevenson claims adjustable wheels in combination with his kicktail platform structure. It is inconceivable that this limitation in a dependent claim, standing alone, in any way represents that he has invented adjustable wheels. He is claiming his kicktail platform structure in combination with adjustable wheels. He has in no way relied on this combination for the patentability of the independent claim. Similarly, his disclosure that the wheel assemblies are secured to the platform "by wood screws or the like" in no way teaches away from the use of rivets and bolts or any other known fastening devices. Such assertions by appellees are unfounded and unsupported by any evidence. Bare assertions can not provide the clear and convincing evidence required to establish fraud or inequitable conduct. Id. at 1408, 433 F. 2d at 797, 167 USPQ at 547.

Conclusion

Accordingly, we conclude, from the evidence of record, that appellees have failed to carry their burden of persuasion in asserting the invalidity of the subject claims of the Stevenson patent.

We reverse the Commission's determination that there is no violation of section 337 because, from the evidence of record, we conclude that the subject matter as a whole of claims 1, 2, 7, and 8 of the Stevenson patent would not have been obvious to one of ordinary skill in the art of designing skateboards at the time the invention was made. We remand to the Commission for action consistent with this opinion.

Decisions of the United States Customs Court

United States Customs Court

One Federal Plaza
New York, N.Y. 10007

Chief Judge

Edward D. Re

Judges

Paul P. Rao
Morgan Ford
Scovel Richardson
Frederick Landis
James L. Watson
Herbert N. Maletz
Bernard Newman
Nils A. Boe

Senior Judge

Samuel M. Rosenstein

Clerk

Joseph E. Lombardi

Customs Decisions

(C.D. 4829)

JAMES A. ELKINS, JR., PLAINTIFF *v.* UNITED STATES, DEFENDANT

Coral and Jade Carvings

Court No. 75-12-03129

EXPERT TESTIMONY—ANTIQUES

The testimony of plaintiff's expert witness persuaded the court that the imported coral and jade carvings were made prior to 100 years before their date of entry and were therefore entitled to entry free of duty as antiques under item 766.25 of the TSUS.

[Judgment for plaintiff.]

(Decided December 13, 1979)

William Pannill for the plaintiff.

Alice Daniel, Assistant Attorney General; *Joseph I. Liebman,* Attorney in

Charge, Field Office for Customs Litigation, (*Susan C. Cassell* at the trial and on the brief), for the defendant.

WATSON, Judge: This action disputes the classification of three imported carvings, one from coral and two from jade. The coral carving, 5⅛ inches high, depicts a group of two ladies and a boy. One jade piece is a vase, 6¼ inches high, with carved flower decoration on the cover and body. The other jade piece, 8½ inches high, consists of four birds in an arboreal setting. The jade pieces originated from the People's Republic of China. All the items were imported from Singapore in 1974 and were classified under item 520.61[1] of the Tariff Schedules of the United States (TSUS) as other articles not specially provided for, of semiprecious stones. The coral piece was assessed with duty at the rate of 21 per centum ad valorem while the jade pieces bore the rate of 50 per centum ad valorem provided in column 2 of item 520.61.[2]

Plaintiff claims that these articles are entitled to entry free of duty as antiques made prior to 100 years before their date of entry under item 766.25 [3] or alternatively as original sculptures under item 765.15 [4] or original works of the free fine arts under item 765.25.[5]

Plaintiff's principal claim required it to prove that these articles were made prior to 100 years before their date of entry. This issue was tried by a straightforward confrontation of expert testimony which made the matter a classic example of the case decided on the trial judge's evaluation of the testimony given before him. In this regard the court was most favorably impressed with the authoritative testi-

---

[1] Schedule 5, part 1, subpart H:

Precious and semiprecious stones, cut but not set, and suitable for use in the manufacture of jewelry:

* * * * * * *

Other precious and semiprecious stones, and articles not specially provided for, of such stones:

* * * * * * *

520.61	Other	21% ad val. [and] 50% ad val.

[2] The col. 2 rates are applied in accordance with general headnote 3(e) of the TSUS, covering the products of certain Communist countries.

[3] Schedule 7, part 11, subpart B:

Ethnographic objects made in traditional aboriginal styles and made at least 50 years prior to their date of entry; and other antiques made prior to 100 years before their date of entry; all the foregoing articles, including such articles which have been repaired or renovated without changing their original form or character:

* * * * * * *

766.25	Other	Free

[4] Schedule 7, part 11, subpart A:

765.15	Original sculptures and statuary (including the first 10 castings, replicas, or reproductions made from a sculptor's original work or model with or without a change in scale and whether or not the sculptor is alive at the time the castings, replicas, or reproductions are completed), all the foregoing made in any form from any material as the professional productions of sculptors only, whether in round or in relief, and whether cut, carved, or otherwise wrought by hand or cast	Free

[5] Schedule 7, part 11, subpart A:

765.25	Original works of the free fine arts not provided for in the foregoing provisions of this part, in any media including, but not limited to, applied paper and other materials, manufactured or otherwise, such as are used on collages	Free

mony of plaintiff's witness, Mr. Fong Chow, associate curator of Far Eastern art at the Metropolitan Museum of Art in New York. Both his credentials and substantive analysis of the articles were superior to those of defendant's witness who was Mr. Lowell Collins, an art teacher, art gallery owner and art appraiser. Although Mr. Collins' opinions were not lightly regarded, his grounding in oriental art was less than satisfactory to the court and his overall analysis was not persuasive. Mr. Chow's opinions were based on his analysis of the style and workmanship of the pieces and were arrived at following comparison of them with pieces in books, auction catalogs, and in the extensive collection of the Metropolitan Museum of Art. He dated the coral carving as "mid-19th century," the jade bird carving as late 18th to early 19th century and the jade vase as early 19th century.

Mr. Collins claimed to have found modern tool marks on the right hand of one of the coral ladies, marks which Mr. Chow did not see and which the court could not discern. The court was persuaded that certain modern tool marks on the jade bird carving were attributable to restorers employed to grind down the sharp broken tail of one of the birds.

Despite these marks, Mr. Chow's characterization and analysis of the entire piece was distinctly more persuasive. Mr. Collins claimed to have found modern tool marks on the lid of the jade vase. Mr. Chow explained those marks as part of a triangular stylized thunder pattern and the court believed his explanation.

For the above reasons, plaintiff proved by a preponderance of the evidence that these articles were made prior to 100 years before their date of entry. It is therefore unnecessary to reach its alternate claims, and judgment will enter accordingly.

(C.D. 4830)

CERTIFIED BLOOD DONOR SERVICES, INC., PLAINTIFF
v. UNITED STATES, DEFENDANT

Diagnostic Serum

Court No. 69/29877

STARE DECISIS

Imported serum used for diagnosis of blood disorders is properly classifiable as an "analogous biological product" under item 437.76 of the TSUS in accordance with the holding as to the same merchandise in *Certified Blood Donor Services, Inc.* v. *United States*, 62 CCPA66, C.A.D. 1147, 511 F. 2d 572 (1975). Additional proof offered by de-

fendant regarding whether or not the importations are subject to the licensing requirements of the Public Health Service does not bear on the meaning of the statutory term as interpreted by the CCPA and the normal rule of *stare decisis* should apply.

[Cross-motions for summary judgment; plaintiff's motion granted.]

(Decided December 14, 1979)

Sharretts, Paley, Carter & Blauvelt, P.C. (*Peter Jay Baskin* on the briefs) for the plaintiff.

Alice Daniel, Assistant Attorney General; *Joseph I. Liebman,* Attorney in Charge, Field Office for Customs Litigation (*Madeline B. Cohen* on the brief), for the defendant.

Opinion and Order

Watson, Judge: These are cross-motions for summary judgment in a dispute regarding the classification of imported serum used for the diagnosis of human blood disorders. The imported merchandise is the same in all material respects as the merchandise involved in *Certified Blood Donor Services, Inc.* v. *United States*, 62 CCPA 66, C.A.D. 1147, 511 F. 2d 572 (1975). It was classified under the ultimate residual provision of item 799.00[1] of the Tariff Schedules of the United States (TSUS).

In the previous action the principal question was the correctness of plaintiff's claim that item 437.76[2] of the TSUS, providing *inter alia* for "analogous biological products," described serums used for *diagnostic* purposes. The Court of Customs and Patent Appeals decided that it did. The issue was decided by reference to the "Tariff Classification Study Explanatory and Background Materials," November 15, 1960, schedule 4, part 3, page 86. The CCPA stated as follows:

> * * * That passage clearly demonstrates that the scope of item 437.76 was intended to "substantially correspond with the scope of the licensing requirements of the Public Health Service * * * applicable to the importation of certain biological products." [62 CCPA at 70.]

The CCPA went on to state as follows:

> These Public Health Service regulations broadly define the phase "applicable to the prevention, treatment or cure of diseases or injuries of man" as "including also any other use for purposes of diagnosis if the diagnostic substance so used is prepared from or with the aid of a biologic product." * * * [*Id.* at 71.]

---

[1] Schedule 7, part 14—Nonenumerated products:
Any article, not provided for elswhere in these schedules:

	• • • • • • •	
799.00	Other	9% ad val.

[2] Schedule 4, part 3—Drugs and related products; subpart B:

437.76	Viruses, therapeutic serums, vaccines, toxins, antitoxins, and analogous biological products * * *	Free.

The term "biological product" was defined in 42 CFR 73.1 (1960) to include serums used for purposes of diagnosis. This led the CCPA to conclude that the proper classification of the imported merchandise was in item 437.76 of the TSUS as analogous biological products.

Plaintiff's motion for summary judgment is clearly meritorious and it remains only to comment on defendant's cross-motion and on its argument against the normal application of the rule of *stare decisis*.

In its opposition and cross-motion, the Government has concentrated its attention on proving that these importations did not have, and were not required to have, licenses under the Public Health Services Act. The Government argues that no *stare decisis* effect should be given to the CCPA decision because it erred as follows:

> There was no finding by the court that either the merchandise itself was licensed or that the manufacturer's establishment was licensed. Therefore, the court could not find that the merchandise or manufacturing establishment substantially corresponded with the scope of the licensing requirements of the Public Health Service as mandated by the legislative history.

It is the opinion of this court that *stare decisis* should be given full force and effect and the licensing considerations raised by the defendant are irrelevant to the classification of the merchandise. The classification of these importations is to be arrived at by the interpretation of the language of the TSUS and not by considerations of whether the importations do or do not require licenses pursuant to other legislation or regulations. The purpose of resorting to the Public Health Service regulation was as an aid in defining the statutory term "analogous biological products" and the clear meaning of the CCPA opinion is that it was arriving at a definition of the term "analogous biological product." That definition includes products used for diagnosis because the legislative history shows that the term was intended to be understood in conformity with the meaning of the term "biological products" in the licensing requirements of the Public Health Service. The TSUS language was not intended to be limited in its application to articles which require licenses.

Admittedly, the trial court and the CCPA did give some attention to a stipulation between the parties regarding the license status of the importations but the significance of that attention is not apparent. It suffices to say that the opinion of the CCPA does not indicate that the existence or nonexistence of a license for a particular importation enters into the determination of whether it is an "analogous biological product" within the meaning of item 437.76 of the TSUS.

In the opinion of this court once the TSUS term has been defined through whatever means and with whatever aids, the effect of the interpretive aids such as the licensing provisions of the Public Health

Service regulations does not extend to further modify the application of the statutory term under the TSUS.

For the above reasons it is

ORDERED, ADJUDGED, AND DECREED, that plaintiff's motion for summary judgment be, and the same hereby is, granted; and it is further

ORDERED, ADJUDGED AND DECREED, that the diagnostic serum covered by the above-captioned action is properly classifiable as an analogous biological product under item 437.76, TSUS, free of duty; and it is further

ORDERED, ADJUDGED AND DECREED, that the Regional Commissioner of Customs at the Port of New York shall reliquidate the entry accordingly; and it is further

ORDERED, ADJUDGED AND DECREED, that defendant's cross-motion for summary judgment be, and the same hereby is, denied.

(C.D. 4831)

THE KINNEY CO., PLAINTIFF *v.* UNITED STATES, DEFENDANT

Metal flats

Court No. 77-4-00573

UNFINISHED PARTS

Unfinished metal flats were properly classified as parts of jewelry. The fact that they were subjected to processing after importation did not mean that they were not already parts as imported. Since the processing brought already advanced importations to the same final state of readiness without distinguishing between them, proof that final articles were chiefly used as parts of jewelry was equivalent to proof that the importations were so used. General interpretative rule 10(h) employed.

[Cross-motions for summary judgment; defendant's motion granted.]

(Decided December 14, 1979)

Doherty and Melahn (*Robert Emmett Mullin, Jr.*, on the briefs) for the plaintiff.
Alice Daniel, Assistant Attorney General; *Joseph I. Liebman*, Attorney in Charge, Field Office for Customs Litigation (*Susan C. Cassell* on the briefs), for the defendant.

OPINION AND ORDER

WATSON, Judge: This dispute is before the court on cross-motions for summary judgment. The merchandise in question consists of two types of flat metal pieces with enamel decoration, referred to as

"flats." One is called the "Key-Shaped Mittersill" and the other is called the "Liberty Bell." The Mittersill flat is roughly in the shape of a key blank 1¼ inches in length and one-half inch in width. It has on its face the name of the purchaser in script, a resort known as Mittersill, and the emblem of the resort, both on a white enamel background. The Liberty Bell flat is in the familiar shape of the Liberty Bell and is decorated in the colors of red, white, and blue. It measures three-quarters of an inch in length and slightly less than three-quarters of an inch in width.

The merchandise was imported from Taiwan and entered by mail at the port of Providence, R.I. It was classified under item 740.38[1] of the Tariff Schedules of the United States (TSUS) as parts of jewelry and assessed with duty at the rate of 27.5 per centum ad valorem. It is claimed that the merchandise is properly classifiable under item 657.30[2] of the TSUS as articles of copper, not coated or plated with precious metal, and dutiable at the rate of 0.6 cent per pound plus 11 per centum ad valorem

The essential facts of the case are not in dispute although they have been the subject of some caviling between the parties. After removing the cavils and deleting those matters which are more in the nature of legal conclusions, the material facts in the case, based on the court's understanding of the record herein, are as follows:

1. The merchandise at issue in its condition as imported consists of metal flats with enamel decoration.

2. The merchandise is not used in its imported condition.

3. After importation and prior to sale the merchandise is subjected to additional processing.

4. After processing the merchandise is used for jewelry and nonjewelry uses.

Plaintiff relies on its presentation of representative samples of the importations and the affidavit of plaintff's president to establish that the merchandise in question is not a part and is in chief value of copper. Plaintiff argues that in its condition as imported the merchandise is insufficiently advanced to be a part of jewelry and has equal potential to be used in both jewelry and nonjewelry items.

---

[1] Schedule 7, part 6, subpart A:

Jewelry and other objects of personal adornment not provided for in the foregoing provisions of this part (except articles excluded by headnote 3 of this part), and parts thereof:

* * * * * * *

Valued over 20 cents per dozen pieces or parts:

* * * * * *

740.38 Other ..... 27.5% ad val.

[2] Plaintiff also made claims under items 654.05 and 657.35 but only the 657.30 claim was argued.

Schedule 6, part 3, subpart G:

Articles of copper, not coated or plated with precious metal:

657.30 Of copper, other than alloys of copper; of nickle silver or of cupro-nickel.. 0.6¢ per lb.+ 11% ad val.

Defendant relies on the presumptive correctness of its classification and on plaintiff's response to interrogatory No. 12(b) that "after manufacture, the chief use of the Mittersill flat and similar merchandise is as jewlery."

Plaintiff's argument that the importations are not sufficiently advanced to be parts is ingenuous. They are clearly much too developed in form and in detail and too close to the final product to be considered mere material. While it is true that in their condition as imported they have the potential to be ultimately used for a variety of jewelry and nonjewelry uses, this "potential" is not reduced by their further advancement. When they are finally finished they have the same potential for alternative uses, and it is only the final act of attachment to specific items which "seals" their use. In other words, it might be an argument against determining the chief use in their unfinished state if further processing would create distinctions between those which would become parts of one type and those which would become parts of another type. See, for example, the treatment of amberoid shapes in *United States* v. *National Importing Co. (Inc.) et al.*, 12 Ct. Cust. Appls. 186, T.D. 40169 (1924). Here the further processing does not develop any distinction between the unfinished objects but simply brings them all into the same undifferentiated state of readiness for use. Therefore, the processing or advancement, being the same for all the objects, can be eliminated from the "equation" and it can be reasoned that the chief use of the unfinished object is the same as that of the finished object.

The implications of plaintiff's argument that these objects have no use at all in their imported condition would disrupt a basic statutory arrangement. If that reasoning were followed, no unfinished article could be classified in the provision for the finished article since it could always be argued that articles have no use in their unfinished state. Yet it is clear from general interpretative rule 10(h)[3] that the tariff schedules contemplate that articles whose finished form can be definitely dicerned are described by the provision for the finished article even if they are unfinished.

Plaintiff makes a related argument that what was done here violated the principle that articles are to be classified in accordance with their condition as imported in that the chief use attributed to them does not become manifest until they are in finished form. However, this is based either on the assertion that the importations have no use in

---

[3] TSUS general headnotes and rules of interpretation:

10. *General interpretative rules.*—For the purposes of these schedules—

* * * * * * *

(h) unless the context requires otherwise, a tariff description for an article covers such article, whether assembled or not assembled, and whether finished or not finished;

their imported condition, which is a groundless fiction, or on the assumption that they have a multiplicity of potential uses which are not determinable except as processing directs them one way or the other. As discussed earlier, plaintiff has not proved that the processing does anything to differentiate between these importations and therefore it is reasonable and correct to consider that their uses do not vary according to their condition. Consequently, they were classified in accordance with their condition as imported at which time the chief use could logically be ascertained.

For the same reason, although technically the answer to defendant's interrogatory 12(b) spoke of chief use after "manufacture," because the processing of the importations finished them in a uniform manner without developing use differentiations between them, it is logical to reason from the answer that absent intervening changes the chief use of the importations after "manufacture" must be the chief use at the time of importation. Accordingly, the answer is either an admission or proof by logical extension of the fact that the importations are chiefly used in jewelry. The defendant's cross-motion for summary judgment must therefore be granted, and it is hereby

ORDERED, ADJUDGED AND DECREED, that plaintiff's motion for summary judgment be, and the same hereby is, denied in all respects; and it is further

ORDERED, ADJUDGED AND DECREED, that defendant's cross-motion for summary judgment be, and the same hereby is, granted in all respects; and it is further

ORDERED, ADJUDGED AND DECREED, that judgment be, and hereby is, entered affirming the Customs classification of the imported merchandise under item 740.38, TSUS, and the assessment of duty thereunder at the rate of 27.5 per centum ad valorem. The action is accordingly dismissed.

Decisions of the United States Customs Court

Customs Rules Decision

(C.R.D. 79–17)

BENITO FERNANDEZ PANTOJA, AS FORMER DIRECTOR AND PRESIDENT OF MONTEZUMA OF FLORIDA, INC., A DISSOLVED FLORIDA CORPORATION, PLAINTIFF *v.* UNITED STATES, DEFENDANT

Court No. 79–5–00747

[Motion to dismiss denied.]

(Dated December 11, 1979)

Morales, Rudolph & Hevia (*Jorge Hevia, Jr.* on the brief) for the plaintiff.
Alice Daniel, Assistant Attorney General; *Joseph I. Liebman,* Attorney in Charge, Field Office for Customs Litigation (*Jerry P. Wiskin* on the brief), for the defendant.

Opinion and Order

FORD, Judge: Defendant, pursuant to rules 4.7 and 4.12 of the rules of this court has filed a motion to dismiss the above-entitled action on the ground that the court lacks jurisdiction.

Plaintiff opposes defendant's motion on the ground that it filed a protest on February 8, 1977. The alleged protest filed on said date is a "Discrepancy Report and Declaration" required by 19 CFR 18.6(c). Defendant denies the discrepancy report and declaration constitutes a protest within the meaning of section 514 of the Tariff Act of 1930 and Customs Regulations, 19 CFR 174.13. In any event, defendant brought to the attention of the court that the entry was liquidated on November 11, 1977, and consequently the alleged protest filed on February 8, 1977, is premature.

The court in reviewing the papers in this matter observed a photocopy of a letter dated October 30, 1978, from the district director of Customs at Miami, Fla., to counsel for plaintiff which reads as follows:

DEPARTMENT OF THE TREASURY,
U.S. CUSTOMS SERVICE,
Miami, Fla., October 30, 1978.

JORGE HEVIA, JR., Attorney,
Miami, Fla.

DEAR MR. Hevia: Reference is made to your letter of January 20, 1978, requesting a refund of duties and internal revenue tax for 673 cartons of sparkling wine, that were found to be short in container No. 399368.

This office has reviewed the file of this importation and the circumstances revolving around the shortage of the wine. The ocean bill of lading indicates that there were 1,100 cartons in the container with corresponding weights. The container was delivered to Moctezuma of Florida, Inc., on January 21, 1977. On January 24, 1977, the seal was broken by Customs and at that time the shortage was discovered.

In the absence of evidence that the merchandise was not shipped by the shipper or not landed, Customs must assume that the total amount of 1,100 cartons were landed in the United States. In accordance with section 141.1 of 19 CFR, chapter 1, the importer of record is liable for all duty and taxes of imported merchandise. An allowance for deficiencies in contents of packages may be allowed under section 158.5 of 19 CFR, chapter 1, if the district director is satisfied of the validity of the importers claim of shortage. In the instant case, no proof has been submitted that 673 cartons of sparkling wine were not shipped or landed in the United States, and as stated previously, section 141.1 of 19 CFR, chapter 1, would apply.

In view of the above, this office has no alternative but to deny your claim for refund of duties.

Sincerely yours,

DOUGLAS D. ANGLE,
District Director.

The reference to letter of counsel for plaintiff of January 20, 1978; prompted the court on November 8, 1979, to order the district director to forward to the court the letter or a photocopy of the letter of January 20, 1978, showing date of receipt. On December 2, 1979, a copy of a copy of the letter was received together with a letter of transmittal indicating the original letter could not be located and that the records of the district director do not indicate date of receipt. A copy of the letter received reads as follows:

A. KOSS, ATTORNEY AT LAW, P.A.,
Coral Gables, Fla., January 20, 1978.

Re CE726026 dated January 14, 1977, imported by Moctezuma of Florida, Inc.

RICHARD T. MESSICK,
Senior Import Specialist, Department of the Treasury, U.S. Customs Service, Miami, Fla.

DEAR MR. MESSICK: As you might be aware, this office repre-

sents Benito Fernandez Pantoja and his firm, Moctezuma de Florida, Inc.

We are somewhat surprised with your letter of November 29, 1977, copy attached. It is true that the importer is responsible for the duties and taxes. However, it cannot be assumed in this case that the 1,100 cases of sparkling wine (see photo attached) arrived since inspector E. K. Rawls noted, as you will appreciate that there were "427 cases only in container 399368."

Inspector Rawls made the statement after he personally opened the sealed containers.

Therefore, we respectfully request again a refund in the amount of $7,074.36 for the 673 cartons missing. We are sure there is some misunderstanding here since the fisc is only interested in collecting its share of the duties.

We shall add again, as Customs has been advised, that the carrier has been unwilling to cooperate.

Very truly yours,

The question thus presented to the court is whether the letter constitutes a protest and whether it was timely filed.

Jurisdiction of this court is set forth in 28 U.S.C. 1582(a) which provides so far as is pertinent herein that this court "shall have exclusive jurisdiction of civil action instituted by any person whose protest pursuant to the Tariff Act of 1930, as amended, has been denied, in whole or in part, by the appropriate Customs officer. * * *"

Section 514(a)(3) provides that decisions of the appropriate Customs officer including the legality of all orders and finding with respect to "all charges or exactions of whatever character within the jurisdiction of the Secretary of the Treasury" are final and conclusive unless a protest is filed or a civil action is instituted pursuant to 28 U.S.C. 2632 within 180 days, 28 U.S.C. 2631, of the denial of a protest. Section 514(2), Tariff Act of 1930, requires the filing of a protest within 90 days from the date of liquidation.

The entry was liquidated on November 11, 1977, and the letter of counsel for plaintiff is dated January 20, 1978.

The court is aware of the fact that the letter of counsel for plaintiff was addressed to a senior import specialist rather than the district director. However, the court notes the reply was from the district director in which the facts of the importation and the claim were acknowledged.

It has long been a cardinal rule in construing a protest that it need not be made with technical precision as long as the importer indicates distinctly and definitely the source of the complaint and his intention to make it the basis of his claim against the government. *Greeley's Administrator* v. *Burgess* (*Converse* v. *Burgess*), 59 U.S. 413.

In *Arthur* v. *Morgan*, 112 U.S. 495, the Supreme Court made the following observation:

> * * * A protest which indicates to an intelligent man the ground of the importer's objection to the duty levied upon the articles should not be discarded because of the brevity with which the objection is stated. [*Schell's Executors* v. *Fauché*, 138 U.S. 562.]

In addition to the foregoing, in instances such as in the case at bar, where the claim is obvious, a failure to state specific provisions of law is not fatal to the sufficiency of a protest. *How-Tex Peanut Company, Inc.* v. *United States*, 54 Cust. Ct. 316, Abs. 69066 (1965). In the case of *United States* v. *Eaton Mfg. Co.*, 60 CCPA 23 (1972), the court stated: "The denial of jurisdiction for insufficiency of protest is a severe action which should be taken sparingly." The construction above is indicative of the fact that the protest is sufficient notice to the district director of the intended claim.

It is also apparent that the claim for refund of duty and internal revenue tax is within the jurisdiction of the Secretary of Treasury.

The question as to whether the letter was timely received, since the office of the district director is unable to locate the original letter and cannot by records attest to the date of receipt is next considered. The letter dated January 20, 1978, was answered on October 30, 1978, and was accordingly received. The office of counsel for plaintiff is in Coral Gables, Fla., and the district director is in Miami, Fla., a distance of under 10 miles, according to the Rand McNally map contained in the "Standard Highway Guide." With all due respect to the efficiency of the Postal Service, occasions do arise when properly addressed mail is delayed or diverted from its appointed course. However, there is a strong presumption that letters entrusted to the mails reach their destination in the ordinary course of time. *Dunlop* v. *United States*, 165 U.S. 486. Even considering the delays in the mails, it can be presumed that delivery was accomplished within 19 days or prior to February 8, 1978, which is 90 days from the date of liquidation.

A further examination of the papers also indicates that a summons instituting the action in this court was timely filed.

The court having jurisdiction in this matter therefore denies defendant's motion to dismiss for lack of jurisdiction. This action should be noticed for trial for determination on the merits.

Decisions of the United States Customs Court

Abstracts

Abstracted Protest Decisions

DEPARTMENT OF THE TREASURY, *December 17, 1979.*

The following abstracts of decisions of the United States Customs Court at New York are published for the information and guidance of officers of the customs and others concerned. Although the decisions are not of sufficient general interest to print in full, the summary herein given will be of assistance to customs officials in easily locating cases and tracing important facts.

ROBERT E. CHASEN,
Commissioner of Customs.

DECISION NUMBER	JUDGE & DATE OF DECISION	PLAINTIFF	COURT NO.	ASSESSED	HELD	BASIS	PORT OF ENTRY AND MERCHANDISE
				Par. or Item No. and Rate	Par. or Item No. and Rate		
P79/223	Boe, J. December 12, 1979	Hugo Stinnes Steel & Metals Co.	74-4-01101	Item 948.00 10% supplemental duty	Exempt from supplemental duty	Hugo Stinnes Steel and Metals Co. v. U.S. (C.D. 4753, aff'd C.A.D. 1226)	Detroit Articles of steel
P79/224	Boe, J. December 12, 1979	Hugo Stinnes Steel & Metals Co.	74-4-01103	Item 948.00 10% supplemental duty	Exempt from supplemental duty	Hugo Stinnes Steel and Metals Co. v. U.S. (C.D. 4753, aff'd C.A.D. 1226)	Chicago Articles of steel

Decisions of the United States Customs Court

Abstracts

Abstracted Reappraisement Decision

DECISION NUMBER	JUDGE & DATE OF DECISION	PLAINTIFF	COURT NO.	BASIS OF VALUATION	HELD VALUE	BASIS	PORT OF ENTRY AND MERCHANDISE
R79/258	Re, C. J. December 12, 1979	Rosewood Fabrics, Inc.	78-7-01292	Export value	Invoice unit values	Agreed statement of facts	New York Polyester knit fabrics
R79/259	Re, C. J. December 12, 1979	YKK Zipper YKK Zipper (USA), Inc.	74-10-02741	Constructed value	Equal to invoiced unit prices plus 8.5%, net, packed	Agreed statement of facts	San Francisco-Oakland (San Francisco) Zippers and/or zipper parts, classified under item 745.70, 745.72 or 745.74
R79/260	Re, C. J. December 12, 1979	YKK Zipper Co. et al.	73-9-02661, etc.	Constructed value	Equal to invoiced unit prices plus 8.5%, net, packed	Agreed statement of facts	Los Angeles Zippers and/or zipper parts, classified under item 745.70, 745.72 or 745.74
R79/261	Re, C. J. December 12, 1979	YKK Zipper, Inc.	72-8-01841	Constructed value	Equal to invoiced unit prices plus 8.5%, net, packed	Agreed statement of facts	Chicago Zippers and/or zipper parts, classified under item 745.70, 745.72 or 745.74

DECISION NUMBER	JUDGE & DATE OF DECISION	PLAINTIFF	COURT NO.	BASIS OF VALUATION	UNIT OF VALUE	BASIS	PORT OF ENTRY AND MERCHANDISE
R79/262	Re, C. J. December 12, 1979	YKK Zipper (Ill), Inc.	78-8-01877	Constructed value	Equal to invoiced unit prices plus 8.5%, net, packed	Agreed statement of facts	Chicago Zippers and/or zipper parts, classified under item 745.70, 745.72 or 745.74
R79/263	Re, C. J. December 12, 1979	YKK Zipper (Mo), Inc. YKK Zipper Co.	75-1-00194, etc.	Constructed value (if exported from Japan prior to 2/1/72) United States value (if exported on or after 2/1/72)	Equal to invoiced unit prices plus 8.5%, net, packed Equal to invoiced unit prices, net, packed	Agreed statement of facts	Chicago Zippers and/or zipper parts, classified under item 745.70, 745.72 or 745.74

Judgment of the U.S. Customs Court in Appealed Case

DECEMBER 14, 1979

APPEAL 79-3.—Hambro Automotive Corporation *v.* United States—ERRORS IN APPRAISED VALUE OF AUTOMOBILES—MOTION TO DISMISS—LACK OF JURISDICTION.—C.D. 4761 affirmed August 23, 1979 (C.A.D. 1231).

International Trade Commission Notices

Investigations by the U.S. International Trade Commission

DEPARTMENT OF THE TREASURY

The appended notices relating to investigations by the U.S. International Trade Commission are published for the information of Customs officers and others concerned.

R. E. CHASEN,
Commissioner of Customs.

In the Matter of CERTAIN FOOD SLICERS AND COMPONENTS THEREOF	Investigation No. 337-TA-76

Notice of Investigation

Notice is hereby given that a complaint was filed with the U.S. International Trade Commission on November 5, 1979, amended on November 26, 1979, and further amended November 30, 1979, under section 337 of the Tariff Act of 1930 (19 U.S.C. 1337), on behalf of Prodyne Enterprises, Inc., P.O. Box 212, Montclair, Calif. 91763, alleging that unfair methods of competition and unfair acts exist in the importation into the United States of certain food slicers, or in their sale, because such food slicers are allegedly covered by claim 7 of U.S. Letters Patent 3,766,817. As amended, the complaint alleges that the effect or tendency of the unfair methods of competition and unfair acts is to destroy or substantially injure an industry, efficiently and economically operated, in the United States.

Complainant requests that the Commission order temporary exclusion from entry into the United States of the imports in question during the pendency of the investigation, and permanent exclusion after a full investigation has been conducted.

Having considered the complaint, the Commission on December 4, 1979, ORDERED THAT—

(1) Pursuant to subsection (b) of section 337 of the Tariff Act of 1930 (19 U.S.C. 1337), an investigation be instituted to determine whether there is reason to believe there is a violation and whether there is a violation of subsection (a) of this section in the unlawful importation of certain food slicers and components thereof into the United States, or in their sale, because of the alleged infringement by such food slicers of claim 7 of U.S. Letters Patent No. 3,766,817, the effect or tendency of which is to destroy or injure substantially an industry, efficiently and economically operated, in the United States.

(2) For the purpose of this investigation so instituted, the following are hereby named as parties upon which this notice of investigation shall be served:

(a) The complainant is—
Prodyne Enterprises, Inc.
P.O. Box 212
Montclair, Calif. 91763

(b) The respondents are the following companies alleged to be engaged in the unauthorized importation of certain food slicers and components thereof into the United States, or in their sale, and are parties upon whom the complaint is to be served:

E. Mishan & Sons
1170 Broadway
New York, N.Y. 10001

Crest Industries, Corp.
593 Acorn Street
Deer Park, N.Y. 11729

Albert E. Price, Inc.
Interstate Industrial Park
Bellmawr, N.J. 08031

Taiwan Timing Trading Co.
Taichung, Taiwan

(c) JoAnn Miles, U.S. International Trade Commission, 701 E Street NW., Washington, D.C. 20436, is hereby named Commission investigative attorney, a party to this investigation; and

(3) For the investigation so instituted, Chief Administrative Law Judge Donald K. Duvall, U.S. International Trade Commission, 701 E Street NW., Washington, D.C. 20436, shall designate the presiding officer.

Responses must be submitted by the named respondents in accordance with section 210.21 of the Commission's Rules of Practice and Procedure (19 CFR 210.21). Pursuant to section 201.16(d) and 210.21(a) of the rules, such responses will be considered by the Commission if received not later than 20 days after the date of service of the complaint. Extensions of time for submitting a response will not be granted unless good and sufficient cause therefor is shown.

Failure of a respondent to file a timely response to each allegation in the complaint and in this notice may be deemed to constitute a waiver of the right to appear and contest the allegations of the complaint and

this notice, and to authorize the presiding officer and the Commission, without further notice to the respondent, to find the facts to be as alleged in the complaint and this notice and to enter both a recommended determination and a final determination containing such findings.

The complaint is available for inspection by interested persons at the Office of the Secretary, U.S. International Trade Commission, 701 E Street NW., Washington, D.C. 20436, and in the Commission's New York office, 6 World Trade Center, New York, N.Y. 10048.

By order of the Commission.

Issued: December 13, 1979.

KENNETH R. MASON,
Secretary.

In the Matter of CERTAIN AUTOMATIC CRANKPIN GRINDERS	Investigation No. 337-TA-60

Commission Determination and Order

INTRODUCTION

The U.S. International Trade Commission conducted investigation No. 337-TA-60 pursuant to section 337 of the Tariff Act of 1930, as amended (19 U.S.C. 1337), of alleged unfair methods of competition and unfair acts in the unauthorized importation and sale of certain automatic crankpin grinders. On December 4, 1979, the Commission unanimously determined that there was a violation of the statute in the importation or sale of certain automatic crankpin grinders which infringe claims 8, 16, and 19 of U.S. Letters Patent No. 3,118,258. The Commission determined, however, that the public interest factors enumerated in subsections (d) and (f) of the statute preclude the imposition of a remedy.

DETERMINATION

Having reviewed the record in this matter, the Commission has determined—

1. That there is a violation of section 337 of the Tariff Act of 1930, as amended, in the importation and sale of certain automatic crankpin grinders which infringe claims 8, 16, and 19 of U.S. Letters Patent No. 3,118,258, the effect or tendency of which is to destroy or substantially injure an industry, efficiently and economically operated, in the United States.

2. That the effect of a remedy upon the public health and welfare, competitive conditions in the U.S. economy, the production of like

or directly competitive articles in the United States, and U.S. consumers precludes the issuance of an exclusion order or a cease and desist order pursuant to subsection (d) or (f) of section 337 of the Tariff Act of 1930, as amended.[1]

ORDER

Accordingly, it is hereby ordered that—

1. Investigation No. 337-TA-60 is terminated by the issuance and publication of the Commission determination and order in the Federal Register and by the issuance of this Commission determination, order, and opinions; and

2. This order shall be sreved upon each party of record in this investigation and upon the U.S. Department of Health, Education, and Welfare, the U.S. Department of Justice, and the Federal Trade Commission.

By order of the Commission.

Issued: December 17, 1979.

KENNETH R. MASON,
Secretary.

In the Matter of CERTAIN LARGE VIDEO MATRIX DISPLAY SYSTEMS AND COMPONENTS THEREOF	Investigation No. 337-TA-75

Notice of Investigation

Notice is hereby given that a complaint was filed with the U.S. International Trade Commission on October 25, 1979, under section 337 of the Tariff Act of 1930, as amended (19 U.S.C. 1337), on behalf of Stewart-Warner Corp., 1926 West Diversey Parkway, Chicago, Ill. 60614, alleging that unfair methods of competition and unfair acts exist in the importation of certain large video matrix display systems or components thereof into the United States, or in their sale, because such large video matrix display systems are: (a) Allegedly covered by the claims of U.S. Letters Patent Nos. 3,495,762, 3,941,926, 4,009,335,

[1] Chairman Parker determines that the appropriate relief in this case, in the light of the public interest and the remedial nature of sec. 337, is the issuance of an exclusion order preventing the importation of infringing articles during the life of the patent except (1) under license or (2) in the absence of the complainant granting a license when payment in the amount equal to but not to exceed the maximum license fee previously established by the patent owner Landis in arm's length agreement between the patent owner and any of its licensees is tendered by the importer to the patent owner. In the absence of the previous disclosure and establishment of such an amount, the amount that would be required to be tendered would be $2,500 per imported article.

Commissioner Moore determines that the issuance of an exclusion order pursuant to subsection (d) of sec. 337 of the Tariff Act of 1930, as amended, preventing importation of infringing articles during the life of the patent except under license is the appropriate means to remedy the violation of sec. 337.

and 4,148,073; and (b) sold on such terms and conditions as to represent no reasonable expectation of a profit or to break even and which are predatory in nature.

The complaint alleges that the effect or tendency of the unfair methods of competition and unfair acts is to destroy or substantially injure an industry, efficiently and economically operated, in the United States.

Complainant requests a temporary order of exclusion from entry into the United States of the imports in question. Complainant further requests that, after a full investigation, a permanent exclusion of said imports be ordered and a cease and desist order be issued.

Having considered the complaint, the Commission, on November 20, 1979, ORDERED THAT—

(1) Pursuant to subsection (b) of section 337 of the Tariff Act of 1930, as amended (19 U.S.C. 1337), an investigation be instituted to determine only whether there is, or there is reason to believe there is, a violation of subsection (a) of this section in the unlawful importation of certain large video matrix display systems or components thereof into the United States, or in their sale, because such large video matrix display systems are allegedly covered by the claims of U.S. Letters Patent Nos. 3,495,762, 3,941,926, 4,009,335, and 4,148,073, the effect or tendency of which is to destroy or substantially injure an industry, efficiently and economically operated, in the United States;

(2) For the purpose of this investigation so instituted, the following are hereby named as parties upon which this notice of investigation shall be served:

(a) The complainant is—

Stewart-Warner Corp.
1826 West Diversey Parkway
Chicago, Ill. 60614

(b) The respondents are the following parties upon which the complaint is to be served:

SSIH Equipment S.A.
a member of the Omega Electronics Group
Rue Stampfli
CH-2503 Bienne, Switzerland

The Milwaukee Brewers Baseball Club, Inc.
Milwaukee County Stadium
201 South 46th Street
Milwaukee, Wis. 53214;

(c) Donald R. Dinan, U.S. International Trade Commission, 701 E Street NW., Washington, D.C. 20436, is hereby named Commission investigative attorney, a party to this investigation; and

(3) For the investigation so instituted, Chief Administrative Law

Judge Donald K. Duvall, U.S. International Trade Commission, 701 E Street NW., Washington, D.C. 20436, shall designate the presiding officer.

Responses must be submitted by the named respondents in accordance with section 210.21 of the Commission's Rules of Practice and Procedure, as amended (19 CFR 210.21). Pursuant to sections 201.16(d) and 210.21(a) of the rules, such responses will be considered by the Commission if received not later than 20 days after the date of service of the complaint. Extensions of time for submitting a response will not be granted unless good and sufficient cause therefor is shown.

Failure of a respondent to file a timely response to each allegation in the complaint and in this notice may be deemed to constitute a waiver of the right to appear and contest the allegations of the complaint and this notice, and to authorize the presiding officer and the Commission, without further notice to the respondent, to find the facts to be as alleged in the complaint and this notice and to enter both a recommended determination and a final determination containing such finding.

Pursuant to section 337(b)(3) of the Tariff Act of 1930, as amended by section 1105(a)(2) of the Trade Agreements Act of 1979, and section 201.4(d) of the Commission's Rules of Practice and Procedure, the Commission is notifying the Secretary of the Treasury that it has reason to believe that this matter is based in part on alleged acts and effects which are within the purview of section 303 of the Tariff Act of 1930 or of the Antidumping Act, 1921.

The complaint, except for the confidential information contained therein, is available for inspection by interested persons at the Office of the Secretary, U.S. International Trade Commission, 701 E Street NW., Washington, D.C. 20436, and in the Commission's New York City office, 6 World Trade Center, New York, N.Y. 10048.

By order of the Commission.

Issued: December 14, 1979.

KENNETH R. MASON,
Secretary.

In the Matter of CERTAIN INCLINED-FIELD ACCELERATION TUBES AND COMPONENTS THEREOF	Investigation No. 337-TA-67

Notice of Prehearing Conference and Hearing

Notice is hereby given that a prehearing conference will be held in

this case at 9:30 a.m. on January 10, 1980, in room 610, Bicentennial Building, 600 E Street NW., Washington, D.C. The purpose of this prehearing conference is to review the prehearing statements submitted by the parties, to complete the exchange of exhibits, and to resolve any other necessary matters in preparation for the hearing.

Notice is also given that the hearing in this proceeding will commence at 9:30 a.m. on January 14, 1980, in room 610, Bicentennial Building, 600 E Street NW., Washington, D.C.

The Secretary shall publish this notice in the Federal Register.

Issued: December 17, 1979.

JANET D. SAXON,
Administrative Law Judge.

The U.S. International Trade Commission issued in December 1979 a volume containing the legal text of the Tariff Schedules of the United States, as amended and modified. This volume, entitled "Tariff Schedules of the United States Annotated (1980)," (TSUSA) contains major revisions pursuant to the Trade Agreements Act of 1979 (93 Stat. 147) and concessions granted in the Geneva (1979) Protocol to the General Agreement on Tariffs and Trade (GATT). These revisions relate to staged reductions in rates of duty as well as necessary language and numbering changes. It also includes a new rate-of-duty column entitled "LDDC" which rate reflects the full tariff reduction without staging, for certain products of the least developed developing countries (LDDC's) pursuant to section 503(a)(2)(A) of the Trade Agreements Act of 1979, and changes made in the reporting of statistical data under the provisions of section 484(e), Tariff Act of 1930.

This volume is being published under the authority of section 201 of the Tariff Classification Act of 1962 and contains all changes in the schedules made on or after the effective date of that act (August 31, 1963) and before December 11, 1979, together with annotations prescribing statistical information to be supplied on Customs forms.

This publication is for sale by the Superintendent of Documents, U.S. Government Printing Office, Washington, D.C. 20402. Subscriptions thereto will be handled as follows:

The "TSUSA (1980)," including all supplements thereto, can be purchased at subscription price of $28 for first-class mailing or $23 for fourth-class mailing within the United States and possessions. For mailing to all other countries, the subscription prices are $35 for

first-class mailing or $28.75 for fourth-class. The blank form provided below may be used in ordering this publication. Remittances, which must accompany all orders, should be sent directly to the Government Printing Office.

ORDER FORM Mail To: Superintendent of Documents, U.S. Government Printing Office, Washington, D.C. 20402

Enclosed is $ _____ ☐ check, ☐ money order, or charge to my Deposit Account No.

☐☐☐☐☐☐☐–☐

Order No. _____

Credit Card Orders Only

Total charges $_____ Fill in the boxes below.

Credit Card No. ☐☐☐☐☐☐☐☐☐☐☐☐☐☐☐☐☐☐☐☐

Expiration Date Month/Year ☐☐☐☐

Please enter _____ subscription(s) to the TARIFF SCHEDULES OF THE UNITED STATES ANNOTATED (1980) (TSA) File Code:1A

Name—First, Last

Street address

Company name or additional address line

City State ZIP Code

(or Country)

PLEASE PRINT OR TYPE

For Office Use Only.

	Quantity	Charges
Enclosed		
To be mailed		
Subscriptions		
Postage		
Foreign handling		
MMOB		
OPNR		
UPNS		
Discount		
Refund		

Index

U.S. Customs Service

	T.D. No.
Treasury decisions:	
Cotton, wool, and manmade fiber textile products—Macau	80-6
Manmade fiber textile—Philippines	80-7
Cotton and manmade fiber textile products—People's Republic of China	80-8
Cotton textiles and cotton textile products—Pakistan	80-9
	C.A.D. No.
U.S. Court of Customs and Patent Appeals: Schott Optical Glass, Inc. v. The United States	1239

Customs Court

Analogous biological product; diagnostic serum, C.D. 4830
Antiques:
- Coral and jade carvings, C.D. 4829
- Duty-free entry, C.D. 4829
- Expert testimony, C.D. 4829

Articles of copper, not coated or plated with precious metal, C.D. 4831
Biological product; serums used for diagnosis, C.D. 4830
Carvings:
- Coral, C.D. 4829
- Coral and jade, C.D. 4829
- Jade, C.D. 4829

Construction:
- Code of Federal Regulations, title 19:
  - Sec. 18.6(c), C.R.D. 79-17
  - Sec. 174.13, C.R.D. 79-17
- Customs Regulations, sec. 174-13, C.R.D. 79-17
- Rules of U.S. Customs Court:
  - Rule 4.7, C.R.D. 79-17
  - Rule 4.12, C.R.D. 79-17
- Tariff Act of 1930:
  - Sec. 514, C.R.D. 79-17
  - Sec. 514(a)(3), C.R.D. 79-17
  - Sec. 514(2), C.R.D. 79-17
- Tariff Schedules of the United States:
  - General Headnotes and Rules of Interpretation, rule 10(b), C.D. 48[illegible]1
  - Item 437.76, C.D. 4830
  - Item 520.61, C.D. 4829
  - Item 657.30, C.D. 4831
  - Item 740.38, C.D. 4831

Item 765.15, C.D. 4829
Item 765.25, C.D. 4829
Item 766.25, C.D. 4829
Item 799.00, C.D. 4830
U.S. Code, title 28:
Sec. 1582(a), C.R.D. 79–17
Sec. 2631, C.R.D. 79–17
Sec. 2632, C.R.D. 79–17
Coral:
And jade carvings; antiques, C.D. 4829
Carvings, C.D. 4829
Cross-motions for summary judgment, C.D.'s 4830, 4831
Definition; biological product, C.D. 4830
Diagnostic serum; analogous biological product, C.D. 4830
Duty-free entry; antiques, C.D. 4829
Expert testimony; antiques, C.D. 4829
Flats:
Liberty Bell flat, C.D. 4831
Mittersill flat, C.D. 4831
Free fine arts, original works of, C.D. 4829
General Interpretative Rule 10(h) employed; unfinished parts, C.D. 4831
Jade carvings, C.D. 4829
Jewelry, parts of; unfinished metal flats, C.D. 4831
Judgment in appealed case (p. —);
Appeal 79–3—Errors in appraised value of automobiles; motion to dismiss; lack of jurisdiction
Jurisdiction, protest sufficient to grant, C.R.D. 79–17
Legislative history; Tariff Classification Study, 1960, Explanatory and Background Materials, schedule 4, part 3, p. 86, C.D. 4830
Letter; protest, sufficiency of, C.R.D. 79–17
Liberty Bell flat; flats, C.D. 4831
Mail; presumption, C.R.D. 79–17
Metal flats, unfinished; unfinished parts, C.D. 4831
Mittersill flat; flats, C.D. 4831
Motion to dismiss action denied; protest valid, C.R.D. 79–17
Original:
Sculptures, C.D. 4829
Works of the free fine arts, C.D. 4829
Other articles, not specially provided for of semiprecious stones, C.D. 4829
Parts of jewelry, C.D. 4831
Presumption; mail, C.R.D. 79–17
Protest:
Letter as, C.R.D. 79–17
Sufficiency of; letter, C.R.D. 79–17
Sufficient to grant jurisdiction, C.R.D. 79–17
Timeliness, C.R.D. 79–17
Valid; motion to dismiss action denied, C.R.D. 79–17
Sculptures, original, C.D. 4829
Semiprecious stones, other articles not specially provided for, C.D. 4829
Serums used for diagnosis; biological product, C.D. 4830
Stare decisis rule applied, C.D. 4830
Summary judgment, cross-motions for, C.D.'s 4830, 4831
Summons; timeliness, C.R.D. 79–17

Timeliness:
Protest, C.R.D. 79–17
Summons, C.R.D. 79–17
Unfinished:
Metal flats; jewelry, parts of, C.D. 4831
Parts:
General Interpretative Rule 10(h) employed, C.D. 4831
Metal flats, unfinished, C.D. 4831
Words and phrases; biological product, C.D. 4830

Customs Bulletin
And Decisions

Vol.14 no.3

NOTICE

The abstracts, rulings, and notices which are issued weekly by the U.S. Customs Service are subject to correction for typographical or other printing errors. Users may notify the U.S. Customs Service, Logistics Management Division, Washington, D.C. 20229, of any such errors in order that corrections may be made before the bound volumes are published.

For sale by the Superintendent of Documents, U.S. Government Printing Office, Washington, D.C. 20402. Price: $1.30 (single copy domestic); $1.65 (single copy foreign). Subscription price: $65.00 a year domestic; $81.25 a year foreign.

U.S. Customs Service

Treasury Decisions

(T.D. 80-10)

Entry of Merchandise—Customs Regulations, Amended

Informal entry of merchandise which qualifies for entry free of duty under the generalized system of preferences; section 143.23, Customs Regulations, amended

TITLE 19—CUSTOMS DUTIES

CHAPTER I—U.S. CUSTOMS SERVICE

PART 143—APPRAISEMENT AND INFORMAL ENTRIES

AGENCY: U.S. Customs Service, Department of the Treasury.

ACTION: Final rule.

SUMMARY: This document amends section 143.23, Customs Regulations, to permit the informal entry on Customs Form 7523, "Entry and Manifest of Merchandise Free of Duty, Carrier's Certificate and Release," of merchandise, regardless of value, which qualifies for entry free of duty under the generalized system of preferences, if the merchandise is imported for noncommercial purposes. Use of Customs form 7523 provides a simpler and more economic and efficient procedure than the existing procedure.

EFFECTIVE DATE: (30 days after publication in the Federal Register.)

FOR FURTHER INFORMATION CONTACT: Drury F. Williford, Inspection and Control Division, U.S. Customs Service, 1301 Constitution Avenue NW., Washington, D.C. 20229; 202-566-5354.

SUPPLEMENTARY INFORMATION:

BACKGROUND

Section 143.23(d), Customs Regulations (19 CFR 143.23(d)), presently provides that shipments not exceeding $250 in value which are either (1) unconditionally free of duty and not subject to any

quota or internal revenue tax, or (2) conditionally free, and all conditions for free entry are met at the time of entry, may be released upon the filing by the importer of Customs Form 7523, "Entry and Manifest of Merchandise Free of Duty, Carrier's Certificate and Release," in duplicate, supported by evidence of the right to make entry. Under this section and section 10.173(a)(5)(i), Customs Regulations (19 CFR 10.173(a)(5)(i)), merchandise (1) for personal or household use, (2) not intended for resale or imported for the account of others, (3) not in excess of $250 in value, and (4) entitled to entry free of duty under the GSP, may be entered on Customs Form 7523 without a certificate of origin if the certificate is waived by the district director. However, personal or household-use merchandise which qualifies for entry free of duty under the GSP and exceeds $250 in value is entered on Customs Form 5119–A, "Informal Entry," or if authorized by the district director, upon presentation by the importer of a commercial invoice containing a signed declaration that the invoice is correct.

Customs form 7523 may serve as three documents: A manifest, an entry document, and a carrier's certificate and release order. While it must be prepared in duplicate, it may be prepared by the importer and is unnumbered, requiring no formal accountability. On the other hand, Customs form 5119–A serves as an entry document only, is printed in four parts, must be prepared by a Customs inspector, and because it is numbered, requires complete accountability. Further, Customs form 5119–A requires more information to complete and must be reviewed by a supervisory Customs inspector. For these reasons, use of Customs form 7523 provides a simpler and more economical and efficient procedure for the informal entry of GSP merchandise imported for noncommercial purposes. Use of Customs form 7523 in place of Customs form 5119–A would not have any adverse effect on the collection of the revenue or import statistics.

Accordingly, section 143.23, Customs Regulations, is being amended to permit the informal entry on Customs form 7523 of merchandise, regardless of value, which qualifies for entry free of duty under the GSP, if imported for noncommercial purposes.

INAPPLICABILITY OF PUBLIC NOTICE AND DELAYED EFFECTIVE DATE REQUIREMENTS

Because this amendment pertains solely to agency procedure and liberalizes existing requirements, notice and public procedure are unnecessary.

REGULATION DETERMINED TO BE NONSIGNIFICANT

In a directive published in the Federal Register on November 8, 1978 (43 F.R. 52120), implementing Executive Order 12044, "Improving Government Regulations," the Treasury Department stated that it considers each regulation or amendment to an existing regulation published in the Federal Register and codified in the Code of Federal Regulations to be "significant." However. it has been determined that this amendment does not meet the Treasury Department criteria in the directive for a "significant" regulation because it is nonsubstantive, essentially procedural, does not materially change existing or establish new policy, and does not impose substantial additional requirements or costs on, or substantially alter the legal rights or obligations of, those affected.

DRAFTING INFORMATION

The principal author of this document was Laurie Strassberg Amster, Regulations and Legal Publications Division, Office of Regulations and Rulings, U.S. Customs Service. However, personnel from other Customs offices participated in its development.

AMENDMENT TO THE REGULATIONS

Section 143.23, Customs Regulations (19 CFR 143.23), is amended by revising paragraph (d) and adding a new paragraph (g), to read as follows:

PART 143—CONSUMPTION, APPRAISEMENT, AND INFORMAL ENTRIES

143.23 Form of entry

* * * * * * *

(d) Shipments not exceeding $250 in value which are either (1) unconditionally free of duty and not subject to any quota or internal revenue tax, or (2) conditionally free (other than shipments of merchandise provided for in paragraph (g) of this section) and all conditions for free entry are met at the time of entry, which may be released upon the filing by the importer on Customs form 7523, in duplicate, supported by evidence of the right to make entry.

* * * * * * *

(g) Merchandise, regardless of value, which is imported for noncommercial purposes, which qualifies for entry free of duty under the generalized system of preferences (see secs. 10.171–10.178 of this chapter), and for which informal entry may be made on Customs form 7523, in duplicate.

(R.S. 251, as amended, secs. 484, 498, 624, 46 Stat. 722, as amended, 728, as amended, 729 (5 U.S.C. 301, 19 U.S.C. 66, 1484, 1498, 1624).)

R. E. CHASEN,
Commissioner of Customs.

Approved: December 10, 1979.
RICHARD J. DAVIS,
Assistant Secretary of the Treasury.

[Published in the Federal Register Jan. 4, 1980 (44 F.R. 1012)]

(T.D. 80-11)

TITLE 19—CUSTOMS DUTIES

CHAPTER I—U.S. CUSTOMS SERVICE, DEPARTMENT OF THE TREASURY

PART 159—LIQUIDATION OF DUTIES

Ferroalloys From Spain

Final countervailing duty determination

AGENCY: U.S. Customs Service, Treasury Department.

ACTION: Final countervailing duty determination.

SUMMARY: This notice is to inform the public that a countervailing duty investigation has resulted in a determination that the Government of Spain has provided benefits which constitute bounties or grants within the meaning of the countervailing duty law on the manufacture, production, or export of ferroalloys. Deposited countervailing duties in the amount of these benefits will be required at the time of entry in addition to duties normally collected on dutiable shipments of the merchandise.

EFFECTIVE DATE: (Jan. 4, 1980.)

FOR FURTHER INFORMATION CONTACT: Leon McNeill, Technical Branch, U.S. Customs Service, 1301 Constitution Avenue NW., Washington, D.C. 20229; 202-566-5492.

SUPPLEMENTARY INFORMATION: On August 16, 1979, a notice of "Preliminary Countervailing Duty Determination" was published in the Federal Register (44 F.R. 48022). That notice stated that it had been determined preliminarily that benefits bestowed by the Government of Spain upon the manufacture, production, and/or export of ferroalloys constitute the payment or bestowal of a bounty or grant, directly or indirectly, within the meaning of section 303, Tariff Act of 1930, as amended (19 U.S.C. 1303) (hereinafter the act). The instant determination includes ferroalloys described under the following item numbers of the Tariff Schedules of

the United States Annotated (TSUSA): Ferrochrome (over 3 percent carbon), TSUSA 607.3100; ferromanganese (1 to 4 percent carbon), TSUSA 607.3600; ferromanganese (over 4 percent carbon), TSUSA 607.3700; ferrosilicon manganese, TSUSA 607.5700; and ferrosilicon (60 to 80 percent silicon), TSUSA 607.5100. All of these products are dutiable.

On the basis of an investigation conducted under section 159.47(c) of the Customs Regulations (19 CFR 159.47(c)), and after consideration of comments by the interested parties, it has been determined that certain programs administered or mandated by the Government of Spain constitute the bestowal of bounties or grants within the meaning of the act.

These programs are the following:

(1) *Overrebate, upon exportation, of Spanish indirect taxes under the "Desgravacion Fiscal"*.—Tax rebates under this program are to account for the cascade effect of the Spanish indirect tax system. Treasury regards the rebate of indirect taxes on services and inputs not physically incorporated in the final product as countervailable. See 44 F.R. 3476 (January 17, 1979). In this case, the overrebate consists of three elements:

(1) Indirect taxes on services and inputs which are not physically incorporated in the final product. Physical inputs which are considered to be physically incorporated include minerals, ferroalloy briquets, scrap, quartz, and, in the case of ferromanganese with not more than 2 percent carbon, silicomanganese. Each of these inputs provides components which are present in the final product and enhance its value. Physical inputs which do not meet this test are electrode paste which is a catalyst, coal added as a reducing agent, and limestone added as a fluxing agent. Although carbon from the coal is present in the final product, this is incidental to the manufacture of ferroalloys and does not add to their value, and thus has been disallowed;

(2) A credit for a tax on transactions between manufacturers and wholesalers that in this case is not levied on export sales; and

(3) Various "parafiscal" taxes which fail to meet the physical incorporation or direct relationship tests. Each of the taxes in the above categories has been considered countervailable in prior investigations of imports from Spain. The rebate of a tax on export freight and insurance is a rebate upon export of an indirect tax directly related to the product, and, thus, is not countervailable on the basis of *Zenith Radio Corp.* v. *United States*, 437 U.S. 443 (1978).

The "Notice of Preliminary Determination" in the instant case stated that the total amount of taxes rebated on services and inputs which meet the direct relationship or physical incorporation tests was

8.3 percent ad valorem. However, in view of information since received regarding the use of coal and limestone, that total has been reduced to 6.89 percent. In the case of 75 percent ferrosilicon, an allowance would be made for 1 percent of the limestone, which is physically incorporated. However, this is equal to 0.0006 percent of the value of the product, and does not alter the final computation.

The overrebate of taxes under the desgravacion fiscal is 3.11 percent ad valorem; except for ferromanganese containing 2 percent carbon or less, which receives a higher rebate, but also bears a higher burden of allowable taxes, resulting in an overrebate of 2.15 percent ad valorem.

(2) *Regional development incentives.*—The Government of Spain offers several incentives to promote development in the Valle de Cinca and Greater Galician industrial areas. These incentives include: Preferences in obtaining official credit, absent other credit sources; forced expropriation; freedom of amortization over the first 5 years of the life of an installation; and certain tax reductions. Of these programs, no producer of ferroalloys has used official credit. One firm made use of forced expropriation for power transmission lines, but the firm was required to pay the market value of the land so acquired. One firm, S.E. de Carburos Metalicos S.A. (Carburos) made use of the provisions for freedom from amortization. The net benefit to the firm is 0.006 percent ad valorem. With regard to various tax reductions, only one firm, Hidro Nitro Espanolas S.A. (Hidro Nitro), made use of a provision for a reduction by 95 percent of import taxes on machinery and equipment not produced in Spain. The net benefit accruing to Hidro Nitro is 0.005 percent ad valorem. While these benefits would be considered countervailable, the ad valorem benefits accruing to the firms in this case are of amounts which do not alter the calculation of the aggregate net ad valorem benefit. No other regional tax incentive has been used.

(3) *Operating capital loans.*—Ferroalloy producers are eligible to receive preferential operating capital loans in amounts up to 30 percent of the previous year's export sales. The Spanish Government requires commercial banks to reserve a specific proportion of lendable funds for this program. These loans are made for a period of less than 1 year, at a rate of 8 percent plus banking commissions and fees. This is 1.5 percent below the commercially available rate of 9.5 percent plus commissions and fees for loans of less than 1 year, which rate ceiling also is established by law. The weighted average net benefit conferred upon the producers which export ferroalloys to the United States is 0.25 percent ad valorem.

Programs determined not to constitute bounties or grants within the meaning of the act include:

(1) Tax-free export investment reserve.
(2) Construction loans.
(3) Short-term prefinancing loans.
(4) Loans on deferred payments.
(5) Commercial services loans.
(6) Foreign buyers loans.

None of these programs has been used by exporters of ferroalloys. Also determined not to constitute a bounty or grant within the meaning of the act is the "exporter's card." This card provides the holder with increased access to funds under the operating capital loans program. However, any benefit is realized through the interest rate differential. In the absence of such a loan, no benefit is conferred upon the cardholder.

After consideration of the available information and comments by the interested parties, it is hereby determined that exports of ferroalloys from Spain benefit from bounties or grants within the meaning of section 303, Tariff Act of 1930, as amended. The amounts of overrebate under the desgravacion fiscal have been determined in accordance with the "Notice of Revised Method for Calculation of Bounty or Grant with Regard to Certain Indirect Taxes," published in the Federal Register on January 17, 1979 (44 F.R. 3476).

Accordingly, notice is hereby given that ferroalloys entering under item Nos. 607.3100, 607.3600, 607.3700, 607.5700, and 607.5100, TSUSA, which are imported directly or indirectly from Spain, if entered, or withdrawn from warehouse, for consumption on or after the date of publication of this notice in the Federal Register will be subject to the payment of countervailing duties equal to the net amount of the bounties or grants determined or estimated to have been bestowed.

In accordance with section 303 of the act and until further notice, the net amount of such bounties or grants has been ascertained and determined to be 3.36 percent of the f.o.b. value of the ferroalloys entering under item Nos. 607.3100, 607.3700, 607.5700, and 607.5100, TSUSA. The net amount of bounties or grants bestowed upon ferromanganese containing not more than 2 percent carbon entering under item No. 607.3600, TSUSA, has been ascertained and determined to be 2.40 percent ad valorem. Ferromanganese containing more than 2 percent carbon, entering under this item number receives bounties or grants which have been ascertained and determined to be 3.36 percent of the f.o.b. price. All ferromanganese from Spain entering under this

307-464—80——2

item number shall be subject to payment of a countervailing duty of this higher amount, unless satisfactory documentation is presented at the time of entry, or withdrawal from warehouse, for consumption which shows that the merchandise contains not more than 2 percent carbon. This documentation should include an analysis by the producer stating the carbon content, and must be confirmed by an analysis by the U.S. Customs Service at the port of entry. Merchandise which satisfies this requirement shall be subject to the payment of a countervailing duty equal to the lower rate of 2.40 percent of the f.o.b. price.

Effective on or after the date of publication of this notice, and until further notice, there shall be collected, in addition to any other duties estimated or determined to be due, countervailing duties in the amounts ascertained in accordance with the above declaration upon the entry, or withdrawal from warehouse, for consumption of ferroalloys described in this notice imported directly or indirectly from Spain, which benefit from these bounties or grants. To the extent that it can be established to the satisfaction of the Commissioner of Customs that imports of one or more of these ferroalloys are benefiting from a bounty or grant smaller than the amount which otherwise would be applicable under the above declaration, the smaller amount so established shall be assessed and collected.

Any merchandise subject to the terms of this order shall be deemed to have benefited from a bounty or grant if such bounty or grant has been or will be credited or bestowed, directly or indirectly, upon the manufacture, production, or exportation of ferroalloys from Spain described above.

The table in section 159.47(f), Customs Regulations (19 CFR 159.47(f)), is amended by inserting after the last entry for "Spain" the word "ferroalloys" in the column headed "Commodity," the number of this Treasury decision in the column headed "Treasury decision," and the words "Bounty declared-rate" in the column headed "Action."

(R.S. 251 as amended, secs. 303, as amended, 624, 46 Stat. 687, as amended, 759 (19 U.S.C. 66, 1303, 1623).)

This final determination is published pursuant to section 303(a), Tariff Act of 1930, as amended (19 U.S.C. 1303(a)).

Pursuant to Reorganization Plan No. 26 of 1950 and Treasury Department Order No. 101-5, May 16, 1979, the provisions of Treasury Department Order No. 165, revised, November 2, 1954, and section 154.47, Customs Regulations (19 CFR 154.47), insofar as they

pertain to the issuance of a final countervailing duty determination by the Commissioner of Customs, are hereby waived.

Dated: December 26, 1979.

ROBERT H. MUNDHEIM,
General Counsel of the Treasury.

[Published in the Federal Register, Jan. 2, 1980 (45 F.R. 25)]

(T.D. 80-12)

Water-Circulating Pumps From the United Kingdom

Notice of modification or revocation of dumping finding

AGENCY: U.S. Treasury Department.

ACTION: Revocation of dumping finding.

SUMMARY: This notice is to advise the public that water-circulating pumps from the United Kingdom are no longer being sold to the United States at less than fair value under the Antidumping Act of 1921. Additionally, the sole United Kingdom manufacturer has given assurances that it is not now selling nor does it intend to sell water-circulating pumps to the United States at less than fair value. This notice revokes the finding of dumping with respect to water-circulating pumps from the United Kingdom (T.D. 76-190). As a result, shipments of water-circulating pumps from the United Kingdom which were entered, or withdrawn from warehouse, for consumption on or after October 15, 1979, will not be liable for dumping duties.

EFFECTIVE DATE: (Date of publication in the Federal Register.)

FOR FURTHER INFORMATION CONTACT: Susan Crawford, Trade Analysis Division, U.S. Customs Service, 1301 Constitution Avenue NW., Washington, D.C. 20229; telephone 202-566-5492.

SUPPLEMENTARY INFORMATION: On July 7, 1976, a finding of dumping with respect to water-circulating pumps from the United Kingdom was published in the Federal Register as T.D. 76-190 (41 F.R. 27843). A "Notice of Tentative Determination to Modify or Revoke Dumping Finding" with respect to this merchandise from the United Kingdom was published in the Federal Register on October 15, 1979 (44 F.R. 59312).

Reasons for the tentative determination were published in the above-mentioned notice and interested persons were afforded an

opportunity to provide written submissions or request an opportunity to present oral views in connection therewith.

No written submissions or requests having been received, I hereby determine that, for the reasons stated in the "Notice of Tentative Determination to Modify or Revoke Dumping Finding," water-circulating pumps from the United Kingdom are not being, nor are likely to be sold at less than fair value, and T.D. 76–190 is hereby revoked.

Accordingly, section 153.46 of the Customs Regulations (19 CFR 153.46) is hereby amended by deleting from the column headed "Merchandise" the words "water-circulating pumps, wet motor type," and from the column headed "country," the words "United Kingdom," and from the column headed "Treasury decision," reference to T.D. 76–190.

This notice is published pursuant to section 153.44(d) of the Customs Regulations (19 CFR 153.44(d)). (Secs. 201, 407, 42 Stat. 11, as amended, 18; 19 U.S.C. 160, 173.)

Dated: December 28, 1979.

ROBERT H. MUNDHEIM,
General Counsel of the Treasury.

[Published in the Federal Register, Jan. 4, 1980 (45 F.R. 1013)]

(T.D. 80–13)

TITLE 19—CUSTOMS DUTIES

CHAPTER I—U.S. CUSTOMS SERVICE, DEPARTMENT OF THE TREASURY

PART 159—LIQUIDATION OF DUTIES

Non-rubber Footwear, Certain Castor Oil Products, Scissors and Shears, and Cotton Yarn From Brazil

Declaration of net amount of bounty or grant and suspension of liquidation

AGENCY: U.S. Customs Service, Treasury Department.

ACTION: Net amount of bounty or grant declared and suspension of liquidation.

SUMMARY: This notice is to advise the public of new rates of countervailing duty applicable to imports of nonrubber footwear, certain castor oil products, scissors and shears, and cotton yarn from Brazil. Liquidation of entries of this merchandise will be suspended

pending receipt of updated information on remaining bounties or grants and estimated countervailing duties will be collected.

EFFECTIVE DATE: Exports on or after December 7, 1979.

FOR FURTHER INFORMATION CONTACT: Mr. Charles F. Goldsmith, economist, Office of Tariff Affairs, U.S. Department of the Treasury, 15th Street and Pennsylvania Avenue NW., Washington, D.C. 20220; telephone 202-566-2951.

SUPPLEMENTARY INFORMATION: In the Federal Register of May 17, 1979 (44 F.R. 28790-92), it was announced that due to actions taken by the Government of Brazil to eliminate export payments which have been determined by Treasury to constitute bounties or grants, reductions of countervailing duty rates applicable to imports of nonrubber footwear, certain castor oil products, scissors and shears, and cotton yarn, would be made quarterly to reflect the staged reduction of these benefits. However, on December 7, 1979, the Government of Brazil announced that the export payments, which were in the form of IPI credits, would be eliminated immediately instead of over a 4-year period as had been previously declared. Accordingly, this notice adjusts the countervailing duty rates on the subject merchandise to take into account the immediate elimination of the IPI credits.

The countervailing duty rates declared in this notice reflect other programs, such as preferential financing, which were originally found in each of the cases to have conferred a bounty or grant. Pending receipt of updated information regarding the utilization of the other programs, liquidation of entries of the subject merchandise will be suspended and estimated countervailing duties will be collected.

Accordingly, notice is hereby given that dutiable, nonrubber footwear, certain castor oil products, scissors and shears, and cotton yarn, imported directly or indirectly from Brazil, and exported from that country on or after December 7, 1979, which benefit from bounties or grants, shall be subject, in addition to any other duties determined or estimated to be due, to payment of countervailing duties equal to the net amount of any bounty or grant ascertained and determined or estimated to have been paid or bestowed, if entered, or withdrawn from warehouse, for consumption after the date of publication of this notice in the Federal Register.

In accordance with section 303 of the act, and until further notice, the net amount of such bounties or grants has been estimated and declared to be:

(1) Nonrubber footwear, 1 percent;

(2) Certain castor oil products, 1 percent;

(3) Scissors and shears, 2.5 percent;

(4) Cotton yarn, 2.5 percent.

All of the above are expressed in terms of the f.o.b. or exworks price to the United States of the applicable merchandise.

The liquidation of all entries, or withdrawals from warehouse, for consumption of nonrubber footwear, certain castor oil products, scissors and shears, and cotton yarn, imported directly or indirectly from Brazil, which benefit from such bounties or grants, shall be suspended effective as of the date this notice is published in the Federal Register. A deposit of the estimated countervailing duty shall be required at the time of entry, or withdrawal from warehouse, for consumption.

Effective on the date of publication of this notice in the Federal Register and until further notice, upon the entry, or withdrawal from warehouse, for consumption of this merchandise, imported directly or indirectly from Brazil, which benefits from these bounties or grants, there shall be deposited, in addition to any other duties estimated or determined to be due, countervailing duties in the amount estimated in accordance with the above declaration. To the extent that it can be established to the satisfaction of the Commissioner of Customs that imports of the merchandise covered by this determination are benefiting from a bounty or grant smaller than the amount which otherwise would be applicable under the above declaration, the smaller amount so established shall be deposited.

Any merchandise subject to the terms of this order shall be deemed to have benefited from a bounty or grant if such bounty or grant has been or will be credited or bestowed, directly or indirectly, upon the manufacture, production, or exportation of nonrubber footwear, certain castor oil products, scissors and shears, and cotton yarn from Brazil.

The table in section 159.47(f) of the Customs Regulations (19 CFR 159.47(f)) is amended by inserting after the last entry for "nonrubber footwear," "certain castor oil products," "scissors and shears," and "cotton yarn," respectively, under the country heading "Brazil," the number of this Treasury Decision in the column so headed and the words "New rate" in the column headed "Action."

(R.S. 251, sec. 303, as amended, 624; 46 Stat. 687, 759, 88 Stat. 2049; 19 U.S.C. 66, 1303, as amended, 1624.)

Dated December 28, 1979.

ROBERT H. MUNDHEIM,
General Counsel of the Treasury.

[Published in the Federal Register, Jan. 4, 1980 (45 F.R. 1013)]

Decisions of the United States Customs Court

United States Customs Court
One Federal Plaza
New York, N.Y. 10007

Chief Judge
EDWARD D. RE

Judges

Paul P. Rao
Morgan Ford
Scovel Richardson
Frederick Landis
James L. Watson
Herbert N. Maletz
Bernard Newman
Nils A. Boe

Senior Judge
Samuel M. Rosenstein

Clerk
Joseph E. Lombardi

Customs Decisions

(C.D. 4832)

EDGE IMPORT CORP., PLAINTIFF *v.* UNITED STATES, DEFENDANT

Court No. 75-8-02155

Hunting Knives—Knives With Stag Handles—Knives With Wood Handles—Other

Imported knives with metal pommels and metal guards containing stag horn or wood in their handles which were classified by Customs as knives, other; other, under TSUS item 650.21, as modified by T.D. 68-9, were claimed by plaintiff to be properly classifiable as knives with stag horn or wood in their handles under TSUS item 650.13 or 650.19, respectively, as modified. HELD, properly

classified by Customs as knives, other; other, under item 650.21, as modified.

CLASSIFICATION—HUNTING KNIVES WITH METAL POMMELS AND METAL GUARDS

Knives with metal pommels and metal guards may not be classified as knives with wood or stag handles because of their metal elements.

CLASSIFICATION—TRADE MEANING

Even assuming imported merchandise is known in the trade as wood-handled or stag-handled knives, this is not necessarily determinative of its classification. *United States* v. *Ignaz Strauss & Co., Inc.*, 37 CCPA 32, 35, C.A.D. 415 (1949). *See also Hancock Gross, Inc.* v. *United States*, 73 Cust. Ct. 72, C.D. 4555, 383 F. Supp. 832 (1974), *aff'd*, 62 CCPA 100, C.A.D. 1153, 517 F. 2d 951 (1975).

EVIDENCE—BURDEN OF PROOF

Plaintiffs in this court bear a burden of proof to demonstrate the incorrectness of the Customs Service's classification and to establish the propriety of their asserted classification, whether primary or alternative. *United States* v. *New York Merchandise Co., Inc.*, 58 CCPA 53, C.A.D. 1004, 435 F. 2d 1315 (1970). Plaintiff has failed to meet that burden here.

[Judgment for defendant.]

(Decided December 17, 1979)

Greenwald, Kovner & Goldsmith (*Frank J. Hariton* at the trial; *Leo Goldsmith, Jr.*, on the briefs) for the plaintiff.

Alice Daniel, Assistant Attorney General; *Joseph I. Liebman*, Attorney in Charge, Field Office for Customs Litigation (*Susan Handler-Menahem* at the trial and on the brief), for the defendant.

LANDIS, Judge: This case involves the importation of hunting knives exported from Germany and entered at New York in 1973 and 1974. The prior opinion of this court, C.R.D. 79–7, denying defendant's motion to strike portions of plaintiff's brief, appears in 82 Cust. Ct. ——.

The Customs Service heretofore classified the imported knives under TSUS item 650.21, as modified by T.D. 68–9, and assessed duty thereon at the rate of 0.5 cent each plus 8.5 per centum ad valorem. Plaintiff in its complaint claims that those knives which contain stag horn in their handles are properly classifiable under TSUS item 650.13, as modified by T.D. 68–9, and dutiable at the rate of 2 cents each plus 6 per centum ad valorem. Plaintiff further claims that those knives which contain wood in their handles are properly classifiable under TSUS item 650.19, as modified by T.D. 68–9, and dutiable at the rate

of 1 cent each plus 6 per centum ad valorem. Finally, plaintiff alternatively claims that prior Customs practice requires a result in its favor.

For the reasons stated below, it is the determination of the court that the classification relied upon by the defendant shall prevail.

The pertinent provisions of the tariff schedules, as modified by T.D. 68–9, are as follows:

SCHEDULE 6. – METALS AND METAL PRODUCTS

PART 3. – METAL PRODUCTS

* * * * * * *

Subpart E. – Tools, Cutlery, Forks and Spoons

* * * * * * *

Knives not specifically provided for elsewhere in this subpart, and cleavers, with or without their handles:

* * * * * * *

Knives with their handles:

* * * * * * *

650.13	With animal horn, bone, ivory, mother-of-pearl, or shell handles	2¢ each + 6% ad val.

* * * * * * *

Other:

650.19	Hunting knives with wood handles	1¢ each + 6% ad val.
650.21	Other	0.5¢ each + 8.5% ad val.

In this case there is the question of whether a knife, containing a *metal* guard and *metal* pommel may be classified as a stag-handled knife or a wood-handled knife. This raises the issue of whether a guard and pommel are part of the handle of a knife. (The guard of a knife is that horizontal piece which separates the blade from the remainder of the handle. The pommel is at the very end of the knife. The guard is largely a safety feature while the pommel has esthetic value and also occasionally holds the knife together.) A subsidiary question plaintiff has made reference to is whether prior classification by the Customs Service bars the classification made herein.

Two witnesses were offered by plaintiff and one by defendant. Plaintiff's witnesses, however, were ineffective and not particularly persuasive.

Plaintiff's first witness was Mr. Tom Palmer, who for 7 years was vice president of Gutman Cutlery Co. (the parent of plaintiff). He was involved in sales and purchasing for the company with "special emphasis on product design" (r. 4).

Mr. Palmer stated he agreed with Webster's Seventh New Collegiate Dictionary's definition of handle—"a part that is designed to be grasped by the hand" (r. 8). Mr. Palmer further stated, in the major portion of his testimony, that in the knife trade the exhibits in the case would be known as stag-handled or wood-handled knives. (See, e.g., r. 7, 23.) This was because the portion that was held was either wood or stag. However, on cross-examination, counsel for the defendant brought out that Palmer, while demonstrating how a knife is held, also had his hand, more particularly his thumb, wrapped around the metal guard as well (r. 49–50). Thus the guard would appear to be a segment of the handle. Nevertheless, Palmer stated that manufacturers, distributors, and consumer referred to the importations as stag-handled or wood-handled knives. This opinion was largely endorsed by numerous knife catalogs introduced by the plaintiff. However, even if the imported merchandise is known in the trade as wood-handled or stag-handled knives, this is not necessarily determinative of its tariff classification. *United States* v. *Ignaz Strauss & Co., Inc.*, 37 CCPA 32, 35, C.A.D. 415 (1949). *See also Hancock Gross, Inc.* v. *United States*, 73 Cust. Ct. 72, C.D. 4555, 383 F. Supp. 832 (1974), *aff'd*, 62 CCPA 100, C.A.D. 1153, 517 F. 2d 951 (1975).

Plaintiff's second witness was Mr. Ivan Szanto, the general manager of Gutman Cutlery (parent of plaintiff). Mr. Szanto testified that while he could imagine a knife with no metal whatsoever from the end of the blade to the end of the knife, such a knife would not be a quality knife (r. 65). Furthermore, he never saw a guard made out of wood, although he conceded that such a construction may not be impossible (r. 66). Finally, "the pommel is always made out of metal" (r. 67). On cross-examination though, Mr. Szanto identified high-quality knives, marked hunting knives (catalog, exhibit A), which contain wood in their handles and have no guards or pommels of metal. In another catalog exhibit (exhibit C, Gutman's own cutlery) proffered by the defendant, the witness, however, identified a knife with a stag handle which has no metal guard or pommel (r. 79). Thus, such a knife is clearly possible.

Apparently in an effort to introduce a de minimis argument, i.e., that the metal in a knife pommel and guard is de minimis when compared to the handle as a whole, Szanto testified that the guard is never more than 3 percent of the value of the knife (r. 77). Yet doubt was cast on this figure on cross-examination (r. 80).

It should be noted that nowhere in the record are any of the exhibits identified as being the same as the imported merchandise. This should have been done by plaintiff, if that is true.

The defendant's witness was Mr. R. N. Farquharson, executive vice president and chief operations officer of Case Cutlery Co. Case Cutlery manufactures pocketknives, hunting knives, scissors, and shears, and markets them around the world (r. 84). The company also has prepared knives for the military, and for the space program, (r. 85). The company has been making knives since 1947 (r. 91). Mr. Farquharson has been with Case since 1955 (r. 84). As executive vice president and chief operations officer, since 1973, Mr. Farquharson has been in charge of all the operations of the company (r. 85). Mr. Farquharson at the time of trial was president emeritus of the American Cutlery Manufacturers Association after having served 2 years as president. He has been quoted in books and articles on knives and through the years has frequently attended trade shows (r. 86).

According to this experienced witness, "[a] knife is made of two major parts, the blade and the handle. The handle is composed of an assembly, normally, of three parts: The cover material, the guard, and the bolster" (r. 87). He stated: "It's not a knife without a handle and without a blade" (r. 88). Some more of his testimony is worthwhile excerpting here:

> Q. What is the purpose of the guard?—A. It's a safety feature. As you have heard testimony earlier today, to guard the individual's hand from slipping over the cutting edge.
>
> Q. Why does a guard become necessary in a hunting knife?—A. From a safety feature, it protects the user from hurting himself.
>
> Q. Why is there more of a likelihood in a hunting knife that a person's hand would slip?—A. Well, you are gutting an animal. Your hand gets slippery and moist and you might not be able to hold the knife firmly enough, and one puts on guards to keep your hand from sliding forward, and a guard on the end of the knife to keep it from sliding off.
>
> Q. And both the back pommel and the guard serve to protect the hand?—A. Yes, that's why it's shaped that way (r. 88–89).

In other knives, where the handles are made by using washers, the pommel locks the washers in place. "(The pommel) is used to keep the whole handle tgether" (r. 89).

The defendant's position in this case is that since these elements of the handle, the guard and the pommel, are made of metal, one may not refer to the completed object as a stag-handled or wood-handled knife since important segments of them are made of metal. One of plaintiff's counterarguments is that the TSUS provision for stag-handled or wood-handled knives, under such an understanding as outlined above, would be devoid of meaning since there never

would be such an item as a completely stag-handled or wood-handled knife. Yet Mr. Farquharson's testimony belies this argument:

> Q. Was there a time historically when guards and pommels were all made from the covering material?—A. Oh, yes. They still are in some instances (r. 90).

This is even supported by one of plaintiff's witnesses. See testimony under cross-examination at pages 78–79 of the record.

The critical point of Farquharson's testimony therefore is that a knife consisting of a metal guard and pommel cannot be classified as a stag-handled or wood-handled knife even though the knife's covering is made of those materials. That is the holding of this case.

On cross-examination, Farquharson was forced to admit, repeatedly, that various catalogs identified such knives as leather-handled knives, or stag-handled knives, despite the presence of metal guards and pommels. He was able to extricate himself, on redirect examination, by pointing out that these knives were categorized according to their cover material, for ease in marketing. This was persuasive. Plaintiff's witnesses were not as effective nor as persuasive.

The case most closely on point is *United States* v. *Charberjoy Distributors, Inc.*, 59 CCPA 207, C.A.D. 1068, 465 F. 2d 922 (1972), which involved the importation of table knives from Japan. The handles of the merchandise were composed of stainless steel and plastic. The knives were classified as knives "with stainless steel handles" under TSUS item 927.53. Yet the court held that since the knife handles were composed of stainless steel and plastic, the proper classification was under TSUS item 650.21, for "other" knives.

The Court of Customs and Patent Appeals approvingly cited the Customs Court:

> With respect to identity of merchandise covered by item 927.53 classification, the evidence in this record clearly shows that the imported knives possess handles which are composed in substantial part of a nonmetallic material, a plastic. Item 927.53, the temporary provision, and items 650.09 and 650.11, the permanent provisions to which item 927.53 refers, all contain the qualifying phrase "with stainless steel handles." This latter phrase we think is incompatible with a description of a knife "with stainless steel and plastic handle"—the characterization most accurately identifying the knife handles at bar, according to the evidence. And we find nothing in the tariff schedules themselves or in the Tariff Classification Study notes (footnote omitted) which indicates that the language "with stainless steel handles" is to be given any construction other than a literal one. In fact, the juxtaposition of the language "with stainless steel handles" in part 3E of schedule 6 of the tariff schedules with coordinate provisions for knives with handles composed of other, specifically designated

> materials, indicates to the contrary. Thus, under the inferior heading "knives with their handles" there are five subdivisions of knives with handles, grouped according to the specific material of which the handle is composed, followed by a sixth or residual grouping designated only as "other." Such arrangement indicates, in our opinion, that Congress intended to classify "knives with their handles" according to the single, specific material of which the handles were composed, or if not so made, then under a residual category. (59 CCPA, pp. 210–211.)

The Court of Customs and Patent Appeals added:

> * * * Considering the phrase "a stainless steel handle" in the context of common, everyday speech, we think that a person hearing the phrase would take it to mean that the handle is composed solely of the named material except, perhaps, for insignificant or negligible quantities of other materials, and would not expect to find substantial portions of other materials. The interpretations proposed by the Government, "in chief value of" and "predominantly," admit of significant amounts of other materials and do not comport with what we agree with the Customs Court to be a "literal construction" of the phrase. * * * (59 CCPA, p. 211.)

Applying the same analysis, the knives here may not be classified as knives with stag or wood handles because of the presence of the metal pommel and guard.

A second case which supports the defendant's classification is *National Carloading Corp.* v. *United States*, 46 Cust. Ct. 1, C.D. 2224 (1961), *aff'd on rehearing*, 54 Cust. Ct. 178, C.D. 2529 (1965). According to the court, "the sole question presented for our determination is whether the length of the knives, exclusive of the handles, is under 4 inches." 46 Cust. Ct., page 2. This, in turn, raised the question of whether the knives' bolsters or guards were part of their handles.

In *National Carloading*, reliance was placed on an expert who testified: "The design of this handle ends in what we call in our trade, a bolster." He also stated that where "the blade portion ends, that is where the handle starts." Id., page 3. In addition, the court relied upon three different dictionary definitions. Judge Lawrence concluded for the court: "These definitions clearly indicate that a blade is the cutting portion of a knife, the other portion being described as the handle." Id., page 4.

Finally, plaintiff claims in the alternative that prior Customs practice existed which classified knives, such as those imported here, as wood-handled or stag-handled knives. This assertion in plaintiff's brief is offered without any support. No evidence was introduced at the trial as to earlier Customs practice. *Ditbro Pearl Co., Inc.* v. *United States*, 72 Cust. Ct. 1, 8, C.D. 4497, 393 F. Supp. 1398 (1974),

aff'd, 62 CCPA 95, C.A.D. 1152, 515 F. 2d 1157 (1975). All that exists in the record is some unsupported comments by plaintiff's counsel. Such opinions are not evidence. *Tropi-Cal* v. *United States*, 63 Cust. Ct. 518, C.D. 3945 (1969). In any case, there has been no showing of an established uniform practice within the meaning of 19 U.S.C. 1315(d).

Plaintiffs in this court bear a burden of proof to demonstrate the incorrectness of the Customs Service's classification and to establish the propriety of their asserted classification, whether primary or alternative. *United States* v. *New York Merchandise Co., Inc.*, 58 CCPA 53, C.A.D. 1004, 435 F. 2d 1315 (1970). Plaintiff has failed to meet that burden here.

Action dismissed. Judgment will be entered accordingly.

(C.D. 4833)

LOFFREDO BROS., INC., PLAINTIFF *v.* UNITED STATES, DEFENDANT

On Plaintiff's Motion and Defendant's Cross-Motion for Summary Judgment

Court No. 76-8-01789

[Plaintiff's motion denied; defendant's cross-motion granted.]

(Dated December 18, 1979)

Barnes, Richardson & Colburn (*Jacqueline Nolan-Haley* on the briefs) for the plaintiff.

Alice Daniel, Assistant Attorney General; *Joseph I. Liebman*, Attorney in Charge, Field Office for Customs Litigation (*Susan C. Cassell* on the brief), for the defendant.

MALETZ, Judge: This case which comes before the court on cross-motions for summary judgment involves the proper tariff classification of Communion pins imported from Italy in 1974 via the Port of New York. The pins were classified by the Government under item 740.38 of the Tariff Schedules of the United States, as modified by T.D. 68-9, as other jewelry and other objects of personal adornment valued over 20 cents per dozen pieces or parts and assessed duty at the rate of 27.5 percent ad valorem. Plaintiff claims that the pins are properly dutiable at the rate of 10 percent ad valorem under item 740.60, as modified by T.D. 68-9, as other religious articles of a purely devotional character designed to be worn on apparel or carried on or about or attached to the person.

The Statutes

The statutes involved are contained in schedule 7, part 6, subpart A of the tariff schedules. They are as follows:

Subpart A headnotes:

* * * * * * *

2. For the purposes of this subpart—

(a) the term "jewelry and other objects of personal adornment" * * * does not include—

* * * * * * *

(ii) religious articles of a purely devotional character * * *

Classified under:

Jewelry and other objects of personal adornment not provided for in the foregoing provisions of this part (except articles excluded by headnote 3 of this part), and parts thereof:

* * * * * * *

Valued over 20 cents per dozen pieces or parts:

* * * * * * *

740.38	Other	27.5% ad val.

Claimed under:

Religious articles of a purely devotional character designed to be worn on apparel or carried on or about or attached to the person:

* * * * * * *

Crucifixes and medals:

* * * * * * *

740.60	Other	10% ad val.

At the outset, the parties agree that no material issue of fact exists which need be resolved by trial. Instead, the parties agree that the case may be determined on the basis of the record before the court.

Against this background, plaintiff in support of its motion for summary judgment has submitted the affidavit of Frank Loffredo, the president of the plaintiff-importer, Loffredo Bros., Inc.; the affidavit of Msgr. Harry J. Byrne, pastor of St. Joseph's Church in New York City, N.Y.; copies of several pages from catalogs of companies selling religious articles; and representative samples of the imported merchandise.

Defendant in support of its cross-motion for summary judgment has submitted the affidavit of Father James O'Connor, a Roman

Catholic priest who is professor of dogmatic theology at St. Joseph's Seminary in Yonkers, N.Y., and the deposition of Msgr. Harry J. Byrne, whose affidavit, as previously indicated, was submitted by plaintiff.

Considering first the imported merchandise, it consists of two golden-colored Communion pins: Style No. 671 (pin No. 1) which is one-half inch long; and style No. 672 (pin No. 2) which is 1 inch long. These pins are described by Msgr. Byrne in his deposition as follows (pp. 9–11):

> The pin marked No. 1 represents a chalice, which is an article that is used in the Mass, the chief service in the Catholic Church, and from the top of the chalice is a round semicircle, which is obviously representing the Host, which is received in the Mass and in Holy Communion.
>
> The part that represents the Host has the letters IHS on it. These are representations of three Greek letters that indicate the name of Jesus.
>
> There's also another symbolism in these initials from the Latin and they refer to the phrase "in hoc signum," meaning "in this sign."
>
> It appears frequently on a cross or on vestments that are used at the Mass and it refers to the cross as a sign of Christian belief, and in this case, the Host, the Communion Host, is a sign of Christian belief.
>
> * * * * * * *
>
> The pin marked No. 2 is very similar to the first pin that I described. The pin marked No. 2 is also representative of a chalice, the article used in the Mass, and above the chalice appears a circle, which obviously represents the Host received in the Mass and received at Communion.
>
> At the base of the chalice is the word "sanctus," which is the Latin for "holy." Above that word is a cross.
>
> On the upper part of the chalice, there is a representation of an angel. On the part representing the Host, there is also a cross.

With regard to these imported Communion pins, it is undisputed:

1. That plaintiff sells the imported pins only to religious article stores.

2. That the pins are advertised only in religious article catalogs and only in connection with the celebration of First Holy Communion.

3. That the pins symbolize the Holy Eucharist, one of the seven sacraments of the Roman Catholic Church.

4. That the pins are given to children on the occasion of their First Holy Communion.

5. That the First Holy Communion is given to a child who has reached a level of religious maturity so that he can henceforth receive the Sacrament of the Holy Eucharist.

In this setting, the single issue is whether the imported Communion pins are "purely devotional" within the meaning of item 740.60.

On this issue we have the affidavit (presented by plaintiff) and the deposition (taken by the defendant) of Monsignor Byrne who was ordained as a Roman Catholic priest 33 years ago and is presently pastor of St. Joseph's Church in New York. He has been a monsignor—a title of honor signifying membership in the papal household—for the past 17 years. Monsignor Byrne attended Cathedral College, St. Joseph's Seminary in Yonkers and Catholic University of America, from which school he holds a doctorate in canon law. He has also held administrative positions in the New York Archdiocese.

In his affidavit, Monsignor Byrne stated that the pins have special religious significance, representing the Holy Eucharist; that their purpose is to excite pious devotion; and that they are worn as acts of devotion. Further, Monsignor Byrne testified in the course of his deposition that he considered the Communion pins to be purely devotional because they would not be worn on an occasion that was not associated in some way to the reception of the First Holy Communion. He added that a child would be inclined to wear a Communion pin to church on Sunday or when going to school for a period of a few months after receiving First Holy Communion.

With respect to the use of the Communion pins, Monsignor Byrne testified as follows (dep. pp. 13–14):

> *Q.* After the Communion ceremony, are you familiar with what happens to the pins after this particular ceremony? How they are used, if they are used?
>
> A. Yes. These pins would be worn by the children for a period of time, maybe some months after the ceremony, and then they would generally be kept with the family heirlooms. A certificate indicating that the child had received First Holy Communion on such and such a date, perhaps the armband, the ribbon that they wear on the occasion, and generally that kind of a pin would be kept by a family in a box with sort of their memorabilia from childhood.
>
> I might also add that sometimes decorative certificates are given which the families frequently frame and place in the child's room or somewhere in the house and frequently the pin will be attached to that decorative certificate.
>
> *Q.* Would you agree that these pins are commemorative in nature, to commemorate the date or the time that the child made their First Holy Communion?
>
> A. Yes, I would agree that the pins are commemorative in nature.
>
> I would add that they are more than that, in that they are a religious article that tends to inspire devotion or prayer on the part of the child who receives it.

> *Q.* Might they also be more than a religious article in that they tend to, as well as inspiring devotion, commemorate the happening of a particularly significant event?
> A. Yes.

Further, Monsignor Byrne testified that in his opinion the imported Communion pins were "purely devotional" (dep. p. 20) within the following definition of that term (dep. p. 36):

> I think something would be purely devotional that would have a primary quality of religious significance.
> It would be something that would move a believer to prayer, to meditative reflection on the mysteries of life, of creation, of where we're going, the religious dimensions of our lives.
> It would be something that would be used primarily on religious occasions.

Defendant, in addition, submitted the affidavit of Father James O'Connor, a Roman Catholic priest for the past 13 years. Father O'Connor was a parish priest at a church in the Bronx, N.Y., from 1966 to 1969. In 1969, he went to Rome where he received a degree as doctor of theology from the University of St. Thomas in 1972. For the past 8 years, Father O'Connor has been professor of dogmatic theology at St. Joseph's Seminary in Yonkers, N.Y.

In his affidavit, Father O'Connor, after indicating that he had examined the Communion pins in question, then stated:

> 6. I am very familiar with pins of this nature and know that they are given to children on the occasion of their first Holy Communion, to be worn on the clothing.
> 7. It is my opinion that although Communion pins possess a certain religious significance, they are not of a purely devotional nature, that is, they are not used solely to connote pious thoughts and aspirations and to excite one's thoughts to heavenly things.
> 8. These Communion pins are unlike rosary beads and religious medals which are purely and directly devotional.
> 9. The primary purpose of the first Communion pins is to commemorate the occasion of the child's first Holy Communion and to symbolize that the child has reached a certain level of religious maturity and can henceforth receive the Sacrament of the Eucharist.

The record is thus clear that the Communion pins have both a religious and commemorative significance. Beyond that, Monsignor Byrne was of the opinion that their religious significance is primary (dep. p. 22), while Father O'Connor was of the opinion that their primary purpose is commemorative (aff. p. 2, par. 9). In light of these considerations, we must determine whether the imported Communion pins are of a "purely devotional nature" within the meaning of item 740.60.

The question of what constitutes an article of purely devotional character was considered in *Panation Trade Co.* v. *United States*, 62 Cust. Ct. 464, C.D. 3802, 298 F. Supp. 752 (1969). There, a medal symbolically depicting the Holy Trinity on one side and the risen Christ on the other side, was held to be a religious article of a purely devotional character under the provisions of item 740.60. In reaching that conclusion, the court noted that the term devotional "is a 'religious * * * word used to connote pious thoughts and aspirations' and to excite one's thoughts to heavenly things." As relevant in this regard, the court cited the following dictionary definitions of the words "purely" and "devotional" (62 Cust. Ct. at 469):

> *Funk & Wagnalls New "Standard" Dictionary of the English Language* (1956)—
>
> *purely* adv. 1. In a pure manner. * * * (2) Completely; totally; absolutely * * * .
>
> *devotional* a. Of or pertaining to devotion; of the nature of or expressing devotion; devout.
>
> *devotional* n. 1. The state of being devoted. (1) Zealous application to any pursuit or practise, especially to religious duties; devoutness. (2) Strong attachment expressing itself in earnest service; ardor; zeal. * * * 2. An expression or act of devotedness or devoutness; especially an act of religious worship * * * .
>
> *Webster's Third New International Dictionary of the English Language* (1963)—
>
> *purely* adv: without admixture—usually used in combination with an adjective * * *.
>
> *devotional* adj: relating to, suited to, used in, or characterized by devotion (as religious devotion) * * *.

The court in *Panation* further noted that whether an article is one of religious devotion is determined largely by its nature and the subject with which it deals. 62 Cust. Ct. at 470. Tested by this standard, it must be concluded that although the subject matter of the Communion pins here involved has religious significance, the undisputed facts demonstrate that their nature and use are not purely devotional within the meaning of item 740.60.

On the contrary, it appears clear that the Communion pins at bar are commemorative in nature much in the manner of a graduation pin or ring. Thus, according to Monsignor Byrne's deposition, the pins are worn for a short period of time either to church or to school and then are usually put away in a box with other memorabilia from childhood such as the ribbon, armband, or stole worn on the occasion. Significant in this respect is the fact that sometimes the pins are

attached to the decorative certificates issued to commemorate the First Holy Communion which are framed and displayed in the house. The short of the matter is that the pins are not of a purely devotional character but rather are "really a memento of the religious event." See Monsignor Byrne deposition page 30.

In view of all the foregoing, the court holds that the plaintiff has failed to sustain its burden of establishing that the imported Communion pins are of a "purely devotional character" within the meaning of item 740.60. Accordingly, plaintiff's motion for summary judgment is denied; defendant's cross-motion for summary judgment is granted; and the action is hereby dismissed.

(C.D. 4834)

LABAY INTERNATIONAL, INC., PLAINTIFF *v.* UNITED STATES, DEFENDANT

Court No. 76-11-02561

[Judgment for defendant.]

(Decided December 21, 1979)

Givens & Deem (*Robert T. Givens* on the briefs) for the plaintiff.

Alice Daniel, Acting Assistant Attorney General; *Joseph I. Liebman*, Attorney in Charge, Field Office for Customs Litigation (*Susan Handler-Menahem* on the brief), for the defendant.

MALETZ, Judge: The only issue in this case—which has been submitted on a stipulation of facts—is whether the court has jurisdiction. Two questions are presented in this connection: (1) Whether a valid protest was filed within the 90-day period required by 19 U.S.C. 1514(b)(2); and (2) in the event a valid protest was filed within this time period, whether the action was commenced in this court within 180 days after notice of denial of such protest, as required by 28 U.S.C. 2631(a).

The case arises as follows: In April 1972, the merchandise here involved—consisting of drill pipe and equipment—was exported from Houston, Tex., to the Ivory Coast, West Africa. Thereafter, in November 1973, the merchandise was entered back into Houston without advancement in value or improvement in condition by any process of manufacture or other means while abroad. Accordingly, plaintiff claimed duty-free treatment for the merchandise under item 800.00 of the tariff schedules as American goods returned. The

claim, however, was rejected by Customs because the necessary documentation was lacking. In that circumstance, the merchandise was liquidated on October 18, 1974, under item 610.52 as iron pipe and assessed duty at the rate of 13 percent ad valorem.

On December 4, 1974, plaintiff sent a letter to the district director of Customs at Houston requesting reliquidation of the merchandise pursuant to section 520(c)(1) of the Tariff Act of 1930, as amended (19 U.S.C. 1520(c)(1)).[1] This letter read as follows:

> C.E. 03673 of November 28, 1973; Liquidated October 18, 1974; Intairdril Co.; Customs bill number 80100990.
>
> DISTRICT DIRECTOR OF CUSTOMS,
> *701 San Jacinto Street,*
> *Houston, Tex.*
>
> SIR: In connection with the above reference, please find attached the following documents:
>
> Copy of the export ocean bill of lading at Houston, Tex., executed on April 16, 1972, B/L 8 with attachments as to the items exported.
>
> Copy of the export insurance certificate No. 6894 covering the export shipment.
>
> Atwood Oceanics, Inc., export invoices Nos. 21200, 21201, 21208, 21207, covering the original exportation of this importation.
>
> Copies of the shipper's export declarations Nos. 76830, 76975, 76839, 77037.
>
> International Tool invoice.
>
> Telex of August 17, 1973.
>
> Customs form 3311 completely executed.
>
> This particular entry was placed away through error in our filing system, and only came to light upon liquidation of the entry.
>
> Under the circumstances withe [sic] documents attached and a completed Customs form 3311, we respectfully ask that the entry be reliquidated withe [sic] the cancelation [sic] of the duties assessed as provided for under section 520(c)(1), Tariff Act of 1930, as amended, as an inadvertence, and section 173.3 [sic], Customs Regulations.
>
> Respectfully,
>
> LABAY INTERNATIONAL, INC.,
> ALLEN LABAY.

This request for reliquidation was denied by Customs on December 4, 1974, the day of its receipt.

On January 17, 1975, 91 days after liquidation, plaintiff filed a protest on Customs form 19 which was denied on January 27, 1975, as untimely.

---

[1] Sec. 520(c)(1) authorizes Customs to reliquidate an entry to correct a clerical error, mistake, or fact, or other inadvertence—notwithstanding a valid protest was not filed.

On February 4, 1975, plaintiff again wrote to the district director at Houston again requesting review of the entry relying upon section 520(c)(1) and section 173.4 of the Customs Regulations because of plaintiff's inadvertence.

On March 25, 1975, the district director at Houston informed plaintiff that its request for reliquidation in its letter of December 4, 1974, was denied.

On May 9, 1975, plaintiff again filed a protest on Customs form 19 against the refusal to reliquidate under section 520(c)(1). This protest was denied on June 16, 1975.[2]

On September 23, 1976, plaintiff requested accelerated disposition of the letter filed on December 4, 1974. On October 22, 1976, the district director denied this request for accelerated disposition on the basis that he did not consider the letter of December 4, 1974, to be a protest.

On November 18, 1976, plaintiff filed summons No. 76-11-02561 in this court claiming that its alleged protest of December 4, 1974, was denied on October 23, 1976 [sic].

With these facts in mind, we consider now the first question—whether a legally sufficient protest was filed within the 90-day period required by 19 U.S.C. 1514(b)(2). As to this, plaintiff's position is that its letter of December 4, 1974, which was filed after the liquidation of the merchandise on October 18, 1974—was a valid protest. The court agrees.

At the outset, it is to be observed that "a protest is not required to be made with technical precision, but the objections must be distinct, specific, and sufficient to show that the objection made * * * was in the mind of the importer and was brought to the attention of the collector, so he might have an opportunity to correct his mistake, if any." Sturm, "A Manual of Customs Law" (1974), page 9. However cryptic, inartistic, or poorly drawn a communication may be, it is sufficient as a protest if it conveys enough information to apprise officials of the importer's intent and the relief sought. *Mattel, Inc.* v. *United States*, 72 Cust. Ct. 257, C.D. 4547, 377 F. Supp. 955 (1974). In *Mattel*, it was held that a letter requesting correction under section 520(c) of the Tariff Act of 1930, as amended, and citing a case involving similar merchandise, was sufficient to meet the protest requirements of section 514 of the Tariff Act of 1930 (19 U.S.C. 1514) since it set forth the importer's claim clearly. The reference to section 520(c) was treated as a gratuitous addition. Since the claim was made

[2] On Dec. 12, 1975, plaintiff filed a summons against the denial on June 16, 1975, of the protest of May 9, 1975. This summons was denominated Court No. 75-12-03184. However, on Sept. 9, 1977, plaintiff abandoned that action.

within the statutory period for filing protests, the court held that it had jurisdiction.

Against this background, it must be concluded that the December 4, 1974 letter was sufficient as a protest since it conveyed enough information to apprise the district director of the importer's intent and the relief sought. Thus, the letter itself and its attachments clearly indicated the entry number, the date of liquidation, the specific merchandise concerned, the dates of export of such merchandise from the Port of Houston, a request that the liquidated duties be canceled, and that plaintiff was claiming the merchandise in question consisted of American goods returned and should be classified as such under item 800.00, free of duty. The fact that the district director treated the December 4, 1974 letter as a section 520(c) request rather than as a section 514 protest is scarcely controlling for "[t]he test for determining the sufficiency of a protest under section 514 * * * is an objective one and is not dependent upon the district director's subjective reaction thereto." *Mattel, Inc.* v. *United States, supra,* 72 Cust. Ct. at 266.

In sum, it is held that the December 4, 1974 letter was a sufficient and timely protest.[3]

But even though this December 4, 1974 letter was a valid protest, the court lacks jurisdiction since the summons was filed on November 18, 1976, more than 180 days after the denial of the protest.

Plaintiff, however, contends that defendant did not provide it with a "notice of denial" as required by 28 U.S.C. 2631. The contention is without merit. The record establishes that plaintiff's request of December 4, 1974, was denied on December 4, 1974, by Customs entry aid, Denzil R. Harrelson, after consulting with his supervisor, Customs import compliance officer, Steve H. Lee, and was written directly on plaintiff's request. Further, the denial was received by plaintiff on December 4, 1974, as evidenced by the date stamp of plaintiff, Labay International, on the upper, right-hand side of the letter.

The specific denial is contained in a notation on the bottom of plaintiff's letter of December 4, 4974, and reads as follows:

> Allen [Labay]
>
> Steve and I have looked over these documents and there is not anything that we can do about reliquidating.
>
> DENNY H.

[3] At a previous stage in this litigation, defendant moved to dismiss the action for lack of jurisdiction on the sole ground that the Dec. 4, 1974 letter did not constitute a valid protest. That motion was denied.

The only requirements concerning the form of a denial of a protest are found in 19 CFR 174.29 and 174.30 (1974). 19 CFR 174.29 states in pertinent part:

> The district director shall allow or deny in whole or in part a protest filed in accordance with section 514, Tariff Act of 1930, as amended (19 U.S.C. 1514) within 2 years from the date the protest was filed. * * * If the protest is denied in whole or in part the district director shall give notice of the denial in the form and manner prescribed in section 174.30.

19 CFR 174.30 states in pertientnt part:

> (a) *Issuance of notice.*—Notice of denial of a protest shall be mailed to any person filing a protest or his agent in all cases * * * For purposes of section 515(a), Tariff Act of 1930, as amended (19 U.S.C. 1515(a)), the date appearing on such notice shall be deemed the date on which such notice was mailed.

Plaintiff does not dispute that during the period in question, Customs entry aid Harrelson and Custom import compliance officer Lee had authority to act for the district director on this matter. Therefore, since the court has held that the December 4, 1974 letter is a valid protest, it necessarily follows that the protest was denied on the same date by the notation on that letter.

There is no precise form that a denial of a protest must take. Thus in *Ogden Marine, Inc.* v. *United States*, 60 CCPA 110, C.A.D. 1090, 473 F. 2d 1405 (1973) a carbon copy of a protest was returned to the plaintiff with notations of denial thereon. The court held that this constituted a valid "notice of denial" because "(n)otice of 'denial' is all that the statute requires. Nor * * * (is) it mandatory that the form be labeled in any particular manner so long as the necessary information is unequivocally conveyed to the proper party." 60 CCPA at 112. Similarly in the present case, Customs unequivocally conveyed to plaintiff notice that the request in its December 4, 1974 letter for duty-free entry as American goods returned was denied.

What is more, even assuming contrary to the actual situation that the notation on the December 4, 1974 letter was not sufficient, certainly Customs letter of March 25, 1975, was a plain and explicit denial. For on March 25, 1975, the district director wrote plaintiff stating in part:

> 6. Your letter, received December 4, 1974, requested that the entry be reliquidated with the cancellation of the duties assessed under section 520(c)(1), Tariff Act of 1930, as an inadvertence. You attached what you described as a completed CF 3311. This

document was not acceptable. *Your request was denied.* [Italic added.]

* * * * * * *

* * * [Y]ou were notified on four separate occasions of the necessity of providing evidentiary documents in order for liquidation or reliquidation to be made under TSUS 800.00. It is the opinion of this office that the failure to file required documents whose absence was repeatedly called to your attention constitutes negligent inaction on your part.

Your unsatisfactory untimely efforts to effect correction did not contribute to a solution to this problem. It is the position of this office that relief under section 520(c)(1), Tariff Act of 1930, *cannot be granted.* [Italic added.]

The court is mindful that the summons filed in this action claims that plaintiff's protest was denied on October 23, 1976. This is presumably based on plaintiff's request of September 23, 1976, for accelerated disposition of its letter of December 4, 1974. However, this request for accelerated disposition was nothing more than a meaningless act since plaintiff's letter of December 4, 1974, had already been denied previously.

Finally, plaintiff contends that the denials of December 4, 1974, and March 25, 1975, were no more than denials of its December 4, 1974 request for reliquidation under section 520(c). But plaintiff cannot have it both ways. Plaintiff cannot contend on the one hand that the claim in its letter of December 4, 1974, was a valid protest and on the other hand argue that denial of this claim was not denial of a protest. If the letter of December 4, 1974, is to be considered a valid protest by the court (and, as previously discussed, the court so considers it), then Customs denial of the claim contained in that letter was necessarily a denial of the protest.

It is therefore held that since the summons in this action was filed November 18, 1976, more than 180 days after the denials of December 4, 1974, and March 25, 1975, the action is time-barred by 28 U.S.C. 2631 and is hereby dismissed.

Decisions of the United States Customs Court

Customs Rules Decision

(C.R.D. 79-18)

AIRCO, INC., PLAINTIFF *v.* UNITED STATES, DEFENDANT

Memorandum to Accompany Order

Court No. 76-3-00643

[Motion for substitution as party-plaintiff granted.]

(Dated December 19, 1979)

Frederick L. Ikenson for the plaintiff.
Alice Daniel, Assistant Attorney General: *David M. Cohen*, Director, Commercial Litigation Branch (*Sheila N. Ziff* on the briefs), for the defendant.

RICHARDSON, Judge: Macalloy Corp., the successor to Airco, Inc., in Charleston, S.C., seeks to be substituted as party plaintiff in the above-mentioned action. The defendant opposed the substitution, contending in substance that because the transfer documents do not recite specifically that "a chose in action" is being transferred to Macalloy Corp. it cannot be substituted for Airco, Inc., in this litigation.

It is clear from plaintiff's exhibit A, "Agreement For Purchase and Sale of Assets," and exhibit D, "Bill of Sale" of Airco, Inc.'s plant which was producing high-carbon ferrochrome at its Charleston, S.C., facility; exhibit 1, "Affidavit of Angelo N. Tarallo, Assistant Vice President of Airco, Inc."; exhibit 2, "Affidavit of Hanno D. Mott, Secretary and Director of Macalloy Corp."; and the other exhibits submitted by counsel for Airco, Inc., that the right of Macalloy Corp., to be substituted for Airco, Inc., in this action was included in the bill of sale.

The bill of sale recites "that all assets * * * whether now owned or hereafter acquired, whether tangible or intangible, * * * are sold to the purchaser." A company's claim being made in pending litigation at the time the company is sold is an intangible asset. Exhibit G to the agreement for purchase and sale specifically mentions this litigation.

Mr. Tarallo of Airco, Inc., in his affidavit, states that he was a principal negotiator and draftsman for Airco, Inc., of the agreement of sale and "that (1) it was the intent of Airco, Inc., to convey its interest, rights, and obligations in this litigation, subject to the court's approval, to Macalloy Corp. and to no one else; and (2) Airco, Inc., has not retained any ferrochrome inventory or other interest in, ferrochrome. Airco, Inc., is not at this time a manufacturer, wholesaler, or producer of ferrochrome."

Mr. MOTT of Macalloy Corp., in his affidavit, asserts that "* * * it was the clear intent of the parties that all of the assets, properties, and business of Airco's Charleston operation, whether tangible or intangible * * * were to be conveyed and transferred by Airco to Macalloy. * * * Among the assets to be transferred to Macalloy were all of Airco's rights and interest in the above-captioned litigation."

The excerpts from the above-mentioned exhibits make it clear that the documents of transfer purported to transfer and it was intent of the seller and purchaser to transfer from Airco, Inc., to Macalloy Corp. all of Airco, Inc.'s rights and interest in this litigation and that it is appropriate that Macalloy Corp. be substituted for Airco, Inc., as party plaintiff.

Decisions of the United States Customs Court

Abstracts

Abstracted Protest Decisions

DEPARTMENT OF THE TREASURY, *December 26, 1979.*

The following abstracts of decisions of the United States Customs Court at New York are published for the information and guidance of officers of the customs and others concerned. Although the decisions are not of sufficient general interest to print in full, the summary herein given will be of assistance to customs officials in easily locating cases and tracing important facts.

ROBERT E. CHASEN,
Commissioner of Customs.

DECISION NUMBER	JUDGE & DATE OF DECISION	PLAINTIFF	COURT NO.	ASSESSED	HELD	BASIS	PORT OF ENTRY AND MERCHANDISE
				Par. or Item No. and Rate	Par. or Item No. and Rate		
P79/225	Watson, J. Decided on remand of C.D. 4685 (C.A.D. 1206)	Mobay Chemical Corp. et al.	70/36742, etc.	Item 409.00 7¢ per lb. + 45%; 6.3¢ per lb. + 40%; 5.5¢ per lb. + 36%; 4.9¢	Item 405.25 2.8¢ per lb. + 18%; 2.5¢ per lb. + 16%; 2.2¢ per lb. + 14%; 1.9¢	Agreed statement of facts	New York ep White or black urethane pastes, which contain no benzenoid pigments, are products formed by condensation, polymeriza-

	December 18, 1979			per lb. + 31%; 4¢ per lb. + 27%; or 3.5¢ per lb. + 22.5% (items marked "A" and "B")	per lb. + 12.5%; 1.6¢ per lb. + 10.5%; or 1.4¢ per lb. 9% (items marked "A") Item 406.70 40%, 30%, 32%, 28%, 24% or 20% (items marked "B")		tion, or copolymerization of organic chemicals to which plasticizers, fillers, colors, or extenders have been added, and are "plastic materials" within definition of said term as provided for by headnote 3 of subpart C of part 1 of schedule 4, TSUS (items marked "A") All involved urethane pastes other than those described as "black" or "white", which are products obtained, derived, or manufactured in whole or in part from products provided for in subpart A or B of part 1 of schedule 4, TSUS, and are colors, lakes, or toners used only as coloring agents (items marked "B")

Decisions of the United States Customs Court

Abstracts

Abstracted Reappraisement Decisions

DECISION NUMBER	JUDGE & DATE OF DECISION	PLAINTIFF	COURT NO.	BASIS OF VALUATION	HELD VALUE	BASIS	PORT OF ENTRY AND MERCHANDISE
R79/264	Re, C. J. December 18, 1979	Belcrest Linens, Inc.	76-11-02432, etc.	Constructed value	Invoice unit values plus an additional 5% of costs for materials and for shipping materials from place of manufacture of materials to place of manufacture of finished imported product (Hong Kong)	Agreed statement of facts	New York Dry goods
R79/265	Newman, J. December 18, 1979	Yoshida International, Inc. YKK Zipper (USA), Inc., et al.	73-8-02132, etc.	Constructed value (if exported from Japan prior to 2/1/72) United States value (if exported on or after 2/1/72)	Equal to invoiced unit prices plus 8.5%, net, packed Equal to invoiced unit prices, net, packed	Agreed statement of facts	New York Zippers and/or zipper parts, classified under item 745.70, 745.72 or 745.74

International Trade Commission Notices

Investigations by the U.S. International Trade Commission

DEPARTMENT OF THE TREASURY

The appended notices relating to investigations by the U.S. International Trade Commission are published for the information of Customs officers and others concerned.

R. E. CHASEN,
Commissioner of Customs.

(TA-503(a)-6 and 332-107)

President's List of Articles Which May Be Designated as Eligible Articles for Purposes of the Generalized System of Preferences

AGENCY: U.S. International Trade Commission.

ACTION: In accordance with the provisions of sections 503(a) and 131(b) of the Trade Act of 1974 (hereinafter referred to as the act) and section 332(g) of the Tariff Act of 1930, as amended, the Commission has instituted investigation TA-503(a)-6 and 332-107 for the purpose of obtaining, to the extent practicable, information of the kind described in section 131(d) of the act. This information is for use in connection with the preparation of advice requested by the Special Representative for Trade Negotiations (STR) with respect to certain listed articles as to the probable economic effects on U.S. industries producing like or directly competitive articles and on consumers of the elimination of U.S. import duties under the U.S. Generalized System of Preferences (GSP).

EFFECTIVE DATE: December 20, 1979.

FOR FURTHER INFORMATION CONTACT: (1) Agricultural products, Mr. Ed Furlow, 202-523-0234; (2) textile products, Mr.

Reuben Schwartz, 202-523-0114; (3) chemical products, Dr. Aimison Jonnard, 202-523-0423; (4) metals and metal products, Mr. William Wright, 202-523-0275, Office of Industries, U.S. International Trade Commission, 701 E Street NW., Washington, D.C. 20436; (5) legal aspects, Terry K. Smith, Esq., 202-523-0311, Office of General Counsel, at the same address.

SUPPLEMENTARY INFORMATION: On December 7, 1979, in accordance with sections 503(a) and 131(a) of the act and pursuant to the authority of the President delegated to the STR by Executive Order 11846, as amended by Executive Order 11947, the STR furnished the U.S. International Trade Commission the attached list of articles which are being considered for designation as eligible articles for purposes of the GSP set forth in title V of the act.

Specifically, the STR has requested that the Commission provide its advice, with respect to each listed article, as to the probable economic effects on U.S. industries producing like or directly competitive articles and on consumers of the elimination of the U.S. import duties under the GSP.

In providing its advice, the STR requested the Commission to assume that benefits of the GSP would not apply to imports that would be excluded from receiving such benefits by virtue of the "competitive-need" limitations specified in section 504(c) of the act.

Section 504(d) of the act exempts from one of the competitive-need limits in section 504(c) articles for which no like or directly competitive article was being produced in the United States on the date of enactment of the act. Accordingly, pursuant to the authority of section 332(g) of the Tariff Act of 1930, as amended (19 U.S.C. 1332(g)), and in conformity with the delegation of authority from the President to him of Executive Order 11846 as amended by Executive Order 11947, the STR requested that the Commission also provide advice with respect to whether products like or directly competitive with any products described in the attached tariff categories were being produced in the United States on January 3, 1975.

Public hearing.—A public hearing in connection with the investigation will be held in the Commission hearing room, 701 E Street NW., Washington, D.C. 20436, beginning at 10 a.m., e.s.t., on January 24, 1980. All persons shall have the right to appear by counsel or in person, to present information, and to be heard. Requests to appear at the public hearing should be filed with the Secretary, U.S. International

Trade Commission, 701 E Street NW., Washington, D.C. 20436, not later than noon, January 18, 1980.

Written submissions.—In lieu of or in addition to appearances at the public hearing, interested persons are invited to submit written statements concerning the investigation. Commercial or financial information which a submitter desires the Commission to treat as confidential must be submitted on separate sheets of paper, each clearly marked "Confidential Business Information" at the top. All submissions requesting confidential treatment must conform with the requirements of section 201.6 of the Commission's Rules of Practice and Procedure (19 CFR 201.6). All written submissions, except for confidential business information, will be made available for inspection by interested persons. To be insured of consideration by the Commission, written statements should be submitted at the earliest practicable date, but no later than February 6, 1980. All submissions should be addressed to the Secretary at the Commission's office in Washington, D.C.

By order of the Commission.

Issued: December 21, 1979.

KENNETH R. MASON,
Secretary.

Attachment.

ARTICLES BEING CONSIDERED FOR DESIGNATION AS ELIGIBLE ARTICLES FOR PURPOSES OF THE GENERALIZED SYSTEM OF PREFERENCES

TSUS or TSUSA item	Article
	[The bracketed language in this list has been included only to clarify the scope of the numbered items which are being considered, and such language is not itself intended to describe articles which are under consideration]
130.45	Oats, hulled or not hulled
	Vegetables (whether or not reduced in size), packed in salt, in brine, pickled, or otherwise prepared or preserved (except vegetables in schedule 1, part 8, subpart B of the Tariff Schedules of the United States Annotated):
	[Beans; cabbage; chickpeas or garbanzos; black-eye cowpeas; onions; peas; pimientos; tomatoes; waterchestnuts]
	Other:
	[Packed in salt, in brine, or pickled]
	Other:
	[Palm hearts]
	Other:
	[Frozen]
	Other:
	[Artichokes; asparagus; potatoes, dehydrated]

ARTICLES BEING CONSIDERED FOR DESIGNATION AS ELIGIBLE ARTICLES FOR PURPOSES OF THE GENERALIZED SYSTEM OF PREFERENCES—Continued

TSUS or TSUSA item	Article
141.8180 [1]	Other
or	or
141.8180 pt.	Tender cactus
or	or
141.8180 pt.	Pre-cooked rice
	Berries, fresh, or prepared or preserved:
	[Fresh or in brine; dried]
	Otherwise prepared or preserved:
	[Blueberries; black currants, gooseberries, lingon or partridge berries, and loganberries]
	Other berries:
	Frozen:
	[Strawberries]
146.7550 [1]	Other
or	or
146.7550 pt.	Blackberries
	Grapes, fresh, or prepared or preserved:
	[Fresh (in bulk, or in crates, barrels or other packages); dried]
147.77	Otherwise prepared or preserved
or	or
147.77 pt.	Grape must
	Olives, fresh, or prepared or preserved:
	[Fresh]
	In brine, whether or not pitted or stuffed:
	Not ripe and not pitted or stuffed:
	[Not green in color and not packed in airtight containers of glass, metal, or glass and metal]
148.44	Other
148.50	Pitted or stuffed
	[Dried]
148.56	Otherwise prepared or preserved
	Papayas, fresh, or prepared or preserved:
148.60	Fresh
	Wrapper tobacco (whether or not mixed or packed with filler tobacco):
170.10	Not stemmed
170.15	Stemmed
170.65	Cigarettes
or	or
170.65 pt.	Bidis
	Cigars and cheroots:
170.66	Cigars each valued 15 cents or over
175.36	Poppy seed
	Yarns of wool or hair:
	[Yarns of wool, colored, and cut into uniform lengths of not over 3 inches, in immediate packages or containers not over 6 ounces in weight including the weight of the immediate package or container]
	Other:
	[Of angora rabbit hair]
307.64	Other
or	or
307.64 pt.	Yarns, handspun and handdyed
	Cordage:
	Of vegetable fibers:
	Of jute:
	Not bleached, not colored, and not treated:

Note.—See footnotes at end of table.

ARTICLES BEING CONSIDERED FOR DESIGNATION AS ELIGIBLE ARTICLES FOR PURPOSES OF THE GENERALIZED SYSTEM OF PREFERENCES—Continued

TSUS or TSUSA item	Article
315.80	The singles yarn of which measures under 720 yards per pound
315.85	The singles yarn of which measures 720 yards or over per pound
	Bleached, colored, or treated:
315.90	The singles yarn of which measures under 720 yards per pound
315.95	The singles yarn of which measures 720 yards or over per pound
	Woven fabrics, of silk:
	Wholly of silk:
	Jacquard-figured:
337.40	Degummed, bleached, or colored
	Woven or knit fabrics (except pile or tufted fabrics), of textile materials, coated or filled with rubber or plastics material, or laminated with sheet rubber or plastics:
	Of man-made fibers:
355.81	Over 70 percent by weight of rubber or plastics
	Floor coverings of pile or tufted construction, of textile materials:
	In which the pile was inserted or knotted during weaving or knitting:
	With pile hand-inserted or hand-knotted:
	[With over 50 percent by weight of the pile being hair of the alpaca, guanaco, huarizo, llama, misti, suri, or any combination of these hairs]
	Other:
360.15	Valued over 66⅔ cents per square foot
	Floor coverings not specially provided for, of textile materials:
	Of wool:
	Woven, but not made on a power-driven loom:
361.44	Valued over 30 cents per square foot
	Tapestries, including hand-worked petit-point and other needle-point tapestries, all the foregoing of textile materials:
	[Gobelin and other hand-woven tapestries fit only for use as wall hangings, and valued over $20 per square foot]
	Other:
	Of wool:
364.22	Valued over $2 per pound
or	or
364.22 pt.	Hand-woven mohair tapestries
	Bags and sacks, or other shipping containers, of textile materials:
	Of vegetable fibers, except cotton:
385.45	Not bleached, not colored, and not rendered nonflammable
	Articles not specially provided for, of textile materials:
	[Lace or net articles, whether or not ornamented, and other articles ornamented]
	Other articles, not ornamented:
	Of man-made fibers:
	[Knit (except pile or tufted construction); pile or tufted construction]
	Other:
	[Artificial flowers]
	Other:
	[Tents and tarpaulins; shoe uppers; inked ribbons]
389.6260	Other
or	or
389.6260 pt.	Nylon sleeping bags
	Alcohols, monohydric, unsubstituted:
427.88	Ethyl for nonbeverage purposes
	Pipes and tubes and blanks therefor, all the foregoing of iron (except cast iron) or steel:
	Welded, jointed, or seamed, with walls not thinner than 0.065 inch, and of circular cross section:
	Other than alloy iron or steel:
	0.375 inch or more in outside diameter:
	[Suitable for use in boilers, superheaters, heat exchangers, condensers and feedwater heaters]

Pages 42 and

1 43 missing

In the Matter of CERTAIN ROTARY SCRAPING TOOLS	Investigation No. 337-TA-62

Notice of the Commission Procedure on the Presiding Officer's Recommended Determinations and Relief, Bonding, and the Public Interest, and of the Schedule for Filing Written Submissions

RECOMMENDATIONS OF VIOLATION ISSUED

In connection with this investigation by the U.S. International Trade Commission under section 337 of the Tariff Act of 1930, as amended (19 U.S.C. 1337), of alleged unfair methods of competition and unfair acts in the importation of certain rotary scraping tools into the United States, or in their sale, and by reason of misleading packaging and/or deceptive advertising of the imported rotary scraping tools, including the simulation of complainant's trade dress, the presiding officer recommended on July 25, 1979, that the Commission—

(1) Grant a joint motion for summary determination as to six of the seven named respondents;

(2) Determine that there is a violation of section 337 as to these respondents; and

(3) Determine that there is no violation as to one respondent, Caprice Products.

The presiding officer further recommended on September 18, 1979, that the Commission—

(1) Grant a second joint motion for summary determination as to twenty additional named respondents; and

(2) Determine that there is a violation of section 337 as to these respondents.

The presiding officer certified to the Commission for its consideration two joint motions, motions Nos. 62-5 and 62-6, and the supporting papers submitted therewith. Interested persons may obtain copies of the presiding officer's recommended determinations of July 25, 1979, and September 18, 1979 (and all other public documents), by contacting the office of the Secretary to the Commission, 701 E Streeet NW., Washington, D.C. 20436; telephone 202-523-0161.

REQUESTS FOR ORAL ARGUMENT AND ORAL PRESENTATION

At present, no oral argument is planned with respect to the recommended determinations of the presiding officer. Similarly, no oral presentation is planned with respect to the subject matter of section 210.14(a) of the Commission's Rules of Practice and Procedure (19 CFR 210.14(a)) concerning relief, bonding, and the public-interest

factors set forth in subsections (d), (f), and (g)(3) of section 337 of the Tariff Act of 1930, as amended, which the Commission is to consider if it determines that there should be relief. However, the Commission will consider written requests for an oral argument or an oral presentation if they are received by the Secretary to the Commission no later than the close of business (5:15 p.m., e.d.t.), on January 2, 1980.

WRITTEN SUBMISSIONS TO THE COMMISSION

The Commission requests that written submissions of three types be filed no later than the close of business on January 2, 1980.

1. *Briefs on the presiding officer's recommended determination.*—Parties to the Commission's investigation, interested agencies, and the Commission investigative staff are encouraged to file briefs concerning exceptions to the presiding officer's recommended determination. Briefs must be served on all parties of record to the Commission's investigation on or before the date they are filed with the Secretary. Statements made in briefs should be supported by reference to the record. Persons with the same positions are encouraged to consolidate their briefs, if possible.

2. *Written comments and information concerning relief, bonding, and the public interest.*—Parties to the Commission's investigation, interested agencies, public-interest groups, and any other interested members of the public are encouraged to file written comments and information concerning relief, bonding, and the public interest. These submissions should include a proposed remedy, a proposed determination of bonding, and a discussion of the effect of the proposals on the public health and welfare, competitive conditions in the U.S. economy, the production of like or directly competitive articles in the United States, and U.S. consumers. These written submissions will be very useful to the Commission if it determines that there is a violation of section 337 and that relief should be granted.

3. *Requests for oral argument and oral presentation.*—Written requests that the Commission hold oral argument and/or oral presentation must be filed with the Secretary to the Commission as described above.

ADDITIONAL INFORMATION

The original and 19 true copies of all briefs, written comments, and any written request must be filed with the Secretary to the Commission.

Any person desiring to submit a document (or a portion thereof) to the Commission in confidence must request in camera treatment. Such request should be directed to the Chairman of the Commission and must include a full statement of the reasons why the Commission

should grant such treatment. The Commission will either accept such submission in confidence or return it. All nonconfidential written submissions will be open to public inspection at the Secretary's Office.

Notice of the Commission's investigation was published in the Federal Register of January 10, 1979 (44 F.R. 2207); notice of the Commission's amendment to the supplemented complaint and notice of investigation was published in the Federal Register of July 18, 1979 (44 F.R. 41972).

By order of the Commission.

Issued: December 19, 1979.

KENNETH R. MASON.
Secretary.

In the Matter of CERTAIN FOOD SLICERS	Investigation No. 337-TA-76

Notice of Change of Commission Investigative Attorney

Donald R. Dinan is designated Commission investigative attorney for investigation No. 337-TA-76, "Certain Food Slicers," replacing JoAnn Miles. The service of all papers on the Commission investigative attorney should henceforth be served upon Mr. Dinan, effective Wednesday, December 26, 1979.

The Secretary is requested to publish this notice in the Federal Register.

Dated: December 20, 1979.

EARL LEVY,
Deputy Director,
Office of Legal Services.

Index

Customs Service

Treasury decisions: T.D. No.
Entry of merchandise—Customs Regulations amended 80-10
Part 159—Liquidation of duties—ferroalloys from Spain 80-11
Water-circulation pumps from the United Kingdom 80-12
Part 159—Liquidation of duties—Nonrubber footwear, certain caster-oil products, scissors and shears, cotton yarn from Brazil 80-13

Customs Court

Action dismissed, C.D. 4834
American goods returned, C.D. 4834
Application for substitution of party-plaintiff granted; memorandum to accompany order, C.R.D. 79-18
Article of purely devotional character, C.D. 4833
Burden of proof; classification, C.D. 4832
Classification:
Burden of proof, C.D. 4832
Hunting knives with metal pommels and metal guards, C.D. 4832
Trade meaning, C.D. 4832
Communion pins; jewelry and other objects of personal adornment, other, C.D. 4833
Construction:
Code of Federal Regulations (1974), title 19:
Sec. 174.29, C.D. 4834
Sec. 174.30, C.D. 4834
Customs Regulations, sec. 173.4, C.D. 4834
Tariff Act of 1930:
Par. 520(c), C.D. 4834
Par. 520(c)(1), C.D. 4834
Tariff Schedules of the United States:
Item 610.52, C.D. 4834
Item 650.13, C.D. 4832
Item 650.19, C.D. 4832
Item 650.21, C.D. 4832
Item 740.38, C.D. 4833
Item 740.60, C.D. 4833
Item 800.00, C.D. 4834
Schedule 6, part 7, subpart A, C.D. 4833

Construction—Continued
U.S. Code:
Title 19:
Sec. 1315(d), C.D. 4832
Sec. 1514(b)(2), C.D. 4834
Sec. 1520(c)(1), C.D. 4834
Title 28:
Sec. 2631, C.D. 4834
Sec. 2631(a), C.D. 4834
Counsel, statement of; evidentiary value, C.D. 4832
Cross-motions for summary judgment, C.D. 4833
Definitions:
Devotional, C.D. 4833
Handle, C.D. 4832
Purely, C.D. 4833
Purely devotional, C.D. 4833
Denial of protest, form of; notice of denial, C.D. 4834
Dismissal of action; lack of jurisdiction, C.D. 4834
Evidentiary value:
Counsel, statement of, C.D. 4832
Statements of counsel, C.D. 4832
Hunting knives:
Knives, other: other, C.D. 4832
With metal pommels and metal guards; classification, C.D. 4833
Iron pipe, C.D. 4834
Jewelry and other objects of personal adornment, other; communion pins, C.D. 4833
Jurisdiction, lack of, C.D. 4834
Knives:
Other: other; hunting knives, C.D. 4832
With stag:
Handles, C.D. 4832
Horn or wood in the handles, C.D. 4832
With wood handles, C.D. 4832
Lack of jurisdiction; dismissal of action, C.D. 4834
Lexicographic sources:
Funk & Wagnalls New "Standard" Dictionary of the English Language (1956), C.D. 4833
Webster's Third New International Dictionary of the English Language (1963), C.D. 4833
Webster's Seventh New Collegiate Dictionary, C.D. 4832
Memorandum to accompany order; application for substitution of party-plaintiff granted, C.R.D. 79-18
Notice of denial; denial of protest, form of, C.D. 4834
Party-plaintiff, substitution; substitution as party-plaintiff, C.R.D. 79-18
Protest, sufficient and timely, C.D. 4834
Purely devotional character, C.D. 4833
Religious articles of a purely devotional character designed to be worn on apparel or carried on or about or attached to the person, other, C.D. 4833
Statements of counsel; evidentiary value, C.D. 4832
Substitution as party-plaintiff; party-plaintiff, substitution, C.R.D. 79-18
Summary judgment, cross-motions for, C.D. 4833

Summons, untimely filed, C.D. 4834
Trade meaning; classification, C.D. 4832
Treatises and related publications; Sturm, *A Manual of Customs Law* (1974), p. 9, C.D. 4834
Untimely filed summons, C.D. 4834
Words and phrases:
    Devotional, C.D. 4833
    Handle, C.D. 4832
    Purely, C.D. 4833
    Purely devotional, C.D. 4833

JF 307-4/65 Item 950-D T1.11/3:14/4
JAN 2 4 1980
contin

Customs Bulletin

C - 350

Regulations, Rulings, Decisions, and Notices concerning Customs and related matters

and Decisions

of the United States Court of Customs and Patent Appeals and the United States Customs Court

9247

Vol. 14 JANUARY 23, 1980 No. 4

This issue contains

T.D. 80-14 through 80-19
General Notice
Protest abstracts P79/226
Reap. abstracts R79/266
International Trade Commission Notice

THE DEPARTMENT OF THE TREASURY
U.S. Customs Service

NOTICE

The abstracts, rulings, and notices which are issued weekly by the U.S. Customs Service are subject to correction for typographical or other printing errors. Users may notify the U.S. Customs Service, Logistics Management Division, Washington, D.C. 20229, of any such errors in order that corrections may be made before the bound volumes are published.

For sale by the Superintendent of Documents, U.S. Government Printing Office, Washington, D.C. 20402. Price: $1.30 (single copy domestic); $1.65 (single copy foreign). Subscription price: $65.00 a year domestic; $81.25 a year foreign.

U.S. Customs Service

Treasury Decisions

(T.D. 80–14)

Foreign Currencies—Daily Rates for Countries Not on Quarterly List

Rates of exchange based on rates certified to the Secretary of the Treasury by the Federal Reserve Bank of New York for the Brazil cruzeiro, People's Republic of China yuan, Hong Kong dollar, Iran rial, Philippines peso, Singapore dollar, Thailand baht (tical) and Venezuela bolivar

The Federal Reserve Bank of New York, pursuant to section 522(c), Tariff Act of 1930, as amended (31 U.S.C. 372(c)), has certified buying rates for the dates and foreign currencies shown below. The rates of exchange, based on these buying rates, are published for the information and use of Customs officers and others concerned pursuant to part 159, subpart C, Customs Regulations (19 CFR 159, subpart C).

Brazil cruzeiro:	
December 10–14, 1979	$0.0235
People's Republic of China yuan:	
December 10, 1979	$0.656728
December 11, 1979	.660022
December 12–14, 1979	.663350
Hong Kong dollar:	
December 10, 1979	$0.201329
December 11, 1979	.201613
December 12, 1979	.201410
December 13, 1979	.201471
December 14, 1979	.202000
Iran rial:	
December 10–14, 1979	Not available
Philippines peso:	
December 10–14, 1979	$0.1350
Singapore dollar:	
December 10, 1979	$0.459770

December 11, 1979	.460829
December 12, 1979	.460617
December 13, 1979	.461681
December 14, 1979	.462535
Thailand baht (tical):	
December 10–14, 1979	$0.0495
Venezuela bolivar:	
December 10–14, 1979	$0.2329

(LIQ-3-TRODE)

Dated: December 27, 1979.

WILLIAM J. WAGNER III
(For G. Scott Shreve, Acting
Director, Duty Assessment Division).

(T.D. 80-15)

Foreign Currencies—Variances From Quarterly Rate

Rates of exchange based upon rates certified to the Secretary of the Treasury by the Federal Reserve Bank of New York

The following rates of exchange are based upon rates certified to the Secretary of the Treasury by the Federal Reserve Bank of New York, pursuant to section 522(c), Tariff Act of 1930, as amended (31 U.S.C. 372(c)), and reflect variances of 5 per centum or more from the quarterly rate published in T.D. 79-264 for the following countries. Therefore, as to entries covering merchandise exported on the dates listed, whenever it is necessary for Customs purposes to convert such currency into currency of the United States, conversion shall be at the following rates:

Denmark krone:	
December 10, 1979	$0.184502
December 11, 1979	.185529
December 12, 1979	.185426
December 13, 1979	.186289
December 14, 1979	.185563
Japan yen:	
December 12, 1979	$0.004203
December 13, 1979	.004155
December 14, 1979	.004123

(LIQ-3-TRODE)

Dated: December 27, 1979.

WILLIAM J. WAGNER III
(For G. Scott Shreve, Acting
Director, Duty Assessment Division).

(T.D. 80-16)

Foreign Currencies—Daily Rates for Countries Not on Quarterly List

Rates of exchange based on rates certified to the Secretary of the Treasury by the Federal Reserve Bank of New York for the Brazil cruziero, People's Republic of China yuan, Hong Kong dollar, Iran rial, Philippines peso, Singapore dollar, Thailand baht (tical) and Venezuela bolivar

The Federal Reserve Bank of New York, pursuant to section 522(c), Tariff Act of 1930, as amended (31 U.S.C. 372(c)), has certified buying rates for the dates and foreign currencies shown below. The rates of exchange, based on these buying rates, are published for the information and use of Customs officers and others concerned pursuant to part 159, subpart C, Customs Regulations (19 CFR 159, subpart C).

Brazil cruziero:	
December 17–21, 1979	$0.0235
People's Republic of China yuan:	
December 17–21, 1979	$0.663350
Hong Kong dollar:	
December 17, 1979	$0.202429
December 18, 1979	.203874
December 19, 1979	.204248
December 20, 1979	.203957
December 21, 1979	.203666
Iran rial:	
December 17–21, 1979	Not available
Philippines peso:	
December 17–21, 1979	$0.1350
Singapore dollar:	
December 17, 1979	$0.459559
December 18, 1979	.458295
December 19, 1979	.460193
December 20, 1979	.460405
December 21, 1979	.460299
Thailand baht (tical):	
December 17–21, 1979	$0.0495
Venezuela bolivar:	
December 17–21, 1979	$0.2329

(LIQ-3-TRODE)

Dated: January 2, 1980.

H. C. JEESE
(For G. Scott Shreve, Acting
Director, Duty Assessment Division).

(T.D. 80-17)

Foreign Currencies—Variances From Quarterly Rate

Rates of exchange based upon rates certified to the Secretary of the Treasury by the Federal Reserve Bank of New York

The following rates of exchange are based upon rates certified to the Secretary of the Treasury by the Federal Reserve Bank of New York, pursuant to section 522(c), Tariff Act of 1930, as amended (31 U.S.C. 372(c)), and reflect variances of 5 per centum or more from the quarterly rate published in T.D. 79-264 for the following countries. Therefore, as to entries covering merchandise exported on the dates listed, whenever it is necessary for Customs purposes to convert such currency into currency of the United States, conversion shall be at the following rates:

Denmark krone:	
December 17, 1979	$0.185822
December 18, 1979	.186324
December 19, 1979	(*)
December 20, 1979	.185822
December 21, 1979	.185787
Japan yen:	
December 17, 1979	$0.004165
December 18, 1979	.004177
December 19, 1979	.004184
December 20, 1979	(*)
December 21, 1979	.004168

* Rate did not vary this date. Use quarterly rate.

(LIQ-3-TRODE)

Dated: January 2, 1980.

H. C. JEESE
(For G. Scott Shreve, Acting
Director, Duty Assessment Division).

(T.D. 80-18)

TITLE 1—U.S. CUSTOMS DUTIES

CHAPTER 1—U.S. CUSTOMS SERVICE, DEPARTMENT OF THE TREASURY

PART 153—ANTIDUMPING

Potassium Chloride, Otherwise Known as Muriate of Potash, From Canada

Antidumping: Notice of modification or revocation of dumping finding

AGENCY: U.S. Treasury Department.

ACTION: Modification of dumping finding.

SUMMARY: This notice is to inform the public that the Potash Corp. of Saskatchewan (PCS) has provided assurances that it will not sell potassium chloride below fair value within the meaning of the Antidumping Act, 1921, as amended. Since PCS has acquired assets from several Canadian companies which produce potassium chloride, but which were previously excluded from the dumping finding, notice is hereby given of the modification of the finding to exclude PCS. As a result of this action, potassium chloride from PCS entered, or withdrawn from warehouse, for consumption will not be liable for dumping duties.

EFFECTIVE DATE: (Date of publication in the Federal Register.)

FOR FURTHER INFORMATION CONTACT: Office of the Assistant Secretary for Trade Administration, Robert Robeson, Office of Policy, U.S. Department of Commerce, 14th and Constitution Avenue NW., Washington, D.C. 20230; telephone 202-566-2323.

SUPPLEMENTARY INFORMATION: On December 19, 1969, a finding of dumping with respect to potassium chloride from Canada, T.D. 69-265, was published in the Federal Register (34 F.R. 19904). Excluded from the finding at that time was the U.S. Borax & Chemical Co., Kalium, Saskatchewan. Subsequently, certain other Canadian producers or exporters have also been excluded from the finding. These firms are: Potash Co. of Canada; Hudson Bay Mining & Smelting Co., Ltd.; Swift Co., Ltd; Amax Potash, Ltd; and Duval Corp. of Canada. Those exclusions were based upon determinations that these companies were not selling, nor were likely to sell, potassium chloride at less than fair value within the meaning of the Antidumping Act of 1921, as amended (19 U.S.C. 160 et seq.) (the act).

The Potash Corp. of Saskatchewan, which previously was not engaged in the production or sale of potassium chloride, has acquired assets in the firms listed above. The Department has concluded that where a foreign manufacturer, producer or exporter not previously engaged in the manufacture, production or sale of merchandise subject to a finding of dumping, acquires assets in one or more firms excluded from that finding, such manufacturer, producer, or exporter shall become eligible for exclusion from the finding upon receipt of assurances that no future sales to the United States will be made at less than fair value within the meaning of the act. Such assurances have been received from PCS.

Because of the unusual circumstances of this case, it is appropriate to modify this finding pursuant to section 153.44(e), Customs Regulations (19 CFR 153.44(e)). Under this provision, the Secretary may modify or revoke a dumping finding without publishing the "Notice

of Tentative Determination to Modify or Revoke Dumping Finding" required pursuant to section 153.44(c), Customs Regulations (1 9CFR 153.44(c)).

For the reasons stated above, I hereby determine that potassium chloride, otherwise known as muriate of potash from Canada, produced and sold by Potash Corp. of Saskatchewan is not being, nor is likely to be, sold at less than fair value within the meaning of the act.

Accordingly, section 153.46, Customs Regulations (19 CFR 153.46), is amended to exclude potassium chloride, otherwise known as muriate of potash, from Canada, produced and sold by Potash Corp. of Saskatchewan, from T.D. 69-265, as modified by T.D. 74-157 and T.D. 76-219. The current entry for potassium chloride, otherwise known as muriate of potash, from Canada should be deleted and replaced by the following entry:

Merchandise	Country	T.D.	Modified by
Potassium chloride, otherwise known as muriate of potash, except that produced and sold by U.S. Borax Chemical Co., Kalium, Saskatchewan, Canada; Kalium Chemicals, Ltd., Regina, Saskatchewan, Canada; Potash Co. of Canada, Ltd., Lanigan, Saskatchewan, Canada; Potash Co. of America, Saskatoon, Saskatchewan, Canada; International Minerals and Chemical Corp., Libertyville, Ill., U.S.A.; and CF Industries, Inc., Chicago, Ill., U.S.A.; Brockville Chemical Industries, Ltd., Montreal, Quebec, Canada; Hudson Bay Mining & Smelting Co., Ltd., Toronto, Ontario, Canada; Swift Canadian Co., Ltd., Etobicoke, Ontario, Canada; and Cominco, Ltd., Vancouver, British Columbia, Canada; Potash Corporation of Saskatchewan.	Canada	69-265	74-157 76-219 80-16

(Secs. 201, 407; 42 Stat. 11, as amended, 18; 19 U.S.C. 160, 173.)

This notice is published pursuant to section 153.44(c), Customs Regulations (19 C.F.R. 153.44(c)).

JORDON LUKE,
Acting General Counsel of the Treasury.

[Published in the Federal Register Jan. 7, 1980 (44 F.R. 1417)]

(T.D. 80-19)

Synposes of Drawback Decisions

The following are synopses of drawback rates issued April 23, 1979, and May 4, 1979, pursuant to sections 22.1 and 22.5, inclusive, Customs Regulations.

In the synopses below are listed, for each drawback rate approved under section 1313(g), the name of the company, the specified articles

on which drawback is authorized, the merchandise which will be used to manufacture or produce these articles, the factories where the work will be accomplished, the date the statement was signed, the basis for determining payment, the Regional Commissioner to whom the rate was forwarded, and the date on which it was forwarded.

Dated: December 19, 1979.

HARVEY B. FOX,
(For Donald W. Lewis, Director,
Office of Regulations and Rulings).

(A) Company: Ayres Corp.
Aircraft: Agricultural aircraft.
Merchandise: Pratt & Whitney turbo engines, Pezetel radial engines, and Dowty Rotol propellers.
Factory: Albany, Ga.
Statement signed: February 7, 1979.
Basis of claim: Appearing in.
Rate forwarded to Regional Commissioner of Customs: Miami, May 4, 1979.

(B) Company: Bender Welding & Machine Co., Inc.
Vessels: Seiner-type fishing vessels.
Merchandise: Ice elevators, Simrad sonar scopes, Simrad sonars.
Shipyard: Mobile, Ala.
Statement signed: March 14, 1979.
Basis of claim: Appearing in.
Rate forwarded to Regional Commissioner of Customs: New Orleans, April 23, 1979.

307-465—80——2

U.S. Customs Service

General Notice

(19 CFR Parts 6 and 10)

Civil Aircraft Agreement

AGENCY: U.S. Customs Service, Department of the Treasury.

ACTION: Proposed rule.

SUMMARY: Title VI of Public Law 96–39, the "Trade Agreements Act of 1979," implements the tariff changes necessitated by the "Agreement on Trade in Civil Aircraft" negotiated by the United States in the Tokyo Round of Multilateral Trade Negotiations. This document proposes to amend the Customs Regulations to enable Customs to implement the provisions of title VI.

The significant proposed changes to the regulations are:

1. To eliminate duties on civil aircraft and aircraft parts certified for use in civil aircraft which are specially provided for in the Tariff Schedules of the United States and admitted into the United States from a nation entitled to most-favored-nation tariff treatment.

2. To eliminate duties on the cost of repair parts, materials, or expenses of repairs in a foreign country upon a U.S. civil aircraft.

DATE: Comments must be received on or before (60 days after publication in the Federal Register).

ADDRESS: Written comments should be addressed to the Commissioner of Customs, attention: Regulations and Research Division, U.S. Customs Service, 1301 Constitution Avenue NW., room 2335, Washington, D.C. 20229.

FOR FURTHER INFORMATION CONTACT the following individuals at the U.S. Customs Service, Office of Regulations and Rulings, 1301 Constitution Avenue NW., Washington, D.C. 20229: Aircraft repair matters: John A. Mathis, Carriers, Drawback and Bonds Division (202–566–5706); classification matters: L. J. Emmert, Classification and Value Division (202–566–8181); certification matters: Benjamin H. Mahoney, Entry Procedures and Penalties Division (202–566–5765).

SUPPLEMENTARY INFORMATION:

BACKGROUND

Public Law 96–39, the "Trade Agreements Act of 1979," approved July 26, 1979 (the "act"), implements the trade agreements negotiated by the United States in the Tokyo Round of Multilateral Trade Negotiations (MTN).

One agreement, the "Agreement on Trade in Civil Aircraft" (the "agreement"), establishes a framework of rules for duty-free trade in civil aircraft and parts for civil aircraft. Tariff and nontariff measures are covered in the agreement to address problems peculiar to the civil aircraft sector of the aerospace industry. The special focus and broad scope of the agreement distinguishes it from most of the other agreements.

In the area of tariffs, the agreement calls for the elimination of Customs duties and similar charges on, or in connection with, the importation of products, classified for Customs purposes under specific tariff items enumerated in the annex to the agreement if the products are for use in a civil aircraft and incorporated therein, in the course of its manufacture, repair, maintenance, rebuilding, modification, or conversion. The specific tariff items are enumerated in the "Statutory Changes Duty-Free Treatment Under the TSUS" section of this document. The agreement also calls for the elimination of Customs duties and similar charges on repairs to civil aircraft.

Title VI of Public Law 96–39, "Civil Aircraft Agreement," implements those parts of the agreement relating to duty-free treatment by the United States of (1) specified civil aircraft and aircraft parts certified for use in civil aircraft and admitted into the United States from a nation-entitled to most-favored-nation tariff treatment; and (2) the cost of repair parts, materials, or expenses of repair in a foreign country upon a U.S. civil aircraft.

EFFECTIVE DATE

Section 601(a) of title VI provides that when conditions under section 2(b) of the act are fulfilled and the President accepts the agreement for the United States, he may proclaim, after September 30, 1979, the changes provided for under this section. However, the agreement provides for the elimination of applicable Customs duties no later than January 1, 1980. It is anticipated that the January 1, 1980, date will be the effective date for implementing the statutory changes made by title VI.

PRESENT LAW

Aircraft and aircraft parts presently are classifiable under schedule 6, part 6, subpart C, Tariff Schedules of the United States (TSUS) (19 U.S.C. 1202). They are subject to a column 1 (most favored

nation) rate of duty of 5 percent ad valorem. General headnote 10(ij), TSUS (setting forth interpretative rules relating to the tariff schedules), limits the application of item 694.60 to aircraft parts solely or chiefly used as parts of aircraft if those parts are not specifically provided for elsewhere in the TSUS. Numerous aircraft parts are more specifically provided for elsewhere in the TSUS. Certain aircraft and aircraft parts may be admitted duty-free under the Generalized System of Preferences (general headnote 3(c), TSUS) if they are produced in a beneficiary developing country.

STATUTORY CHANGES

DUTY-FREE TREATMENT UNDER THE TSUS

Section 601(a)(1) of the act creates a new headnote 3 under schedule 6, part 6, subpart C, TSUS, defining the term "certified for use in civil aircraft." That term means that the imported article:

1. Has been imported for use in civil aircraft;
2. Will be so used in civil aircraft; and
3. Has been approved by the Federal Aviation Administration, or that an application for approval for such use has been submitted to, and accepted by, that agency, or that such use has been approved by the airworthiness authority in the country of exportation if such authority is recognized by the Federal Aviation Administration. The importer is required to file a written statement to that effect if the article is to be imported duty free.

The new headnote also defines the term "civil aircraft" to mean "all aircraft other than aircraft purchased for use by the Department of Defense or the U.S. Coast Guard."

Section 601(a)(2) sets forth the TSUS item numbers for which duty-free treatment in column 1 of the tariff schedules is accorded those articles "certified for use in civil aircraft." The item numbers listed in title VI of the act are:

518.51	660.97	680.47	685.24	694.40	711.98
544.41	661.10	680.50	685.29	694.60	712.05
642.20	661.12	680.55	685.40	709.45	712.47
647.03	661.15	680.56	685.60	710.08	712.49
647.05	661.20	682.07	685.70	710.14	715.15
652.09	661.35	682.40	686.22	710.16	720.08
653.39	661.90	682.60	686.24	710.30	727.47
653.94	661.95	683.60	686.60	710.46	727.48
660.44	662.50	684.30	688.12	711.36	727.55
660.46	664.10	684.40	688.40	711.37	475.45
660.52	676.15	684.50	694.15	711.82	772.45
660.54	676.30	684.70	694.20	711.84	772.65
660.85	678.50				

The precise coverage of duty-free treatment of these item numbers will be determined by the nature of implementation of the agreement by other signatories. Any change in these item numbers will be effectuated by the Presidential proclamation to be issued pursuant to section 601(a) of the act. It is understood by the Customs Service that the new item numbers will be:

518.52	660.99	680.61	684.72	694.21	711.81
544.43	661.08	680.65	685.25	694.41	712.00
642.22	661.14	680.75	685.31	694.62	712.06
647.04	661.17	680.78	685.41	709.46	712.48
647.07	661.22	682.08	685.61	710.09	712.52
652.11	661.37	682.42	685.72	710.15	715.16
653.41	661.91	682.46	686.21	710.17	720.09
653.98	661.97	682.61	686.25	710.31	727.49
660.58	662.52	683.62	686.62	710.47	727.51
660.61	664.12	684.26	688.14	711.33	727.56
660.69	676.16	684.31	688.42	711.39	772.46
660.73	676.31	684.42	694.16	711.76	772.67
660.87	678.48	684.51			

APPLICATION OF 19 U.S.C. 1466

Section 601(a)(3) of the act amends section 466, Tariff Act of 1930, as amended (19 U.S.C. 1466), by adding a new subsection (f). This provision eliminates the duty on the cost of repair parts, materials, or expenses of repairs in a foreign country upon a U.S. civil aircraft. However, foreign equipment purchases for use in U.S.-registered civil aircraft will remain dutiable under the amended provisions of 19 U.S.C. 1466.

It is understood by the Customs Service, however, that amendatory legislation has been introduced to provide that equipment purchased for use in U.S.-registered civil aircraft will no longer be dutiable under 19 U.S.C. 1466.

TERMINATION OF DUTY-FREE TREATMENT

Section 601(b) of the act provides that for purposes of section 125 of the Trade Act of 1974, the amendments made under section 601(a), if any, shall be considered to be trade agreement obligations entered into under the Trade Act of 1974 of benefit to foreign countries or instrumentalities. This section permits the President to terminate or withdraw duty-free treatment if he determines that any foreign country has withdrawn, suspended, or modified the application of trade agreement obligations of benefit to the United States without granting adequate compensation.

PROPOSED AMENDMENTS TO THE REGULATIONS

It is proposed to amend parts 6 and 10, Customs Regulations (19 CFR parts 6 and 10), to take into account the statutory changes made by title VI of the act.

PART 6—AIR COMMERCE REGULATIONS

1. Section 6.7(d), Customs Regulations (19 CFR 6.7(d)), would be amended by adding new paragraphs (d)(1) and (d)(2).

Proposed paragraph (d)(1) would provide that duty under 19 U.S.C. 1466 shall not apply to the cost of repair parts, materials, or expenses of repairs in a foreign country upon a U.S. civil aircraft. However, the cost of repair parts or materials or the expenses of repairs in a foreign country, would continue to be subject to entry. (See S. Rpt. No. 96–249, 96th Cong., 1st Sess., p. 188.) Pursuant to T.D. 79–86 (44 F.R. 17250, March 21, 1979), Customs Form 226, "Record of Vessel/Aircraft Foreign Repair or Equipment Purchase," would be used for this purpose in place of Customs Form 7535, "Vessel/Aircraft Foreign Repair or Equipment Purchase Entry."

Proposed paragraph (d)(2) would provide that any equipment purchases in a foreign country would continue to be subject to declaration, entry, and deposit of duty. However, instead of filing a separate declaration on Customs Form 226, a statement may be added to Customs Form 226 when used as the entry that (1) the entry contains a complete account of the equipment purchases and the cost of the equipment, including installation, and (2) application is made for the ascertainment of duty due. A declaration of Customs Form 226, in lieu of Customs Form 3415, "Declaration of Foreign Repairs to Vessels or Aircraft" (see T.D. 79–86), to the effect that no equipment was purchased in a foreign country would not be required.

2. Section 6.7(e) would be amended to provide that a scheduled airline or an air carrier authorized to operate contract passenger or cargo flights and operating between the United States and foreign territory shall not be required (1) to file a declaration or entry on Customs Form 226, (2) to deposit duty or give a bond for equipment purchased for the aircraft, or (3) to file an entry on Customs Form 226 for repair parts or materials purchased for, or for expenses of repairs made to, the aircraft if any one of the four conditions found in present and proposed sections 6.7(e) (1), (2), (3), and (4) is applicable.

PART 10—ARTICLES CONDITIONALLY FREE, SUBJECT TO REDUCED RATE, ET CETERA

1. Proposed section 10.41(c) would be amended by adding a cross-reference to proposed new section 10.180, relating to civil aircraft and parts for civil aircraft.

2. Part 10 would be amended by adding a new section 10.180, "Civil aircraft and parts for civil aircraft."

Proposed section 10.180(a) would define the term "civil aircraft" to mean all aircraft other than aircraft purchased for use by the Department of Defense or the U.S. Coast Guard.

Proposed section 10.180(b) would provide that civil aircraft may be admitted free of duty if certified for use in accordance with headnote 3 of schedule 6, part 6, subpart C, TSUS, and this section.

Proposed section 10.180(c) would provide that the importer (as defined in section 101.1(k), Customs Regulations (19 CFR 101.1(k)), shall submit a certificate and any additional documentation required by Customs to verify the claim for admission free of duty. Although the legislative history of the act states that the certification shall be filed at the "time of entry," Customs will interpret this to mean at the time of filing the entry summary documentation. (See sections 141.0a(b), 142.12, and 142.13; T.D. 79–221). However, the additional documentation need not be provided if the district director is satisfied that the documents will be available for inspection for 5 years from the "time of entry." (See section 141.68; T.D. 79–221). Proposed section 10.180(c) also would provide that proof of end-use of the aircraft or parts in civil aviation need not be furnished. Furthermore, if the district director determines that the required document is not available at the time of filing the entry summary, the importer may enter the aircraft and aircraft parts at the free rate of duty and post a bond for the missing document. Failure to provide the missing document may result in liquidation of the entry as dutiable and assessment of liquidated damages under the bond.

Section 10.180(d) would set forth the form of certification and require the importer to check the appropriate box(es) under item (1) of the certification that:

(a) The article has been approved for use as or in civil aircraft by the Federal Aviation Administration (FAA).

(b) The article has been approved by the airworthiness authority in the country of exportation and the approval is recognized by the FAA.

(c) An application for approval for use as or in civil aircraft for the article has been submitted to and accepted (i.e., received) by the FAA.

Item (2) of the certification would require the importer to certify that the article has been imported for use as or in civil aircraft and will be so used. The importer would be required to sign and date the certification.

Proposed section 10.180(e) would provide that articles covered under item (2)(c) of the certification shall be admitted conditionally free of duty. Proposed paragraph (e) also would provide the procedure to be

used when these articles have been approved by the FAA so that the entry may be liquidated as duty free or dutiable, depending on the circumstances discussed in section 10.180(e).

Proposed section 10.180(f) would require notification to Customs and the tender of duties if any aircraft or aircraft part admitted under this section is diverted from its intended use as or in civil aircraft, or a decision is made to divert the article from the intended use.

Proposed section 10.180(g) would provide that the district director shall monitor and periodically audit selected entries made under section 10.180.

Proposed section 10.180(h) would state that providing false or fraudulent statements, declarations, or other documentation may result in liability being incurred under 19 U.S.C. 1592.

Proposed section 10.180(i) would refer the reader to sections 6.7 (d) and (e) for provisions relating to the dutiability of equipment, repair parts, or materials, or expenses of repairs in a foreign country, upon a U.S. civil aircraft under the provisions of 19 U.S.C. 1466.

OTHER CHANGES

1. It is proposed to make several stylistic changes in the above-discussed sections for editorial clarity.

2. Section 10.41(b) was deleted by T.D. 70–121 (35 F.R. 8222, May 26, 1970). Therefore, it is proposed to amend the first sentence of section 10.41(d) by deleting the phrase "except as stated in the parenthetical matter in paragraph (b) of the section."

AUTHORITY

These amendments are proposed under the authority of R.S. 251, as amended (19 U.S.C. 66), section 466, 46 Stat. 718, section 624, 46 Stat. 759 (19 U.S.C. 1466, 1624), and section 3(b), 93 Stat. 144 (Public Law 96–39).

COMMENTS

Before adopting this proposal, consideration will be given to any written comments, preferably in triplicate, that are submitted timely to the Commissioner of Customs. Comments submitted will be available for public inspection in accordance with section 103.8(b), Customs Regulations (19 CFR 103.8(b)), during regular business hours at the Regulations and Research Division, Headquarters, U.S. Customs Service, 1301 Constitution Avenue NW., room 2335, Washington, D.C. 20229.

DRAFTING INFORMATION

The principal authors of this document were John E. Elkins, and Charles D. Ressin, Regulations and Research Division, Office of

Regulations and Rulings, U.S. Customs Service. However, personnel from other Customs offices participated in its development.

PROPOSED AMENDMENTS

It is proposed to amend parts 6 and 10, Customs Regulations (19 CFR parts 6, 10), in the following manner:

PART 6—AIR COMMERCE REGULATIONS

1. It is proposed to amend section 6.7(d) to read as follows:

6.7 Documents for entry.

* * * * * * *

(d) The provisions of section 466, Tariff Act of 1930, as amended (19 U.S.C. 1466), are applicable to any aircraft of U.S. registry engaged in trade and arriving in the United States, as defined in section 401(h), Tariff Act of 1930, as amended (19 U.S.C. 1401(h)), whether from a contiguous or noncontiguous foreign country, to the extent provided in paragraphs (d)(1) and (d)(2). A notation as to any equipment purchased for or installed on, or repairs made to, any such aircraft in a foreign country shall be made in the aircraft journey logbook, which shall set forth a general description of the equipment or repairs and a statement of any necessity therefor. The aircraft commander or an authorized person, on the first subsequent arrival of the aircraft in the United States, shall exhibit the journey logbook to the Customs officer at the place of arrival.

(1) The duty imposed under section 466(a), Tariff Act of 1930, as amended, shall not apply to the cost of repair parts, materials, or expenses of repairs in a foreign country upon a U.S. civil aircraft, as defined in section 10.180(a) of this chapter. However, the cost of repair parts or materials, or the expenses of repairs, in a foreign country, shall be subject to entry on Customs Form 226, as prescribed by section 4.14 of this chapter, but no declaration shall be required.

(2) Except as specified hereafter in this paragraph and section 6.7(e), any equipment purchases shall be subject to declaration, entry, and deposit of duty, as prescribed by section 4.14 of this chapter. However, instead of filing a separate declaration on Customs Form 226, the following may be added to Customs Form 226 when used as the entry:

> This entry contains a complete account of the equipment purchased for the within-mentioned aircraft during the flight covered hereby, together with the cost of such equipment (including the cost of installation of equipment). Application

is hereby made for the ascertainment of the amount of duty due under section 466, Tariff Act of 1930, as amended.

A declaration on Customs Form 226 to the effect that no equipment was purchased in a foreign country shall not be required in any case for any such aircraft.

2. It is proposed to amend section 6.7(e) to read as follows:

(e) A scheduled airline or an air carrier generally authorized to operate contract passenger or cargo flights and operating between the United States and foreign territory shall not be required to file a declaration or an entry on Customs Form 226, or deposit duty, or give a bond, for equipment purchased for the aircraft; or to file an entry on Customs Form 226 for repair parts or materials purchased for, or for expenses of repairs made to, the aircraft, if—

(1) The equipment or repairs were made necessary by reason of stress of weather or other casualty occurring since the aircraft's last departure from the United States; or

(2) The equipment or repairs were necessary to secure the safety and airworthiness of the aircraft, provided the necessity of equipment or repairs was unforeseen before the aircraft's last departure from the United States; or

(3) The equipment or repairs were necessary to comply with regulations of the Federal Aviation Administration or other agency of the United States or of a foreign government, provided the necessity for the equipment or repairs was unforeseen before the aircraft's last departure from the United States; or

(4) The equipment purchased or installed and materials used in making the repairs were manufactured or produced in the United States and the work incident to the installation or repairs was performed by the regular crew of the aircraft or by residents of the United States.

Whenever entry is not required in any of the foregoing circumstances, the following statement shall be included on the general declaration or attached air cargo manifest:

Entry for equipment purchased or installed or repairs made to this aircraft while in a foreign country not required under section 6.7(e) of the Customs Regulations.

In all cases where entry is not required, the district director shall be satisfied from an inspection of the journey log book and such further investigation as he may deem necessary that the facts with respect to the purchase or installation of the equipment and making of repairs were as set forth in paragraph (e) (1), (2), (3), or (4) of this section.

PART 10—ARTICLES CONDITIONALLY FREE, SUBJECT TO A REDUCED RATE, ET CETERA

1. It is proposed to amend section 10.41(c) to read as follows:

10.41 Instruments; exceptions.

* * * * * * *

(c) Foreign-owned aircraft arriving in the United States shall be subject to the treatment provided for in part 6 of this chapter, unless entered under the provisions of section 10.31, section 10.180, or paragraph (d) of this section.

2. It is proposed to amend part 10 by adding a new section 10.180 to read as follows:

10.180 Civil aircraft and parts for civil aircraft.

(a) *Definition.* "Civil aircraft" when used in this section means all aircraft other than aircraft purchased for use by the Department of Defense or the U.S. Coast Guard.

(b) *Admission free of duty.* Civil aircraft and parts for civil aircraft may be admitted free of duty under the provisions of headnote 3, schedule 6, part 6, subpart C, Tariff Schedules of the United States (19 U.S.C. 1202), if certified for use in accordance with that headnote and the provisions of this section.

(c) *Documentation.* At the time of filing the entry summary, the importer shall submit a certificate in the form described in paragraph (d), together with a copy of the written order, contract, or any additional documentation Customs shall require, to verify the claim for admission free of duty. A copy of the written order or contract, or the additional documentation, need not be provided if the district director is satisfied that the documents will be available for inspection for 5 years from the time of entry, as provided by part 162 of this chapter. "Time of entry" is defined in section 141.68 of this chapter. Proof of end-use of the aircraft or parts need not be furnished. If the district director determines that documentation necessary to verify the claim for entry free of duty is not available at the time of filing the entry summary, the importer may enter the aircraft or aircraft parts and post a bond (see section 113.42 of this chapter) for the missing document in accordance with sections 141.66 and 141.91 of this chapter.

(d) *Certification.* The required certification shall be in the following form:

I CERTIFY THAT:

(1) The article(s) specifically identified in entry summary has (have) been imported for use as or in civil aircraft and, to the best of my knowledge and belief, will be so used.

(2) (Check the appropriate box(es))

☐ (a) The article(s) specifically identified in the entry summary has (have) been approved for use as or in civil aircraft by the Administrator of the Federal Aviation Administration ("FAA"). (Enter approved part number(s) _____ or attach copy of approval letter(s).)

☐ (b) The article(s) specifically identified in the entry summary has (have) been approved by _____, the airworthiness authority in the country of exportation. This approval is recognized by the FAA as an acceptable substitute for FAA approval. (Enter approved part number(s) _____ or attach copy of approval letter(s).)

☐ (c) An application for approval for use as or in civil aircraft for the article(s) specifically identified in the entry summary has been submitted to and accepted (i.e., received) by the Administrator of the FAA.

_____

Importer's Signature and Date

The certification may be stamped, typed, or printed on the entry summary or submitted as a separate document.

(e) *Conditionally free entry.* Articles covered by item 2(c) of the certification set forth in paragraph (d) of this section shall be admitted conditionally free of duty. When the articles have been approved for use as or in civil aircraft by the Administrator of the Federal Aviation Administration, the importer shall submit the approved part number(s) or a copy of the approval letter(s) to the appropriate Customs officer at the port where the entry was made so the entry may be liquidated free of duty. If Customs does not receive the necessary documentation to liquidate the entry free of duty within 1 year of the date of entry, the conditionally free entry shall be liquidated as dutiable. Before expiration of the 1-year period, the importer may request that the period for liquidation be extended, as provided in section 159.12 of this chapter. If the necessary documentation is not received within 1 year or such additional period as may be granted, not to exceed four years from the date of entry or the date of final withdrawal from warehouse, the entry shall be liquidated as dutiable.

(f) *Diversion.* If any aircraft or aircraft part admitted under this section is diverted from its intended use as or in civil aircraft, or a decision is made to divert the article from the intended use, the importer or other person diverting or deciding to divert the article shall give immediate written notice of that diversion or intent to divert to the district director of the district where entry

was made. A tender of duties due because of the diversion or intended diversion shall accompany the notice.

(g) *Verification.* The district director shall monitor and periodically audit selected entries made under this section.

(h) *Penalties.* Providing a false or fraudulent statement, delaration, or other documentation may result in liability being incurred under 19 U.S.C. 1592.

(i) *Cost of equipment, repair parts, or materials, or expenses of repairs in a foreign country.* Provisions relating to the declaration entry, and dutiability of the costs of equipment, repair parts, or materials, or expenses of repairs, in a foreign country upon a U.S. civil aircraft under the provisions of section 466, Tariff Act of 1930, as amended (19 U.S.C. 1466), are set forth in sections 6.7(d) and (e) of this chapter.

WILLIAM T. ARCHEY,
Acting Commissioner of Customs.

Approved: December 31, 1979.

RICHARD J. DAVIS,
Assistant Secretary of Treasury.

[Published in the Federal Register, Jan. 8, 1980 (44 F.R. 1633)]

Recent Unpublished Customs Service Decisions

The following listing of recent administrative decisions issued by the Office of Regulations and Rulings, U.S. Customs Service, and not otherwise published, is published for the information of Customs officers and the importing community. Although the decisions are not of sufficient general interest to warrant publication as Treasury decisions, the listing describes the issues involved and is intended to aid Customs officers and concerned members of the public in identifying matters of interest which recently have been considered by the Office of Regulations and Rulings.

A copy of any decision included in this listing, identified by its date and file number, may be obtained in a form appropriate for public distribution upon written request to the Office of Regulations and Rulings, attention: Legal Reference Area, room 2404, U.S. Customs Service, 1301 Constitution Avenue NW., Washington D.C. 20229. These copies will be made available at a cost to the requester of 10 cents per page. However, the Customs Service will waive this charge if the total number of pages copied is 10 or less.

Decisions listed in earlier issues of the CUSTOMS BULLETIN, through October 24, 1979, are available in microfiche format at a cost of $15.10 (15 cents per sheet of fiche). It is anticipated that additions to the microfiche will be made quarterly and subscriptions are available. Requests for the microfiche now available and for subscriptions should be directed to the Legal Reference Area. Subscribers will automatically receive updates as they are issued and will be billed accordingly.

Dated: January 2, 1980.

SALVATORE E. CARAMAGNO,
Acting Director, Office of Regulations and Rulings.

Date of decision	File No.	Issue
12-11-79	104168	Carrier control: Whether coastwise law prohibits the use of foreign-flag vessels to transport bunker oil from U.S. ports to vessels moored at or at anchor on the high seas off a deepwater port
12-12-79	104329	Instruments of international traffic: Whether specified containers qualify as instruments of international traffic

Date of decision	File No.	Issue
11-30-79	104330	Instruments of international traffic: Whether woven polypropylene bags used to transport dry chemicals qualify as instruments of international traffic
12-12-79	104358	Vessel repair: Dutiability under vessel repair statute of replacement of main engines and certain auxiliary equipment on U.S.-registered vessels in a foreign shipyard
12-12-79	711341	Country of origin marking: Quick coupon cutters
12-12-79	711504	Country of origin marking: Clock-radio combination
11-23-79	055755	Generalized system of preferences: Whether sintered rough molds produced in Mexico from imported carbide powders and used in producing finished carbide products are constituent materials for purposes of the 35 percent value-added requirement
11-23-79	055766	Generalized system of preferences: Whether metal corners and parts for picture frames are eligible for free entry if produced in Mexico from imported materials and combined into packages of a predetermined number of pieces
11-23-79	055769	Generalized system of preferences: Whether the molding of imported plastic pellets into bases and covers for cassettes results in substantially transformed constituents materials for purposes of the 35 percent value-added requirement
11-10-79	060692	Classification: Whether a textile loop attached to shorts is ornamental (380.04)
12- 4-79	060710	Classification: Digestive aid for dogs (184.75, 432.00)
12-11-79	060953	Classification: Plastic container bags (772.20)
12- 4-79	060983	Classification: Whether skirt with ties anchored in side seams is ornamented (382.33)
12-10-79	061518	American selling price: Open-toe, ankle strap, women's casual shoe with fabric upper and low wedge (700.60)
12-11-79	061528	American selling price: Unfinished Y-thong (700.60)
12-10-79	061783	Classification: Wooden curio cabinets (206.98, 727.35)
12- 4-79	062437	Classification: Bags of polyethylene and polypropylene fabrics coated on both sides with plastic (385.53, 772.20)
12-10-79	062631	Classification: Plastic skip rope (735.20)
12- 7-79	062688	Classification: Hose protector (774.60)
12-10-79	062700	Classification: Plastic sun visor (657.25, 774.60)
12-11-79	062817	Classification: Gas cookers (653.52)
12-10-79	062921	Classification: Plastic sun visor (703.72, 772.30)
12-11-79	062951	Classification: Boot roller skate (734.90)
12- 6-79	064031	Classification: Woman's robe of polyester fleece (382.78)
11- 3-79	064054	Classification: Rigid foamed acrylic plastic sheet (770.30)

Decisions of the United States Customs Court

United States Customs Court

One Federal Plaza
New York, N.Y. 10007

Chief Judge

Edward D. Re

Judges

Paul P. Rao
Morgan Ford
Scovel Richardson
Fredrick Landis
James L. Watson
Herbert N. Maletz
Bernard Newman
Nils A. Boe

Senior Judge

Samuel M. Rosenstein

Clerk

Joseph E. Lombardi

Abstracts

Abstracted Protest Decision

DEPARTMENT OF THE TREASURY, *January 2, 1980.*

The following abstracts of decisions of the United States Customs Court at New York are published for the information and guidance of officers of the customs and others concerned. Although the decisions are not of sufficient general interest to print in full, the summary herein will be of assistance to customs officials in easily locating cases and tracing important facts.

ROBERT E. CHASEN,
Commissioner of Customs.

DECISION NUMBER	JUDGE & DATE OF DECISION	PLAINTIFF	COURT NO.	ASSESSED	HELD	BASIS	PORT OF ENTRY AND MERCHANDISE
				Par. or Item No. and Rate	Par. or Item No. and Rate		
P79/226	Maletz, J. December 28, 1979	North American Foreign Trading Corp.	78-4-00619, etc.	Item 735.20 10%	Item 734.20 5.5%	APF Electronics Inc. v. U.S. (C.D. 4784)	Los Angeles T.V. game machines

Decisions of the United States Customs Court

Abstracts

Abstracted Reappraisement Decisions

DECISION NUMBER	JUDGE & DATE OF DECISION	PLAINTIFF	COURT NO.	BASIS OF VALUATION	HELD VALUE	BASIS	PORT OF ENTRY AND MERCHANDISE
R79/266	Re, C. J. December 28, 1979	Bus and Truck Supply Co.	73-2-00570, etc.	Export value	Appraised values, less 10% (excluding from 10% deduction the value of any Michelin tires included in appraised values), less value of components of U.S. origin allowed on liquidation	Agreed statement of facts	New Orleans Inter-city passenger buses

Judgment of the U.S. Customs Court in Appealed Case

DECEMBER 26, 1979

Appeal 79-7.—United States *v.* H. Rosenthal Co.—MEN'S AND BOYS' QUILTED SNORKEL PARKAS—WEARING APPAREL—GARMENTS DESIGNED FOR RAINWEAR OF COATED FABRICS—TSUS.—C.D. 4769 affirmed November 15, 1979 (C.A.D. 1236).

International Trade Commission Notices

Investigations by the U.S. International Trade Commission

DEPARTMENT OF THE TREASURY

The appended notices relating to investigations by the U.S. International Trade Commission are published for the information of Customs officers and others concerned.

R. E. CHASEN,
Commissioner of Customs.

(AA1921-214)

SPUN ACRYLIC YARN FROM ITALY

Notice of Investigation and Hearing

Having received advice from the Department of the Treasury on December 17, 1979, that spun acrylic yarn from Italy is being, or is likely to be, sold at less than fair value, the U.S. International Trade Commission, on December 27, 1979, instituted investigation No. AA1921-214 under section 201(a) of the Antidumping Act, 1921, as amended (19 U.S.C. 160 (a)), to determine whether an industry in the United States is being or is likely to be injured, or is prevented from being established, by reason of the importation of such merchandise into the United States. For purposes of the Treasury Department's determination, "spun acrylic yarn" means spun yarn of acrylic classified under item 310.50 of the Tariff Schedules of the United States.

This investigation will be conducted in conjunction with investigation No. AA1921-212, "Spun Acrylic Yarn from Japan," which was instituted on November 21, 1979 (44 F.R. 68040, November 28, 1979).

Conduct of the investigation under the Trade Agreements Act of 1979.—Under the Antidumping Act, 1921, the Commission is required to notify the Treasury Department of its determination in this investiga-

tion not later than March 17, 1980. However, under section 102 of the Trade Agreements Act of 1979 (Public Law 96-39, 93 Stat. 144, July 26, 1979), the Commission would be required to terminate this investigation on January 1, 1980, and initiate an investigation under subtitle B of title VII of the Tariff Act of 1930, as added by the Trade Agreements Act of 1979, if the conditions set forth in sections 2 and 107 of the Trade Agreements Act are fulfilled by January 1, 1980. In the event that the Trade Agreements Act becomes effective on January 1, 1980, this present investigation will be terminated and a new investigation will be instituted which will be conducted under the provisions of sections 101 and 102 of the Trade Agreements Act. That act requires this new investigation to be completed within 75 days after January 1, 1980. On the assumption that the new law will become effective, the procedures described below will be followed in the present investigation.

After January 1, 1980, however, the rules adopted by the Commission on December 19, 1979, to govern 75 days investigations will be applicable, except where they require a date for submission of prehearing statements different from the date set out in this notice. The rules will become part 207, subpart C of the Commissions Rules of Practice and Procedure and appear in the Federal Register of December 26, 1979.

Hearing.—A public hearing in connection with this investigation, and investigation No. AA1921-212, "Spun Acrylic Yarn from Japan," will be held on Tuesday, January 22, 1980, in the Commission's hearing room, U.S. International Trade Commission Building, 701 E Street NW., Washington, D.C. 20436, beginning at 10 a.m., e.s.t. Requests to appear at the public hearing should be filed in writing with the Secretary to the Commission not later than close of business (5:15 p.m., e.s.t.), Tuesday, January 15, 1980. (If it appears that the dumping provisions of the Trade Agreements Act will not be effective on January 1, 1980, a notice rescheduling the hearing (and related prehearing report and statements) for an earlier date will be issued.)

Prehearing statements.—The Commission will prepare and place on the record by January 8, 1980, a staff report containing preliminary findings of fact. Parties to the investigation will submit to the Commission a prehearing statement by January 18, 1980. Such statement should include the following:

(a) Exceptions, if any, to the preliminary findings of fact contained in the staff report;

(b) Any additional or proposed alternative findings of fact;

(c) Proposed conclusions of law; and

(d) Any other information and arguments which a party believes relevant to the Commission's determination in this investigation.

Collection and confidentiality of information.—Requests for confidential treatment of information submitted to the Commission should be directed to the attention of the Secretary. Requests must conform with the requirements of section 201.6 of the Commission's Rules of Practice and Procedure (19 CFR 201.6).

Information submitted to or gathered by the Commission in conjunction with this proceeding under section 201(a) of the Antidumping Act will be placed in the record of the proceeding instituted under title VII of the Tariff Act of 1930, as added by the Trade Agreements Act, if and when that law becomes effective. That information will be subject to the new antidumping provisions regarding access to information set forth in title VII. Those provisions relate to the collection and retention of information by the Commission and the maintenance of confidentiality or the disclosure of information. The provisions of section 777 of title VII will require the following:

(a) A record of all ex parte meetings between interested parties or persons providing factual information in connection with an investigation and the Commissioners, their staffs, or any person charged with making a final recommendation in an investigation;

(b) Disclosure of nonconfidential information or nonconfidential summaries of confidential information which is not in a form that can be associated with or used to identify the operations of a particular person;

(c) Preventing disclosure of confidential information unless the party submitting the information consents to the disclosure; and

(d) Limited disclosure of certain confidential information under protective order or by an order of the U.S. Customs Court.

Section 516A of the Tariff Act of 1930, as amended by the Trade Agreements Act, will require that all information in the record before the Commission in the title VII investigation, whether confidential or nonconfidential in nature, become part of the record before the U.S. Customs Court in any action under section 516A regarding a Commission determination. Section 771 provides definitions applicable to title VII.

The Commission is prescribing these procedures pursuant to section 335 of the Tariff Act of 1930, as amended (19 U.S.C. 1335), which authorizes the Commission to adopt such reasonable procedures as are necessary to carry out its functions and duties.

By order of the Commission.

Issued: December 28, 1979.

KENNETH R. MASON,
Secretary.

Color Television Receivers and Subassemblies Thereof

Investigation and Hearing

Investigation instituted.—Following receipt of a petition on December 17, 1979, filed by the Industrial Union Department, AFL–CIO, et al., the U.S. International Trade Commission on December 31, 1979, instituted an investigation under section 203(i)(3) of the Trade Act of 1974 (19 U.S.C. 2253(i)(3)) for the purpose of gathering information in order that it might advise the President of its judgment as to the probable economic effect on the domestic industry concerned of the determination of import relief presently in effect with respect to the color television receivers, assembled or not assembled, finished or not finished, and subassemblies thereof, from Japan, Taiwan, and Korea, provided for in items 685.11, 685.14, and 685.15 (all of which were formerly provided for in item 685.20), of the Tariff Schedules of the United States (TSUS). The relief is provided against imports from Japan in Proclamation 4511 (issued June 27, 1977, 42 F.R. 32747 (1977) and the relief against imports from Taiwan and Korea in items 923.74 through 923.83, inclusive, of the TSUS (Proclamation 4634, 44 F.R. 5633 (1979)). Import relief presently in effect with respect to such articles is scheduled to terminate at the close of June 30, 1980, unless extended by the President.

Public hearing ordered.—A public hearing in connection with this investigation will be held in Washington, D.C., at 10 a.m., e.s.t., on Wednesday, March 5, 1980, in the hearing room, U.S. International Trade Commission Building, 701 E Street NW. Requests for appearances at the hearing should be received in writing by the Secretary to the Commission at his office in Washington no later than noon on February 29, 1980.

Inspection of petition.—The petition filed in this case is available for public inspection at the Office of the Secretary, U.S. International Trade Commission, and at the New York City office of the U.S. International Trade Commission located at 6 World Trade Center.

By order of the Commission.

Issued: January 3, 1980.

Kenneth R. Mason,
Secretary.

In the Matter of CERTAIN FOOD SLICERS AND COMPONENTS THEREOF	Investigation No. 337-TA-76

Order

Pursuant to my authority as Chief Administrative Law Judge of this Commission, I hereby designate Administrative Law Judge Janet D. Saxon as presiding officer in this investigation.

The Secretary shall serve a copy of this order upon all parties of record and shall publish it in the Federal Register.

Issued: December 31, 1979.

DONALD K. DUVALL,
Chief Administrative Law Judge.

Index

U.S. Customs Service

Treasury decisions:

Foreign currencies:

	T.D. No.
Daily certified rates; December 10–14, 1979	80–14
Daily certified rates; December 17–21, 1979	80–16
Rates which varied from quarterly rate; Dec. 10–14, 1979	80–15
Rates which varied from quarterly rate; Dec. 17–21, 1979	80–17
Potassium chloride, otherwise known as muriate of potash, from Canada	80–18
Synopses of drawback decisions	80–19
Aircraft, agricultural	80–19–A
Vessels, seiner-type fishing vessels	80–19–B

Customs Court

Judgment in appealed case (p. —):

Appeal 79–7—Men's and boys' quilted snorkel parkas; wearing apparel; garments designed for rainwear of coated fabrics; TSUS

I 307-466 Item 950-D T 1.11/3:14/5
JAN 31 1980
C-350

Customs Bulletin

Regulations, Rulings, Decisions, and Notices concerning Customs and related matters

and Decisions

of the United States Court of Customs and Patent Appeals and the United States Customs Court

contin
9247

Vol. 14 JANUARY 30, 1980 No. 5

This issue contains

T.D. 80–20 thru 80–28
C.D. 4835 and 4836
Protest abstracts P80/1 thru P80/9
Reap. abstracts R80/1
International Trade Commission Notice

THE DEPARTMENT OF THE TREASURY
U.S. Customs Service

NOTICE

The abstracts, rulings, and notices which are issued weekly by the U.S. Customs Service are subject to correction for typographical or other printing errors. Users may notify the U.S. Customs Service, Logistics Management Division, Washington, D.C. 20229, of any such errors in order that corrections may be made before the bound volumes are published.

For sale by the Superintendent of Documents, U.S. Government Printing Office, Washington, D.C. 20402. Price: $1.30 (single copy domestic); $1.65 (single copy foreign). Subscription price: $65.00 a year domestic; $81.25 a year foreign.

U.S. Customs Service

Treasury Decision

(T.D. 80-20)

Foreign Currencies—Daily Rates for Countries Not on Quarterly List

Rates of exchange based on rates certified to the Secretary of the Treasury by the Federal Reserve Bank of New York for the Brazil cruzeiro, People's Republic of China yuan, Hong Kong dollar, Iran rial, Philippines peso, Singapore dollar, Thailand baht (tical) and Venezuela bolivar

The Federal Reserve Bank of New York, pursuant to section 522(c), Tariff Act of 1930, as amended (31 U.S.C. 372(c)), has certified buying rates for the dates and foreign currencies shown below. The rates of exchange, based on these buying rates, are published for the information and use of Customs officers and others concerned pursuant to part 159, subpart C, Customs Regulations (19 CFR 159, subpart C).

Brazil cruzeiro:	
December 24-31, 1979	$0.0235
People's Republic of China yuan:	
December 24-28, 1979	$0.066335
December 31, 1979	.666711
Hong Kong dollar:	
December 24-26, 1979	$0.203046
December 27, 1979	.202327
December 28, 1979	.203459
December 31, 1979	.202429
Iran rial:	
December 24-31, 1979	Not available
Philippines peso:	
December 24-31, 1979	$0.1350

Singapore dollar:	
December 24–26, 1979	$0.461148
December 27, 1979	.457247
December 28, 1979	.457457
December 31, 1979	.463392
Thailand baht (tical):	
December 24–27, 1979	$0.0495
December 28–31, 1979	.0487
Venezuela bolivar:	
December 24–31, 1979	$0.2329

(LIQ-3-TRODE)

Dated: January 8, 1980.

DANIEL D. SULLIVAN
(For G. Scott Shreve, Acting
Director, Duty Assessment Division.)

(T.D. 80-21)

Foreign Currencies—Variances From Quarterly Rate

Rates of exchange based upon rates certified to the Secretary of the Treasury by the Federal Reserve Bank of New York

The following rates of exchange are based upon rates certified to the Secretary of the Treasury by the Federal Reserve Bank of New York, pursuant to section 522(c), Tariff Act of 1930, as amended (31 U.S.C. 372(c)), and reflect variances of 5 per centum or more from the quarterly rate published in T.D. 79-264 for the following countries. Therefore, as to entries covering merchandise exported on the dates listed, whenever it is necessary for Customs purposes to convert such currency into currency of the United States, conversion shall be at the following rates:

Denmark krone:	
December 24, 1979	$0.186567
December 25, 1979	Holiday
December 26, 1979	.186567
December 27, 1979	(*)
December 28, 1979	.186515
December 31, 1979	(*)

*Rate did not vary this date. Use quarterly rate.

Japan yen:

December 24, 1979	$0.004170
December 25, 1979	Holiday
December 26, 1979	.004183
December 27, 1979	.004170
December 28, 1979	.004157
December 31, 1979	.004161

(LIQ-3-TRODE)

Dated: January 8, 1980.

DANIEL D. SULLIVAN
(For G. Scott Shreve, Acting
Director, Duty Assessment Division).

(T.D. 80-22)

Changes in the Customs Field Organization; Section 101.3, Customs Regulations, Amended

TITLE 19—CUSTOMS DUTIES

CHAPTER I—U.S. CUSTOMS SERVICE

PART 101—GENERAL PROVISIONS

AGENCY: U.S. Customs Service, Department of the Treasury.

ACTION: Final rule.

SUMMARY: This document changes the field organization of the Customs Service by establishing a Customs port of entry at Owensboro, Ky., in the Cleveland, Ohio, Customs district (region IX). This change is needed to help alleviate the excessive workload in the Port of Louisville, Ky. (the only Customs port of entry in Kentucky), and to meet the expanding needs of the importing community in the Owensboro area. The rule is not considered to be significant.

EFFECTIVE DATE: (30 days from the date of publication in the Federal Register).

FOR FURTHER INFORMATION CONTACT: Richard C. Coleman, Office of Inspection, U.S. Customs Service, 1301 Constitution Avenue NW., Washington D.C. 20229; 202-566-8157.

SUPPLEMENTARY INFORMATION:

BACKGROUND

As part of a continuing program to obtain more efficient use of its personnel, facilities, and resources, and to provide better service to carriers, importers, and the public, Customs published a notice in the Federal Register on December 14, 1978 (43 F.R. 58383), proposing, among other changes, to establish a new combined port of entry of Owensboro-Paducah, Ky. (region IX).

Interested parties were given until February 12, 1979, to submit comments regarding this proposed change. No comments were received. After review of the proposal, it was determined that to expedite the extensions of the existing Customs ports of entry, it would be advisable to separate the proposal to establish the new combined port of entry of Owensboro-Paducah from the other proposed changes. Accordingly, a separate document implementing the other changes referred to in the December 14, 1978, notice was published as T.D. 79-169 in the Federal Register on June 15, 1979 (44 F.R. 34478).

Following further review, Customs has determined that, because of the distance between Owensboro and Paducah, it would be in the interest of governmental economy to modify the proposal to establish the combined port of entry to establish only a single Customs port of entry at Owensboro. No further changes relating to Customs services at Paducah are contemplated at this time. Notice of any subsequent action affecting Paducah will be the subject of another document published in the Federal Register.

CHANGE IN THE CUSTOMS FIELD ORGANIZATION

Under the authority vested in the President by section 1 of the act of August 1, 1914, 38 Stat. 623, as amended (19 U.S.C. 2), and delegated to the Secretary of the Treasury by Executive Order No. 10289, September 17, 1951 (3 CFR 1949-1953 comp., ch. II), and pursuant to authority provided by Treasury Department Order No. 101-5 (43 F.R. 31057), Owensboro, Ky., is designated as a Customs port of entry in the Cleveland, Ohio, Customs district (region IX). The geographical boundaries of the Owensboro, Ky., port of entry include all of the territory located within the corporate limits of the city of Owensboro, in the State of Kentucky.

AMENDMENT TO THE REGULATIONS

To reflect this change, the list of Customs regions, districts, and ports of entry in the Cleveland, Ohio, Customs district (region IX) in section 101.3(b), Customs Regulations (19 CFR 101.3(b)), is amended by inserting "Owensboro, Ky., including the territory

described in T.D. 80-22." directly below "Louisville, Ky., * * *" in the column headed "Ports of entry."

INAPPLICABILITY OF EXECUTIVE ORDER 12044

This document is not subject to the Treasury Department directive (43 F.R. 52120) implementing Executive Order 12044, "Improving Government Regulations," because the regulation was in process before May 22, 1978, the effective date of the directive.

DRAFTING INFORMATION

The principal author of this document was Lawrence P. Dunham, Regulations and Research Division, Office of Regulations and Rulings, U.S. Customs Service. However, personnel from other Customs offices participted in its development.

Dated: December 17, 1979.

RICHARD J. DAVIS,
Assistant Secretary of the Treasury.

[Published in the Federal Register, Jan. 18, 1980 (45 F.R. 3573)]

(T.D. 80-23)

Synopses of Drawback Decisions

The following are synopses of drawback rates and amendments issued September 14, 1979, to December 11, 1979, inclusive, pursuant to section 22.1 and 22.5, inclusive, Customs Regulations.

In the synopses below are listed for each drawback rate or amendment approved under section 1313(a), the same of the company, the specified articles on which drawback is authorized, the merchandise which will be used to manufacture or produce these articles, the factories where the work will be accomplished, the date the statement was signed, the basis for determining payment, the Regional Commissioner who issued the rate, and the date on which it was signed.

(DRA-1-09)

Dated: January 10, 1980.

DONALD W. LEWIS,
Director, Office of Regulations and Rulings.

(A) Company: American LaFrance.
Articles: Stainless-steel water tanks for firetrucks.
Merchandise: Imported stainless-steel sheets.

Factory: Elmira, N.Y.
Statement signed: October 30, 1979.
Basis of claim: Appearing in.
Rate issued by Regional Commissioner of Customs: Baltimore, November 13, 1979.

(B) Company: American Seating Co.
Articles: Bus seats.
Merchandise: Imported fabric of various colors.
Factory: Grand Rapids, Mich.
Statement signed: September 28, 1979.
Basis of claim: Appearing in.
Rate issued by Regional Commissioner of Customs: New York November 29, 1979.

(C) Company: Ampacet Corp.
Articles: Plastic color concentrates in pellet form.
Merchandise: Imported organic pigments.
Factories: Mount Vernon, N.Y.; Terre Haute, Ind.; DeRidder, La.
Statement signed: October 23, 1979.
Basis of claim: Used in.
Rate issued by Regional Commissioner of Customs: New York, November 2, 1979.

(D) Company: Biocon (U.S.) Inc.
Articles: Flavorings.
Merchandise: Imported enzymes and enzyme concentrates.
Factory: Lexington, Ky.
Statement signed: October 4, 1979.
Basis of claim: Used in.
Rate issued by Regional Commissioner of Customs: New York, December 3, 1979.

(E) Company: Bleim Steel Co.
Articles: Steel sheets, strips, and blanks.
Merchandise: Imported hot-rolled, cold-rolled, galvanized, and aluminized steel sheet.
Factory: Toledo, Ohio.
Statement signed: August 13, 1979.
Basis of claim: Appearing in.
Rate issued by Regional Commissioner of Customs: New York, October 15, 1979.

(F) Company: Cadillac Gage Co.
Articles: Armored cars, turrets, and armored cars with turrets.
Merchandise: Imported engines, tires, turrets weldments, and other component parts.
Factory: Cocoa, Fla.
Statement signed: September 10, 1979.
Basis of claim: Used in.
Rate issued by Regional Commissioner of Customs: Chicago, October 3, 1979.
Revokes: T.D. 55007-F, as amended by T.D. 67-202-C.

(G) Company: Chrysler Corp.
Articles: Passenger cars, trucks, parts, and assemblies thereof.
Merchandise: Imported engines, transmissions, radios, air-conditioners, heaters, tires, batteries, other vehicle parts, both finished and unfinished, and vehicle assemblies.
Factories: Various factories as set forth in manufacturer's statement.
Statement signed: July 20, 1979.
Basis of claim: Used in, less-valuable waste as to castings; Used in, remainder of imported merchandise.
Rate issued by Regional Commissioner of Customs: Chicago, September 14, 1979.
Revokes: T.D. 52282-M; T.D. 55088-H, as amended by 55634-A, 56514-E, and 67-66-0; T.D. 54395-A, as amended by 54446-A, 55035-B, 55844-P, and 56549-B; T.D. 47069-A, as amended by 47949-D, 48338-A, 49847-B, 50781-B, 51523-C, 51586-A, and 51753-A.

(H) Company: Contempra Industries, Inc.
Articles: CSA-approved electric barbecue grills.
Merchandise: Imported CSA-approved cordsets, item No. 03297.
Factory: Asbury Park, N.J.
Statement signed: October 23, 1979.
Basis of claim: Appearing in.
Rate issued by Regional Commissioner of Customs: New York, November 13, 1979.

(I) Company: Cummins Mid-States, Inc.
Articles: Diesel generator sets/systems and diesel power units.
Merchandise: Imported and/or drawback diesel engines.
Factory: Indianapolis, Ind.
Statement signed: September 18, 1979.
Basis of claim: Used in.

307-466—80——2

Rate issued by Regional Commissioner of Customs: Chicago, November 8, 1979.

(J) Company: E. I. du Pont de Nemours & Co.
Articles: Dyes—Sevron yellow R and sevron yellow R concentrated 200 percent.
Merchandise: Imported 2:4 demethoxy aniline.
Factories: Deepwater, N.J.; Manati, P.R.
Statement signed: October 4, 1979.
Basis of claim: Appearing in.
Amendment issued by Regional Commissioner of Customs: Baltimore, November 28, 1979.
Amends: T.D. 55755–A, as amended, to cover sevron yellow R concentrated 200 percent and additional factory at Manati, P.R.

(K) Company: FSI Corp.
Articles: Pressure vessels and acid process systems.
Merchandise: Imported PFA pressure vessel liners and PFA Teflon bowl liners.
Factory: Chaska, Minn.
Statement signed: October 25, 1979.
Basis of claim: Used in.
Rate issued by Regional Commissioner of Customs: Chicago, November 16, 1979.
Revokes: T.D. 79–268–E.

(L) Company: Fannon Metal Industries, Inc.
Articles: Photocopier assemblies.
Merchandise: Imported ceramic ferrite magnets.
Factory: Rochester, N.Y.
Statement signed: September 27, 1979.
Basis of claim: Appearing in.
Rate issued by Regional Commissioner of Customs: New York, November 29, 1979.

(M) Company: Foster Leather Co., Inc.
Articles: Pigment-colored and surface-textured leather.
Merchandise: Imported leather hides.
Factory: Salem, Mass.
Statement signed: September 18, 1979.
Basis of claim: Appearing in.
Rate issued by Regional Commissioner of Customs: New York, October 30, 1979.

(N) Company: Hoffmann-LaRoche Inc.
Articles: Thiamine hydrochloride and thiamine mononitrate.
Merchandise: Imported thiothiamine.
Factory, Nutley, N.J.
Statement signed: November 9, 1979.
Basis of claim: Used in.
Rate issued by Regional Commissioner of Customs: New York, November 29, 1979.

(O) Company: Honeywell, Inc.
Articles: Visitronic auto/focus modules for cameras.
Merchandise: Imported integrated circuit subassemblies.
Factory: Denver, Colo.
Statement signed: July 19, 1979.
Basis of claim: Appearing in.
Rate issued by Regional Commissioner of Customs: Chicago, September 17, 1979.

(P) Company: Intoximeters, Inc.
Articles: Alco-sensors.
Merchandise: Imported fuel cells.
Factory: St. Louis, Mo.
Statement signed: September 12, 1979.
Basis of claim: Used in.
Rate issued by Regional Commissioner of Customs: Chicago, October 3, 1979.

(Q) Company: Koehring Co.
Articles: Cranes, excavators, compactors, and stabilizers, and light construction equipment.
Merchandise: Imported gasoline and diesel engines, hydraulic motors, compactor machine parts, unfinished compactor machines, and crawler component parts.
Factories: Waverly, Iowa; Dayton and Springfield, Ohio; Chattanooga, Tenn. (2); Milwaukee and Port Washington, Wis.
Statement signed: August 20, 1979.
Basis of claim: Appearing in.
Rate issued by Regional Commissioner of Customs: Chicago, November 30, 1979.
Revokes: T.D. 79-268-N.

(R) Company: Marathon LeTourneau Co.
Articles: L-800 Letro loaders.
Merchandise: Imported Cummins diesel engines.

Factory: Longview, Tex.
Statement signed: November 16, 1979.
Basis of claim: Used in.
Rate issued by Regional Commissioner of Customs: Houston, December 11, 1979.

(S) Company: Merck & Co., Inc., Merck Chemical Manufacturing Division.
Articles: Ami-carbinol, amitriptyline, cypro carbinol, and cypro heptadine.
Merchandise: Imported phenylacetic acid and benzalphthaline.
Factory: Rahway, N.J.
Statement signed: October 1, 1979.
Basis of claim: Used in.
Rate issued by Regional Commissioner of Customs: New York, October 11, 1979.
Revokes: T.D. 72-116-C.

(T) Company: Middlesex Chemicals, Inc.
Articles: Fused, metallurgical-grade vanadium pentoxide powder.
Merchandise: Imported, fused, metallurgical-grade vanadium pentoxide flake.
Factory: Raritan, N.J.
Statement signed: October 19, 1979.
Basis of claim: Used in.
Rate issued by Regional Commissioner of Customs: New York, December 5, 1979.

(U) Company: The O'Brien Machinery Co.
Articles: Power-generating equipment (diesel and gas generator sets).
Merchandise: Imported gas and diesel engines; electrical generators; generator set control panels.
Factory: Downingtown, Pa.
Statement signed: November 15, 1979.
Basis of claim: Used in.
Rate issued by Regional Commissioner of Customs: Baltimore, December 4, 1979.

(V) Company: Panam Silk Mills, Inc.
Articles: Silk piece goods.
Merchandise: Imported silk yarn, thrown silk yarn, and/or Duppioni silk yarn, wound raw silk.
Factory: Wilkes-Barre, Pa.
Statement signed: October 25, 1979.

Basis of claim: Appearing in.
Rate issued by Regional Commissioner of Customs: New York, November 29, 1979.

(W) Company: Plessey Materials Corp., d.b.a. Plessey Electro-Products.
Articles: Electronic cow feeders.
Merchandise: Imported dials and potentiometers.
Factory: Los Angeles, Calif.
Statement signed: September 20, 1979.
Basis of claim: Appearing in.
Rate issued by Regional Commissioner of Customs: Los Angeles, October 11, 1979.

(X) Company: Thomas Industries, Inc., Power Air Division.
Articles: Portable paint sprayers.
Merchandise: Imported electrical cords and rubber bumpers.
Factories: Sheboygan, Wis. (2).
Statement signed: October 30, 1979.
Basis of claim: Appearing in.
Rate issued by Regional Commissioner of Customs: Chicago, November 16, 1979.

(Y) Company: Walter Motor Truck Co.
Articles: Positive-traction, aircraft crash, fire rescue vehicles.
Merchandise: Diesel engines, water foam tanks.
Factory: Voorheesville, N.Y.
Statement signed: October 4, 1979.
Basis of claim: Appearing in.
Rate issued by Regional Commissioner of Customs: New York, October 15, 1979.

(Z) Company: Westinghouse Electric Corp., Power Systems Co.
Articles: Steam turbine blades.
Merchandise: Imported, stainless-steel, turbine blade forgings.
Factories: Winston-Salem and Charlotte, N.C.; Lester, Pa.
Statement signed: November 15, 1979.
Basis of claim: Used in, less-valuable waste.
Rate issued by Regional Commissioner of Customs: New York, November 27, 1979.

(T.D. 80-24)

Bonds

Approval and discontinuance of carrier bonds, Customs form 3587

Bonds of carriers for the transportation of bonded merchandise have been approved or discontinued as shown below. The symbol "D" indicates that the bond previously outstanding has been discontinued on the month, day, and year represented by the figures which follow. "PB" refers to a previous bond, dated as represented by figures in parentheses immediately following, which has been discontinued. If the previous bond was in the name of a different company or if the surety was different, the information is shown in a footnote at the end of the list.

Dated: January 10, 1980.

Name of principal and surety	Date of bond	Date of approval	Filed with district director/area director/amount
ATSL, Inc., Building A, 10 Oregon Ave., Philadelphia, PA; motor carrier; Peerless Ins. Co. D 11/27/79	June 13, 1978	Aug. 15, 1978	Philadelphia, PA; $50,000
All Freight Transportation Co., Inc., 24 East Runyon St., Newark, NJ; motor carrier; St. Paul Fire & Marine Ins. Co.	Nov. 30, 1979	Nov. 30, 1979	Newark, NJ; $50,000
Atlantic Pipe Line Co., 260 S. Broad St., Philadelphia, PA; pipe line; Federal Ins. Co. D 10/15/79	Dec. 16, 1969	Jan. 22, 1970	Philadelphia, PA; $50,000
Brooks Transportation Inc., 3830 Kelley Ave., Cleveland, OH; motor carrier; Insurance Co. of North America (PB 12/26/78) D 12/27/79 [1]	Dec. 26, 1979	Dec. 27, 1979	Cleveland, OH; $50,000
C. H. Dredge & Co., Inc., (A UT Corp) 918 South 2000 West, Syracuse, UT; motor carrier; American Manufacturers Mutual Ins. Co.	Oct. 30, 1979	Dec. 12, 1979	San Francisco, CA; $25,000
Chesapeake Motor Lines, Inc., RFD #4, Box 231, Baltimore, MD; motor carrier; Fidelity & Deposit Co. of MD D 10/10/79	Apr. 6, 1968	Apr. 10, 1968	Baltimore, MD; $25,000
Chestnut Ridge Railway Co., Palmerton, PA; rail carrier; Fireman's Insurance Co. (PB 7/17/77) D 7/17/79 [2]	July 16, 1979	July 17, 1979	Philadelphia, PA; $50,000
L. G. DeWitt, Inc. (Florida), Pompano Beach, FL; motor carrier; The Home Indemnity Co. D 12/20/79	Nov. 28, 1969	July 1, 1970	Wilmington, NC; $25,000

See footnotes at end of table.

Name of principal and surety	Date of bond	Date of approval	Filed with district director/area director/amount
Export Import Service Co., Inc., 28065 Beverly Rd., Romulus, MI; freight forwarder; St. Paul Fire & Marine Ins. Co.	Nov. 1, 1979	Nov. 16, 1979	Detroit, MI; $50,000
Farruggio's Bristol and Phila. Auto Express, Inc., 1419 Radcliffe St., Bristol, PA; motor carrier; Reliance Ins. Co.	Oct. 5, 1979	Nov. 26, 1979	Philadelphia, PA; $50,000
Freight Consolidation Services, Inc., and Riteway Motor Freight Co., 2032 W. 79th St., Chicago, IL; motor carrier; Hartford Accident & Indemnity Co. D 12/13/79	Mar. 1, 1976	June 1, 1976	Chicago, IL; $35,000
Haulmark Transfer, Inc., P.O. Box 343, Cockeysville, MD; motor carrier; St. Paul Fire & Marine Ins. Co. D 2/4/79	Jan. 1, 1978	Jan. 30, 1978	Baltimore, MD; $50,000
Inman Freight System Inc., 321 N. Spring Ave., Cape Girardeau, MO; motor carrier; Reliance Ins. Co.	Dec. 11, 1979	Dec. 11, 1979	St. Louis, MO; $50,000
Marino Bros. Trucking Co., 3516 Newton Rd., Stockton, CA; motor carrier; Fidelity & Deposit Co. (PB 4/18/77) D 12/26/79 [3]	Apr. 18, 1979	Dec. 26, 1979	San Francisco, CA; $50,000
Masselink Brothers Trucking, 901 Freeman S.W., Grand Rapids, MI; motor carrier; St. Paul Fire & Marine Ins. Co	Nov. 6, 1979	Nov. 9, 1979	Detroit, MI; $50,000
Norfolk Shipbuilding & Drydock Corp., Foot of Liberty St., Norfolk, VA; motor carrier; Fidelity and Deposit Co.	Dec. 3, 1979	Dec. 18, 1979	Norfolk, VA; $25,000
Republic Van & Storage Co., Inc., P.O. Box 8615, Baltimore, MD; motor carrier; Insurance Co. of North America D 10/15/79	Nov. 3, 1975	Dec. 10, 1975	Baltimore, MD; $25,000
Service Transportation Co., 250 State Highway #3, Secaucus, NJ; motor carrier; The Home Indemnity Co. D 12/19/79	Aug. 12, 1975	Aug. 23, 1975	New York Seaport; $25,000
Stevens Line Co., P.O. Box #56, Yonge's Island, SC; water carrier; Insurance Company of North America	Aug. 20, 1979	Nov. 14, 1979	Charleston, SC; $50,000
Superior Transfer, Inc., 2669 Merchants Dr., Baltimore, MD; motor carrier; St. Paul Fire & Marine Ins. Co.	Dec. 7, 1979	Dec. 7, 1979	Baltimore, MD; $25,000
Trus Transport, Inc., 508 S. Airport Blvd., South San Francisco, CA; motor carrier; Peerless Ins. Co. (PB 10/14/77) D 11/24/79 [4]	Oct. 30, 1979	Dec. 19, 1979	San Francisco, CA; $25,000

See footnotes at end of table.

Name of principal and surety	Date of bond	Date of approval	Filed with district director/area director/amount
Wahl's Transfer, Inc., County & Johnson Streets, Suffolk, VA; motor carrier. Selected Risks Insurance Co. (FB 7/25/77) D 1/2/80[1]	Nov. 30, 1979	Jan. 2, 1980	Norfolk, VA; $25,000

[1] Surety is Travelers Indemnity Co.
[2] Surety is St. Paul Fire & Marine Ins. Co.
[3] Surety is Harbert Accident & Indemnity Co.
[4] Surety is Insurance Co. of North America
[5] Surety is Fidelity & Deposit Co. of MD

BON-3-03

DONALD W. LEWIS,
Director, Office of Regulations and Rulings.

(T.D. 80-25)

Fees for Vessel Services—Schedule of Navigation Fees, Section 4.98(a), Customs Regulations, Amended

TITLE 19—CUSTOMS DUTIES

CHAPTER I—U.S. CUSTOMS SERVICE

PART 4—VESSELS IN FOREIGN AND DOMESTIC TRADES

AGENCY: U.S. Customs Service, Department of the Treasury.

ACTION: Final rule.

SUMMARY: Recent legislation repealed several statutes under which Customs charged and collected fees for specific services provided to vessels by Customs officers. This legislation authorized the Secretary of the Treasury to establish a new schedule of fees to return to the Government the approximate costs of the services provided. This document (1) establishes a new fee schedule to be used for the remainder of 1980, and (2) amends the Customs Regulations to provide that a revised fee schedule will be published in December 1980, to be used by Customs in charging and collecting fees for services provided to vessels in 1981, and that a new fee schedule will be published in December of each year thereafter for services to be provided during the following year.

EFFECTIVE DATE: (30 days from the date of publication in the Federal Register).

FOR FURTHER INFORMATION CONTACT: Jerry Laderberg, Carriers, Drawback, and Bonds Division, U.S. Customs Service, 1301 Constitution Avenue NW., Washington, D.C. 20229; 202-566-5706.

SUPPLEMENTARY INFORMATION:

BACKGROUND

Public Law 95–410, the "Customs Procedural Reform and Simplification Act of 1978," approved October 3, 1978 (the act), repealed sections 2654, 4381, 4382, and 4383 of the Revised Statutes of the United States (19 U.S.C. 58; 46 U.S.C. 329, 330, and 333), the statutory authority under which Customs has been charging and collecting fees for specific services provided to vessels by Customs officers. These fees, designated as "Navigation Fees" in section 4.98(a), Customs Regulations (19 CFR 4.98(a)), were as follows:

Fee No. and description of services	A	B
1 Entry of vessel, including American, from foreign port (19 U.S.C. 58):		
(a) Less than 100 net tons	$1.50	
(b) 100 net tons and over	2.50	
2 Clearance of vessel, including American, to foreign port (19 U.S.C. 58):		
(a) Less than 100 net tons	1.50	
(b) 100 net tons and over	2.50	
3 Issuing permit to foreign vessel to proceed from district to district, and receiving manifest (46 U.S.C. 329, 330)	2.00	$0.10
4 Receiving manifest of foreign vessel on arrival from another district, and granting a permit to unlade (46 U.S.C. 329, 330)	2.00	.10
5 Receiving postentry (19 U.S.C. 58, 46 U.S.C. 330)	2.00	2.00
6 Receiving official bond not otherwise provided for (19 U.S.C. 58)	.40	
7 Certifying payment of tonnage tax for foreign vessels only (19 U.S.C. 58)	.20	.20
8 Furnishing copy of official document, including certified outward foreign manifest, and others not elsewhere enumerated (19 U.S.C. 58)	.20	.20

The fees in column A were those collectible on the Atlantic, Gulf, and Pacific coasts and on the Mississippi River and tributaries; those in column B were collectible on the northern, northeastern, and northwestern frontiers (Great Lakes, Lake Champlain, and St. Lawrence River).

Because these fees did not cover the costs of providing the services, section 214 of the act authorized the Secretary of the Treasury to establish a new schedule of fees to be charged and collected for furnishing these services. These fees are to be consistent with section 501 of the Independent Offices Appropriation Act, 1952 (31 U.S.C. 483a), the so-called user charges statute, which provides that the costs of specific services for private interests shall be reimbursed to the Government.

Interim action was required so that fees could be charged and collected for the services provided, pending the preparation and publication of a new fee schedule. In this regard, on October 12, 1978, Customs published a general notice in the Federal Register (T.D. 78–381; 43 F.R. 46962), which provided that until a new fee

schedule becomes effective, Customs would continue to charge and collect the fees presently set forth in section 4.98(a), Customs Regulations (19 CFR 4.98(a)), for services provided to vessels by Customs officers.

PROPOSED RULE

In accordance with section 214 of the act, on May 25, 1979, a notice of proposed rulemaking was published in the Federal Register (44 F.R. 30375).

1. The notice proposed a new schedule of fees which would become effective upon publication in the Federal Register as a Treasury decision and remain in effect for the remainder of calendar year 1979.

2. The notice also proposed to amend section 4.98(a), Customs Regulations (19 CFR 4.98(a)), by deleting the existing fee schedule and providing that a general notice will be published in the Federal Register and CUSTOMS BULLETIN in December 1979, setting forth a revised schedule of fees for specific services provided to vessels by Customs officers in 1980, and that a new schedule will be published in December of each year thereafter for services provided during the following year to reflect changes in the rate of compensation paid to the Customs officer performing the service. The revised fee schedule would be based upon the amount of time the average service requires of a Customs officer in the fifth step of GS–9.

The notice also set out (1) the amount of revenue raised in fiscal year 1978 for each service, (2) the estimated length of time in hours reflected in the proposed new fee schedule required by a Customs officer to accomplish each service, and (3) the proposed new schedule of fees, as follows:

Fee No. and description of services	Amount collected 1978	Estimated time in hours	Proposed new fee
1 Entry of vessel, including American, from foreign port:			
(a) Less than 100 net tons	$269,151	½	$5.90
(b) 100 net tons and over	(a) and (b)	1	11.90
2 Clearance of vessel, including American, to foreign port:			
(a) Less than 100 net tons	262,570	½	5.90
(b) 100 net tons and over	(a) and (b)	1	11.90
3 Issuing permit to foreign vessel to proceed from district to district, and receiving manifest	115,598	1	11.90
4 Receiving manifest of foreign vessel on arrival from another district, and granting a permit to unlade	109,091	1	11.90
5 Receiving post entry	81,410	½	5.90
6 Receiving official bond not otherwise provided for	388	¼	3.00
7 Certifying payment of tonnage tax for foreign vessels only	27,201	¼	3.00
8 Furnishing copy of official document, including certified outward foreign manifest, and others not elsewhere enumerated	3,710	1	11.90
Total	869,119		

EXPLANATION

Section 24.17(d), Customs Regulations (19 CFR 24.17(d)), provides that the reimbursable charge for regular compensation shall be computed in accordance with section 19.5(b), Customs Regulations (19 CFR 19.5(b)), which contains the computation of the rate per hour for regular pay. The charge shall be computed at a rate per hour equal to 137 percent of the hourly rate of regular pay of the particular employee, with an addition equal to any night pay differential actually payable under section 5545, title 5, United States Code. The ratio of the annual number of working hours charged to Customs appropriation to the net number of annual working days is 137 percent. Therefore, the hourly rate proposed to be utilized was $11.88, which was 137 percent of the hourly rate of pay of a Customs officer in the fifth step of GS–9.

It is indicated in the legislative history of Public Law 95–410 (H.Rept. No. 95–621, 95th Cong., 2d sess., 1978, p. 28), that the fees to be charged shall be based upon the amount of time the average service requires of a Customs officer in the third step of GS–11. However, Customs has determined that these services generally are provided by a Customs officer in the fifth step of GS–9 and will use this pay rate as the basis for calculating the fees.

The proposed fees were rounded off to the nearest tenth of a dollar. It also was proposed to eliminate the fees under column "B" in the present schedule. Fees under column "B" were collectible on the northern, northeastern, and northwestern frontiers (Great Lakes, Lake Champlain, and St. Lawrence River). Because Congress has repealed sections 329, 330, and 333 of title 46, and section 58, title 19, United States Code, and because the amount of the fee to be charged and collected is to be based on the amount of time required to provide the service and not on when or where the service is performed, Customs has determined that there was no reason to continue the distinction between column "A" and column "B" fees. The explanatory material presently set forth in paragraphs 4.98(b) through 4.98(h), Customs Regulations, remains unchanged, except where noted below under "Other changes."

Interested parties were given until June 25, 1979, to submit relevant data, views, or arguments regarding the proposals.

DISCUSSION OF COMMENTS

One commenter believes that the estimated periods of time required to accomplish some of the services are excessive, thereby inflating the fees. He suggests that the estimated periods of time required to perform several of the services be reduced.

Customs has reviewed the estimated periods of time reflected in the proposed new fee schedule as required to accomplish each service and determined that, based upon work measurement studies, these periods are accurate and represent the average length of time in hours for each designated service throughout all Customs regions.

The second commenter notes that the act authorized the Secretary of the Treasury to establish a new schedule of fees to return to the Government the approximate cost of each service rendered. However, the commenter objects to paying two charges when the service is performed on a reimbursable overtime basis. He states that in a reimbursable overtime situation, he would be required to pay the applicable charge specified in the proposed fee schedule, which now would be based upon the actual cost of the service rather than a flat statutory fee, as well as the reimbursable overtime compensation for the Customs officer performing the service.

Customs believes this comment has merit. Accordingly, a sentence has been added to proposed section 4.98(a) to provide that when a particular vessel service is performed for which reimburseable overtime compensation is applicable, the party requesting the service would pay only the applicable overtime charge, and not both the overtime charge and the fee specified in the fee schedule.

This same commenter believes that the new fee schedule, although supported by legislative authority, is discriminatory against vessels because no similar overtime reimbursable compensation fees are applicable to air commerce.

Under title 49, United States Code, section 1509(c), as amended, the "Secretary of the Treasury is authorized by regulations to provide for the application to civil aircraft of the laws and regulations relating to the entry and clearance of vessels * * * ." The Secretary has not exercised this authority in connection with the schedule of navigation fees in section 4.98, Customs Regulations. It is Customs opinion that although the Secretary has not elected to exercise this authority with respect to aircraft, he is not precluded from exercising similar authority relating to vessels. Customs does, however, intend to review again whether appropriate charges should be levied for services provided to aircraft.

OTHER CHANGES

Upon its own review, Customs has made an additional change in the proposed amendment:

The new fee schedule published in this document is effective 30 days after the date of its publication in the Federal Register and shall remain in effect for the remainder of 1980. Proposed section 4.98(a) therefore is amended to provide that a revised fee schedule will be

published in December 1980 (rather than 1979), to be used to charge and collect fees for services to be provided in 1981 (rather than 1980).

ACTION

After consideration of the comments received, and upon Customs own review, it has been decided to: (1) Adopt the fee schedule as proposed, with the changes set forth in this document:

Fee No.	Description of services	Fee
1	Entry of vessel, including American, from foreign port:	
	(a) Less than 100 net tons	$6.40
	(b) 100 net tons and over	12.70
2	Clearance of vessel, including American, to foreign port:	
	(a) Less than 100 net tons	6.40
	(b) 100 net tons and over	12.70
3	Issuing permit to foreign vessel to proceed from district to district, and receiving manifest	12.70
4	Receiving manifest of foreign vessel on arrival from another district, and granting a permit to unlade	12.70
5	Receiving post entry	6.40
6	Receiving official bond not otherwise provided for	3.20
7	Certifying payment of tonnage tax for foreign vessels only	3.20
8	Furnishing copy of official document, including certified outward foreign manifest, and others not elsewhere enumerated	12.70

This fee schedule is effective 30 days after publication in the Federal Register and shall remain in effect for the remainder of 1980.

The fees are calculated on the basis that the vessel services are provided by a Customs officer in the fifth step of GS–9. The hourly rate utilized is $12.72, thereby reflecting the change in the rate of compensation paid to a Customs officer of that grade performing the services effective October 7, 1979; and

(2) Amend section 4.98, Customs Regulations, as proposed with, the changes set forth in this document.

INAPPLICABILITY OF EXECUTIVE ORDER 12044

This document is not subject to the provisions of the Treasury Department directive (43 F.R. 52120) implementing Executive Order 12044, "Improving Government Regulations," because the subject matter was in process before May 22, 1978, the effective date of the directive.

DRAFTING INFORMATION

The principal author of this document was Charles D. Ressin, Regulations and Research Division, Office of Regulations and Rulings, U.S. Customs Service. However, personnel from other Customs offices participated in its development.

AMENDMENT TO THE REGULATIONS

Section 4.98, Customs Regulations (19 CFR 4.98), is amended as set forth below.

WILLIAM T. ARCHEY,
Acting Commissioner of Customs.

Approved: December 31, 1979.
RICHARD J. DAVIS,
Assistant Secretary of the Treasury.

PART 4—VESSELS IN FOREIGN AND DOMESTIC TRADES

Section 4.98(a), Customs Regulations (19 CFR 4.98(a)), is amended to read as follows:

§ 4.98 Navigation fees.

(a)(1) The Customs Service shall publish a general notice in the Federal Register and CUSTOMS BULLETIN in December of each year, beginning in December 1980, setting forth a revised schedule of navigation fees for the following services:

Fee No. and description of services

1 Entry of vessel, including American, from foreign port:
  (a) Less than 100 net tons.
  (b) 100 net tons and over.
2 Clearance of vessel, including American, to foreign port:
  (a) Less than 100 net tons.
  (b) 100 net tons and over.
3 Issuing permit to foreign vessel to proceed from district to district, and receiving manifest.
4 Receiving manifest of foreign vessel on arrival from another district, and granting a permit to unlade.
5 Receiving post entry.
6 Receiving official bond not otherwise provided for.
7 Certifying payment of tonnage tax for foreign vessels only.
8 Furnishing copy of official document, including certified outward foreign manifest, and others not elsewhere enumerated.

The published revised fee schedule shall remain in effect throughout the following year.

(2) The fees shall be calculated in accordance with sections 19.5(b) and 24.17(d). Customs Regulations (19 CFR 19.5(b), 24.17(d)), and be based upon the amount of time the average service requires of a Customs officer in the fifth step of GS–9.

(3) The party requesting a vessel service described in paragraph (a)(1) of this section for which reimbursable overtime compensation is payable under 19 U.S.C. 267 or 19 U.S.C. 1451 and section 24.16 of

this chapter shall pay only the applicable overtime charge, and not both the overtime charge and the fee specified in the fee schedule.

(4) The revised fee schedule shall be made available to the public in Customs offices.

(5) The respective fees shall be designated in correspondence and reports by the applicable fee number.

(R.S. 251, as amended, sec. 501, 65 Stat. 290; 92 Stat. 888 (19 U.S.C. 66, 31 U.S.C. 483a, Public Law 95–410).)

[Published in the Federal Register, Jan. 18, 1980 (45 F.R. 3570)]

(T.D. 80–26)

(19 CFR Parts 10, 11, 24, 127, 132, 141, 142, 143, 144, 151, 158, 159, 172, and 173)

Customs Regulations relating to the entry of merchandise, liquidation of entries, warehousing periods, and marking of bulk containers of alcoholic beverages, amended

AGENCY: U.S. Customs Service, Department of the Treasury.

ACTION: Final rule—correction.

SUMMARY: This document corrects several errors in T.D. 79–221, which amended the Customs Regulations to implement various aspects of Public Law 95–410, the "Customs Procedural Reform and Simplification Act of 1978," relating to the entry of imported merchandise, the liquidation of entries, warehousing periods, and the marking of bulk containers of alcoholic beverages.

EFFECTIVE DATE: Upon publication in the Federal Register.

FOR FURTHER INFORMATION CONTACT: Benjamin H. Mahoney, Entry Procedures and Penalties Division, Office of Regulations and Rulings, U.S. Customs Service, 1301 Constitution Avenue NW., Washington, D.C. 20229; 202–566–5778.

SUPPLEMENTARY INFORMATION:

BACKGROUND

Public Law 95–410, the "Customs Procedural Reform and Simplification Act of 1978," approved October 3, 1978, made significant changes in the Customs laws relating to the entry of imported merchandise, the liquidation of entries, warehousing periods, and the marking of bulk containers of alcoholic beverages. Final amendments to the Customs Regulations implementing these changes were pub-

lished as T.D. 79–221 in the Federal Register on August 9, 1979 (44 F.R. 46794).

This document corrects several errors in T.D. 79–221 as discussed below.

INAPPLICABILITY OF NOTICE AND DELAYED EFFECTIVE DATE PROCEDURES

Because this document is designed merely to correct errors in a previously published document amending the Customs Regulations, good cause is found for dispensing with the notice and delayed effective date provisions of 5 U.S.C. 552.

INAPPLICABILITY OF EXECUTIVE ORDER 12044

This document is not subject to the provisions of the Treasury Department directive (43 F.R. 52120) implementing Executive Order 12044, "Improving Government Regulations," because the document to which these corrections relate was in process before May 22, 1978, the effective date of the directive.

DRAFTING INFORMATION

The principal author of this document was Charles D. Ressin, Regulations and Research Division, U.S. Customs Service. However, personnel from other Customs offices participated in its development.

CORRECTIONS

In F.R. Document 79–24494 appearing as T.D. 79–221 in volume 44 of the Federal Register at page 46794 in the issue of Thursday, August 9, 1979:

1. On page 46813, in the first column, the first cross-reference in the second sentence of section 10.31(a)(1) should read "10.36," rather than "10.35."

2. On page 46813, in the second column, the reference to the footnote at the end of section 11.6(a) should read "19 U.S.C. 467.[3]" rather than "19 U.S.C. 467.[2]".

3. On page 46813, in the third column, item 2 should read:

"2. Footnote 3 to part II is amended to read as follows:

---

[3] The Secretary * * *"

4. On page 46815, in the first column, the first sentence of section 132.13(a)(1)(ii) should read:

"(ii) *Absolute.*—Absolute quota merchandise shall not be released under the immediate delivery procedure if the quota is nearing fulfillment." * * *

5. On page 46817, in the third column, the cross-reference in the last sentence of section 141.61(e)(1)(i) should read: "* * * prescribed in paragraph (f)(2) of this section * * *".

6. On page 46821, in the second column, below "PART 142—ENTRY PROCESS," the introductory language should read: "Part 142 is revised to read as follows: * * *".

7. On page 46823, in the first line of the third column, the word "delivered" should be substituted for the word "presented" in section 142.6(b).

8. On page 46824, in the third column, the cross-reference in the second sentence of section 142.16(a) relating to the time period to file documentation with the entry summary should read: "142.12(b)" rather than "142.3".

9. On page 46826, in the third column, in section 142.23, delete the period, and add "* * * or, for quota class merchandise, within the quota period, whichever expires first.".

(R.S. 251, as amended, sec. 624, 46 Stat. 759 (19 U.S.C. 66, 1624); Public Law 95-410 (October 3, 1978).)

WILLIAM T. ARCHEY,
Acting Commissioner of Customs.

Approved: January 7, 1980.
RICHARD J. DAVIS,
Assistant Secretary of the Treasury.

[Published in the Federal Register Jan. 21, 1980 (45 FR. 3901)]

(T.D. 80-27)

Foreign Currencies—Daily Rates for Countries Not on Quarterly List

Rates of exchange based on rates certified to the Secretary of the Treasury by the Federal Reserve Bank of New York for the Brazil cruzeiro, People's Republic of China yuan, Hong Kong dollar, Iran rial, Philippines peso, Singapore dollar, Thailand baht (tical) and Venezuela bolivar

The Federal Reserve Bank of New York, pursuant to section 522(c), Tariff Act of 1930, as amended (31 U.S.C. 372(c)), has certified buying rates for the dates and foreign currencies shown below. The rates of exchange, based on these buying rates, are published for the information and use of Customs officers and others concerned pursuant to part 159, subpart C, Customs Regulations (19 CFR 159, subpart C).

Brazil cruzeiro:

January 1, 1980	Holiday
January 2-7, 1980	$0.0235
January 8-11, 1980	.0228

307-466—80——4

People's Republic of China yuan:	
January 1, 1980	Holiday
January 2, 1980	$0. 666711
January 3–11, 1980	. 669389
Hong Kong dollar:	
January 1, 1980	Holiday
January 2, 1980	$0. 203335
January 3, 1980	. 202881
January 4, 1980	. 203666
January 7, 1980	. 203004
January 8, 1980	. 202963
January 9, 1980	. 203046
January 10, 1980	. 203417
January 11, 1980	. 203978
Iran rial:	
January 1, 1980	Holiday
January 2–11, 1980	Not available
Philippines peso:	
January 1, 1980	Holiday
January 2–8, 1980	$0. 1350
January 9–11, 1980	: 1355
Singapore dollar:	
January 1, 1980	Holiday
January 2, 1980	$0. 465766
January 3, 1980	. 464576
January 4, 1980	. 462963
January 7, 1980	. 463285
January 8, 1980	. 464037
January 9, 1980	. 464253
January 10, 1980	. 463499
January 11, 1980	: 463392
Thailand baht (tical):	
January 1, 1980	Holiday
January 2–11, 1980	$0. 0487
Venezuela bolivar:	
January 1, 1980	Holiday
January 2–11, 1980	$0. 2329

(LIQ-3-TRODE)

Dated: January 15, 1980.

DANIEL D. SULLIVAN
(For G. Scott Shreve, Acting
Director, Duty Assessment Division).

(T.D. 80-28)

Foreign Currencies—Quarterly List of Rates of Exchange

List of buying rates in U.S. dollars based upon rates certified to the Secretary of the Treasury by the Federal Reserve Bank of New York

The table below lists rates of exchange, in U.S. dollars for certain foreign currencies, which are based upon rates certified to the Secretary of the Treasury by the Federal Reserve Bank of New York under the provisions of section 522(c), Tariff Act of 1930, as amended (31 U.S.C. 372(c)), for the information and use of Customs Officers and others concerned pursuant to part 159, subpart C, Customs Regulations (19 CFR 159, subpart C).

QUARTER BEGINNING JANUARY 1, 1980, TO MARCH 31, 1980

Country	Name of currency	U.S. dollars
Australia	Dollar	$1.1080
Austria	Schilling	.080906
Belgium	Franc	.035881
Canada	Dollar	.857780
Denmark	Krone	.187459
Finland	Markka	.270709
France	Franc	.249066
Germany	Deutsche Mark	.583601
India	Rupee	.1250
Ireland	Pound	2.1510
Italy	Lira	.001249
Japan	Yen	.004194
Malaysia	Dollar	.459348
Mexico	Peso	.043764
Netherlands	Guilder	.528485
New Zealand	Dollar	.9850
Norway	Krone	.203625
Portugal	Escudo	.020121
Republic of South Africa	Rand	1.2090
Spain	Peseta	.015138
Sri Lanka	Rupee	.0643
Sweden	Krona	.241663

QUARTER BEGINNING JANUARY 1, 1980, TO MARCH 31, 1980—Cont.

Country	Name of currency	U.S. dollars
Switzerland	Franc	.633914
United Kingdom	Pound	2.2427

(LIQ-3-TRODE)

Dated: January 15, 1980.

DANIEL D. SULLIVAN
(For G. Scott, Shreve, Acting
Director, Duty Assessment Division).

Recent Unpublished Customs Service Decisions

The following listing of recent administrative decisions issued by the Office of Regulations and Rulings, U.S. Customs Service, and not otherwise published, is published for the information of Customs officers and the importing community. Although the decisions are not of sufficient general interest to warrant publication as Treasury decisions, the listing describes the issues involved and is intended to aid Customs officers and concerned members of the public in identifying matters of interest which recently have been considered by the Office of Regulations and Rulings.

A copy of any decision included in this listing, identified by its date and file number, may be obtained in a form appropriate for public distribution upon written request to the Office of Regulations and Rulings, attention: Legal Reference Area, room 2404, U.S. Customs Service, 1301 Constitution Avenue NW., Washington D.C. 20229. These copies will be made available at a cost to the requester of 10 cents per page. However, the Customs Service will waive this charge if the total number of pages copied is 10 or less.

Decisions listed in earlier issues of the CUSTOMS BULLETIN, through October 24, 1979, are available in microfiche format at a cost of $15.10 (15 cents per sheet of fiche). It is anticipated that additions to the microfiche will be made quarterly and subscriptions are available. Requests for the microfiche now available and for subscriptions should be directed to the Legal Reference Area. Subscribers will automatically receive updates as they are issued and will be billed accordingly.

Dated: January 9, 1980.

DONALD W. LEWIS,
Director, Office of Regulations and Rulings.

Date of decision	File No.	Issue
12-27-79	104240	Carrier control: Use of foreign-built, U.S.-documented crane barge to load and store cargo in U.S. port
12-20-79	104279	Vessel repair: Whether an American fish-processing vessel, operating under a certificate of registry with a restriction from engaging in the coastwise trade, is nonetheless subject to the provisions of the vessel repair statute
12-27-79	104286	Vessel repair: Whether a finding of casualty is warranted in the absence of specific evidence of the date and place of adverse weather conditions allegedly causing vessel damage
12-31-79	104386	Vessel repair: Whether the vessel repair statute is applicable to a particular undocumented military vessel
12-26-79	711467	Prohibited and restricted importations: Disposition of warehoused merchandise subject to patent exclusion order
12-21-79	711557	Prohibited and restricted importations: Switchblade knife
12-20-79	711732	Reliquidation: Time limits within which to produce a free entry document under 19 U.S.C. 1520(c)(1)
12-17-79	711916	Prohibited and restricted importations: Trademark infringement: corn starch
12-17-79	711991	Personal exemptions: Silk cocoons (812.10)
11-13-79	060728	Classification: Antibiotic (407.85, 437.32)
11-30-79	060817	Classification: Whether woven textile labels on blue jeans are ornamental

Decisions of the United States Customs Court

United States Customs Court

One Federal Plaza
New York, N.Y. 10007

Chief Judge

Edward D. Re

Judges

Paul P. Rao
Morgan Ford
Scovel Richardson
Frederick Landis
James L. Watson
Herbert N. Maletz
Bernard Newman
Nils A. Boe

Senior Judge

Samuel M. Rosenstein

Clerk

Joseph E. Lombardi

Customs Decisions

(C.D. 4835)

THE FLORSHEIM SHOE CO., DIVISION OF INTERCO, INC.; PLAINTIFF *v.* UNITED STATES, DEFENDANT

Court No. 76-1-00138

Leather

Finished leather claimed to be properly subject to duty at 5 per centum ad valorem under item 121.57, Tariff Schedules of the United States, as modified by T.D. 68-9, as "Leather * * * finished: * * * Not fancy: * * * Other," held properly classified as "Leather * * * finished: * * * Other: Calf and kip" and, as such, dutiable at 9 per centum ad valorem under item 121.30, Tariff Schedules of the United States, as modified by T.D. 68-9.

The evidence is inconclusive as to the determination point of calf or kip in both weight of the hide and the amount of square feet obtained therefrom of finished leather.

Leather is commingled when it contains merchandise of two different tariff characters and is subject to the provisions of general headnote 7.

Average size of commingled merchandise may not be utilized in determining the rate of duty applicable thereto. *Robinson-Wagner Co., Inc.* v. *United States*, 27 Cust. Ct. 158, C.D. 1363 (1951), *aff'd*, 40 CCPA 80, C.A.D. 501 (1952).

[Judgment for defendant.]

(Decided Jan. 2, 1980)

Barnes, Richardson & Colburn (*Robert E. Burke* and *Steven P. Sonnenberg* at the trial; *Thomas D. Terpstra* with them on the briefs) for the plaintiff.

Alice Daniel, Assistant Attorney General; *Joseph I. Liebman*, Attorney in Charge, Field Office for Customs Litigation (*Madeline B. Kuflik* at the trial and on the brief), for the defendant.

FORD, Judge: Plaintiff in this action is seeking to recover a portion of the duties paid on certain finished leather imported from France. The merchandise was classified as calf or kip leather under item 121.30, Tariff Schedules of the United States, as modified by T.D. 68-9, which provides for duty at the rate of 9 per centum ad valorem.

Plaintiff contends the leather is not calf or kip and consequently is subject to classification under item 121.57, Tariff Schedules of the United States, as modified by T.D. 68-9, which provides for duty at 5 per centum ad valorem.

The pertinent statutory provisions read as follows:

	Leather, in the rough, partly finished, or finished:
	* * * * * * *
	Other:
	Calf and kip:
121.30	Upper ..... 9% ad val.
	* * * * * * *
	Other:
	Not Fancy:
	* * * * * * *
121.57	Other ..... 5% ad val.

The record consists of the testimony of four witnesses called on behalf of plaintiff. Mr. Harry Hunt, in charge of the hides and skins department of Nick Bucher & Sons Co. of Chicago, has been in the business of curing hides since 1938. William Cartmill, executive vice president of the National Tanning & Trading Co. of Peabody, Mass.,

whose experience in the tanning industry started in 1955 when he was with A. C. Lawrence Leather Co., where he was a raw stock buyer. Mr. Joseph A. Bistany, vice president, raw material procurement, of the Florsheim Shoe Co., has been associated with that company for over 5 years His duties include purchasing of leather. Prior to his present employment, he was vice president, operations, of Barrett & Co , a calfskin tanner in Newark, N.J. Dr. Harland H. Young was employed by Swift & Co. in Chicago from 1932 to 1970. During this period of time he did research for the company which included curing of hides. Since 1970 he has done consulting work. The witness was active in the development of the brine-curing process.

Three witnesses were called on behalf of defendant. Mr. Vlastimil J. Surak, who for the past 25 years has been in the business of tanning in Chicago, has worked in the tanning industry in the United States and Czechoslovakia for a total of 38 years. Mr. Gustav Geisel, who is self-employed dealing in hides and skins in Chicago, has been in this field for 41 years. Mr. Milton Bailey is a civilian employed by the U.S. Navy since 1952 as a physical scientist. His duties include the development of standards relating to leather footwear for the U.S. Navy. Prior to his employment by the U.S. Navy, Mr. Bailey taught leather technology at the College of the City of New York and from 1946 to 1952 he was employed in a tannery.

Ten exhibits were received in evidence on behalf of plaintiff and 10 exhibits for defendant as well as the record in *Florsheim Shoe Company, Division of Interco, Inc.* v. *United States*, 71 Cust. Ct. 187, C.D. 4495 (1973). The official papers were also received in evidence without being marked. The court reserved ruling on defendant's exhibit H for identification. This exhibit will be received in evidence as defendant's exhibit H as an admission against interest.

At the outset of the trial, plaintiff abandoned all entries covered by the complaint except entries 219477 and 222905. Accordingly, claims as to all entries except the above having been abandoned are dismissed.

The record establishes the production of leather requires two separate processes, to wit: Curing and tanning. According to the witnesses involved in curing, most hides are bought on a New York-trim basis. The items are then put in various packs with granulated salt or brine and remain in such condition for 30 days. The salt is used to preserve the hide by making it bacteriologically stable which prevents putrification. Moisture is drawn out by the salt which causes a weight loss of the hide of approximately 11 percent to 14 percent. Plaintiff's exhibit 2, a cured hide, weighed approximately 26 pounds before curing. After curing, it weighed 22½ pounds which weight the Govern-

ment has agreed to be the weight of exhibit 2. This exhibit was withdrawn and illustrative exhibit 3, a photograph of exhibit 2, was received in evidence. A green hide or a wet hide are used synonymously and refer to an uncured hide. A cured hide is one that is biologically stable and which is ready for shipment or storage. The term "green salted" applies to the pack or pit curing, using salt on green hides without washing or fleshing.

Counsel have agreed that exhibit 4 is representative of the imported merchandise. The exhibit consists of a full skin which has been tanned Exhibit 5 is representative of the product described on the invoices as black box. Exhibits 6 and 7 represent merchandise known as smooth calf. Each piece of leather is marked with the size by the tanner which permits the purchaser to determine whether he has received the amount of leather ordered. The sizes stamped on exhibits 4, 5, 6, and 7 are 20¼ square feet, 22½ square feet, 20½ square feet, and 22½ square feet, respectively.

Photocopies of the adding machine tapes contained in exhibits 8 and 9 are copies of the tapes supplied by the tanner. Each bundle or pallet of skins has the tape attached to the top skin and represents the amount of square feet contained in the bundle or pallet.

The consensus of opinion with respect to the square footage of a 25-pound skin is that it would amount to less than 20 square feet. Cured hides are sold by the pound and finished or tanned leather is sold by the square foot. Yield is the amount of square feet of finished leather obtained from a cured hide. The testimony in respect to yield is contradictory since each tanner has his own process which may yield more or less square feet per hide.

Tanning was described by plaintiff's witness, Cartmill, as requiring soaking which in effect places the material back in the green state. A depilatory or hair remover is utilized to remove the hair from the skin. It is then baked, pickled, and tanned. After tanning, it is wrung out on a machine to eliminate some of the moisture. It is next shaved on the flesh side and is graded and colored. The material is subsequently dried by one of three methods. After drying, it is stacked to soften it into a more natural pliable form for finishing. The witness indicated that finishing a piece of leather is like finishing a piece of fine wood. The tanner might use one, two, three, or four coats. It is glazed by utilizing heat and friction to polish the skin. After completion of this process, it is trimmed and graded and packed for shipment.

The basic issue presented for determination is the cutoff point in weight of the hides and the square footage of the finished leather. Plaintiff contends the weight of 25 pounds or less is the recognized point as judicially determined in *Josaf Haberman* v. *United States*, T.D. 18739, G.A. 4052 (1897) and *Jos. Hecht & Sons* v. *United States*,

T.D. 19716, G.A. 4215 (1898). In the latter case, the findings of fact were as follows:

> (1) That the goods were all imported under the present tariff act of 1897, being assessed for duty under paragraph 437 of said act as "hides of cattle."
>
> (2) That the raw skins all weigh less than 25 pounds each, and are in fact raw calfskins, and were so commercially known in the trade of this country on and before July 24, 1897.
>
> (3) That the dry skins all weigh less than 12 pounds each.
>
> (4) That commercially the dividing line between raw cowhides and calfskins, in *weight*, is 25 pounds, the term "calfskins" including all so-called hides or skins which weigh less than 25 pounds. When *dry*, the dividing line is 12 pounds, all weighing *less* than 12 pounds being commercially known as skins, and all weighing 12 pounds or over as hides.

It is noted in the decision of the *Hecht* case that "[s]uch distinction has been recognized in the tariff legislation of Congress for more than 40 years."

With respect to the question of weight, while the testimony of plaintiff's witnesses and defendant's witness Surak agreed the 25-pounds-or-under designation applied to kip, defendant's witness Geisel considered a weight of 30 pounds to be kip. Bailey agreed to the 30-pound figure and his later testimony expanded the weight to 35 pounds for kip. This testimony of defendant's witnesses Geisel and Bailey appears to be based on their experience and the definitions contained in the ASTM designation D 1517-67, which was promulgated in 1967 and received in evidence as defendant's exhibit F, as well as defendant's exhibit I, the "Federal Test Method Standard," dated 1969. Defendant's exhibit E entitled "Military Standard Visual Inspection Guide for Footwear Upper Leather" (MIL-STD-663B), which was issued in 1971, indicates the square footage of calf and kip leather. Defendant, therefore, contends the weight and square footage has increased over the years and the importations are dutiable as classified.

It is to be noted that there is a difference of opinion as to the determination point of weight, as well as a lack of unanimity of opinion as to whether 20 square feet is the determination point for finished leather. This is due to the fact that the weight determination point according to the evidence may vary from under 25 to 35 pounds, thus resulting in various yields of square footage of the finished leather. In addition, the testimony with respect to tanning does not give a specific formula which may be utilized in determining the yield of the square footage of leather from the weight of the hide. The record further indicates that tanners utilize their own processes which may result in a yield of more or less square footage based upon the same weight.

Plaintiff further contends such distinction is presently recognized in the trade and that it has established a commercial designation. Where words used in tariff acts to designate particular kinds or classes of goods have well-known significance in the trade and commerce which differ from the common meaning, the commercial meaning prevails. *Maddock* v. *Magone*, 152 U.S. 368 (1894); *Jas. Akeroyd & Co. et al.* v. *United States*, 15 Ct. Cust. Appls. 440, T.D. 42641 (1928). Proof of commericial designation is a question of fact to be established in each case. *Daniel Green Shoe Co.* v. *United States* (*Trans World Shoe Corp., Party in Interest*), 58 Cust. Ct. 7, C.D. 2868, 262 F. Supp. 375 (1967), *appeal dismissed*, 54 CCPA 143. The record before the court fails to establish a commercial designation. It is incumbent upon the party alleging commercial designation to establish that such designation was definite, general, and uniform throughout the United States on or about the date of the enactment of the tariff legislation involved. *United States* v. *Armand Schwab & Co., Inc., et al.*, 30 CCPA 72, C.A.D. 218 (1942).

The second matter for determination is whether the imported leather, which arrived in bundles or pallets and contained leather both over and under 20 square feet, should be considered as claimed based upon the average size of the leather contained in the bundle or pallet. Plaintiff contends the average size of the leather contained in each bundle should be utilized since leather is dealt with in the trade based upon an average. Plaintiff also brings to the court's attention that the testimony relating to weight for calf or kip was given in a range of weight in which the witnesses indicated an average weight.

Defendant takes the position that merchandise which contains various sizes, over and under 20 square feet, is commingled. According to general headnote 7 of the Tariff Schedules of the United States, commingled merchandise is subject to the highest rate of duty applicable to such merchandise unless the merchandise is segregated. The pertinent portions of general headnote 7 provide as follows:

> 7. *Commingling of articles.*—(a) Whenever articles subject to different rates of duty are so packed together or mingled that the quantity or value of each class of articles cannot be readily ascertained by customs officers (without physical segregation of the shipment or the contents of any entire package thereof), by one or more of the following means:
>
> (i) sampling,
>
> (ii) verification of packing lists or other documents filed at the time of entry, or
>
> (iii) evidence showing performance of commerical settlement tests generally accepted in the trade and filed in such time and manner as may be prescribed by regulations of the Secretary of the Treasury,

> the commingled articles shall be subject to the highest rate of duty applicable to any part thereof unless the consignee or his agent segregates the articles pursuant to subdivision (b) hereof.

Assuming *arguendo* that the determination point in weight was 25 pounds or less and the square footage point was 20 square feet or less, since the merchandise contains under and over 20 square feet it is for tariff purposes commingled. It is further apparent that there has been no segregation of the merchandise and, therefore, it is dutiable at the highest rate applicable to the merchandise as prescribed by general headnote 7.

The question of utilizing averages was considered in *Robinson-Wagner Co., Inc.* v. *United States*, 40 CCPA 80, C.A.D. 501 (1952). In the *Robinson* case, certain wool grease was classified as wool grease suitable for medicinal use. The merchandise was imported in drums, some of which was of one tariff character, as classified, and some of another tariff character, wool grease containing 2 percent or less of free fatty acids and not suitable for medicinal use. The court in considering the question of average samples made the following observations:

> It will be remembered that the merchandise was imported in drums and from the record it is reasonable to believe that the contents of the individual drums differ in their chemical composition.
>
> It seems to us, as was argued by counsel for the Government, that if a drum of grease, such as was sampled by the Customs officials, were to be mixed with one or any number of drums containing less than the components and character of adeps lanae, the result of such composite sample would probably in some degree conform to the samples and analyses made by employees of appellant in their tests. Therefore, we agree with the reasoning in the decision of the trial court that the composite sample representing an average, must be of lesser quality than the contents of the drums which held the better quality of the shipment.

The Customs Court in its decision in the *Robinson* case, 27 Cust. Ct. 158, C.D. 1363 (1951), made the following pertinent observation which likewise applies to general headnote 7:

> We are not unmindful of the fact that the plaintiff may have ordered and expected to receive wool grease not suitable for medicinal use, and that the average of the entire shipment actually was just such wool grease. The fact is, however, that the shipment was packed in drums, and the evidence establishes that some of the drums contained wool grease of the highest class. The policy of the law in such cases is indicated by section 508 (Tariff Act of 1930), *supra*, and is to assess duty, not upon the average of the classes of merchandise in a shipment, but upon

the highest class thereof if the classes involved can be segregated and the segregation is not done.

Accordingly, in the absence of segregation, the merchandise was properly classified.

Judgment will be issued accordingly.

(C.D. 4836)

SOUTHERN AIR TRANSPORT, INC., PLAINTIFF *v.* UNITED STATES, DEFENDANT

Court No. 75-6-01590

Transportation Equipment (DC-6B Airplane)

AMERICAN GOODS RETURNED—CUSTOMS REGULATIONS—NON-COMPLIANCE

A Douglas DC-6B airplane imported at Miami, Fla., from Taiwan and classified in liquidation as entered under TSUS item 694.40 as a *used* or rebuilt airplane, *Held*, not classifiable as claimed under TSUS item 800.00 as a *product* of the United States or under TSUS item 807.00 as an *article assembled* with U.S. components where the importer failed to plead and prove compliance with or waiver of applicable Customs Regulations associated with duty-exempt entries, and the evidence establishes that the aircraft would not qualify for duty exemption by reason of modifications made abroad which increased its value, and by reason of the absence of *assembly abroad*.

[Dismissed.]

(Decided Jan. 4, 1980)

Howard, Poe & Bastian (*James H. Bastian* at the trial and on the brief) for the plaintiff.

Alice Daniel, Assistant Attorney General; *Joseph I. Liebman*, Attorney in Charge, Field Office for Customs Litigation (*Sidney N. Weiss* at the trial and on the brief), for the defendant.

RICHARDSON, Judge: This action involves the dutiable status of a Douglas DC-6B airplane bearing manufacturer's serial No. 44550 and U.S. Federal Aviation Administration registration No. N93459. The plane was imported at Miami, Fla., from Taiwan on October 1, 1973, and entered and classified in liquidation as a *used* or *rebuilt* airplane under TSUS item 694.40 at the duty rate of 5 *per centum ad valorem*. Plaintiff-importer claims that the aircraft should be classified under TSUS item 800.00 as a *product* of the United States not advanced in value or improved in condition, duty free, or, in the alternative, under TSUS item 807.00 as an *article* assembled abroad with U.S. components, with duty assessed only on the value of foreign labor.

The operative facts in the case are not in dispute. The record shows that the plane was purchased new from the Douglas Aircraft Co., Inc., in 1958 by Asiatic Aeronautical Co., Ltd. (AACL), later known as Air Asia Co., Ltd., for $1.6 million, and immediately exported to Taiwan, Republic of China, for use in the operation of a scheduled airline service of which AACL was part owner. For some 15 years the plane was operated as a combination passenger-light cargo aircraft in the Far East. In August 1973, the plane was acquired by plaintiff by purchase from Air America, Inc., the parent corporation of AACL, for $134,500. Plaintiff then expended some $44,611.50 in labor and material costs to have work performed on the plane in Taiwan, after which the plane was returned to the United States where it was entered as aforesaid.

Some of the work performed in Taiwan on the plane prior to importation entailed replacement of main cabin flooring with stronger flooring, replacement of fore and aft passenger doors in the main cabin with larger cargo doors which necessitated opening and modifying the fuselage to accommodate the larger doors, the removal of the overhead passenger hatrack in the main cabin, the removal of two toilets and a coatroom in the forward main cabin, the substitution of a bucket-type, portable toilet in the rear main cabin for the more sophisticated toilet originally installed there, and the substitution of a movable galley for the stationary galley and tray container storage area originally built into the main cabin.

The object of these modifications was said to be the preparation of the plane for a combination cargo-passenger service stateside with emphasis, insofar as cargo carrying capacity is concerned, on the carriage of larger, bulkier cargo on the main deck within existing payload limits. The modifications resulted in a reduction of the aircraft's passenger capacity from a 73-seat configuration to a 27-seat configuration.

The factual underpinnings in the case are amply covered by allegations in plaintiff's pleading. Noticeably absent from the amended complaint, however, is any reference to compliance with requisite Customs Regulations relative to item 800.00 or 807.00 entry. On the other hand, defendant alleged in an affirmative defense in its answer the fact of plaintiff's noncompliance with applicable Customs Regulations relating to an item 800.00 or 807.00 entry. And, at the conclusion of plaintiff's case, defendant moved to dismiss the action for "failure to state a prima facie case" (r. 89). The court reserved decision on the motion.

In its brief, plaintiff does not address itself to the matter of compliance with applicable Customs Regulations. And on this phase of the

case, defendant argues in its brief that compliance with appropriate Customs Regulations is a condition precedent to recovery under items 800.00 and 807.00, and asserts that plaintiff has not complied with the regulations. The court agrees with defendant.

Exemption from duty on imported merchandise in whole or in part is not absolute under the TSUS. Such an exemption is conditioned upon compliance with applicable Customs Regulations (general headnote 11, TSUS; headnote 1, schedule 8, TSUS; secs. 10.1 and 10.2 of the Customs Regulations (19 CFR secs. 10.1, 10.2)), unless compliance has been waived by the appropriate Customs official. Section 10.1 requires the filing of (1) a foreign shipper's declaration, (2) an owner's declaration on Customs form 3311, and (3) a district director's certificate of exportation on Customs form 3311, in connection with an item 800.00 entry. And section 10.2 requires the filing of (1) a foreign assembler's declaration, and (2) an owner's endorsement on the assembler's declaration, in connection with an item 807.00 entry. See *Maple Leaf Petroleum, Ltd.* v. *United States*, 25 CCPA 5, T.D. 48976 (1937). In the instant case, plaintiff neither pleaded nor proved compliance with or waiver of the documentary requirements of either section 10.1 or section 10.2 of the Customs Regulations. Plaintiff has not even addressed itself to the issue of regulatory compliance raised in defendant's affirmative defense, and also, by implication, on the motion to dismiss.

In fact, plaintiff has, in effect, undertaken to *bypass* the regulatory compliance issue when it made a *dutiable* entry of the aircraft. *Cf. McDonnell Douglas Corp.* v. *United States*, 75 Cust. Ct. 6, 13–14, C.D. 4604 (1975), *decided on rehearing*, 78 Cust. Ct. 92, C.D. 4692 (1977). However, plaintiff cannot properly assert its claim for duty exemption on the aircraft for the first time in court, absent a late filing of the requisite documents. See *Mattel, Inc.* v. *United States*, 82 Cust. Ct. 234, C.D. 4805 (1979), *appeals appending*, where there was an obligation to assert it initially at the administrative level. As our appellate court said in *Maple Leaf Petroleum, Ltd.*, *supra*, at page 9, "The party asking the special grant or favor (duty exemption), of course, would be required to make a showing of the essential facts required by the regulation to the collector at the time of entry and not in the way of evidence at some subsequent trial."

But even if the exemption supporting documents had been filed with the district director initially under an item 800.00 or 807.00 entry in accordance with the regulations, or their filing waived by the district director as he is now empowered to do under these regulations (see sec. 10.1 (d) and (g) of the Customs Regulations (19 CFR sec.

10.1 (d) and (g)), or subsequently filed with the court by leave of court under the late filing of documents provision, the court would be disinclined, as a matter of law, to accord the aircraft the duty exemption now sought by plaintiff here, given the facts of record concerning the extensive work performed on the aircraft in Taiwan prior to its departure for the United States on the voyage of importation.

Discounting the fact that the installation of cargo window bars in the main cabin of the plane was an item wholly of *foreign manufacture*, the contracting parties themselves regarded the installation of cargo doors and heavy flooring in the main cabin to be items of major importance. Thus, the contract read as to such items: "Such materials and drawings must meet USFAA standards for major alterations being accomplished in accordance with previously approved data (STC's)." And, although it is true that the aircraft possessed only residual value at the time of these alterations, and, further, that a number of facilities built into the aircraft for passenger convenience and comfort were simultaneously removed, i.e., galley and tray container storage, hatracks, toilets, and coatroom, the alterations, nevertheless, resulted in a change in condition which increased its residual value in the court's opinion.

The realities of the marketplace force the conclusion that the days for commercial passenger service for this vintage piston-engine, propeller-driven airplane were numbered even at the time of its acquisition by plaintiff. In the Far East, the plane had already been replaced in regularly scheduled commercial flights by a newer, larger aircraft, thus relegating it to unscheduled (supplemental) flights or charter service. Now, destined for service stateside after some 15 years of service abroad, the plane faced an even bleaker future here in competition for passenger service with jet aircraft in a jet-age, technology-oriented society. Hence, against this almost certain future, the alterations performed on the plane in Taiwan prior to its departure for the United States must be viewed as equipping it to perform a more useful cargo service here which was calculated to increase its earning capacity, and thereby postpone obsolescence. Obviously, therefore, the refurbished airplane had increased value which would disqualify it for item 800.00 treatment notwithstanding its domestic origin.

And neither would the aircraft qualify for item 807.00 treatment since it was never an *assembled article* within the meaning of that provision. From the time of its manufacture until it underwent modification in Taiwan the plane remained a complete and functional article of commerce. At best, only some of its existing parts and components, i.e., flooring and doors, were removed and replaced while

the plane was abroad. However, the plane itself was never *assembled* abroad from *fabricated components* of U.S. origin.

For the reasons stated, defendant's motion to dismiss is granted. Judgment will be entered herein accordingly.

Abstracts

Abstracted Protest Decision

DEPARTMENT OF THE TREASURY, *January 7, 1980.*

The following abstracts of decisions of the United States Customs Court at New York are published for the information and guidance of officers of the customs and others concerned. Although the decisions are not of sufficient general interest to print in full, the summary herein given will be of assistance to customs officials in easily locating cases and tracing important facts.

ROBERT E. CHASEN,
Commissioner of Customs.

DECISION NUMBER	JUDGE & DATE OF DECISION	PLAINTIFF	COURT NO.	ASSESSED	HELD	BASIS	PORT OF ENTRY AND MERCHANDISE
				Par. or Item No. and Rate	Par. or Item No. and Rate		
P80/1	Maletz, J. January 3, 1980	Shayne Knitwear, Inc.	75-7-01894	Item 772.30 12.5% (jackets) Item 382.78 2¢ per lb. + 32.5% (blouses and pants)	Item 772.30 12.5% Dutiable as entireties on basis of export value; said value is invoice unit price	J. C. Penny Purchasing Corporation v. U.S. (C.D. 4671)	New York Ladies 3-piece suits; entireties

DECISION NUMBER	JUDGE & DATE OF DECISION	PLAINTIFF	COURT NO.	ASSESSED	HELD	BASIS	PORT OF ENTRY AND MERCHANDISE
				Par. or Item No. and Rate	Par. or Item No. and Rate		
P80/2	Maletz, J. January 3, 1980	Shayne Knitwear, Inc.	75-7-01904	Item 382.58 37.5¢ per lb. + 20% (blouses, pants and dresses) Item 772.30 12.5% (jackets)	Item 772.30 12.5% Dutiable as entireties on basis of export value; said value is invoice unit price	J. C. Penny Purchasing Corporation v. U.S. (C.D. 4671)	New York Ladies 2-, 3-piece suits entireties
P80/3	Maletz, J. January 3, 1980	Shayne Knitwear, Inc.	76-1-00203	Item 772.30 12.5% (vests) Item 382.58 37.5¢ per lb. + 20% (blouses) Item 382.78 25¢ per lb. + 32.5% (pants)	Item 772.30 12.5% Dutiable as entireties on basis of export value; said value is invoice unit price	J. C. Penny Purchasing Corporation v. U.S. (C.D. 4671)	New York Ladies 3-piece suits; entireties
P80/4	Maletz, J. January 3, 1980	Shayne Knitwear, Inc.	76-9-02170	Item 791.75 6% (jackets) Item 382.78 25¢ per lb. + 32.5% (shirts) Item 382.58 37.5¢ per lb. + 20% (pants)	Item 791.75 6% Dutiable as entireties on basis of export value; said value is appraised value	J. C. Penny Purchasing Corporation v. U.S. (C.D. 4671)	New York Ladies 3-piece suits; entireties

P80/5	Maletz, J. January 4, 1980	Shayne Knitwear, Inc.	75-9-02421, etc.	Item 382.54 or 382.58 37.5¢ per lb. + 30%; or 37.5¢ per lb. + 20% (pants, blouses and dresses) Item 772.30 12.5% (jackets and skirts)	Item 772.30 12.5% Dutiable as entireties on basis of export value; said value is invoice unit price	J. C. Penney Purchasing Corporation v. U.S. (C.D. 4671)	New York Ladies 2-, 3-piece suits; entireties
P80/6	Maletz, J. January 4, 1980	Shayne Knitwear, Inc.	77-1-00111	Item 772.30 12.5% (jackets and pants) Item 382.58 37.5¢ per lb. + 20% (vests) Item 382.81 25¢ per lb. + 27.5% (shirts)	Item 772.30 12.5% Dutiable as entireties on basis of export value; said value is invoice unit price	J. C. Penney Purchasing Corporation v. U.S. (C.D. 4671)	New York Ladies sets and suits; entireties
P80/7	Maletz, J. January 4, 1980	Shayne Knitwear, Inc.	77-6-00071	Item 772.30 12.5% (jackets) Item 382.58 37.5¢ per lb. + 20% (pullovers)	Item 772.30 12.5% Dutiable as entireties on basis of export value; said value is invoice unit price	J. C. Penney Purchasing Corporation v. U.S. (C.D. 4671)	New York Ladies sets; entireties

DECISION NUMBER	JUDGE & DATE OF DECISION	PLAINTIFF	COURT NO.	ASSESSED	HELD	BASIS	PORT OF ENTRY AND MERCHANDISE
				Par. or Item No. and Rate	Par. or Item No. and Rate		
P80/8	Maletz, J. January 4, 1980	Shayne Knitwear, Inc.	77-7-01353	Item 772.30 12.5% (jackets, skirts, vests and pants) Item 382.58 or 382.54 37.5¢ per lb. + 20%; or 37.5¢ per lb. + 30% (pullovers)	Item 772.30 12.5% Dutiable as entireties on basis of export value; said value is invoice unit price	J. C. Penney Purchasing Corporation v. U.S. (C.D. 4671)	New York Ladies sets; entireties
P80/9	Maletz, J. January 4, 1980	Shayne Knitwear, Inc.	77-7-01354, etc.	Item 772.30 12.5% (skirts) Item 382.81 25¢ per lb. + 27.5% (blouses and scarves)	Item 772.30 12.5% Dutiable as entireties on basis of export value; said value is invoice unit price	J. C. Penney Purchasing Corporation v. U.S. (C.D. 4671)	New York Ladies sets; entireties

Decisions of the United States Customs Court

Abstracts

Abstracted Reappraisement Decision

DECISION NUMBER	JUDGE & DATE OF DECISION	PLAINTIFF	COURT NO.	BASIS OF VALUATION	HELD VALUE	BASIS	PORT OF ENTRY AND MERCHANDISE
R80/7	Re, C. J. January 3, 1980	American Express Company, a/c Bus & Truck Supply Company, et al.	R66/2278, etc.	Constructed value	$19,273.20, plus value determined on appraisement of components furnished to Bus and Car Co. without charge by Western Sales, Ltd., less amount of any damage allowed in appraisement, plus or minus any adjustments made on appraisement for components or parts added to or omitted from a particular shipment, and less value of components of U.S. origin	Agreed statement of facts	New Orleans Inter-city passenger buses

Appeal to U.S. Court of Customs and Patent Appeals

Appeal 80-9.—Westway Trading Corp. *v.* United States.—
RAW SUGER—EXEMPTION FROM INCREASED DUTY—DATE OF EXPORTATION—PRESIDENTIAL PROCLAMATION—SUMMARY JUDGMENT. Appeal from C.D. 4826.

In this case, plaintiff-appellant contests the duty imposed pursuant to item 155.20, Tariff Schedules of the United States, as modified by Presidential Proclamation 4463, on merchandise consisting of approximately 7,000 long tons of raw sugar exported from Peru and entered at the Port of Baltimore, Md., on November 2, 1976. The sugar was laden at the Port of Salaverry, Peru, on September 16–17, 1976. The vessel departed Salaverry on September 18 and proceeded to the Port of Pimentel, Peru, where additional sugar was laden. The vessel left Pimentel for the United States on October 5, 1976. Presidential Proclamation 4463 issued on September 21, 1976, increased the duty on sugar imported under item 155.20. Proclamation 4463 was modified by Presidential Proclamation 4466 on October 4, 1976, and provided that the provisions of Proclamation 4463 "* * * shall not be effective with respect to articles exported to the United States before 12:01 a.m. * * *, September 21, 1976, provided that such articles are entered or withdrawn from warehouse, for consumption on or before November 8, 1976."

Plaintiff claims that the departure of the vessel from Salaverry as distinguished from its subsequent departure from Pimentel constitutes the "date of exportation" to the United States as allegedly intended by Presidential Proclamation 4466 and, therefore, the sugar laden at Salaverry is exempt from any increased duty. Plaintiff predicates its claim upon a regulation and guideline issued on September 3, 1971, by the Commissioner of Customs to Regional Commissioners and District Directors of Customs providing: "Where goods are exported from the country of exportation by vessel, and where the vessel lades merchandise at two or more ports within that country, the date of exportation for each of the shipments shall be the date upon which the shipment left the port at which it was laden." This instruction was given in relation to language contained in additional duty order No. 3 is-

sued by the Secretary of the Treasury in delineating exemptions from the surtax assessed in Presidential Proclamation 4074. The language contained in order No. 3 was similar to that contained in Proclamation 4466.

The Customs Court found that it cannot be presumed that the President in promulgating Proclamation No. 4466 intended the language thereof to be interpreted in conformity with the regulations and instructions of the Commissioner of Customs under date of September 3, 1971; that the date of exportation is the time the merchandise actually leaves the country of exportation for the United States (19 CFR 152.1(c) 1976); and that plaintiff failed to rebut the presumption of correctness attaching to the determination of the District Director of Customs in the assessment of duty on the merchandise in question. Plaintiff's motion for summary judgment was denied; defendant's cross-motion for summary judgment was granted.

It is claimed that the Customs Court erred in granting defendant's cross-motion for summary judgment and denying plaintiff's motion for summary judgment; in failing to find that the President intended the language in Presidential Proclamation 4466 to have the same meaning as the same language under Presidential Proclamation 4074; in finding and holding contrary to law, contrary to well-established rules of statutory construction, and contrary to the intent of the law giver; and in not denying defendant's cross-motion for summary judgment, although finding an absence of explanatory guidance in the proceedings before the court.

International Trade Commission Notices

Investigations by the U.S. International Trade Commission

DEPARTMENT OF THE TREASURY

The appended notices relating to investigations by the U.S. International Trade Commission are published for the information of Customs officers and others concerned.

R. E. CHASEN,
Commissioner of Customs.

In the Matter of CERTAIN APPARATUS FOR THE CONTINUOUS PRODUCTION OF COPPER ROD	Investigation No. 337-TA-52

Notice of Request for an Advisory Opinion in Certain Apparatus for the Continuous Production of Copper Rod

On December 17, 1979, the U.S. International Trade Commission received a request from counsel for the Krupp respondents in the above-captioned case for an advisory opinion on certain aspects of the three cease and desist orders issued by the Commission on November 23, 1979, in conjunction with the final determination in investigation No. 337-TA-52. A copy of Krupp's December 17 letter, with confidential portions excised, has been placed in the public inspection file of the Commission.

The Commission believes that the issuance of any advisory opinion must fully take into account the public interest. The Commission therefore will allow 20 days from the date of issuance of this notice for members of the public to file written objections or comments regarding the advisory opinion requested. Such objections or comments shall be placed on the public record except for information for which confidentiality has been requested, with a showing of justification therefor, and

which the Commission with due regard to statutory restrictions, its rules, and the public interest has determined should not be made public. For the purposes of obtaining such comments or objections which are confidential, the protective order issued May 23, 1978, in connection with investigation No. 337–TA–52 shall continue in effect.

Upon receipt of any public comments and objections the Commission will determine if an advisory opinion is appropriate. The Commission will publish the contents of any such advisory opinion or reasons why such an advisory opinion would not be appropriate.

By order of the Commission.

Issued: January 4, 1980.

KENNETH R. MASON,
Secretary.

Index

U.S. Customs Service

Treasury decisions:
- Bonds: Carrier 80-24
- Customs Regulations, amended, section 4.98.(a) schedule of navigation fees 80-25
- Section 101.3, Customs Regulations, amended establishment of port of entry, Owensboro, Ky 80-22

Customs Regulations amended—correction document—T.D. 79-221 80-26
- Foreign currencies:
  - Daily certified rates; December 24-31, 1979 80-20
  - Rates which varied from quarterly rate; week of Dec. 24-31, 1979 80-21
  - Daily certified rates; January 1-11, 1980 80-27
  - Certified quarterly rates; January 1, 1980, to March 31, 1980 80-28

Synopses of drawback decisions 80-23
- Water tanks, stainless steel 80-23-A
- Bus seats 80-23-B
- Plastic color concentrates (pellet form) 80-23-C
- Flavorings 80-23-D
- Steel sheets, strips, and blanks 80-23-E
- Armored cars, turrets 80-23-F
- Cars, passenger, trucks, parts, etc 80-23-G
- Barbecue grills, electric 80-23-H
- Diesel generator sets/systems and diesel power units 80-23-I
- Dyes—Sevron yellow 80-23-J
- Pressure vessels, and acid process sytems 80-23-K
- Photocopier assemblies 80-23-L
- Leather, pigment-colored and surface-textured 80-23-M
- Thiamine hydrochloride and thiamine mononitrate 80-23-N
- Visitronic auto/focus modules for cameras 80-23-O
- Alco-sensors 80-23-P
- Cranes, excavators, compactors, and stabilizers, light construction equipment 80-23-Q
- Loaders, L-800 letro 80-23-R
- Amino-carbinol, amitriptyline, cypro carbinol, and cypro heptadine 80-23-S
- Vanasium pentoxide powder, fused metallurgical grade 80-23-T
- Generator sets, diesel and gas 80-23-U
- Piece goods, silk 80-23-V
- Feeders, electronic cow 80-23-W
- Paint sprayers, portable 80-23-X
- Rescue vehicles, fire 80-23-Y
- Turbine blades, steam 80-23-Z

Customs Court

Appeal to U.S. Court of Customs and Patent Appeals (p. —);
Appeal 80-9—Raw sugar; exemption from increased duty; date of exportation; Presidential proclamation; summary judgment
Airplane, used or rebuilt, C.D. 4836
American goods returned; customs regulations, noncompliance with, C.D. 4836
Calf or kid leather, C.D. 4835
Commercial designation; proof, C.D. 4835
Commingled:
Leather, C.D. 4835
Merchandise, average size of; rate of duty, C.D. 4835
Commingling of articles; TSUS, General Headnote 7, C.D. 4835
Common meaning v. commercial designation, C.D. 4835
Construction:
Code of Federal Regulations, title 19:
Sec. 10.1, C.D. 4836
Sec. 10.1(d), C.D. 4836
Sec. 10.1(g), C.D. 4836
Sec. 10.2, C.D. 4836
Customs Regulations:
Sec. 10.1, C.D. 4836
Sec. 10.1(d), C.D. 4836
Sec. 10.1(g), C.D. 4836
Sec. 10.2, C.D. 4836
Tariff Schedules of the United States:
General Headnotes and Rules of Interpretation:
Headnote 7, C.D. 4835
Headnote 11, C.D. 4836
Item 121.30, C.D. 4835
Item 121.57, C.D. 4835
Item 694.40, C.D. 4836
Item 800.00, C.D. 4836
Item 807.00 C.D. 4836
Schedule 8, headnote 1, C.D. 4836
Customs Regulations, noncompliance with; American goods returned, C.D. 4836
Douglas DC-6B airplane, C.D. 4836
Finished leather; Leather * * * finished: * * * Other: Calf and kip, C.D. 4835
Leather:
Calf or kip, C.D. 4835
Commingled, C.D. 4835
Leather * * * finished: * * *:
Not fancy: * * * Other, C.D. 4835
Other: Calf and kip; finished leather, C.D. 4835
Proof; commercial designation, C.D. 4835
Rate of duty; commingled merchandise, average size of C.D. 4835
TSUS, General Headnote 7; commingling of articles, C.D. 4835
Transportation equipment (DC-6B Airplane); used or rebuilt airplane, C.D. 4836
Used or rebuilt airplane; transportation equipment (DC-6B Airplane), C.D. 4836

FEB 7 1980 Item 950-D contin T 1.11/3:14/6 N.Y.

Customs Bulletin

Regulations, Rulings, Decisions, and Notices concerning Customs and related matters

and Decisions

of the United States Court of Customs and Patent Appeals and the United States Customs Court

308-892
350
9247

Vol. 14 FEBRUARY 6, 1980 No. 6

This issue contains

T.D. 80–29 through 80–34
C.A.D. 1240
Protest abstracts P80/10 through P80/15
Reap. abstracts R80/2 and R80/3
International Trade Commission Notice

THE DEPARTMENT OF THE TREASURY
U.S. Customs Service

NOTICE

The abstracts, rulings, and notices which are issued weekly by the U.S. Customs Service are subject to correction for typographical or other printing errors. Users may notify the U.S. Customs Service, Logistics Management Division, Washington, D.C. 20229, of any such errors in order that corrections may be made before the bound volumes are published.

For sale by the Superintendent of Documents, U.S. Government Printing Office, Washington, D.C. 20402. Price: $1.30 (single copy domestic); $1.65 (single copy foreign). Subscription price: $65.00 a year domestic; $81.25 a year foreign.

U.S. Customs Service

Treasury Decisions

(T.D. 80–29)

Manmade Fiber Textile Products—Restriction on Entry

Restriction on entry of manmade fiber textile products manufactured or produced in Taiwan

There is published below a directive of November 23, 1979, received by the Commissioner of Customs from the acting chairman, Committee for the Implementation of Textile Agreements, concerning restriction on entry of manmade fiber textile products in categories 638, 645, and 646 manufactured or produced in Taiwan. This directive amends, but does not cancel, that committee's directive of December 22, 1978 (T.D. 79–48).

This directive was published in the Federal Register on November 28, 1979 (44 F.R. 68008), by the committee.

(QUO–2–1)

Dated: January 18, 1980.

WILLIAM D. SLYNE
(For G. Scott Shreve, Acting
Director, Duty Assessment Division).

U.S. DEPARTMENT OF COMMERCE,
INDUSTRY AND TRADE ADMINISTRATION,
Washington, D.C., November 23, 1979.

Committee for the Implementation of Textile Agreements

COMMISSIONER OF CUSTOMS,
Department of the Treasury,
Washington, D.C.

DEAR MR. COMMISSIONER: This directive further amends, but does not cancel, the directive issued to you on December 22, 1978, from the chairman, Committee for the Implementation of Textile Agree-

ments, concerning imports into the United States of certain cotton, wool, and manmade fiber textile products, produced or manufactured in Taiwan.

Under the terms of the Arrangement Regarding International Trade in Textiles done at Geneva on December 20, 1973, as extended on December 15, 1977; pursuant to the Cotton, Wool and Man-Made Fiber Textile Agreement of June 8, 1978, as amended, concerning textile products exported from Taiwan; and in accordance with the provisions of Executive Order 11651 of March 3, 1972, as amended by Executive Order 11951 of January 6, 1977, you are directed further to amend, effective on November 28, 1979, the adjusted 12-month level of restraint established in the directive of December 22, 1978, for categories 638 and 645/646 to the following:

Category	*Amended 12-month level of restraint* [1]
638	1,353,991 dozen
645/646	3,581,720 dozen

The actions taken with respect to Taiwan and with respect to imports of manmade fiber textile products from Taiwan have been determined by the Committee for the Implementation of Textile Agreements to involve foreign affairs functions of the United States. Therefore, the directions to the Commissioner of Customs, which are necessary to the implementation of such actions, fall within the foreign affairs exception to the rulemaking provisions of 5 U.S.C. 553. This letter will be published in the Federal Register.

Sincerely,

PAUL T. O'DAY,
Acting Chairman, Committee for the Implementation of Textile Agreements.

(T.D. 80-30)

Cotton Textile Products—Restriction on Entry

Restriction on entry of cotton textile products manufactured or produced in Pakistan

There are published below directives of August 14 and August 29, 1979, received by the Commissioner of Customs from the acting chairman, Committee for the Implementation of Textile Agreements, concerning restriction on entry of cotton textile products in certain categories manufactured or produced in Pakistan. These directives amend, but do not cancel, that committee's directives of December 27, 1978, and July 13, 1979 (T.D. 79-45 and T.D. 79-271).

[1] The levels of restraint have not been adjusted to account for any imports after Dec. 31, 1978.

These directives were published in the Federal Register on August 17 and September 4, 1979 (44 F.R. 48314 and 44 F.R. 51635), by the committee.

(QUO-2-1)

Dated: January 18, 1980.

WILLIAM D. SLYNE
(For G. Scott Shreve, Acting
Director, Duty Assessment Division).

U.S. DEPARTMENT OF COMMERCE,
THE ASSISTANT SECRETARY FOR INDUSTRY AND TRADE,
Washington, D.C., August 14, 1979.

Committee for the Implementation of Textile Agreements

COMMISSIONER OF CUSTOMS,
Department of the Treasury,
Washington, D.C.

DEAR MR. COMMISSIONER: This directive amends, but does not cancel, the directives of December 27, 1978, and July 13, 1979, from the chairman of the Committee for the Implementation of Textile Agreements which directed you to prohibit, for the 12-month period beginning on January 1, 1979, and extending through December 31, 1979, entry into the United States for consumption and withdrawal from warehouse for consumption of certain cotton textile products, produced or manufactured in Pakistan.

Under the terms of the Arrangement Regarding International Trade in Textiles done at Geneva on December 20, 1973, as extended on December 15, 1977, pursuant to the Bilateral Cotton Textile Agreement of January 4 and 9, 1978, as amended between the Governments of the United States and Pakistan, and in accordance with the provisions of Executive Order 11651 of March 3, 1972, as amended by Executive Order 11951 of January 6, 1977, you are directed, effective on August 20, 1979, to amend the levels of restraint previously established for categories 313, 315, 341, and 363 to the following:

Category	*Amended 12-month level of restraint* [1]
313	57, 368, 330 square yards
315	30, 500, 000 square yards
341	137, 931 dozen
363	17, 433, 640 numbers

You are further directed to prohibit, effective on August 20, 1979,

[1] The levels of restraint have not been adjusted to account for any imports after Dec. 31, 1978.

and for the 12-month period which began on January 1, 1979, and extends through December 31, 1979, entry into the United States for consumption and withdrawal from warehouse for consumption of cotton textile products in categories 319, 320, 359, and 369, produced or manufactured in Pakistan, in excess of the following levels of restraint:

Category	*12-month level of restraint* [1]
319	11, 253, 470 square yards
320	13, 506, 621 square yards
359	456, 460 pounds
369	3, 248, 869 pounds

Cotton textile products in categories 319, 320, 359, and 369 that have been exported prior to January 1, 1979, shall not be subject to this directive.

Cotton textile products in categories 319, 320, 359, and 369 which have been released from the custody of the U.S. Customs Service under the provisions of 19 U.S.C. 1448(b) or 1484(a)(1)(A) prior to the effective date of this directive shall not be denied entry under this directive.

The actions taken with respect to the Government of Pakistan and with respect to imports of cotton textile products from Pakistan have been determined by the Committee for the Implementation of Textile Agreements to involve foreign affairs functions of the United States. Therefore, the directions to the Commissioner of Customs, which are necessary to the implementation of such actions, fall within the foreign affairs exception to the rulemaking provisions of 5 U.S.C. 553. This letter will be published in the Federal Register.

Sincerely,

ARTHUR GAREL,
Acting Chairman, Committee for the Implementation of Textile Agreements.

U.S. DEPARTMENT OF COMMERCE,
THE ASSISTANT SECRETARY FOR INDUSTRY AND TRADE,
Washington, D.C., August 29, 1979.

Committee for the Implementation of Textile Agreements

COMMISSIONER OF CUSTOMS,
Department of the Treasury,
Washington, D.C.

DEAR MR. COMMISSIONER: To facilitate implementation of the Bilateral Cotton Textile Agreement of January 4 and 9, 1978, as

[1] In category 369, all TSUSA numbers except 366.1855.

amended, between the Governments of the United States and Pakistan, it would be appreciated if you would correct the level of restraint established for category 369 in paragraph 1, page 2 of the directive of August 14, 1979, to include the following qualifying footnote, as footnote 2:

This letter will be published in the Federal Register.

Sincerely,

PAUL T. O'DAY,
Acting Chairman, Committee for the Implementation of Textile Agreements.

(T.D. 80-31)

Cotton and Manmade Fiber Textile Products—Restriction on Entry

Restriction on entry of cotton and manmade fiber textile products manufactured or produced in Haiti

There is published below a directive of November 7, 1979, received by the Commissioner of Customs from the acting chairman, Committee for the Implementation of Textile Agreements, concerning restriction on entry of cotton and manmade fiber textile products in various categories manufactured or produced in Haiti.

This directive was published in the Federal Register on November 14, 1979 (44 F.R. 65620), by the committee.

(QUO-2-1)

Dated: January 18, 1980.

WILLIAM D. SLYNE
(For G. Scott Shreve, Acting Director, Duty Assessment Division).

U.S. DEPARTMENT OF COMMERCE,
INDUSTRY AND TRADE ADMINISTRATION,
Washington, D.C., November 7, 1979.

Committee for the Implementation of Textile Agreements

COMMISSIONER OF CUSTOMS,
Department of the Treasury,
Washington, D.C.

DEAR MR. COMMISSIONER: Under the terms of the Arrangement Regarding International Trade in Textiles done at Geneva on December 20, 1973, as extended on December 15, 1977; pursuant to the

Bilateral Cotton, Wool and Man-Made Fiber Textile Agreement of August 17, 1979, between the Governments of the United States and Haiti; and in accordance with the provisions of Executive Order 11651 of March 3, 1972, as amended by Executive Order 11951 of January 6, 1977, you are directed to prohibit, effective on December 3, 1979, and for the 12-month period beginning on May 1, 1979, and extending through April 30, 1980, entry into the United States for consumption and withdrawal from warehouse for consumption of cotton and man-made fiber textile products in categories 331, 337, 340, 359, 632, 635, 637, 649, 651, and 652 in excess of the following levels of restraint:

Category	*12-month level of restraint* [1]	
331	533, 429	dozen pairs
337	85, 600	dozen
340	112, 500	dozen
359	695, 652	pounds
632	1, 630, 435	dozen pairs
635	130, 751	dozen
637	328, 638	dozen
649	992, 708	dozen
651	96, 154	dozen
652	500, 000	dozen

Textile products in the foregoing categories, produced or manufactured in Haiti, which have been exported to the United States prior to May 1, 1979, shall not be subject to this directive.

Textile products in the foregoing categories which have been released from the custody of the U.S. Customs Service under the provisions of 19 U.S.C. 1448(b) or 1484(a)(1)(A) prior to the effective date of this directive shall not be denied entry under this directive.

The levels of restraint set forth above are subject to adjustment pursuant to the provisions of the bilateral agreement of August 17, 1979, between the Governments of the United States and Haiti which provide, in part, that: (1) For the second and third agreement years, each specific limit shall be increased by 7 percent annually; (2) any specific ceiling may be exceeded in any agreement year by not more than 7 percent of its square yards equivalent total, provided that the amount of the increase is compensated for by an equivalent decrease in one or more specific limits; (3) specific limits may also be increased for carryover and carryforward up to 11 percent of the applicable category limit; and (4) administrative arrangements or adjustments may be made to resolve minor problems arising in the implementation of the agreement. Any appropriate future adjustments under the

[1] The levels of restraint have not been adjusted to reflect any imports after Apr. 30, 1979.

foregoing provisions of the bilateral agreement will be made to you by letter.

A detailed description of the textile categories in terms of TSUSA numbers was published in the Federal Register on January 4, 1978 (43 F.R. 884), as amended on January 25, 1978 (43 F.R. 3421), March 3, 1978 (43 F.R. 8828), June 22, 1978 (43 F.R. 26773), September 5, 1978 (43 F.R. 39408), January 2, 1979 (44 F.R. 94), March 22, 1979 (44 F.R. 17545), and April 12, 1979 (44 F.R. 21843).

In carrying out the above directions, entry into the United States for consumption shall be construed to include entry for consumption into the Commonwealth or Puerto Rico.

The actions taken with respect to Haiti and with respect to imports of cotton and manmade fiber textile products from Haiti have been determined by the Committee for the Implementation of Textile Agreements to involve foreign affairs functions of the United States. Therefore, the directions to the Commissioner of Customs, which are necessary to the implementation of such action, fall within the foreign affairs exception to the rulemaking provisions of 5 U.S.C. 553. This letter will be published in the Federal Register.

Sincerely,

PAUL T. O'DAY,
Acting Chairman, Committee for the Implementation of Textile Agreements.

(T.D. 80-32)

Cotton and Manmade Fiber Textile Products—Restriction and Entry

Restriction on entry of cotton and manmade fiber textile products manufactured or produced in the Dominican Republic

There is published below a directive of November 28, 1979, received by the Commissioner of Customs from the acting chairman, Committee for the Implementation of Textile Agreements, concerning restriction on entry of cotton and manmade fiber textile products in various categories manufactured or produced in the Dominican Republic.

This directive was published in the Federal Register on December 3, 1979 (44 F.R. 69317), by the committee.

(QUO-2-1)

Dated: January 18, 1980.

WILLIAM D. SLYNE
(For G. Scott Shreve, Acting Director, Duty Assessment Division).

308-892 O - 80 - 2

U.S. DEPARTMENT OF COMMERCE,
INDUSTRY AND TRADE ADMINISTRATION,
Washington, D.C., November 28, 1979.

Committee for the Implementation of Textile Agreements

COMMISSIONER OF CUSTOMS,
Department of the Treasury,
Washington, D.C.

DEAR MR. COMMISSIONER: Under the terms of the Arrangement Regarding International Trade in Textiles done at Geneva on December 20, 1973, as extended on December 15, 1977; pursuant to the Bilateral Cotton, Wool and Man-Made Fiber Textile Agreement of August 7 and 8, 1979, between the Governments of the United States and the Dominican Republic, and in accordance with the provisions of Executive Order 11651 of March 3, 1972, as amended by Executive Order 11951 of January 6, 1977, you are directed to prohibit, effective on December 4, 1979, and for the 12-month period beginning on June 1, 1979, and extending through May 31, 1980, entry into the United States for consumption and withdrawal from warehouse for consumption, of cotton and manmade fiber textile products in categories 340, 351, 639, and 649 in excess of the following levels of restraint:

Category	*12-month level of restraint*
340	122,000 dozen
351	163,462 dozen
639	275,000 dozen
649	1,500,000 dozen

Cotton and manmade fiber textile products in the foregoing categories produced or manufactured in the Dominican Republic, which have been exported to the United States prior to June 1, 1979, shall not be subject to this directive.

Cotton and manmade fiber textile products in the foregoing categories which have been released from the custody of the U.S. Customs Service under the provisions of 19 U.S.C. 1448(b) or 1484(a)(1)(A) prior to the effective date of this directive shall not be denied entry under this directive.

The levels of restraint set forth above are subject to adjustment pursuant to the provisions of the bilateral agreement of August 7 and 8, 1979, between the Governments of the United States and the Dominican Republic which provide, in part, that: (1) Specific limits may be exceeded by designated percentages to account for swing;

(2) specific limits may also be increased for carryover and carryforward up to 11 percent of the applicable category limit; and (3) administrative arrangements or adjustments may be made to resolve minor problems arising in the implementation of the agreement. Any appropriate future adjustments under the foregoing provisions of the bilateral agreement will be made to you by letter.

A detailed description of the textile categories in terms of TSUSA numbers was published in the Federal Register on January 4, 1978 (43 F.R. 884), as amended on January 25, 1978 (43 F.R. 3421), March 3, 1978 (43 F.R. 8828), June 22, 1978 (43 F.R. 26773), September 5, 1978 (43 F.R. 39408), January 2, 1979 (44 F.R. 94), March 22, 1979 (44 F.R. 17545), and April 12, 1979 (44 F.R. 21843).

In carrying out the above directions, entry into the United States for consumption shall be construed to include entry for consumption into the Commonwealth of Puerto Rico.

The actions taken with respect to the Government of the Dominican Republic and with respect to imports of cotton and manmade fiber textile products from the Dominican Republic have been determined by the Committee for the Implementation of Textile Agreements to involve foreign affairs functions of the United States. Therefore, the directions to the Commissioner of Customs, which are necessary to the implementation of such actions, fall within the foreign affairs exception to the rulemaking provisions of 5 U.S.C. 553. This letter will be published in the Federal Register.

Sincerely,

PAUL T. O'DAY,
Acting Chairman, Committee for the Implementation of Textile Agreements.

(T.D. 80-33)

Cotton, Wool, and Manmade Fiber Textile Products—Restriction on Entry

Restriction on entry of cotton, wool, and manmade fiber textile products manufactured or produced in Poland

There is published below a directive of November 23, 1979, received by the Commissioner of Customs from the acting chairman, Committee for the Implementation of Textile Agreements, concerning restriction on entry of cotton, wool, and manmade fiber textile products in various categories manufactured or produced in Poland. This directive amends, but does not cancel, that committee's directive of December 27, 1978 (T.D. 79-41).

This directive was published in the Federal Register on November 28, 1979 (44 F.R. 68007), by the committee.

(QUO-2-1)

Dated: January 18, 1980.

WILLIAM D. SLYNE
(For G. Scott Shreve, Acting
Director, Duty Assessment Division).

U.S. DEPARTMENT OF COMMERCE,
INDUSTRY AND TRADE ADMINISTRATION,
Washington, D.C., November 23, 1979.

Committee for the Implementation of Textile Agreements

COMMISSIONER OF CUSTOMS,
Department of the Treasury,
Washington, D.C.

DEAR MR. COMMISSIONER: This directive further amends, but does not cancel, the directive issued to you on December 27, 1978, by the chairman, Committee for the Implementation of Textile Agreements, concerning imports into the United States of certain cotton, wool, and manmade fiber textile products, produced or manufactured in Poland.

Under the terms of the Arrangement Regarding International Trade in Textiles done at Geneva on December 20, 1973, as extended on December 15, 1977; pursuant to the Bilateral Cotton, Wool and Man-Made Fiber Textile Agreement of January 9 and 12, 1978, as amended, between the Governments of the United States and the Polish People's Republic; and in accordance with the provisions of Executive Order 11651 of March 3, 1972, as amended by Executive Order 11951 of January 6, 1977, you are directed to prohibit, effective on December 3, 1979, and for the 12-month period beginning on January 1, 1979, and extending through December 31, 1979, entry into the United States for consumption and withdrawal from warehouse for consumption of cotton, wool, and manmade fiber textile products in categories 334, 338, 362, 363, 434, and 634, produced or manufactured in Poland, in excess of the following levels of restraint:

Category	*Amended 12-month level of restraint* [1]
334	160,049 dozen of which not more than 16,949 dozen shall be in all TSUSA num-

[1] The levels of restraint have not been adjusted to reflect any imports after Dec. 31, 1978.

Category	*Amended 12-month level of restraint*	
		bers in the category except TSUSA 380.0611
338	467, 872	dozen of which not more than 180,556 dozen shall be in TSUSA 380.0652
362	159, 420	numbers
363	3, 000, 000	numbers
434	4, 074	dozen
634	107, 797	dozen of which not more than 84,746 dozen shall be in TSUSA 380.0405, 380.8101, 380.8109, 380.8111, and 791.7460 and not more than 36,320 dozen shall be in TSUSA 376.5609, 380.0445, 380.5168, 380.8410, 380.8416, 380.8417, and 791.7471

Textile products in categories 362 and 363 which have been exported to the United States prior to January 1, 1979, shall not be subject to this directive.

Textile products in categories 362 and 363 which have been released from the custody of the U.S. Customs Service under the provisions of 19 U.S.C. 1448(b) or 1484(a)(1)(A) prior to the effective date of this directive shall not be denied entry under this directive.

The actions taken with respect to the Government of the Polish People's Republic and with respect to imports of cotton, wool, and manmade fiber textile products from Poland have been determined by the Committee for the Implementation of Textile Agreements to involve foreign affairs functions of the United States. Therefore, the directions to the Commissioner of Customs, which are necessary for the implementation of such actions, fall within the foreign affairs exception to the rulemaking provisions of 5 U.S.C. 553. This letter will be published in the Federal Register.

Sincerely,

PAUL T. O'DAY,
Acting Chairman, Committee for the Implementation of Textile Agreements.

(T.D. 80-34)

Wool Textile Products—Restriction on Entry

Restriction on entry of wool textile products manufactured or produced in Malaysia

There is published below a directive of November 19, 1979, received by the Commissioner of Customs from the acting chairman, Committee for the Implementation of Textile Agreements, concerning restriction on entry of wool textile products in categories 445 and 446 manufactured or produced in Malaysia. This directive amends, but does not cancel, that committee's directive of December 27, 1978 (T.D. 79-49).

This directive was published in the Federal Register on November 23, 1979 (44 F.R. 67204), by the committee.

(QUO-2-1)

Dated: January 18, 1980.

WILLIAM D. SLYNE
(For G. Scott Shreve, Acting
Director, Duty Assessment Division).

U.S. DEPARTMENT OF COMMERCE,
INDUSTRY AND TRADE ADMINISTRATION,
Washington, D.C., November 7, 1979.

Committee for the Implementation of Textile Agreements

COMMISSIONER OF CUSTOMS,
Department of the Treasury,
Washington, D.C.

DEAR MR. COMMISSIONER: On December 28, 1978, the chairman, Committee for the Implementation of Textile Agreements, directed you to prohibit entry for consumption, or withdrawal from warehouse for consumption, during the 12-month period beginning on January 1, 1979, and extending through December 31, 1979, of cotton, wool, and manmade fiber textile products in certain specified categories, produced or manufactured in the Republic of Korea, in excess of designated levels of restraint. The chairman further advised you that the levels of restraint are subject to adjustment.[1]

[1] The term "adjustment" refers to those provisions of the Bilateral Cotton, Wool and Man-Made Fiber Textile Agreement of Dec. 23, 1977, as amended, between the Governments of the United States and the Republic of Korea, which provide, in part, that: (1) Within the aggregate and applicable group limits, specific levels of restraint may be exceeded by designated percentages; (2) these same levels may be increased for carryover and carryforward up to 11 percent of the applicable category limit; (3) consultation levels may be increased within the aggregate and applicable group limits upon agreement between the two governments; and (4) administrative arrangements or adjustments may be made to resolve minor problems arising in the implementation of the agreement.

Under the terms of the Arrangement Regarding International Trade in Textiles done at Geneva on December 20, 1973, as extended on December 15, 1977, pursuant to paragraphs 8 and 9 of the Bilateral Cotton, Wool and Man-Made Fiber Textile Agreement of December 23, 1977, as amended, between the Governments of the United States and the Republic of Korea; and in accordance with the provisions of Executive Order 11651 of March 3, 1972, as amended by Executive Order 11951 of January 6, 1977, you are directed, effective on November 13, 1979, to amend the 12-month level of restraint established for wool textile products in category 433/4 to the following:

Category	*Amended 12-month level of restraint* [2]
433/434	17,180 dozen of which not more than 12,501 dozen shall be in category 433 and not more than 6,407 dozen shall be in category 434

[2] The levels of restraint have not been adjusted to reflect any imports after Dec. 31, 1978.

The action taken with respect to the Government of the Republic of Korea and with respect to imports of wool textile products from the Republic of Korea has been determined by the Committee for the Implementation of Textile Agreements to involve foreign affairs functions of the United States. Therefore, the directions to the Commissioner of Customs, being necessary to the implementation of such actions, fall within the foreign affairs exception to the rulemaking provisions of 5 U.S.C. 553. This letter will be published in the Federal Register.

Sincerely,

PAUL T. O'DAY,
Acting Chairman, Committee for the Implementation of Textile Agreements.

Decisions of the United States Court of Customs and Patent Appeals

(C.A.D. 1240)

ZWICKER KNITTING MILLS *v.* THE UNITED STATES, No. 79–20

1. CLASSIFICATION OF IMPORTS—U.S.-FABRICATED KNITTED GLOVE SHELLS

Customs Court decision rejecting importer-appellant's claim that it is entitled to duty allowance under TSUS item 807.00 for United States-fabricated knitted glove shells is affirmed.

2. ID.—ITEM 807.00 TSUS

Requirement of clause (a) of TSUS item 807.00 that component be "exported in condition ready for assembly without further fabrication" dictates that component be finished prior to exportation.

3. ID.

Knitted component is not finished until finishing stitches lock knitting loops and fix knitting so that it will not unravel.

4. *U.S.* v. *Baylis Brothers Co.*—DISTINGUISHED

Fact that knitted glove shells unfinished distinguishes them from dress fronts at issue in *United States* v. *Baylis Brothers Co.*

U.S. COURT OF CUSTOMS & PATENT APPEALS, January 17, 1980

APPEAL FROM U.S. CUSTOMS COURT, C.D. 4786

[Affirmed.]

Barnes, Richardson and Colburn, Attorneys of record for appellant, *Steven P. Sonnenberg*, of counsel.

Alice Daniel, Assistant Attorney General, *David M. Cohen*, Director, *Joseph I. Liebman*, Attorney in Charge, Field Office for Customs Litigation, *Susan Handler-Menahem*, Commercial Litigation Branch, attorneys of record for appellee.

[Oral argument on Oct. 3, 1979 by Steven P. Sonnenberg for appellant & Susan Handler-Menahem for appellee.]

Before MARKEY, *Chief Judge*, RICH, BALDWIN, and MILLER, *Associate Judges*, and WATSON,* *Judge*.

*The Honorable James L. Watson, U.S. Customs Court, sitting by designation.

WATSON, Judge.

[1] This is an appeal from the judgment of the U.S. Customs Court, 82 Cust. Ct. 34, C.D. 4786, 469 F. Supp. 727 (1979), which rejected the importer-appellant's claim that it is entitled to a duty allowance under item 807.00 of the Tariff Schedules of the United States (TSUS) for U.S.-fabricated knitted glove shells. We affirm.

Background

This appeal concerns importations of knitted gloves from Haiti. The pattern stitching of these gloves was done on knitting machines in the United States. However, since these machines could not close the glove fingers, the glove shells, i.e., the gloves in their open-fingered state, were sent to Haiti for further processing. In Haiti, the glove fingers were closed (tipped) by hand with a sewing needle. Essentially, this tipping operation consisted of passing a piece of yarn through the top row of loops left by the knitting machine, and then stitching across the top of the finger. After a few stay stitches, the yarn was trimmed, and the operation was repeated for another finger. Passing the yarn through the top row of loops before stitching across the top of the finger was necessary to lock the knitting loops, and thereby fix the knitting so that it would not unravel.[1]

The importer claims that it is entitled to a duty allowance under TSUS item 807.00 for the U.S.-made glove shells. TSUS item 807.00 provides:

Articles assembled abroad in whole or in part of fabricated components, the product of the United States, which (a) were exported in condition ready for assembly without further fabrication, (b) have not lost their physical identity in such articles by change in form, shape, or otherwise, and (c) have not been advanced in value or improved in condition abroad except by being assembled and except by operations incidental to the assembly process such as cleaning, lubricating, and painting.	A duty upon the full value of the imported article, less the cost or value of such products of the United States (see headnote 3 of this subpart).

The Customs Court held that the importer was not entitled to a duty-free allowance for the glove shells because conditions (a) and (c) of TSUS 807.00 had not been met. The court concluded that the tipping operation was a further fabrication and not an act of assembly. Therefore, it held that the glove shells were not "exported in condition ready for assembly without further fabrication" as required by clause (a). It also determined that tipping was not an operation incidental to

[1] For a more detailed description of the tipping operation see 82 Cust. Ct. at 37-8, 469 F. Supp. at 729-30.

308-892 O - 80 - 3

the assembly process. Thus, since the tipping operation advanced the value of glove shells, it held that the glove shells could not qualify as components which "have not been advanced in value or improved in condition abroad except by being assembled and except by operations incidental to the assembly process" as required by clause (c).

The Customs Court gave three separate bases for its conclusion that the tipping operation constituted a further fabrication and not an assembly. First, the court reasoned that tipping was an indispensable completion or finishing of the knitting process. Second, the court pointed out that the tipping operation constructed a portion of the glove that did not exist before, the fingertips. Third, the court explained that the cost of performing the tipping operation, in terms of both expense and labor, was a significant portion of the total cost of manufacturing the glove. The Customs Court cited this court's decision in *Rudolph Miles* v. *United States*, 65 CCPA 32, 567 F. 2d 979 (1978) as authority for looking at the relative cost of an operation in determining whether it is a further fabrication or an assembly.

The Customs Court distinguished the case at bar from *United States* v. *Baylis Brothers Co.*, 59 CCPA 9, C.A.D. 1026, 451 F. 2d 643 (1971). In *Baylis Brothers*, this court held that smocking, i.e., drawing thread through premarked holes in a dress front to create gatherings of materials or shirts, was an assembly since the operation merely consisted of joining together two components (a dress front and a piece of thread). The court noted that the dress fronts in *Baylis Brothers* differed from the glove shells here because the former were completely fabricated before smocking. Furthermore, it pointed out that no new portion of the dress front was made by smocking whereas tipping created fingertips.

On appeal, appellant-importer challenges the Customs Court determination that the tipping operation was a further fabrication rather than an act of assembly. Appellant argues that the case at bar is on all fours with *Baylis Brothers*. It contends that the court's conclusion that the glove shells were not completely knitted is not supported by the record. Pointing out that tipping is performed with a plain sewing needle, whereas knitting is done with knitting needles, appellant takes the position that because all that needed to be done with the knitting needles was completed in the United States, the knitting process was finished in the United States.

Appellant also disputes that the record provides a basis for comparing the cost of tipping with the total cost of the glove. Moreover, it maintains that there is no authority for relying on a relative cost factor here. In that regard, it asserts that the issue in *Rudolph Miles* was whether cutting holes in steel beams was incidental to the

assembly process and not whether this operation itself was an act of assembly.

Opinion

The questions presented in this appeal are: (1) Whether or not the glove shells were "exported in condition ready for assembly without further fabrication"? and (2) Whether or not the glove shells qualify as components which "have not been advanced in value or improved in condition abroad except by being assembled and except by operations incidental to the assembly process such as cleaning, lubricating, and painting"? **[2]** With regard to the first question, the parties appear to agree that the requirement that a component be "ready for assembly without further fabrication" dictates that the component be finished. We, therefore, turn our attention to the question of whether or not the knitted glove shells were exported in a finished condition.

Knitting is a process wherein loops of yarn are chained together to form a fabric. This chaining process involves three stages. First, starting stitches create a first row of loops on the knitting needles. Then, pattern stitches build new loops into old loops to form the knitted articles. Last of all, finishing stitches lock the last row of open loops and thereby fix the knitting so that it will not unravel.[2]

[3] In the case at bar, only the first two of these stages were performed in the United States. As Chief Judge Re pointed out, at the outset of the tipping operation the yarn had to be passed through the last row of loops left by the knitting machine, and without this step the glove shell would unravel. Thus, the third stage of knitting, the locking of the knitting loops did not occur until after the glove shells had been sent to Haiti. Since only two of the three stages in the knitting process were performed in the United States prior to exportation, we conclude that the glove shells were unfinished when they left the United States.

We reject appellant's argument, that because all that needed to be done on knitting needles was completed in the United States, the knitting process was finished in the United States. To determine whether a step was part of the knitting process by merely looking at the implement used would create a distinction between the locking of knitting loops by binding off with a knitting needle, and the locking of knitting loops by alternative finishing stitches that require a sewing needle. We think that such a distinction would exalt form over sub-

[2] See 13 Encyclopedia Britannica, "Knitting," Encyclopedia Britannica, Chicago, Ill., at 412-14 (1970); 10 Encyclopedia International, "Knitting," Grolier Inc., New York, N.Y., at 224-26 (1972); 11 The World Book Encyclopedia, "Knitting," World Book—Childcraft International Inc., Chicago, Ill., at 279-80 (1978); 16 Encyclopedia Americana, "Knitting," Americana Corp., New York, N.Y., at 488-90 (International Ed. 1977); 14 Funk & Wagnalls New Encyclopedia, "Knitting," Funk & Wagnalls Inc., New York, N.Y., at 423 (1972); J. Springer, "Creative Needlework," "Knitting," Westport Corp., N.Y., at 142-5 (1974).

stance, for regardless of the particular implement or the particular stitch used, the primary function of a finishing stitch is the same; that is, the finishing stitch locks the knitting loops in order to fix the knitting so that it will not unravel.

[4] The fact that the glove shells were unfinished when they were exported from the United States distinguishes them from the dress fronts at issue in the *Baylis Brothers* case. Although at first blush both cases seem to involve a similar joinder of two subcomponents; i.e., the joinder of the glove shell and the yarn in the case at bar, and the joinder of the dress front and the thread in *Baylis Brothers*, upon more careful analysis, it becomes apparent that the former joinder is necessary to finish a subcomponent, whereas the latter involves subcomponents that are already completed.

In *Baylis Brothers*, the manufacture of the dress fronts prior to exportation was described as follows:

> [D]resses are designed in plaintiff's design department. Piece goods, purchased from various sources of supply, are cut by electric cutting knives, and shipped to contracting factories for sewing.
>
> The front section of the dresses (plaintiff's illustrative exhibit 1–A), a piece of cotton broadcloth, is cut and stenciled by laying a paper stencil over the fabric and rubbing a brush across it, thereby producing a series of dots on the fabric. These stenciled pieces, along with sewing thread, are then shipped to the Barbados, British West Indies, for "smocking."

Baylis Brothers, Inc. v. *United States*, 60 Cust. Ct. 336, 340 C.D. 3383, 282 F. Supp. 79, 795 (1968), *aff'd* 56 CCPA 115, C.A.D. 964, 416 F. 2d 1383 (1969) (Record in earlier *Baylis Brothers* case incorporated into later *Baylis Brothers* case, *Baylis Brothers, Inc.* v. *United States*, 64 Cust. Ct. 256, C.D. 3987 (1970), *aff'd* 59 CCPA 9, C.A.D. 1026, 451 F. 2d 643 (1971), at 64 Cust. Ct. 256.)

From this description, it is clear that all essential stages in the production of the material used to make the dress fronts were performed before exportation of the dress front, unlike in the case at bar, wherein the locking of the knitting loops to fix the knitting from unraveling did not occur until after exportation. Thus, this court's holding in *Baylis Brothers* is not controlling.

Since all three conditions set forth in TSUS item 807.00 must be met for a U.S.-fabricated component to qualify for 807.00 treatment, we need not consider the second question presented by this appeal; i.e., whether or not the glove shells qualify as components which "have not been advanced in value or improved in condition abroad except by being assembled and except by operations incidental to the assem-

bly process such as cleaning, lubricating, and painting." Our determination that the glove shells were not "exported in condition ready for assembly without further fabrication" is a sufficient basis for affirming the Customs Court.

The judgment of the Customs Court is *affirmed*.

Decisions of the United States Customs Court

United States Customs Court

One Federal Plaza
New York, N.Y. 10007

Chief Judge

Edward D. Re

Judges

Paul P. Rao
Morgan Ford
Scovel Richardson
Frederick Landis
James L. Watson
Herbert N. Maletz
Bernard Newman
Nils A. Boe

Senior Judge

Samuel M. Rosenstein

Clerk

Joseph E. Lombardi

Abstracts

Abstracted Protest Decisions

DEPARTMENT OF THE TREASURY, *January 14, 1980.*

The following abstracts of decisions of the United States Customs Court at New York are published for the information and guidance of officers of the Customs and others concerned. Although the decisions are not of sufficient general interest to print in full, the summary herein given will be of assistance to Customs officials in easily locating case and tracing important facts.

ROBERT E. CHASEN,
Commissioner of Customs.

DECISION NUMBER	JUDGE & DATE OF DECISION	PLAINTIFF	COURT NO.	ASSESSED	HELD	BASIS	PORT OF ENTRY AND MERCHANDISE
				Par. or Item No. and Rate	Par. or Item No. and Rate		
P80/10	Re, C. J. January 7, 1980	Asea, Inc.	79-4-00607	Item 685.90 8.5% upon full value of articles	Items 685.90/806.20 8.5% upon value of repairs only; value of repairs is $1,800	Agreed statement of facts	New York American goods returned; detector cards
P80/11	Re, C. J. January 7, 1980	John A. Knowles & Sons, a/c Great House, Inc.	79-3-00447	Item 727.30 8.5% Item 727.35 5%	Duty free under GSP	Agreed statement of facts	Miami Merchandise classified as furniture and parts thereof; product of eligible beneficiary country
P80/12	Re, C. J. January 7, 1980	Maple Leaf Fish Co.	76-11-02553	Item 113.25 15%	Item 113.20 10%	Agreed statement of facts	Detroit Fish products; not in oil; blanched and quick frozen
P80/13	Ford, J. January 7, 1980	John V. Carr & Son, Inc.	79-4-00619	Items 807.00/692.35 5.5%	Item 692.30 Free of duty	Norman G. Jensen, Inc. v. U.S. (C.D. 4634, aff'd C.A.D. 1183)	Buffalo Log skidders imported from Canada, incorporating certain parts of U.S. manufacture assembled in Canada
P80/14	Watson, J. January 7, 1980	The Newman Import Co., dba The Newman Co.	77-6-00923	Item 389.60 25¢ per lb.+ 15%	Item A735.20 Free of duty	The Newman Importing Co., Inc. v. U.S. (C.D. 4648)	Los Angeles Tent flies which are parts of backpacking tents

DECISION NUMBER	JUDGE & DATE OF DECISION	PLAINTIFF	COURT NO.	ASSESSED	HELD	BASIS	PORT OF ENTRY AND MERCHANDISE
				Par. or Item No. and Rate	Par. or Item No. and Rate		
P80/15	Maletz, J. January 7, 1980	Shayne Knitwear, Inc.	78-1-00106	Item 382.58 37.5¢ per lb.+ 20% (blouses, pullovers and pants) Item 791.75 6% (jackets)	Item 791.75 6% Dutiable as entireties on basis of export value; said value is invoice unit price	J. C. Penney Purchasing Corporation v. U.S. (C.D. 4671)	New York Ladies 3-piece suits; entireties

Decisions of the United States Customs Court

Abstracts

Abstracted Reappraisement Decisions

DECISION NUMBER	JUDGE & DATE OF DECISION	PLAINTIFF	COURT NO.	BASIS OF VALUATION	HELD VALUE	BASIS	PORT OF ENTRY AND MERCHANDISE
R80/2	Re, C.J. January 7, 1980	Arriflex Corp. of America	76-2-00520	Export value	Invoice unit prices	Agreed statement of facts	New York Tape recorders and parts
R80/3	Re, C.J. January 7, 1980	K Mart Corporation	79-4-00081	Export value	$0.99 per pair	Agreed statement of facts	Savannah "Style B Code No. 47-14-10" footwear (28,008 pairs)

Judgment of the U.S. Customs Court in Appealed Case

JANUARY 8, 1980

APPEAL 79-1.—Indian Head, Inc. *v.* United States.—WHITE WOOL YARN—YARNS OF WOOL, OTHER—YARNS OF WOOL, COLORED—TSUS.—C.D. 4758 reversed April 26, 1979 (C.A.D. 1223).

International Trade Commission Notices

Investigations by the U.S. International Trade Commission

DEPARTMENT OF THE TREASURY

The appended notices relating to investigations by the U.S. International Trade Commission are published for the information of Customs officers and others concerned.

R. E. CHASEN,
Commissioner of Customs.

In the Matter of CERTAIN INCLINED-FIELD ACCELERATION TUBES AND COMPONENTS THEREOF	Investigation No. 337–TA–67

Notice of Cancellation of Prehearing Conference and Hearing

Notice is hereby given that a prehearing conference scheduled for January 10, 1980, and hearing scheduled for January 14, 1980 (44 F.R. 75738, December 21, 1979) are canceled.

The Secretary shall publish this notice in the Federal Register.

Issued: January 8, 1980.

JANET D. SAXON,
Administrative Law Judge.

731–TA–12 (Final) thru 731–TA–14 (Final)

Notice of Institution of Antidumping Investigations and Scheduling of Hearings

AGENCY: U.S. International Trade Commission.

ACTION: Institution of three antidumping investigations to determine whether with respect to the articles involved an industry in the United States is materially injured, or is threatened with material in-

jury, or the establishment of an industry in the United States is materially retarded, by reason of imports sold or likely to be sold at less than fair value.

EFFECTIVE DATE: January 1, 1980.

FOR FURTHER INFORMATION CONTACT: The supervisory investigator assigned by the Commission to the particular investigation for which the information is sought. The assignments of supervisory investigators and their telephone numbers at the Commission are designated below.

SUPPLEMENTARY INFORMATION: The Trade Agreements Act of 1979, section 102(b)(2), requires the Commission to conduct antidumping investigations in cases where on January 1, 1980, the Secretary of the Treasury has made a tentative determination, but not a final determination, under the Antidumping Act, 1921, as to the question of less-than-fair-value sales. Accordingly, the Commission hereby gives notice that, effective as of January 1, 1980, it is instituting the following investigations pursuant to section 735 of the Tariff Act of 1930, as added by title I of the Trade Agreements Act of 1979. These investigations will be subject to the provisions of part 207 of the Commission's Rules of Practice and Procedure (19 CFR 207, 44 F.R. 76457) and, particularly, subpart C thereof, effective January 1, 1980.

Written submissions.—Any person may submit to the Commission on or before the prehearing statement due date specified below for the relevant investigation a written statement of information pertinent to the subject matter of the investigation. A signed original and 19 true copies of such statements must be submitted.

Any business information which a submitter desires the Commission to treat as confidential shall be submitted separately and each sheet must be clearly marked at the top "Confidential business data." Confidential submissions must conform with the requirements of section 201.6 of the Commission's Rules of Practice and Procedure (19 CFR 201.6). All written submissions, except for confidential business data, will be available for public inspection.

Hearings.—The Commission has scheduled a hearing in each investigation on the date specified below. A report containing preliminary findings of fact prepared by the Commission's professional staff will be made available to all interested persons prior to the hearing. Any person's prehearing statement must be filed on or before the indicated date. All parties that desire to appear at the hearing and make oral presentations must file prehearing statements. For further information consult the Commission's Rules of Practice and Procedure, part 207, subpart C (44 F.R. 76457), effective January 1, 1980.

ANTIDUMPING INVESTIGATIONS

Invoice No.	Product/country	Tentative hearing date	Hearing location	Contact person
731-TA-12 (final).	Portable electric typewriters, provided for in TSUS item 676.05/ Japan.	Apr. 10, 1980	ITC Bldg., Washington, D.C.	Bruce Cates, 523-0368.
731-TA-13 (final).	Melamine in crystal form, provided for in TSUS item 425.10/ Austria.	Apr. 11, 1980	do	John MacHatton, 523-0439.
731-TA-14 (final).	Melamine in crystal form, provided for in TSUS item 425.10/ Italy.	do	do	Do.

By order of the Commission.
Issued: January 10, 1980.

KENNETH R. MASON,
Secretary.

Notice of Institution of Preliminary Antidumping Investigations and Scheduling of Conferences

AGENCY: U.S. International Trade Commission.

ACTION: Institution of eight preliminary antidumping investigations under section 733(a) of the Tariff Act of 1930 to determine whether with respect to the articles involved there is a reasonable indication that an industry in the United States is materially injured, or threatened with material injury, or the establishment of an industry in the United States is materially retarded, by reason of imports of the merchandise allegedly sold or likely to be sold at less than fair value.

EFFECTIVE DATE: January 1, 1980.

FOR FURTHER INFORMATION CONTACT: The supervisory investigator assigned by the Commission to the particular investigation for which the information is sought. The assignments of supervisory investigators and their telephone numbers at the Commission are designated below.

SUPPLEMENTARY INFORMATION: The Trade Agreements Act of 1979, section 102(b)(1), requires that the Commission conduct preliminary antidumping investigations in cases where on January 1, 1980, the Secretary of the Treasury has not made a preliminary determination under the Antidumping Act, 1921, as to the question of less-than-fair-value sales. Accordingly, the Commission hereby gives notice that, effective as of January 1, 1980, it is instituting the following investigations pursuant to section 733(a) of the Tariff Act of 1930, as added by title I of the Trade Agreements Act of 1979. These investigations will be subject to the provisions of part 207 of the Commission's

Rules of Practice and Procedure (19 CFR 207, 44 F.R. 76457) and, particularly, subpart B thereof, effective January 1, 1980.

Written submissions.—Any person may submit to the Commission on or before the date specified below for the relevant investigation a written statement of information pertinent to the subject matter of the investigation. A signed original and 19 true copies of such statements must be submitted.

Any business information which a submitter desires the Commission to treat as confidential shall be submitted separately and each sheet must be clearly marked at the top "Confidential business data." Confidential submissions must conform with the requirements of section 201.6 of the Commission's Rules of Practice and Procedure (19 CFR 201.6). All written submissions, except for confidential business data, will be available for public inspection.

Conferences.—The Director of Operations of the Commission has scheduled a conference in each investigation on the date specified below. Parties wishing to participate in a conference should contact the appropriate supervisory investigator designated below. It is anticipated that parties in support of the petition for antidumping duties and parties opposed to such petition will each be collectively allocated one hour within which to make an oral presentation at the conference. Further details concerning the conduct of the conference will be provided by the supervisory investigator.

PRELIMINARY ANTIDUMPING INVESTIGATIONS

Invoice No.	Product/country	Conference date	Conference location	Deadline for written submissions	Contact person
731-TA-4 (prelim.)	Countertop microwave ovens provided for in TSUS item 684.25/ Japan.	Jan. 28, 1980	ITC Bldg., Washington, D.C.	Jan. 31, 1980	Bruce Cates, 523-0368.
731-TA-5 (prelim.)	Rail passenger cars & parts thereof, however provided for in the TSUS, intended for use as original equipment in the U.S./ Italy.	Jan. 29, 1980	do	Feb. 1, 1980	Daniel Leahy, 523-1369.
731-TA-6 (prelim.)	Rail passenger cars & parts thereof, however provided for in the TSUS, intended for use as orignial equipment in the U.S./ Japan.	do	do	do	Do.
731-TA-7 (prelim.)	AC, polyphase electric motors, over 5 horsepower but not over 500 horsepower, provided for in TSUS items 682.41 through 682.50/ Japan.	Jan. 30, 1980	do	Feb. 4, 1980	Bruce Cates, 523-0368.

Invoice No.	Product/country	Conference date	Conference location	Deadline for written submissions	Contact person
731-TA-8 (prelim.)	Sodium hydroxide, in solution (liquid caustic soda), provided for in TSUS item 421.08/ Federal Republic of Germany.	Jan. 31, 1980	do	Feb. 5, 1980	John MacHatton, 523-0439.
731-TA-9 (prelim.)	Sodium hydroxide, in solution (liquid caustic soda), provided for in TSUS item 421.08/ France.	do	do	do	Do.
731-TA-10 (prelim.)	Sodium hydroxide, in solution (liquid caustic soda), provided for in TSUS item 421.08/Italy.	do	do	do	Do.
731-TA-11 (prelim.)	Sodium hydroxide, in solution (liquid caustic soda), provided for in TSUS item 421.08/ United Kingdom.	do	do	do	Do.

By order of the Commission.
Issued: January 9, 1980.

KENNETH R. MASON,
Secretary.

Notice of Institution of Preliminary Countervailing Duty Investigations and Scheduling of Conferences

AGENCY: U.S. International Trade Commission.

ACTION: Institution of two preliminary countervailing duty investigations under section 703(a) of the Tariff Act of 1930 to determine whether with respect to the articles involved there is a reasonable indication that an industry in the United States is materially injured, or is threatened with material or the establishment of an injury, industry in the United States is materially retarded, by reason of allegedly subsidized imported merchandise.

EFFECTIVE DATE: January 1, 1980.

FOR FURTHER INFORMATION CONTACT: The supervisory investigator assigned by the Commission to the particular investigation for which the information is sought. The assignments of supervisory investigators and their telephone numbers at the Commission are designated below.

SUPPLEMENTARY INFORMATION: The Trade Agreements Act of 1979, section 102(a)(1), requires the Commission to conduct pre-

liminary countervailing duty investigations in cases where on January 1, 1980, the Secretary of the Treasury has not made a preliminary determination under section 303 of the Tariff Act as to whether a bounty or grant is being paid or bestowed. Accordingly, the Commission hereby gives notice that, effective as of January 1, 1980, it is instituting the following investigations pursuant to section 703(a) of the Tariff Act of 1930, as added by title I of the Trade Agreements Act of 1979. These investigations will be subject to the provisions of part 207 of the Commission's Rules of Practice and Procedure (19 CFR 207, 44 F.R. 76457) and, particularly, subpart B thereof, effective January 1, 1980.

Written submissions.—Any person may submit to the Commission on or before the date specified below for the relevant investigation a written statement of information pertinent to the subject matter of the investigation. A signed original and 19 true copies of such statements must be submitted.

Any business information which a submitter desires the Commission to treat as confidential shall be submitted separately and each sheet must be clearly marked at the top "Confidential business data." Confidential submissions must conform with the requirements of section 201.6 of the Commission's Rules of Practice and Procedure (19 CFR 201.6). All written submissions, except for confidential business data, will be available for public inspection.

Conferences.—The Director of Operations of the Commission has scheduled a conference in each investigation on the date specified below. Parties wishing to participate in a conference should contact the appropriate supervisory investigator designated below. It is anticipated that parties in support of the petition for countervailing duties and parties opposed to such petition will each be collectively allocated 1 hour within which to make an oral presentation at the conference. Further details concerning the conduct of the conference will be provided by the applicable supervisory investigator.

PRELIMINARY COUNTERVAILING DUTY INVESTIGATIONS

Invoice No.	Product/country	Conference date	Conference location	Deadline for written submissions	Contact person
701-TA-3 (prelim.)	Frozen potato products, provided for in TSUS items 138.40 and 141.86/Canada.	Jan. 29, 1980	ITC Bldg., Washington, D.C.	Feb. 1, 1980	Robert Eninger 523-0312.
701-TA-20 (prelim.)	Chains and parts thereof, provided for in TSUS items 652.24, 652.27, 652.30, 652.33, and 652.35/Japan.	Feb. 1, 1980	do	Feb. 6, 1980	Lynn Featherstone, 523-1376.

By order of the Commission.
Issued: January 9, 1980.

KENNETH R. MASON,
Secretary.

701–TA–4 (Final) through 701–TA–19 (Final)

Notice of Institution of Countervailing Duty Investigations and Scheduling of Hearings

AGENCY: U.S. International Trade Commission.

ACTION: Institution of 16 countervailing duty investigations to determine whether with respect to the articles involved an industry in the United States is materially injured, or is threatened with material injury, or the establishment of an industry in the United States is materially retarded, by reason of subsidized imported merchandise.

EFFECTIVE DATE: January 1, 1980.

FOR FURTHER INFORMATION CONTACT: The supervisory investigator assigned by the Commission to the particular investigation for which the information is sought. The assignments of supervisory investigators and their telephone numbers at the Commission are designated below.

SUPPLEMENTARY INFORMATION: The Trade Agreements Act of 1979, section 102(a)(2), requires the Commission to conduct countervailing duty investigations in cases where on January 1, 1980, the Secretary of the Treasury has made a preliminary determination, but not a final determination, under section 303 of the Tariff Act as to whether a bounty or grant is being paid or bestowed. Accordingly, the Commission hereby gives notice that, effective as of January 1, 1980, it is instituting the following investigations pursuant to section 705 of the Tariff Act of 1930, as added by title I of the Trade Agreements Act of 1979. These investigations will be subject to the provisions of part 207 of the Commission's Rules of Practice and Procedure (19 CFR 207, 44 F.R. 76457) and, particularly, subpart C thereof, effective January 1, 1980.

Written submissions.—Any person may submit to the Commission on or before the prehearing statement due date specified below for the relevant investigation a written statement of information pertinent to the subject matter of the investigation. A signed original and 19 true copies of such statements must be submitted.

Any business information which a submitter desires the Commission to treat as confidential shall be submitted separately and each sheet must be clearly marked at the top "Confidential business data." Confidential submissions must conform with the requirements of section 201.6 of the Commission's Rules of Practice and Procedure (19 CFR 201.6). All written submissions, except for confidential business data, will be available for public inspection.

Hearings.—The Commission has scheduled a hearing in each investigation on the date specified below. A report containing preliminary findings of fact prepared by the Commission's professional staff will be made available to all interested persons prior to the hearing. Any person's prehearing statement must be filed on or before the indicated date. All parties that desire to appear at the hearing and make oral presentations must file prehearing statements. For further information consult the Commission's Rules of Practice and Procedure, part 207, subpart C (44 F.R. 76457), effective January 1, 1980.

COUNTERVAILING DUTY INVESTIGATIONS

Invoice No.	Product/country	Tentative hearing date	Hearing location	Contact person
701-TA-4 (final)	Taps, cocks, valves and similar devices, and parts thereof, provided for in TSUS items 680.14, 680.17, 680.19, 680.25, and 680.27/Italy	Apr. 2, 1980	ITC Bldg., Washington, D.C.	John MacHatton, 523-0439.
701-TA-5 (final)	Taps, cocks, valves and similar devices, and parts thereof, provided for in TSUS items 680.14, 680.17, 680.19, 680.25, and 680.27/Japan	do	do	Do.
701-TA-6 (final)	Viscose rayon staple fiber, provided for in TSUS item 309.43/Austria	Apr. 3, 1980	do	Vera Libeau, 523-0368.
701-TA-7 (final)	Weighing machinery & scales, provided for in TSUS items 662.26 and 662.30/Japan	Apr. 4, 1980	do	John MacHatton, 523-0439.
701-TA-8 (final)	Rifles, shotguns and combination shotguns and rifles, provided for in TSUS items 730.23 through 730.39 and parts of each of the foregoing, provided for in TSUS items 730.63 through 730.77/Brazil	Apr. 5, 1980	do	Bruce Cates, 523-0368.
701-TA-9 (final)	Malleable pipe fittings, of iron or steel, provided for in TSUS item 610.74/Japan	Apr. 7, 1980	do	Lynn Featherstone, 523-1376.
701-TA-10 (final)	Ferroalloys, provided for in TSUS items 606.24, 606.30, 606.36, 606.37 and 606.44/Brazil	Apr. 8, 1980	do	Daniel Leahy, 523-1369.
701-TA-11 (final)	Dextrines and soluble or chemically treated starches derived from corn starch, provided for in TSUS item 493.30/Belgium	Apr. 9, 1980	do	John MacHatton, 523-0439.

Invoice No.	Product/country	Tentative hearing date	Hearing location	Contact person
701-TA-12 (final)	Dextrines and soluble or chemically treated starches derived from corn starch, provided for in TSUS item 493.30/Denmark	do	do	Do.
701-TA-13 (final)	Dextrines and soluble or chemically treated starches derived from corn starch, provided for in TSUS item 493.30/Federal Republic of Germany	do	do	Do.
701-TA-14 (final)	Dextrines and soluble or chemically treated starches derived from corn starch, provided for in TSUS item 493.30/France	do	do	Do.
701-TA-15 (final)	Dextrines and soluble or chemically treated starches derived from corn starch, provided for in TSUS item 493.30/Ireland	do	do	Do.
701-TA-16 (final)	Dextrines and soluble or chemically treated starches derived from corn starch, provided for in TSUS item 493.30/Italy	do	do	Do.
701-TA-17 (final)	Dextrines and soluble or chemically treated starches derived from corn starch, provided for in TSUS item 493.30/Luxembourg	do	do	Do.
701-TA-18 (final)	Dextrines and soluble or chemically treated starches derived from corn starch, provided for in TSUS item 493.30/Netherlands	do	do	Do.
701-TA-19 (final)	Dextrines and soluble or chemically treated starches derived from corn starch, provided for in TSUS item 493.30/United Kingdom	do	do	Do.

By order of the Commission.
Issued: January 10, 1980.

KENNETH R. MASON,
Secretary.

701-TA-21 (Preliminary)

FRESH-CUT ROSES FROM THE NETHERLANDS

Notice of Institution of Preliminary Countervailing Duty Investigation and Scheduling of Conference

Investigation instituted.—Following receipt of a petition on January 3, 1980, filed on behalf of Roses Inc., a trade association of the U.S. rose-growing industry, the U.S. International Trade Commission on January 11, 1980, instituted a preliminary countervailing duty investigation under section 703(a) of the Tariff Act of 1930 to determine whether there is a reasonable indication that an industry in the

United States is materially injured, or is threatened with material injury, or the establishment of an industry in the United States is materially retarded, by reason of allegedly subsidized imports from the Netherlands of fresh-cut roses, provided for in item 192.19 of the Tariff Schedules of the United States. This investigation will be subject to the provisions of part 207 of the Commission's Rules of Practice and Procedure (19 CFR 207, 44 F.R. 76457) and, particularly, subpart B thereof, effective January 1, 1980.

Written submissions.—Any person may submit to the Commission on or before February 5, 1980, a written statement of information pertinent to the subject matter of the investigation. A signed original and 19 copies of such statements must be submitted.

Any business information which a submitter desires the Commission to treat as confidential shall be submitted separately and each sheet must be clearly marked at the top "Confidential business data." Confidential submissions must conform with the requirements of section 201.6 of the Commission's Rules of Practice and Procedure (19 CFR 201.6). All the written submissions, except for confidential business data, will be available for public inspection.

Conference.—The Director of Operations of the Commission has scheduled a conference in connection with the investigation for 10 a.m., e.s.t., on Thursday, January 31, 1980, at the U.S. International Trade Commission Building, 701 E Street NW., Washington, D.C. Parties wishing to participate in the conference should contact the supervisory investigator for the investigation, Mr. William Fry, 202-523-0242. It is anticipated that parties in support of the petition for countervailing duties and parties opposed to such petition will each be collectively allocated 1 hour within which to make an oral presentation at the conference. Further details concerning the conduct of the conference will be provided by the supervisory investigator.

Inspection of petition.—The petition filed in this case is available for public inspection at the Office of the Secretary, U.S. International Trade Commission, and at the New York City office of the U.S. International Trade Commission located at 6 World Trade Center.

Issued: January 14, 1980.

KENNETH R. MASON,
Secretary.

Term. Inv. AA1921-212: Institute Inv. 731-TA-1 (Final)
Term. Inv. AA1921-213: Institute Inv. 731-TA-3 (Final)
Term. Inv. AA1921-214: Institute Inv. 731-TA-2 (Final)

Notice of Termination of Investigations Conducted Under the Antidumping Act, 1921, and Institution of Antidumping Investigations and Scheduling of Hearings Under the Tariff Act of 1930

AGENCY: U.S. International Trade Commission.

ACTION: Termination of three antidumping investigations under the Antidumping Act, 1921, and reinstitution of those investigations under title VII of the Tariff Act of 1930 to determine whether with respect to the articles involved an industry in the United States is materially injured, or is threatened with material injury, or the establishment of an industry in the United States is materially retarded, by reason of imports sold or likely to be sold at less than fair value.

EFFECTIVE DATE: January 1, 1980.

FOR FURTHER INFORMATION CONTACT: The supervisory investigator assigned by the Commission to the particular investigation for which the information is sought. The assignments of supervisory investigators and their telephone numbers at the Commission are designated below.

SUPPLEMENTARY INFORMATION: The Trade Agreements Act of 1979, section 102(c), requires the Commission to conduct antidumping investigations in cases where on January 1, 1980, the Commission is conducting an investigation under section 201(a) of the Antidumping Act, 1921, as to whether an industry in the United States is being, or is likely to be injured, or prevented from being established. Accordingly, the Commission hereby gives notice that, effective January 1, 1980, it is terminating the investigations under the Antidumping Act indicated in the first column below and is instituting the new investigations indicated in the second column with respect to the products described in the third column pursuant to section 732(b) of the Tariff Act of 1930, as added by title I of the Trade Agreements Act of 1979. These new investigations will be subject to the provisions of part 207 of the Commission's Rules of Practice and Procedure (19 CFR 207, 44 F.R. 76457) and, particularly, subpart C thereof, effective January 1, 1980.

Written submissions.—Any person may submit to the Commission on or before the prehearing statement due date specified below for the relevant investigation a written statement of information pertinent to the subject matter of the investigation. A signed original and 19 true copies of such statements must be submitted.

Any business information which a submitter desires the Commission to treat as confidential shall be submitted separately and each sheet must be clearly marked at the top "Confidential business data." Confidential submissions must conform with the requirements of section 201.6 of the Commission's Rules of Practice and Procedure (19 CFR 201.6). All written submissions, except for confidential business data, will be available for public inspection.

Hearings.—The Commission has scheduled a hearing in each

investigation on the date specified below. A report containing preliminary findings of fact prepared by the Commission's professional staff will be made available to all interested persons prior to the hearing. Any person's prehearing statement must be filed on or before the indicated date. All parties that desire to appear at the hearing and make oral presentations must file prehearing statements. For further information, consult the Commission's Rule of Practice and Procedures, part 207, subpart C (44 F.R. 76457), effective January 1, 1980.

PENDING ANTIDUMPING INVESTIGATIONS

Invoice No. before Jan. 1, 1980	Invoice No. after Jan. 1, 1980	Product/country	Pre-hearing report to parties	Deadline for pre-hearing statements from parties	Hearing date	Hearing location	Contact person
AA1921-212	731-TA-1 (final).	Spun yarn of acrylic, provided for in TSUS item 310.50/Japan	Jan. 8, 1980.	Jan. 17, 1980.	Jan. 22, 1980.	ITC Bldg., Washington, D.C.	Lynn Featherstone, 523-1376.
AA1921-211	731-TA-2 (final).	Spun yarn of acrylic, provided for in TSUS item 310.50/Italy	...do....	...do....	...do....	.....do.....	Do.
AA1921-213	731-TA-3 (final).	Sugars and sirups, provided for in TSUS items 155.20 and 155.30/Canada	Jan. 25, 1980.	Feb. 7, 1980.	Feb. 13, 1980.	.....do.....	William Fry, 523-0242.

By order of the Commission.
Issued: January 14, 1980.

KENNETH R. MASON,
Secretary.

Terminate Inv. 303–TA–11: Institute Inv. 701–TA–1 (Final)
Terminate Inv. 303–TA–12: Institute Inv. 701–TA–2 (Final)

Notice of Termination and Reinstitution of Investigations Under Section 303 of the Tariff Act in Accordance With the Trade Agreements Act of 1979

AGENCY: U.S. International Trade Commission.

ACTION: Termination of two countervailing duty investigations under section 303 of the Tariff Act of 1930 and reinstitution of those investigations under title VII of that act to determine whether with respect to the articles involved an industry in the United States is

materially injured, or is threatened with material injury, or the establishment of an industry in the United States is materially retarded, by reason of subsidized imported merchandise.

EFFECTIVE DATE: January 1, 1980.

FOR FURTHER INFORMATION CONTACT: The supervisory investigator assigned by the Commission to the particular investigation for which the information is sought. The assignments of supervisory investigators and their telephone numbers at the Commission are designated below.

SUPPLEMENTARY INFORMATION: The Trade Agreements Act of 1979, section 102(c), requires the Commission to conduct countervailing duty investigations in accordance with the provisions of title I of that act in cases where on January 1, 1980, the Commission is conducting an investigation under section 303 of the Tariff Act as to whether an industry in the United States is being, or is likely to be injured, or prevented from being established. Accordingly, the Commission hereby gives notice that, effective January 1, 1980, it is terminating the investigations under section 303 indicated in the first column below and is instituting the new investigations indicated in the second column with respect to the products described in the third column pursuant to section 705(b) of the Tariff Act of 1930, as added by title I of the Trade Agreements Act of 1979. These new investigations will be subject to the provisions of part 207 of the Commission's Rules of Practice and Procedure (19 CFR 207, 44 F.R. 76457) and, particularly, subpart C thereof, effective January 1, 1980.

Written submissions.—Any person may submit to the Commission on or before the prehearing statement due date specified below for the relevant investigation a written statement of information pertinent to the subject matter of the investigation. A signed original and 19 true copies of such statements must be submitted.

Any business information which a submitter desires the Commission to treat as confidential shall be submitted separately and each sheet must be clearly marked at the top "Confidential business data." Confidential submissions must conform with the requirements of section 201.6 of the Commission's Rules of Practice and Procedure (19 CFR 201.6). All written submissions, except for confidential business data, will be available for public inspection.

Hearings.—The Commission has scheduled a hearing in each investigation on the date specified below. A report containing preliminary findings of fact prepared by the Commission's professional staff will be made available to all interested persons prior to the hearing. Any person's prehearing statement must be filed on or before the indicated date. All parties that desire to appear at the hearing and make oral

presentations must file prehearing statements. For further information consult the Commission's Rules of Practice and Procedure, part 207, subpart C (44 F.R. 76457), effective January 1, 1980.

PENDING COUNTERVAILING DUTY INVESTIGATIONS

Invoice No. before Jan. 1, 1980	Invoice No. after Jan. 1, 1980	Product/country	Prehearing report to parties	Deadline for prehearing statements from parties	Hearing date	Hearing location	Contact person
303-TA-11	701-TA-1 (final).	Leather cut or wholly or partly manufactured into forms or shapes suitable for conversion into footwear, provided for in TSUS item 791.27/India.	Jan. 14, 1980.	Jan. 24, 1980.	Feb. 4, 1980.	ITC Bldg., Washington, D.C.	Vera Libeau, 523-0368.
303-TA-12	701-TA-2 (final).	Pig iron, provided for in TSUS item 606.13/Brazil.	Jan. 16, 1980.	Jan. 30, 1980.	Feb. 6, 1980.	do	Daniel Leahy 523-1369.

By order of the Commission.
Issued: January 14, 1980.

KENNETH R. MASON,
Secretary.

Index

U.S. Customs Service

Treasury decisions: T.D. No.

Manmade fiber textile products—Taiwan 80-29

Cotton textile products—Pakistan 80-30

Cotton and manmade fiber textile products—Haiti 80-31

Cotton and manmade fiber textile products—Dominican Republic 80-32

Cotton, wool, and manmade fiber textile products—Poland 80-33

Wool textile products—Malaysia 80-34

Court of Customs and Patent Appeals: C.A.D. No.

Zwicker Knitting Mills v. *The United States* 1240

Customs Court

Judgment in appealed case (p. 24):

Appeal 79-1—White wool yarn; yarns of wool, other; yarns of wool, colo ed; TSUS

○

#308-895 Item 950-D T1.11/3:14/7
350
FEB 1 9 1980
contin

Customs Bulletin

*1.30

Regulations, Rulings, Decisions, and Notices concerning Customs and related matters

and Decisions

of the United States Court of Customs and Patent Appeals and the United States Customs Court

9247

Vol. 14 FEBRUARY 13, 1980 No. 7

This issue contains

T.D. 80–35 through 80–55
ERRATUM
General Notice
C.D. 4837
C.R.D. 80–1
Protest Abstract P80/16 and P80/17
International Trade Commission Notice

THE DEPARTMENT OF THE TREASURY

NOTICE

The abstracts, rulings, and notices which are issued weekly by the U.S. Customs Service are subject to correction for typographical or other printing errors. Users may notify the U.S. Customs Service, Logistics Management Division, Washington, D.C. 20229, of any such errors in order that corrections may be made before the bound volumes are published.

For sale by the Superintendent of Documents, U.S. Government Printing Office, Washington, D.C. 20402. Price: $1.30 (single copy domestic); $1.65 (single copy foreign). Subscription price: $65.00 a year domestic; $81.25 a year foreign.

U.S. Customs Service

Treasury Decisions

(T.D. 80–35)

Manmade Fiber Textile Products—Restriction on Entry

Restriction on entry of manmade fiber textile products manufactured or produced in Thailand

There is published below a directive of December 10, 1979, received by the Commissioner of Customs from the acting chairman, Committee for the Implementation of Textile Agreements, concerning restriction on entry of manmade fiber textile products in categories 641, 645, and 646 manufactured or produced in Thailand. This directive amends, but does not cancel, that committee's directive of December 27, 1978 (T.D. 79–43).

This directive was published in the Federal Register on December 14, 1979 (44 F.R. 72617), by the committee.

(QUO–2–1)

Dated: January 22, 1980.

WILLIAM D. SLYNE
(For G. Scott Shreve, Acting
Director, Duty Assessment Division).

U.S. DEPARTMENT OF COMMERCE,
THE ASSISTANT SECRETARY FOR INDUSTRY AND TRADE,
Washington, D.C., December 10, 1979.

Committee for the Implementation of Textile Agreements

COMMISSIONER OF CUSTOMS,
Department of the Treasury,
Washington, D.C.

DEAR MR. COMMISSIONER: This directive further amends, but does not cancel, the directive of December 27, 1978, from the chairman,

Committee for the Implementation of Textile Agreements concerning imports into the United States of certain cotton, wool, and manmade fiber textile products, produced or manufactured in Thailand.

Under the terms of the Arrangement Regarding International Trade in Textiles done at Geneva on December 20, 1973, as extended on December 15, 1977; pursuant to the Bilateral Cotton, Wool and Man-Made Fiber Textile Agreement of October 4, 1978, as amended, between the Governments of the United States and Thailand; and in accordance with the provisions of Executive Order 11651 of March 3, 1972, as amended by Executive Order 11951 of January 6, 1977, you are directed to prohibit, effective on December 10, 1979, and for the 12-month period beginning on January 1, 1979, and extending through December 31, 1979, entry into the United States for consumption and withdrawal from warehouse for consumption of manmade fiber textile products in categories 641 and 645/646, produced or manufactured in Thailand, in excess of the following levels of restraint:

Category	*Amended 12-month level of restraint* [1]
641	130,167 dozen
645/646	60,790 dozen

The actions taken with respect to the Government of Thailand and with respect to imports of manmade fiber textile proucts from Thailand have been determined by the Committee for the Implementation of Textile Agreements to involve foreign affairs functions of the United States. Therefore, the directions to the Commissioner of Customs, which are necessary for the implementation of such actions, fall within the foreign affairs exception to the rulemaking provisions of 5 U.S.C. 553. This letter will be published in the Federal Register.

Sincerely,

ARTHUR GAREL,
Acting Chairman, Committee for the Implementation of Textile Agreements.

(T.D. 80–36)

Manmade Fiber Textile Products—Restriction on Entry

Restriction on entry of manmade fiber textile products manufactured or produced in India

There is published below a directive of December 4, 1979, received by the Commissioner of Customs from the acting chairman, Committee

[1] The levels of restraint have not been adjusted to account any imports after Dec. 31, 1978.

for the Implementation of Textile Agreements, concerning restriction on entry of manmade fiber textile products in categories 636 and 666 manufactured or produced in India. This directive amends, but does not cancel, that committee's directive of January 5, 1979 (T.D. 79–82).

This directive was published in the Federal Register on December 7, 1979 (44 F.R. 70515), by the committee.

(QUO–2–1)

Dated: January 22, 1980.

WILLIAM D. SLYNE
(For G. Scott Shreve, Acting
Director, Duty Assessment Division).

U.S. DEPARTMENT OF COMMERCE,
INDUSTRY AND TRADE ADMINISTRATION,
Washington, D.C., December 4, 1979.

Committee for the Implementation of Textile Agreements

COMMISSIONER OF CUSTOMS,
Department of the Treasury,
Washington, D.C.

DEAR MR. COMMISSIONER: This directive further amends, but does not cancel the directive of January 5, 1979, from the chairman of the Committee for the Implementation of Textile Agreements which directed you to prohibit, for the 12-month period beginning on January 1, 1979, and extending through December 31, 1979, entry into the United States for consumption and withdrawal from warehouse for consumption of certain cotton, wool, and manmade fiber textile products, produced or manufactured in India.

Under the terms of the Arrangement Regarding International Trade in Textiles, done at Geneva on December 20, 1973, as extended on December 15, 1977; pursuant to the Bilateral Cotton, Wool and Man-Made Fiber Textile Agreement of December 30, 1977, as amended, between the Governments of the United States and India; and in accordance with the provisions of Executive Order 11651 of March 3, 1972, as amended by Executive Order 11951 of January 6, 1977, you are directed, effective on December 7, 1979, to amend the level of restraint previously established for manmade fiber textile products in category 666, produced or manufactured in India to 512,821 pounds.[1]

---

[1] These levels of restraint have not been adjusted to reflect any imports after Dec. 31, 1978. Imports during the January-September period of 1979 amounted to 9,619 dozen in category 636.

Pursuant to the foregoing authorities, you are further directed to prohibit, effective on December 7, 1979, and for the 12-month period beginning on January 1, 1979, and extending through December 31, 1979, entry for consumption or withdrawal from warehouse for consumption of manmade fiber textile products in category 636 in excess of 24,283 dozen.[1]

Textile products in category 636 which have been exported to the United States prior to January 1, 1979, shall not be subject to this directive.

Textile products in category 636 which have been released from the custody of the U.S. Customs Service under the provisions of 19 U.S.C. 1448(b) or 1484(a)(1)(A) prior to the effective date of his directive shall not be denied entry under this directive.

The actions taken with respect to the Government of India and with respect to imports of manmade textile products from India have been determined by the Committee for the Implementation of Textile Agreements to involve foreign affairs functions of the United States. Therefore, the directions to the Commissioner of Customs, which are necessary for the implementation of such actions, fall within the foreign affairs exception to the rulemaking provisions of 5 U.S.C. 553. This letter will be published in the Federal Register.

Sincerely,

PAUL T. O'DAY,
Acting Chairman, Committee for the Implementation of Textile Agreements.

(T.D. 80-37)

Cotton Textile Products—Restriction on Entry

Restriction on entry of cotton textile products manufactured or produced in Taiwan

There is published below a directive of December 5, 1979, received by the Commissioner of Customs from the acting chairman, Committee for the Implementation of Textile Agreements, concerning restriction on entry of cotton textile products in various categories manufactured or produced in Taiwan. This directive amends, but does not cancel, that committee's directive of December 22, 1978 (T.D. 79-48).

[1] These levels of restraint have not been adjusted to reflect any imports after Dec. 31, 1978. Imports during the January-September period of 1979 amounted to 9,619 dozen in category 636.

This directive was published in the Federal Register on December 11, 1979 (44 F.R. 71446), by the committee.

(QUO-2-1)

Dated: January 22, 1980.

WILLIAM D. SLYNE
(For G. Scott Shreve, Acting
Director, Duty Assessment Division).

U.S. DEPARTMENT OF COMMERCE,
THE ASSISTANT SECRETARY FOR INDUSTRY AND TRADE
Washington, D.C., December 5, 1979.

Committee for the Implementation of Textile Agreements

COMMISSIONER OF CUSTOMS,
Department of the Treasury,
Washington, D.C.

DEAR MR. COMMISSIONER: On December 22, 1978, the chairman, Committee for the Implementation of Textile Agreements, directed you to prohibit entry for consumption, or withdrawal from warehouse for consumption, of cotton, wool, and manmade fiber textile products in certain specific categories, produced or manufactured in Taiwan and exported to the United States during the agreement year which began on January 1, 1979, in excess of designated levels of restraint. The chairman further advised you that the levels of restraint are subject to adjustment.[1]

Under the terms of the Arrangement Regarding International Trade in Textiles done in Geneva on December 20, 1973, as extended on December 15, 1977; pursuant to the Bilateral Cotton, Wool and Man-Made Textile Agreement of June 8, 1978, as amended, concerning cotton, wool, and manmade fiber textile products exported from Taiwan; and in accordance with the provisions of Executive Order 11651 of March 3, 1972, as amended by Executive Order 11951 of January 6, 1977, you are directed to amend, effective on December 6, 1979, the levels of restraint established in the directive of December 22, 1978, for categories 333/334/335, 338/339, 340, and 347/348 to the following levels:

---

[1] The term "adjustment" refers to those provisions of the Bilateral Cotton, Wool and Man-Made Fiber Textile Agreement of June 8, 1978, as amended, concerning cotton, wool, and manmade fiber textile products from Taiwan which provide, in part, that: (1) Within the aggregate and group limits, specific ceilings may be exceeded by designated percentages; (2) these same levels may be increased for carryforward; and (3) administrative arrangements or adjustments may be made to resolve minor problems arising in the implementation of the agreement.

Category	*Amended 12-month levels of restraint*[2]
333/334/335	101,564 dozen of which not more than 53,191 dozen shall be in category 333/334 and not more than 63,608 dozen shall be in category 335
338/339	478,901 dozen
340	637,609 dozen
347/348	840,320 dozen of which not more than 412,709 dozen shall be in category 347 and not more than 637,691 dozen shall be in category 348

The actions taken with respect to Taiwan, and with respect to imports of cotton textile products from Taiwan have been determined by the Committee for the Implementation of Textile Agreements to involve foreign affairs functions of the United States. Therefore, the directions to the Commissioner of Customs, being necessary to the implementation of such actions, fall within the foreign affairs exception to the rulemaking provisions of 5 U.S.C. 553. This letter will be published in the Federal Register.

Sincerely,

PAUL T. O'DAY,
Acting Chairman, Committee for the Implementation of Textile Agreements.

(T.D. 80-38)

Cotton, Wool, and Manmade Fiber Textile Products—Imported for Personal Use

Excluding from quota and visa requirements, cotton, wool, and manmade fiber textile products imported for noncommercial, personal use of the importer

There is published below a directive of November 21, 1979, received by the Commissioner of Customs from the acting chairman, Committee for the Implementation of Textile Agreements, concerning shipments of textile products imported for the noncommercial, personal use of the importer. This directive cancels and supersedes that committee's directives of November 30, 1972, and July 10, 1978 (T.D. 73-6 and 78-349, respectively).

---

[2] The levels of restraint have not been adjusted to reflect any imports after Dec. 31, 1978.

This directive was published in the Federal Register on November 27, 1979 (44 F.R. 67701), by the committee.

(QUO-2-1)

Dated: January 22, 1980.

WILLIAM D. SLYNE
(For G. Scott Shreve, Acting
Director, Duty Assessment Division).

U.S. DEPARTMENT OF COMMERCE,
INDUSTRY AND TRADE ADMINISTRATION,
Washington, D.C., November 21, 1979.

Committee for the Implementation of Textile Agreements

COMMISSIONER OF CUSTOMS,
Department of the Treasury,
Washington, D.C.

DEAR MR. COMMISSIONER: This directive cancels and supersedes the directives issued to you on November 30, 1972, and July 10, 1978, by the chairman, Committee for the Implementation of Textile Agreements concerning the exclusion from coverage of any directives establishing quantitative limitations on cotton, wool, and/or manmade fiber textiles and textile products, of shipments, valued at $250 or less, which are imported for the noncommercial, personal use of the individual importing the merchandise.

Pursuant to section 204 of the Agricultural Act of 1956, as amended (7 U.S.C. 1854), and in accordance with the procedures of Executive Order 11651 of March 3, 1972, as amended by Executive Order 11951 of January 6, 1977, you are directed, effective on November 27, 1979, and until further notice, to exclude from the coverage of any directives now, or hereafter put into effect, of cotton, wool, and manmade fiber textiles and textile products satisfying the following requirements:

> Cotton textiles and cotton textile products in categories 300–369, wool textile products in categories 400–469, manmade fiber textile products in categories 600–669 and any additional cotton, wool, and manmade fiber textile categories hereafter incorporated into the textile category system, entered into the United States for consumption or withdrawn from warehouse for consumption, which are imported for the noncommercial, personal use of the individual importing the merchandise, regardless of value. The exception is Hong Kong in which case only those shipments "accompanying a traveler for personal use" and those which are entered as "exempt from duty as bonafide gifts" have been excluded from agreement coverage.

A detailed description of the textile categories in terms of TSUSA

308-893 O - 80 - 2

numbers was published in the Federal Register on January 4, 1978 (43 F.R. 884), as amended on January 25, 1978 (43 F.R. 3421), March 3, 1978 (43 F.R. 8828), June 22, 1978 (43 F.R. 26773), September 5, 1978 (43 F.R. 39408), January 2, 1979 (44 F.R. 94), March 22, 1979 (44 F.R. 17545), and April 12, 1979 (44 F.R. 21843).

In carrying out the above directions, entry into the United States for consumption shall be construed to include entry for consumption into the Commonwealth of Puerto Rico.

The actions taken with respect to the administration of controls on imports of cotton textiles and cotton textile products, wool textile products, and manmade fiber textile products, produced or manufactured abroad, have been determined by the Committee for the Implementation of Textile Agreements to involve foreign affairs functions of the United States. Therefore, the directions to the Commissioner of Customs, which are necessary for the implementation of such actions, fall within the foreign affairs exception to the rulemaking provisions of 5 U.S.C. 553. This letter will be published in the Federal Register.

Sincerely,

PAUL T. O'DAY,
Acting Chairman, Committee for the Implementation of Textile Agreements.

(T.D. 80-39)

Cotton, Wool, and Manmade Fiber Textile Products—Restriction on Entry

Restriction on entry of cotton, wool, and manmade fiber textile products manufactured or produced in Macau

There is published below a directive of December 19, 1979, received by the Commissioner of Customs from the acting chairman, Committee for the Implementation of Textile Agreements, concerning restriction on entry of cotton, wool, and manmade fiber textile products in various categories manufactured or produced in Macau.

This directive was published in the Federal Register on December 26, 1979 (44 F.R. 76384), by the committee.

(QUO-2-1)

Dated: January 22, 1980.

WILLIAM D. SLYNE
(For G. Scott Shreve, Acting
Director, Duty Assessment Division).

U.S. DEPARTMENT OF COMMERCE,
INDUSTRY AND TRADE ADMINISTRATION,
Washington, D.C., December 19, 1979.

Committee for the Implementation of Textile Agreements

COMMISSIONER OF CUSTOMS,
Department of the Treasury,
Washington, D.C.

DEAR MR. COMMISSIONER: On December 27, 1978, the chairman, Committee for the Implementation of Textile Agreements, directed you to prohibit entry during the 12-month period beginning on January 1, 1979, and extending through December 31, 1979, of cotton, wool, and manmade fiber textile products, produced or manufactured in Macau, in excess of designated levels of restraint. The chairman further advised you that the levels of restraint are subject to adjustment.[1]

Under the terms of the Arrangement Regarding International Trade in Textiles done at Geneva on December 20, 1973, as extended on December 15, 1977; pursuant to the Bilateral Cotton, Wool and Man-Made Fiber Textile Agreement of March 3, 1975, as amended, between the Governments of the United States and Portugal; and in accordance with the provisions of Executive Order 11651 of March 3, 1972, as amended by Executive Order 11951 of January 6, 1977, you are directed to prohibit, effective on December 26, 1979, and for the 12-month period beginning on January 1, 1979, and extending through December 31, 1979, entry into the United States for consumption and withdrawal from warehouse for consumption of cotton and manmade fiber products in categories 333/334/335, 338, 340, 347/348, 445/446, and 633/634/635, produced or manufactured in Macau, in excess of the following amounts:

Category	*Adjusted 12-month level of restraint*[2]
333/334/335	90,000 dozen
338	110,530 dozen
340	101,958 dozen
347/348	261,943 dozen
445/446	74,639 dozen
633/634/635	184,753 dozen

[1] The term "adjustment" refers to those provisions of the Bilateral Cotton, Wool and Man-Made Fiber Textile Agreement of March 3, 1975, as amended, between the Governments of the United States and Portugal which provide, in part, that: (1) Within the aggregate and group limits, specific levels of restraint may be exceeded by designated percentages; (2) these levels may also be increased for carryover and carryforward up to 11 percent of the applicable category limits; and (3) administrative arrangements or adjustments may be made to resolve minor problems arising in the implementation of the agreement.

[2] The levels of restraint have not been adjusted to reflect any imports after Dec. 31, 1978.

The actions taken with respect to the Government of Portugal and with respect to imports of cotton and manmade fiber textile products from Macau have been determined by the Committee for the Implementation of Textile Agreements to involve foreign affairs functions of the United States. Therefore, the directions to the Commissioner of Customs, which are necessary for the implementation of such actions, fall within the foreign affairs exception to the rulemaking provisions of 5 U.S.C. 553. This letter will be published in the Federal Register.

Sincerely,

PAUL T. O'DAY,
Acting Chairman, Committee for the Implementation of Textile Agreements.

(T.D. 80-40)

Cotton, Wool, and Manmade Fiber Textile Products—Restriction on Entry

Restriction on entry of cotton, wool, and manmade fiber textile products manufactured or produced in Korea

There is published below a directive of December 4, 1979, received by the Commissioner of Customs from the acting chairman, Committee for the Implementation of Textile Agreements, concerning export visa and exempt certification requirements for the entry of cotton, wool, and manmade fiber textile products manufactured or produced in Korea. This directive further amends, but does not cancel, that committee's directive of May 19, 1972 (T.D. 72-339).

This directive was published in the Federal Register on December 7, 1979 (44 F.R. 70516), by the committee.

(QC0-2-1)

Dated: January 22, 1980.

WILLIAM D. SLYNE
(For G. Scott Shreve, Acting Director, Duty Assessment Division)

U.S. DEPARTMENT OF COMMERCE,
THE ASSISTANT SECRETARY FOR INDUSTRY AND TRADE
Washington, D.C., December 4, 1979.

Committee for the Implementation of Textile Agreements

COMMISSIONER OF CUSTOMS,
Department of the Treasury,
Washington, D.C.

DEAR MR. COMMISSIONER: This letter further amends, but does

not cancel, the directive of May 19, 1972, for the chairman, Committee for the Implementation of Textile Agreements, that directed you to prohibit, effective 30 days after publication of notice in the Federal Register, entry into the United States for consumption and withdrawal from the warehouse for consumption of cotton, wool, and manmade fiber textile products, produced or manufactured in the Republic of Korea for which the Republic of Korea had not issued a visa. It also further amends, but does not cancel, the directive of August 22, 1973, which established a mechanism to exempt from the levels of the bilateral agreement between the Governments of the United States and the Republic of Korea, certain textile products which have been certified for exemption by the Government of the Republic of Korea.

Under the terms of the Arrangement Regarding International Trade in Textiles done at Geneva on December 20, 1973, as extended on December 15, 1977; pursuant to the Bilateral Cotton, Wool and Man-Made Fiber Textile Agreement of December 23, 1977, between the Governments of the United States and the Republic of Korea; and in accordance with the provisions of Executive Order 11651 of March 3, 1972, as amended by Executive Order 11961 of January 6, 1977, the directives of May 19, 1972, and August 22, 1973, as previously amended, are hereby further amended to authorize Choe Hong Geon (Choe, H.G.) to issue visas and certifications for exempt cotton, wool, and manmade fiber textile products exported from the Republic of Korea, effective on November 1, 1979, replacing Kim Chul Su. Goods covered by visas and certifications issued by Kim Chul Su before November 1, 1979, shall not be denied entry.

The actions taken with respect to the Government of the Republic of Korea and with respect to imports of cotton, wool, and manmade fiber textile products from the Republic of Korea have been determined by the Committee for the Implementation of Textile Agreements to involve foreign affairs functions of the United States. Therefore, directions to the Commissioner of Customs, being necessary to the implementation of such actions, fall within the foreign affairs exception to the rulemaking provisions of 5 U.S.C. 553. This letter will be published in the Federal Register.

Sincerely,

PAUL T. O'DAY,
Acting Chairman, Committee for the Implementation of Textile Agreements.

(T.D. 80-41)

Wool Textile Products—Restriction on Entry

Restriction on entry of wool textile products manufactured or produced in Malaysia

There is published below a directive of November 19, 1979, received by the Commissioner of Customs from the acting chairman, Committee for the Implementation of Textile Agreements, concerning restriction on entry of wool textile products in categories 445 and 446 manufactured or produced in Malaysia. This directive amends, but does not cancel, that committee's directive of December 27, 1978 (T.D. 79-49).

This directive was published in the Federal Register on November 23, 1979 (44 F.R. 67204), by the committee.

(QUO-2-1)

Dated: January 22, 1980.

WILLIAM D. SLYNE
(For G. Scott Shreve, Acting
Director, Duty Assessment Division).

U.S. DEPARTMENT OF COMMERCE,
INDUSTRY AND TRADE ADMINISTRATION,
Washington, D.C. November 19, 1979.

Committee for the Implementation of Textile Agreements

COMMISSIONER OF CUSTOMS,
Department of the Treasury,
Washington, D.C.

DEAR MR. COMMISSIONER: This directive further amends, but does not cancel, the directive issued to you on December 27, 1978, by the chairman, Committee for the Implementation of Textile Agreements, concerning imports into the United States of certain cotton, wool, and manmade fiber textile products, produced or manufactured in Malaysia.

Under the terms of the Arrangement Regarding International Trade in Textiles done at Geneva on December 20, 1973, as extended on December 15, 1977; pursuant to the Bilateral Cotton, Wool and Man-Made Fiber Textile Agreement of May 17 and June 8, 1978; and in accordance with the provisions of Executive Order 11651 of March 3, 1972, as amended by Executive Order 11951 of January 6, 1977, you are directed to prohibit, effective on November 25, 1979, and for the 12-month period beginining on January 1, 1979, and extending through

December 31, 1979, entry into the United States for consumption and withdrawal from warehouse for consumption of wool textile products in categories 445 and 446, produced or manufactured in Malaysia, in excess of the following levels of restraint:

Category	*Amended 12-month level of restraint* [1]
445	10,080 dozen
446	14,113 dozen

The actions taken with respect to the Government of Malaysia and with respect to imports of wool textile products from Malaysia have been determined by the Committee for the Implementation of Textile Agreements to involve foreign affairs functions of the United States. Therefore, the directions to the Commissioner of Customs, which are necessary for the implementation of such actions, fall within the foreign affairs exception to the rulemaking provisions of 5 U.S.C. 553. This letter will be published in the Federal Register.

Sincerely,

PAUL T. O'DAY,
Acting Chairman, Committee for the Implementation of Textile Agreements.

(T.D. 80-42)

Cotton Textile Products—Restriction on Entry

Restriction on entry of cotton textile products manufactured or produced in Pakistan

There is published below a directive of November 28, 1979, received by the Commissioner of Customs from the acting chairman, Committee for the Implementation of Textile Agreements, concerning restriction on entry of cotton textile products in categories 351 and 369 manufactured or produced in Pakistan. This directive amends, but does not cancel, that committee's directive of December 27, 1978 (T.D. 79-45).

This directive was published in the Federal Register on December 4, 1979 (44 F.R. 69706), by the committee.

(QUO-2-1)

Dated: January 22, 1980.

WILLIAM D. SLYNE
(For G. Scott Shreve, Acting
Director, Duty Assessment Division).

---

[1] The levels of restraint have not been adjusted to reflect any imports after Dec. 31, 1978.

U.S. DEPARTMENT OF COMMERCE,
INDUSTRY AND TRADE ADMINISTRATION,
Washington, D.C., November 28, 1979.

Committee for the Implementation of Textile Agreements

COMMISSIONER OF CUSTOMS,
Department of the Treasury,
Washington, D.C.

DEAR MR. COMMISSIONER: This directive further amends, but does not cancel, the directive issued to you on December 27, 1978, by the chairman, Committee for the Implementation of Textile Agreements, concerning imports into the United States of certain cotton textile products, produced or manufactured in Pakistan.

Under the terms of the Arrangement Regarding International Trade in Textiles done at Geneva on December 20, 1973, as extended on December 15, 1977; pursuant to the Bilateral Cotton Textile Agreement of January 4 and 9, 1978, as amended, between the Governments of the United States and Pakistan; and in accordance with the provisions of Executive Order 11651 of March 3, 1972, as amended by Executive Order 11951 of January 6, 1977, you are directed, effective on December 4, 1979, to increase the 12-month level of restraint established for cotton textile products in category 369 (except TSUSA 336.1855) to 5,217,391 pounds.[1]

Pursuant to the foregoing authorities, you are further directed to prohibit, effective on December 4, 1979, and for the 12-month period beginning on January 1, 1979, and extending through December 31, 1979, entry for consumption or withdrawal from warehouse for consumption of cotton textile products in category 351 in excess of 6,647 dozen.[2]

Textile products in category 351 which have been exported to the United States prior to January 1, 1979, shall not be subject to this directive.

Textile products in category 351 which have been released from the custody of the U S. Customs Service under the provisions of 19 U.S.C. 1448(b) or 1484(a)(1)(A) prior to the effective date of this directive shall not be denied entry under this directive.

A detailed description of the textile categories in terms of TSUSA numbers was published in the Federal Register on January 4, 1978 (43 F.R. 884), as amended on January 25, 1978 (43 F.R. 3421), March 3, 1978 (43 F.R. 8828), June 22, 1978 (43 F.R. 26773), Sep-

---

[1] The level of restraint has not been adjusted to reflect any imports after Dec. 31, 1978.
[2] Imports during the January–September period of 1979 have amounted to 5,368 dozen.

tember 5, 1978 (43 F.R. 39408), January 2, 1979 (44 F.R. 94), March 22, 1979 (44 F.R. 17545), and April 21, 1979 (44 F.R. 21843).

In carrying out the above directions, entry into the United States for consumption shall be construed to include entry for consumption into the Commonwealth of Puerto Rico.

The action taken with respect to the Government of Pakistan and with respect to imports of cotton textile products from Pakistan has been determined by the Committee for the Implementation of Textile Agreements to involve foreign affairs functions of the United States. Therefore, the directions to the Commissioner of Customs, being necessary to the implementation of such actions fall within the foreign affairs exception to the rulemaking provisions of 5 U.S.C. 553. This letter will be published in the Federal Register.

Sincerely,

PAUL T. O'DAY,
Acting Chairman, Committee for the Implementation of Textile Agreements.

(T.D. 80-43)

Foreign Currencies—Daily Rates for Countries Not on Quarterly List

Rates of exchange based on rates certified to the Secretary of the Treasury by the Federal Reserve Bank of New York for the Brazil cruziero, Peoples Republic of China yuan, Hong Kong dollar, Iran rial, Philippines peso, Singapore dollar, Thailand baht (tical) and Venezuela bolivar

The Federal Reserve Bank of New York, pursuant to section 522(c), Tariff Act of 1930, as amended (31 U.S.C. 372(c)), has certified buying rates for the dates and foreign currencies shown below. The rates of exchange, based on these buying rates, are published for the information and use of Customs officers and others concerned pursuant to part 159, subpart C, Customs Regulations (19 CFR 159, subpart C).

Brazil cruziero:	
January 14–18, 1980	$0.0228
Peoples Republic of China yuan:	
January 14–15, 1980	$0.669389
January 16–18, 1980	.666711
Hong Kong dollar:	
January 14, 1980	$0.203749
January 15, 1980	.203832
January 16, 1980	.205339
January 17, 1980	.205634
January 18, 1980	.205761

308-833 O - 80 - 3

Iran rial:	
January 14–18, 1980	Not available
Philippines peso:	
January 14–18, 1980	$0. 1355
Singapore dollar:	
January 14, 1980	$0. 464360
January 15, 1980	. 463392
January 16, 1980	. 464684
January 17, 1980	. 464360
January 18, 1980	. 464684
Thailand baht (tical):	
January 14–17, 1980	$0. 0487
January 18, 1980	. 048875
Venezuela bolivar:	
January 14–18, 1980	$0. 2329

(LIQ-3-TRODE)

Dated: January 23, 1980.

G. SCOTT SHREVE,
Acting Director,
Duty Assessment Division.

(T.D. 80–44)

Reimbursable Services—Excess Cost of Preclearance Operations

Notice is hereby given that pursuant to section 24.18(d), Customs Regulations (19 CFR 24.18(d)), the biweekly reimbursable excess costs for each preclearance installation are determined to be as set forth below and will be effective with pay period beginning February 10, 1980.

Installation:	*Biweekly excess cost*
Montreal, Canada	$14, 559
Toronto, Canada	24, 574
Kindley Field, Bermuda	7, 363
Nassau, Bahama Islands	13, 519
Vancouver, Canada	13, 341
Winnipeg, Canada	1, 982
Freeport, Bahama Islands	11, 394
Calgary, Canada	9, 655
Edmonton, Canada	2, 763

MITCHELL A. LEVINE,
Acting Comptroller.

(T.D. 80–45)

Customs-Approved Public Gauger

Approval of public gauger performing gauging under standards and procedures required by Customs

Notice is hereby given pursuant to the provisions of section 151.43(b) of the Customs Regulations (19 CFR 151.43(b)) that the application of Laboratory Service, Inc., Lafayette Street, Carteret, N.J. 07008, to gauge imported petroleum and petroleum products in the Newark area, New York Customs region in accordance with the provisions of section 151.43(b) of the Customs Regulations is approved.

Dated: January 25, 1980.

SALVATORE E. CARAMAGNO,
Acting Director, Office of Regulations and Rulings.

Customs-Approved Public Gauger

(T.D. 80–46)

Approval of public gauger performing gauging under standards and procedures required by Customs

Notice is hereby given pursuant to the provisions of section 151.43(b) of the Customs Regulations (19 CFR 151.43(b)) that the application of Capt. W. A. Walls, Inc., Mesquite Street, Corpus Christi, Tex., to gauge imported petroleum and petroleum products in the Customs districts of Brownsville-Cameron County, Tex., Corpus Christi, Tex., and Port Lavaca-Point Comfort, Tex., is approved.

Dated: January 25, 1980.

SALVATORE E. CARAMAGNO,
Acting Director, Office of Regulations and Rulings.

(T.D. 80–47)

Revocation of Approval To Act as a Public Gauger for Customs Purposes

Notice is hereby given pursuant to the provision of section 151.43(d) of the Customs Regulations (19 CFR 151.43(d)) that the approval of International Cargo Surveyors, Inc., d.b.a. Chromaspec Labs, 716 D Montana Street, P.O. Box 71, South Houston, Tex. 77587, to

gauge imported petroleum and petroleum products in all Customs districts in accordance with the provisions of section 151, subpart C, of the Customs Regulations is hereby revoked.

Dated:———

SALVATORE E. CARAMAGNO,
Acting Director, Office of Regulations and Rulings.

(T.D. 80-48)

Wool and Manmade Fiber Textile Products—Restriction on Entry

Restriction on entry of wool and manmade fiber textile products manufactured or produced in Yugoslavia

There is published below a directive of December 19, 1979, received by the Commissioner of Customs from the acting chairman, Committee for the Implementation of Textile Agreements, concerning restriction on entry of wool and manmade fiber textile products in categories 443 and 643 manufactured or produced in Yugoslavia.

This directive was published in the Federal Register on December 26, 1979 (44 F.R. 76385), by the committee.

(QUO-2-1)

Dated: January 28, 1980.

WILLIAM D. SLYNE
(For G. Scott Shreve, Acting
Director, Duty Assessment Division.

U.S. DEPARTMENT OF COMMERCE,
INDUSTRY AND TRADE ADMINISTRATION,
Washington, D.C., December 19, 1979.

Committee for the Implementation of Textile Agreements

COMMISSIONER OF CUSTOMS,
Department of the Treasury, Washington, D.C.

DEAR MR. COMMISSIONER: Under the terms of the Arrangement Regarding International Trade in Textiles done at Geneva on December 20, 1973, as extended on December 15, 1977; pursuant to the Bilateral Textile Agreement of October 26 and 27, 1978, as amended, between the Governments of the United States and the Socialist Republic of Yugoslavia; and in accordance with the provisions of Executive Order 11651 of March 3, 1972, as amended by Executive

Order 11951 of January 6, 1977, you are directed to prohibit, effective on January 1, 1980, and for the 12-month period extending through December 31, 1980, entry into the United States for consumption, and withdrawal from warehouse for consumption of wool and manmade fiber textile products, in category 443/643, in excess of the following level of restraint:

Category	*12-month level of restraint*
443/643	14,270 dozen of which not more than 7,855 dozen shall be in category 443

In carrying out this directive, entries of wool and manmade fiber textile products in category 443/643, produced or manufactured in Yugoslavia, which have been exported prior to Janaury 1, 1980, shall, to the extent of any unfilled balances, be charged against the levels of restraint established for such goods during the 12-month period beginning on January 1, 1979, and extending through December 31, 1979. In the event the levels of restraint established for that period have been exhausted by previous entries, such goods shall be subject to the levels set forth in this letter.

The levels of restraint set forth above are subject to adjustment in the future according to the provisions of the bilateral agreement of October 26 and 27, 1978, between the Governments of the United States and the Socialist Federal Republic of Yugoslavia, which provide, in part, that: (1) Within the group limit the specific limit may be exceeded by no more than 5 percent in any agreement period; and (2) the group limit may be exceeded for carryover and carryforward not to exceed 11 percent of the applicable limit.

A detailed description of the textile categories in terms of TSUSA numbers was published in the Federal Register on January 4, 1978 (43 F.R. 884), as amended on January 25, 1978 (43 F.R. 3421), March 3, 1978 (43 F.R. 8828), June 22, 1978 (43 F.R. 26773), September 5, 1978 (43 F.R. 39408), January 2, 1979 (44 F.R. 94), March 22, 1979 (44 F.R. 17545), and April 12, 1979 (44 F.R. 21843).

In carrying out the above directions, entry into the United States for consumption shall be construed to include entry for consumption into the Commonwealth of Puerto Rico.

The actions taken with respect to the Government of the Socialist Federal Republic of Yugoslavia and with respect to imports of wool and manmade fiber textile products from Yugoslavia have been determined by the Committee for the Implementation of Textile Agreements to involve foreign affairs functions of the United States. Therefore, the directions to the Commissioner of Customs, which are necessary for the implementation of such actions, fall within the foreign

affairs exception to the rulemaking provisions of 5 U.S.C. 553. This letter will be published in the Federal Register.

Sincerely,

PAUL T. O'DAY,
Acting Chairman, Committee for the Implementation of Textile Agreements.

(T.D. 80-49)

Cotton, Wool and Manmade Fiber Textile Products—Restriction on Entry

Restriction on entry of cotton, wool, and manmade fiber textile products manufactured or produced in Romania

There is published below a directive of December 12, 1979, received by the Commissioner of Customs from the acting chairman, Committee for the Implementation of Textile Agreements, concerning restriction on entry of cotton, wool, and manmade fiber textile products in various categories manufactured or produced in Romania.

This directive was published in the Federal Register on December 17, 1979 (44 F.R. 73137), by the committee.

(QUO-2-1)

Dated: January 28, 1980.

WILLIAM D. SLYNE
(For G. Scott Shreve, Acting Director, Duty Assessment Division).

U.S. DEPARTMENT OF COMMERCE,
INDUSTRY AND TRADE ADMINISTRATION,
Washington, D.C., December 12, 1979.

Committee for the Implementation of Textile Agreements

COMMISSIONER OF CUSTOMS,
Department of the Treasury,
Washington, D.C.

DEAR MR. COMMISSIONER: Under the terms of the Arrangement Regarding International Trade in Textiles done at Geneva on December 20, 1973, as extended on December 15, 1977; pursuant to the Bilateral Cotton Textile Agreement of January 6 and 25, 1978, as amended, and the Bilateral Wool and Man-Made Fiber Textile Agreement of June 17, 1977, as amended, between the Governments of the United

States and the Socialist Republic of Romania; and in accordance with the provisions of Executive Order 11651 of March 3, 1972, as amended by Executive Order 11951 of January 6, 1977, you are directed to prohibit, effective on January 1, 1980, and for the 12-month period extending through December 31, 1980, entry into the United States for consumption and withdrawal from warehouse for consumption of cotton, wool, and manmade fiber textile products in categories 335, 338, 435/444, 443, 634, 643/644, 645/646, and 647, produced or manufactured in Romania, in excess of the following level of restraint:

Category	*12-month level of restraint*	
335	36, 320	dozen
338	256, 000	dozen of which not more than 97,222 dozen shall be in TSUSA Nos. 380.0028, 380.0029, 380.0651 and 380.0652
435/444	6, 944	dozen
443	7, 483	dozen
634	53, 269	dozen of which not more than 16,949 dozen shall be in TSUSA Nos. 376.5609, 380.0445, 380.5168, 380.-8410, 380.8416, 380.8417, and 791.7471; and not more than 36,320 dozen shall be in TSUSA Nos. 380.0405, 380.8101, 380.-8109, 380.8111, and 791.-7460.
643/644 pt.[1]	22, 611	dozen
643/644 pt.[2]	2, 083	dozen
645/646	149, 457	dozen
647	39, 326	dozen

In carrying out this directive, entries of cotton, wool, and manmade fiber textile products in the foregoing categories, except categories 335 and 647, produced or manufactured in the Socialist Republic of Romania, which have been exported to the United States prior to January 1, 1980, shall, to the extent of any unfilled balances, be charged against the levels of restraint established for such goods during the 12-month period beginning on January 1, 1979, and extending through December 31, 1979. In the event the levels of restraint estab-

[1] In category 643/644, only TSUSA Nos. 380.0464, 380.5176, 380.8451, 380.8452, 382.0478, 382.4282, and 382.8187

[2] In category 643/644, all TSUSA numbers in the category except those listed in footnote 1.

lished for that period have been exhausted by previous entries such goods shall be subject to the levels set forth in this letter.

Cotton and manmade fiber textile products in categories 335 and 647 which have been exported to the United States prior to January 1, 1980, shall not be subject to this directive.

Cotton and manmade fiber textile products in categories 335 and 647 which have been released from the custody of the U.S. Customs Service under the provisions of 19 U.S.C. 1448(b) or 1484(a)(1)(A) prior to the effective date of this directive shall not be denied entry under this directive.

The levels of restraint set forth above are subject to adjustment according to the provisions of the bilateral agreements, as amended, between the Governments of the United States and the Socialist Republic of Romania, which provide, in part, that: (1) Certain wool and manmade fiber textile products that are subject to specific limits may be exceeded within the applicable group limits by designated percentages to account for flexibility; (2) consultation levels may be increased upon agreement between the two governments; and (3) administrative arrangements or adjustments may be made to resolve minor problems arising in the implementation of the agreements. Any appropriate future adjustments under the foregoing provision of the bilateral agreements will be made to you by letter.

A detailed description of the textile categories in terms of TSUSA numbers was published in the Federal Register on January 4, 1978 (43 F.R. 884), as amended on January 25, 1978 (43 F.R. 3421), March 3, 1978 (43 F.R. 8828), June 22, 1978 (43 F.R. 26773), September 5, 1978 (43 F.R. 39408), January 2, 1979 (44 F.R. 94), March 22, 1979 (44 F.R. 17545), and April 12, 1979 (44 F.R. 21843).

In carrying out the above directions, entry into the United States for consumption shall be construed to include entry for consumption into the Commonwealth of Puerto Rico.

The actions taken with respect to the Government of the Socialist Republic of Romania and with respect to imports of cotton, wool, and manmade fiber textile products from Romania have been determined by the Committee for the Implementation of Textile Agreements to involve foreign affairs functions of the United States. Therefore, the directions to the Commissioner of Customs, which are necessary for the implementation of such actions, fall within the foreign affairs exception to the rulemaking provisions of 5 U.S.C. 553. This letter will be published in the Federal Register.

Sincerely,

ARTHUR GAREL,
Acting Chairman, Committee for the Implementation of Textile Agreements.

(T.D. 80-50)

Cotton, Wool, and Manmade Fiber Textile Products—Restriction on Entry

Restriction on entry of cotton, wool, and manmade fiber textile products manufactured or produced in Singapore

There is published below a directive of December 14, 1979, received by the Commissioner of Customs from the acting chairman, Committee for the Implementation of Textile Agreements, concerning restriction on entry of cotton, wool, and manmade fiber textile products in various categories manufactured or produced in Singapore.

This directive was published in the Federal Register on December 20, 1979 (44 F.R. 75440), by the committee.

(QUO-2-1)

Dated: January 28, 1980.

WILLIAM D. SLYNE
(For G. Scott Shreve, Acting
Director, Duty Assessment Division).

U.S. DEPARTMENT OF COMMERCE,
THE ASSISTANT SECRETARY FOR INDUSTRY AND TRADE,
Washington, D.C., December 14, 1979.

Committee for the Implementation of Textile Agreements

COMMISSIONER OF CUSTOMS,
Department of the Treasury,
Washington, D.C.

DEAR MR. COMMISSIONER: Under the terms of the Arrangement Regarding International Trade in Textiles done at Geneva on December 20, 1973, as extended on December 15, 1977; pursuant to the Bilateral Cotton, Wool and Man-Made Fiber Textile Agreement of September 21 and 22, 1978, as amended, between the Governments of the United States and the Republic of Singapore; and in accordance with the provisions of Executive Order 11651 of March 3, 1972, as amended by Executive Order 11951 of January 6, 1977, you are directed to prohibit, effective on January 1, 1980, and for the 12-month period extending through December 31, 1980, entry into the United States for consumption, and withdrawal from warehouse for consumption

308-893 O - 80 - 4

of cotton, wool, and manmade fiber textile products, exported from Singapore in the following categories on excess of the indicated 12-month levels of restraint:

Category	*12-month level of restraint*	
315	1, 000, 000	square yards
320	6, 000, 000	square yards
331	221, 429	dozen pairs
333/334/335	165, 375	dozen of which not more than 9,509 dozen shall be in category 333; not more than 50,208 dozen shall be in category 334; and not more than 130,464 dozen shall be in category 335
340	385, 875	dozen
341	48, 276	dozen
347/348	490, 088	dozen of which not more than 474,764 dozen shall be in category 347 and not more than 188,-034 dozen shall be in category 348
445/446	20, 000	dozen
602	86, 207	pounds
604	700, 000	pounds
613	1, 000, 000	square yards
638/639	2, 885, 648	dozen of which not more than 360,706 dozen shall be in category 638
641	77, 276	dozen

In carrying out the directive, entries of cotton, wool, and manmade fiber textile products in the foregoing categories, except categories 333/334/335, 340, and 602, produced or manufactured in Singapore, which have been exported to the United States prior to January 1, 1980, shall, to the extent of any unfilled balances, be charged against the levels of restraint established for such goods during the 12-month period beginning on January 1, 1979, and extending through December 31, 1979. In the event the levels of restraint established for that period have been exhausted by previous entries, such goods shall be subject to the levels set forth in this letter.

Cotton and manmade fiber textile products in categories 333/334/335, 340, and 602 which have been exported to the United States prior to January 1, 1980, shall not be subject to this directive.

Textile products in categories 333/334/335, 340, 602 which have been released from the custody of the U.S. Customs Service under the provisions of 19 U.S.C. 1448(b) or 1484(a)(1)(A) prior to the effective date of this directive shall not be denied entry under this directive.

The levels set forth above are subject to adjustment in the future according to the provisions of the bilateral agreement of September 21 and 22, 1978, as amended, between the Governments of the United States and the Republic of Singapore which provide, in part, that: (1) Within the aggregate and applicable group limits, specific limits and sublimits, may be exceeded by designated percentages; (2) specific levels may be increased for carryover and carryforward up to 11 percent of the applicable category limit; and (3) administrative arrangements or adjustments may be made to resolve minor problems arising in the implementation of the agreement. Any appropriate adjustments under the provisions of the bilateral agreement, referred to above, will be made to you by letter.

A detailed description of the textile categories in terms of TSUSA numbers was published in the Federal Register on January 4, 1978 (43 F.R. 884), as amended on January 25, 1978 (43 F.R. 3421), March 3, 1978 (43 F.R. 8828), June 22, 1978 (43 F.R. 26773), September 5, 1978 (43 F.R. 39408), January 2, 1979 (44 F.R. 94), March 22, 1979 (44 F.R. 17545), and April 12, 1979 (44 F.R. 21843).

In carrying out the above directions, entry into the United States for consumption shall be construed to include entry for consumption into the Commonwealth of Puerto Rico.

The actions taken with respect to the Government of the Republic of Singapore and with respect to imports of cotton, wool, and manmade fiber textile products from Singapore have been determined by the Committee for the Implementation of Textile Agreements to involve foreign affairs functions of the United States. Therefore, the directions to the Commissioner of Customs, which are necessary for the implementation of such actions, fall within the foreign affairs exception to the rulemaking provisions of 5 U.S.C. 553. This letter will be published in the Federal Register.

Sincerely,

ARTHUR GAREL,
Acting Chairman, Committee for the Implementation of Textile Agreements.

(T.D. 80-51)

Cotton, Wool, and Manmade Fiber Textile Products—Restriction on Entry

Restriction on entry of cotton, wool, and manmade fiber textile products manufactured or produced in the Philippines

There is published below a directive of December 19, 1979, received by the Commissioner of Customs from the acting chairman, Committee for the Implementation of Textile Agreements, concerning restriction on entry of cotton, wool, and manmade fiber textile products in various categories manufactured or produced in the Philippines.

This directive was published in the Federal Register on December 26, 1979 (44 F.R. 76386), by the committee.

(QUO-2-1)

Dated: January 28, 1980.

WILLIAM D. SLYNE
(For G. Scott Shreve, Acting
Director, Duty Assessment Division).

U.S. DEPARTMENT OF COMMERCE,
THE ASSISTANT SECRETARY FOR INDUSTRY AND TRADE,
Washington, D.C., December 19, 1979.

Committee for the Implementation of Textile Agreements

COMMISSIONER OF CUSTOMS,
Department of the Treasury,
Washington, D.C.

DEAR MR. COMMISSIONER: Under the terms of the Arrangement Regarding International Trade in Textiles done at Geneva on December 20, 1973, as extended on December 15, 1977; pursuant to the Bilateral Cotton, Wool and Man-Made Fiber Textile Agreement of August 22 and 24, 1978, as amended, between the Governments of the United States and the Republic of the Philippines; and in accordance with the provisions of Executive Order 11651 of March 3, 1972, as amended by Executive Order 11951 on January 6, 1977, you are directed to prohibit, effective on January 1, 1980, and for the 12-month period extending through December 31, 1980, entry into the United States for consumption and withdrawal from warehouse for consumption of cotton, wool, and manmade fiber textile products in categories 340, 341pt., 442, 445/446, 459, 604, 631, 636pt., 640, 641, 645/646pt.,

and 649, produced or manufactured in the Philippines, in excess of the following level of restraint:

Category	*12-month level of restraint*	
340	220,492	dozen
341pt.[1]	80,689	dozen
442	6,452	dozen
445/446	17,421	dozen
459	116,138	pounds
604	2,033,116	pounds
631	1,511,948	dozen pairs
636pt.[2]	40,249	dozen
640	93,054	dozen
641pt.[3]	62,872	dozen
641pt.[4]	163,344	dozen
645/646pt.[5]	84,264	dozen
649	3,607,489	dozen

In carrying out this directive, entries of textile products in the foregoing categories, except category 442, which have been exported to the United States prior to January 1, 1980, shall, to the extent of any unfilled balances, be charged against the levels of restraint established for such goods during the 12-month period beginning on January 1, 1979, and extending through December 31, 1979. In the event that the levels of restraint established for that period have been exhausted by previous entries, such goods shall be subject to the levels set forth in this letter. Wool textile products in category 442, exported prior to January 1, 1980, shall not be subject to this directive.

Textile products in category 442 which have been released from the custody of the U.S. Customs Service under the provisions of 19 U.S.C. 1448(b) or 1484(a)(1)(A) prior to the effective date of this directive shall not be denied entry under this directive.

The levels of restraint set forth above are subject to adjustment according to the provisions of the bilateral agreement of August 22 and 24, 1978, as amended, between the Governments of the United States and the Republic of the Philippines which provide, in part, that: (1) 3 percent growth shall be applied to certain specified ceilings during the second and each successive agreement year; and (2) administrative arrangements or adjustments may be made to resolve minor problems arising in the implementation of the agreement. Any appro-

---

[1] In category 341, only TSUSA Nos. 382.0039, 382.3302, 382.3305, and 382.3309.

[2] In category 636, only TSUSA Nos. 382.0413, 382.0416, 382.7832, 382.7834, 382.0466, 382.0469, 382.8173, and 382.8174.

[3] In category 641, only TSUSA Nos. 382.0460 and 382.8139.

[4] In category 641, only TSUSA Nos. 382.0459, 382.0461, 382.8133, 382.8137, 382.8143, and 382.8144.

[5] In category 645/646, all TSUSA numbers except 382.0427 and 382.7870.

priate adjustments under the provisions of the bilateral agreement referred to above will be made to you by letter.

A detailed description of the textile categories in terms of TSUSA numbers was published in the Federal Register on January 4, 1978 (43 F.R. 884), as amended on January 25, 1978 (43 F.R. 3421), March 3, 1978 (43 F.R. 8828), June 22, 1978 (43 F.R. 26773), September 5, 1978 (43 F.R. 39408), January 2, 1979 (44 F.R. 94), March 22, 1979 (44 F.R. 17545), and April 12, 1979 (44 F.R. 21843).

In carrying out the above directions, entry into the United States for consumption shall be construed to include entry for consumption into the Commonwealth of Puerto Rico.

The actions taken with respect to the Government of the Republic of the Philippines and with respect to imports of cotton, wool, and manmade fiber textile products from the Philippines have been determined by the Committee for the Implementation of Textile Agreements to involve foreign affairs functions of the United States. Therefore, the directions to the Commissioner of Customs, which are necessary for the implementation of such actions, fall within the foreign-affairs exception to the rulemaking provisions of 5 U.S.C. 553. This letter will be published in the Federal Register.

Sincerely,

PAUL T. O'DAY,
Acting Chairman, Committee for the Implementation of Textile Agreements.

(T.D. 80-52)

Cotton, Wool, and Manmade Fiber Textile Products--Restriction on Entry

Restriction on entry of cotton, wool, and manmade fiber textile products manufactured or produced in Malaysia

There is published below a directive of December 11, 1979, received by the Commissioner of Customs from the acting chairman, Committee for the Implementation of Textile Agreements, concerning restriction on entry of cotton, wool, and manmade fiber textile products in various categories manufactured or produced in Malaysia.

This directive was published in the Federal Register on December 14, 1979 (44 F.R. 72618), by the committee.

(QUO-2-1)

Dated: January 28, 1980.

WILLIAM D. SLYNE
(For G. Scott Shreve, Acting Director, Duty Assessment Division).

U.S. DEPARTMENT OF COMMERCE,
INDUSTRY AND TRADE ADMINISTRATION,
Washington, D.C., December 11, 1979.

Committee for the Implementation of Textile Agreements

COMMISSIONER OF CUSTOMS,
Department of the Treasury,
Washington, D.C.

DEAR MR. COMMISSIONER: Under the terms of the Arrangement Regarding International Trade in Textiles done at Geneva on December 20, 1973, as extended on December 15, 1977; pursuant to the Bilateral Cotton, Wool and Man-Made Fiber Textile Agreement of May 17 and June 8, 1978, as amended, between the Governments of the United States and Malaysia; and in accordance with the provisions of Executive Order 11651 of March 3, 1972, as amended by Executive Order 11951 of January 6, 1977, you are directed to prohibit, effective on January 1, 1980, and for the 12-month period extending through December 31, 1980, entry into the United States for consumption, and withdrawal from warehouse for consumption of cotton, wool, and manmade fiber textile products, exported from Malaysia in the following categories in excess of the indicated 12-month levels of restraint:

Category	*12-month level of restraint*	
317	3,000,000	square yards
320	6,500,000	square yards
331	457,190	dozen pair
339	128,889	dozen
340	243,158	dozen
347	89,209	dozen
348	53,833	dozen
445	10,081	dozen
446	14,113	dozen
604	365,854	lbs.
613	2,000,000	square yards
638/639	141,311	dozen of which not more than 75,884 dozen shall be in category 639

In carrying out this directive, entries of cotton, wool, and manmade fiber textile products in the foregoing categories, produced or manufactured in Malaysia, which have been exported to the United States prior to January 1, 1980, shall, to the extent of any unfilled balances, be charged against the levels of restraint established for such goods during the 12-month period beginning on January 1, 1979, and extend-

ing through December 31, 1979. In the event the levels of restraint established for that period have been exhausted by previous entries, such goods shall be subject to the levels set forth in this letter.

The levels set forth above are subject to adjustment in the future according to the provisions of the bilateral agreement of May 17 and June 8, 1978, as amended, between the Governments of the United States and Malaysia which provide, in part, that: (1) Within the aggregate and group limits, specific levels of restraint, including their sublimits, may be exceeded by designated percentages; (2) specific levels may be increased for carryover and carryforward up to 11 percent of the applicable category limit; and (3) administrative arrangements or adjustments may be made to resolve minor problems arising in the implementation of the agreement. Any appropriate adjustments under the provisions of the bilateral agreement, referred to above, will be made to you by letter.

A detailed description of the textile categories in terms of TSUSA numbers was published in the Federal Register on January 4, 1978 (43 F.R. 884), as amended on January 25, 1978 (43 F.R. 3421), March 3, 1978 (43 F.R. 8828), June 22, 1978 (43 F.R. 26773), September 5, 1978 (43 F.R. 39408), January 2, 1979 (44 F.R. 94), March 22, 1979 (44 F.R. 17545), and April 12, 1979 (44 F.R. 21843).

In carrying out the above directions, entry into the United States for consumption shall be construed to include entry for consumption into the Commonwealth of Puerto Rico.

The actions taken with respect to the Government of Malaysia and with respect to imports of cotton, wool, and manmade fiber textile products from Malaysia have been determined by the Committee for the Implementation of Textile Agreements to involve foreign affairs functions of the United States.

(T.D. 80-53)

Cotton and Manmade Fiber Textile Products—Restriction on Entry

Restriction on entry of cotton and manmade fiber textile products manufactured or produced in Mexico

There is published below a directive of December 18, 1979, received by the Commissioner of Customs from the acting chairman, Committee for the Implementation of Textile Agreements, concerning restriction on entry of cotton and manmade fiber textile products in various categories manufactured or produced in Mexico.

This directive was published in the Federal Register on December 26, 1979 (44 F.R. 76383), by the committee.

(QUO-2-1)

Dated: January 28, 1980.

WILLIAM D. SLYNE
(For G. Scott Shreve, Acting
Director, Duty Assessment Division).

U.S. DEPARTMENT OF COMMERCE,
INDUSTRY AND TRADE ADMINISTRATION,
Washington, D.C., December 18, 1979.

Committee for the Implementation of Textile Agreements

COMMISSIONER OF CUSTOMS,
Department of the Treasury,
Washington, D.C.

DEAR MR. COMMISSIONER: Under the terms of the Arrangement Regarding International Trade in Textiles done at Geneva on December 20, 1973, as extended on December 15, 1977; pursuant to the Bilateral Cotton, Wool and Man-Made Fiber Textile Agreement of February 26, 1979, as amended, between the Governments of the United States and Mexico; and in accordance with the provisions of Executive Order 11651 of March 3, 1972, as amended by Executive Order 11951 of January 6, 1977, you are directed to prohibit, effective on January 1, 1980, and for the 12-month period beginning on January 1, 1979, and extending through December 31, 1979, entry into the United States for consumption and withdrawal from warehouse for consumption of cotton and manmade fiber textile products in the following categories, produced or manufactured in Mexico, in excess of the indicated 12-month levels of restraint:

Category	*12-month level of restraint*	
338/339	393, 820	dozen
347/348	563, 490	dozen of which not more than 338,094 dozen shall be in category 347 and not more than 338,094 dozen shall be in category 348
359	152, 174	pounds
604 (only TSUSA No. 310.5049)	853, 659	pounds
633	50, 248	dozen
634/635	286, 450	dozen of which not more

308-893 O - 80 - 5

		than 171,870 dozen shall be in category 634 and not more than 171,870 dozen shall be in category 635
638/639	13, 774, 573	square yards equivalent of which not more than 459,152 dozen shall be in category 638 and not more than 550,983 dozen shall be in category 639
641	236, 669	dozen
647/648	1, 400, 828	dozen of which not more than 840,497 dozen shall be in category 647 and not more than 840,497 dozen shall be in category 648
649	2, 437, 500	dozen

In carrying out this directive, entries of cotton and manmade fiber textile products in the foregoing categories, produced or manufactured in Mexico, which have been exported prior to January 1, 1980, shall, to the extent of any unfilled balances, be charged against the levels of restraint established for such goods during the 12-month period beginning on January 1, 1979, and extending through December 31, 1979. In the event the levels of restraint established for that period have been exhausted by previous entries, such goods shall be subject to the levels set forth in this letter.

The levels set forth above are subject to adjustment in the future according to the provisions of the bilateral agreement of February 26, 1979, between the Governments of the United States and Mexico, provide, in part, that: (1) Specific limits or specific sublimits may be exceeded by not more than 7 percent in any agreement period; (2) these same limits may be increased for carryover and carryforward up to 11 percent of the applicable category limit or sublimit; and (3) administrative arrangements or adjustments may be made to resolve minor problems arising in the implementation of the agreement. Any appropriate adjustments under the provisions of the bilateral agreement, referred to above, will be made to you by letter.

A detailed description of the textile categories in terms of TSUSA numbers was published in the Federal Register on January 4, 1978 (43 F.R. 884), as amended on January 25, 1978 (43 F.R. 3421), March 3, 1978 (43 F.R. 8828), June 22, 1978 (43 F.R. 26773), Septem-

ber 5, 1978 (43 F.R. 39408), January 2, 1979 (44 F.R. 94), March 22, 1979 (44 F.R. 17545), and April 12, 1979 (44 F.R. 21843).

In carrying out the above directions, entry into the United States for consumption shall be construed to include entry for consumption into the Commonwealth of Puerto Rico.

The actions taken with respect to the Government of Mexico and with respect to imports of cotton and manmade fiber textile products from Mexico have been determined by the Committee for the Implementation of Textile Agreements to involve foreign affairs functions of the United States. Therefore, the directions to the Commissioner of Customs, which are necessary for the implementation of such actions, fall within the foreign affairs exception to the rulemaking provisions of 5 U.S.C. 553. This letter will be published in the Federal Register.

Sincerely,

PAUL T. O'DAY,
Acting Chairman, Committee for the Implementation of Textile Agreements.

(T.D. 80-54)

Cotton, Wool, and Manmade Fiber Textile Products—Restriction on Entry

Restriction on entry of cotton, wool, and manmade fiber textile products manufactured or produced in India

There are published below directives of November 26 and December 28, 1979, received by the Commissioner of Customs from the acting chairman, Committee for the Implementation of Textile Agreements, concerning visa, elephant and exempt certification requirements for entry of cotton, wool, and manmade fiber textile products manufactured or produced in India. The December 28 directive amends the November 28, 1979, directive which cancels and supersedes that committee's directive of May 13, 1975 (T.D. 75-137).

The directives were published in the Federal Register on November 29, 1979, and January 4, 1980 (44 F.R. 68504 and 45 F.R. 1125), by the committee.

(QUO-2-1)

Dated: January 28, 1980.

WILLIAM D. SLYNE
(For G. Scott Shreve, Acting
Director, Duty Assessment Division).

U.S. DEPARTMENT OF COMMERCE,
INDUSTRY AND TRADE ADMINISTRATION,
Washington, D.C., November 26, 1979.

Committee for the Implementation of Textile Agreements

COMMISSIONER OF CUSTOMS,
Department of the Treasury,
Washington, D.C.

DEAR MR. COMMISSIONER: This directive cancels and supersedes the directive of May 13, 1975, as amended, issued to you by the Chairman of the Committee for the Implementation of Textile Agreements, which directed you to prohibit entry for consumption or withdrawal from warehouse for consumption of certain cotton, wool, and manmade fiber textile products for which the Government of India had not issued an appropriate export visa, elephant-shaped certification, or exempt certification.

Under the terms of the Arrangement Regarding International Trade in Textiles done at Geneva on December 20, 1973, as extended on December 15, 1977; pursuant to the Bilateral Cotton, Wool, and Man-Made Fiber Textile Agreement of December 30, 1977, as amended, between the Governments of the United States and India; and in accordance with the provisions of Executive Order 11651 of March 3, 1972, as amended by Executive Order 11951 of January 6, 1977, you are directed, effective on January 7, 1980, and until further notice, to prohibit entry into the United States for consumption or withdrawal from warehouse for consumption of cotton, wool, and manmade fiber textile and apparel products, in categories 300–369, 400–469, and 600–669, produced or manufactured in India and exported on or after January 7, 1980, which are not visaed or certified in accordance with the procedures outlined below. Merchandise exported before January 7, 1980, which has been visaed or certified in accordance with previously established procedures shall not be denied entry.

Merchandise not covered separately in the following paragraphs shall be visaed. The visa will be an original, circular-stamped marking in blue ink on the front of the invoice (Special Customs Invoice Form 5515, successor document, or commercial invoice when such form is used) and will include its number, the date, signature, and title of the issuing official, and will show the correct categories and quantities in the shipment in the applicable category units.

Apparel products in categories 330–359, 431–459, and 630–659 made from handloomed fabrics of the cottage industry of India, not wholly by hand, shall be certified prior to exportation from India. The

certification will be an original elephant-shaped stamped marking in blue ink on the front of the invoice (Special Customs Invoice Form 5515, successor document, or commercial invoice, when such form is used) and will include its number, the date, signature, and title of the issuing official, and will show the correct categories and quantities in the shipment in the applicable category units, except, if the quantity indicated on the elephant-shaped certification or the visa is more than that of the shipment, entry shall be permitted. Otherwise, the categories and quantities shall be those determined by the U.S. Customs Service or the shipment shall be denied entry.

Handloom fabric, handmade, handloom, madeup articles, India items listed in the enclosure, and commercial shipments valued at $250 or less, shall be certified prior to exportation from India. The certification will be an original, rectangular-shaped, stamped marking in blue ink on the front of the invoice (Special Customs Invoice Form 5515, successor document, or commercial invoice when such form is used) and will state the basis for exemption by use of the description "handloomed fabric," "handmade, handloom, madeup articles," "$250 or less," or the name of the particular India item. The list of India items which may be amended in the future is enclosed.

Facsimiles of the visa and certification stamps are also enclosed.

Merchandise classified in TSUSA Nos. 360.0500, 360.1000, 360.1500, 360.7600, 360.7800, 361.4200, 361.4400, and 361.5420 do not require a visa or certification and shall not be charged to the levels of the bilateral agreement.

All merchandise covered by an invoice which has an exempt certification but includes merchandise other than that defined as subject to the exempt certification will be denied entry. Entry shall also be denied for merchandise covered by an invoice which has an elephant certification but includes merchandise other than that defined as subject to the elephant certification.

You are directed to permit entry into the United States for consumption and withdrawal from warehouse for consumption of designated shipments of textile products, produced or manufactured in India and exported to the United States, notwithstanding the designated shipment or shipments do not fulfill the aforementioned visa and certification requirements, whenever requested to do so in writing by the chairman of the Committee for the Implementation of Textile Agreements.

A detailed description of the textile categories in terms of TSUSA numbers was published in the Federal Register on January 4, 1978 (43 F.R. 884), as amended on January 25, 1978 (43 F.R. 3421), March 3, 1978 (43 F.R. 8828), June 22, 1978 (43 F.R. 26773), Septem-

ber 5, 1978 (43 F.R. 39408), January 2, 1979 (44 F.R. 94), March 22, 1979 (44 F.R. 17545), and April 12, 1979 (44 F.R. 21832).

In carrying out the above directions, entry into the United States for consumption shall be construed to include entry for consumption into the Commonwealth of Puerto Rico.

The actions taken with respect to the Government of India and with respect to imports of textile products from India have been determined by the Committee for the Implementation of Textile Agreements to involve foreign affairs functions of the United States. Therefore, the directions to the Commissioner of Customs, which are necessary for the implementation of such actions, fall within the foreign affairs exception to the rulemaking provisions of 5 U.S.C. 553. This letter will be published in the Federal Register.

Sincerely,

PAUL T. O'DAY,
Acting Chairman, Committee for the Implementation of Textile Agreements.

Enclosure.

GOVERNMENT OF INDIA

TEXTILE VISA

CATEGORY QUANTITY

G R I No.....

SIGNATURE .....

TITLE .....

No.....DATED.....

GOVERNMENT OF INDIA

CERTIFIED PRODUCTS OF HANDLOOM FABRICS

CATEGORY QUANTITY

G. R. I. No.....

SIGNATURE.....

TITLE.....

NO.....DATED.....

GOVERNMENT OF INDIA

EXEMPT CERTIFICATE

DESCRIPTION

G R I No.....

SIGNATURE.....

TITLE.....

No..... DATED.....

INDIA ITEMS

1. Kurtha	A loose-fitting tunic, almost straight, in short, medium and long sizes. Some typical examples of Kurtha are: Kathiawar mirrored Kurtha, wooden-beaded Delhi Kurtha, Delhi embroidered Kurtha, Bandini Kurtha, Lucknow chikan Kurtha, Madras short Kurtha, Sanganer printed Kurtha, Phulkari Kurtha, etc.
2. Churidar Pyjama or Churidar Set.	A pair of trousers, loose at waist, with either drawstring or hooks and tapering to a tight fit at ankle. It is traditionally a Moghul costume worn by Indian women since the 16th century along with a Kurtha and Dupatta (an oblong scarf).
3. Jawahar Jacket	A loose-fitting waist coat, with or without buttons, traditionally worn over Kurthas or Kameez by men and women.
4. Pherron	A full-length dress loose and longer than the Kurtha with long loose sleeves worn originally by Kashmiris. Intricate embroidery depicting floral designs is done around the neck of this costume.
5. Angharkha	A traditional dress of Moghul times, open down the front with decorative string or ribbon used to tie at the sides or center. (This also includes Angharkha or ribbed cotton worn in Rajasthan.)
6. Bagal Bandini	A garment similar to Angharkha, short or long, with a wraparound effect and tied at the sides.
7. Ghagras/Lahngas	Long, wide skirt with drawstrings or hooks. A garment usually reaching to or below ankles.
8. Pavadai	A long, wide shirt similar to Ghagras, often in two-piece ensemble, as an accessory worn with Saree or Dupatta.
9. Choli	A short blouse worn on festive occasions by the tribal people of Kuch and Rajasthan.
10. Lungi or Lungi Set	A long garment worn as a wraparound the lower half of the body, with or without a Kurtha, or a loose-fit blouse or a Choli.
11. Salwar/Gararra	Loose-fit trousers, legs may be straight or baggy at the thighs. This also includes Gararra which is a straight trouser up to the knee, and below the knee shaped like a Ghagra, with frills, etc.
12. Dupatta	A scarf usually about 4 feet long, wrapped by women along with Kurtha and Churidar. This also includes other types of scarves worn in varied sizes, the characteristics being the same as above.
13. Ohdhani	An oblong cloth about 6 to 7 feet long and 3 to 4 feet wide with overall embroidery or a woven jacquard weave with traditional designs like himroo shawl or made up of a fabric decorated with cotton/silk/zari or any other fibre yarn used to cover the body.
14. Chola	An ankle-length, loose-fit, long Kurtha traditionally worn by religious priests.
15. Safa	Headwear made up of printed or embroidered fabrics.

16. Aba	An over garment close fit at the upper part with a Ghagra-type skirt touching the ankles.
17. Burka	Over garment worn by Muslim women which covers the head and extends to the ankles.
18. Jama	A long Kurtha traditionally worn by a special class of people.
19. Patka	A long, traditional stole with Indian designs ornamented with art work of various types.
20. Tamba/Tambi	Loose-fit trousers usually worn in North India.
21. Thailis	Totobags, purses, pouch bags, and similar accessories to traditionally Indian dresses.
22. Toran	A long, embroidered strip of cloth elegantly embroidered with plain or applique work embroidery, used for decorating the entrance doors of Indian residences. This represents a wide variety of fine embroidered pieces connected with folk art, particularly from Kathiawar in Gujarat (west coast of India).
23. Phulkari	Decorative, embroidered, roughspun, cotton fabric with close darning stitch employed with strands of untwisted silk to make the flower-like embroidery.
24. Thombai	Cylindrical hanging with handmade applique work of hand-printed/hand-painted/hand-embroidered fabrics. These are traditionally used in South Indian temples as decorative hangings from ceilings or in doorways for gala affairs.
25. Puri Chatta	Flat, highly decorative umbrella with applique work.
26. Gabba	Embroidered floor covering using waste rags. Usually embroidered or made in applique work on old woolen blanket or jute base with cotton backing peculiar to Kashmir region.
27. Shamiana	Canopy or awning used as ceiling decoration.
28. Kalamkari	Hand painted/printed with wax resist wall pieces depicting mythological characters.
29. Chakla	Wall hangings with folk embroidery, with or without mirror work, framed and unframed. The stitches are interspersed and interplaced.
30. Batik wall pieces	Wall hangings made of cotton fabrics hand painted with batik technique. The designs are usually mythological narrations.

(T.D. 80–55)

Cotton, Wool, and Manmade Fiber Textile Products—Restriction on Entry

Restriction on entry of cotton, wool, and manmade fiber textile products manufactured or produced in the Republic of the Philippines

There are published below directives of November 21, December 20, and December 28, 1979, received by the Commissioner of Customs from the acting chairman, Committee for the Implementation of Tex-

tile Agreements, concerning visa and exempt certification requirements for cotton, wool, and manmade fiber textile products manufactured or produced in the Republic of the Philippines. The December 20 and 28 directives amend the November 21, 1979, directive. The November 21 directive cancels and supersedes that committee's directive of August 31, 1976 (T.D. 76-307).

The directives were published in the Federal Register on November 28, 1979 (44 F.R. 86005), December 27, 1979 (44 F.R. 76574), and January 4, 1980 (45 F.R. 1125), by the committee.

(QUO-2-1)

Dated: January 28, 1980.

WILLIAM D. SLYNE
(For G. Scott Shreve, Acting
Director, Duty Assessment Division).

U.S. DEPARTMENT OF COMMERCE,
INDUSTRY AND TRADE ADMINISTRATION,
Washington, D.C., November 21, 1979.

Committee for the Implementation of Textile Agreements

COMMISSIONER OF CUSTOMS,
Department of the Treasury,
Washington, D.C.

DEAR MR. COMMISSIONER: This directive cancels and supersedes the directive of August 31, 1976, as amended, from the chairman of the Committee for the Implementation of Textile Agreements, which directed you to prohibit entry for consumption, or withdrawal from warehouse for consumption, of certain cotton, wool, and manmade fiber textile products in designated categories for which the Government of the Republic of the Philippines had not issued an appropriate export visa or exempt certification.

Under the terms of the Arrangement Regarding International Trade in Textiles done at Geneva on December 20, 1973, as extended on December 15, 1977; pursuant to the Bilateral Cotton, Wool and Made-Made Fiber Textile Agreement of August 22 and 24, 1978, as amended, between the Governments of the United States and the Republic of the Philippines; and in accordance with the provisions of Executive Order 11651 of March 3, 1972, as amended by Executive Order 11951 of January 6, 1977, you are directed, effective on January 1, 1980, and until further notice, to prohibit entry into the United States for consumption, or withdrawal from warehouse for consumption, of cotton, wool, and manmade fiber textile and apparel products

in categories 300–369, 400–469, and 600–669, produced or manufactured in the Philippines and exported on and after January 1, 1980, which are not visaed or certified for exemption in accordance with the procedures outlined below. Cotton, wool, and manmade fiber textile products which have been exported before January 1, 1980, and visaed or certified in accordance with previously established requirements shall not be denied entry.

Cotton, wool, and manmade fiber textile and apparel products exported from the Philippines on and after January 1, 1980, shall be visaed with a circular stamp in order to be entered into the United States for consumption or withdrawn from warehouse for consumption.

Certain cotton, wool, and manmade fiber textile and apparel products which are exempt from the levels of restraint shall be certified by the Government of the Republic of the Philippines prior to exportation using a rectangular-shaped stamp. The basis for exemption shall be stated on the certification by the use of a description, such as "macrame products," "less than $250," or the name of a particular traditional folklore product which is listed on the enclosure to this letter.

Merchandise shall be visaed or certified by the placing of original stamped markings (the visa or certification) in blue ink on the front of the invoice (Special Customs Invoice Form 5515, successor document, or commercial invoice, when such form is used). Each visa and certification shall include its number and date and the signature of the issuing official. The visa shall also state the correct categories and quantities in the shipment in applicable category units, except, if the quantity indicated on the visa is more than that of the shipment, entry shall be permitted. Otherwise, the categories and quantities shall be those determined by the U.S. Customs Service, or the shipment shall be denied entry.

Facsimiles of the visa and certification stamps are enclosed, as are the names of the officials authorized by the Government of the Republic of the Philippines to issue visas and certifications.

Merchandise imported for the personal use of the importer, and not for resale, does not require a visa or certification for entry, regardless of value.

Merchandise covered by an invoice which has an exempt certification but contains both exempt and nonexempt textile products shall not be permitted entry.

You are directed to permit entry into the United States for consumption and withdrawal from warehouse for consumption of designated shipments of textile and apparel products, produced or manufactured in the Philippines and exported to the United States, notwithstanding the designated merchandise does not fulfill the

aforementioned visa and certification requirements, whenever requested to do so in writing by the chairman of the Committee for the Implementation of Textile Agreements.

In carrying out the above directions, entry into the United States for consumption shall be construed to include entry for consumption into the Commonwealth of Puerto Rico.

The actions taken with respect to the Government of the Republic of the Philippines and with respect to imports of cotton, wool, and manmade fiber textile products from the Philippines have been determined by the Committee for the Implementation of Textile Agreements to involve foreign affairs functions of the United States. Therefore, the directions to the Commissioner of Customs, which are necessary for the implementation of such actions, fall within the foreign affairs exception to the rulemaking provisions of 5 U.S.C. 553. This letter will be published in the Federal Register.

Sincerely,

PAUL T. O'DAY,
Acting Chairman, Committee for the Implementation of Textile Agreements.

Enclosure.

Republic of the Philippines
OFFICE OF THE PRESIDENT
GARMENTS & TEXTILE EXPORT BOARD

CERTIFICATE NO.

EXEMPTED ITEMS

DESCRIPTION

CERTIFIED ON

AUTHORIZED SIGNATURE

Republic of the Philippines
OFFICE OF THE PRESIDENT
GARMENTS & TEXTILE EXPORT BOARD

TEXTILE VISA

CATEGORY QUANTITY

SIGNATURE

TITLE

NO DATE

PHILIPPINE TRADITIONAL FOLKLORE HANDICRAFT TEXTILE PRODUCTS

Philippine items are traditional Philippine products, cut, sewn, or otherwise fabricated by hand in cottage units of the cottage industry. The following is the agreed list of such items:

Batik and hablon fabrics—Handwoven fabrics of the cottage industry.

Banaue cloth—Cotton, handloom fabric in multicolors.

Other handwoven and handloom fabrics of the cottage industry.

Articles and garments made by hand from handwoven and handloomed fabrics.

Hand-crocheted garments, shawls, hats, and accessories, including the "Catsa group" type garments (heavily hand-crochet work in combination with coarse greige or dyed cotton fabric or batik fabric).

Macrame handicraft articles, hand-plied or braided and hand-tied, not combined with woven or knit material (except if such material is used for nonessential decorative and ornamental purposes).

OFFICIALS AUTHORIZED BY THE GOVERNMENT OF THE REPUBLIC OF THE PHILIPPINES TO ISSUE VISAS AND CERTIFICATIONS FOR EXEMPTION FOR TEXTILE AND APPAREL PRODUCTS EXPORTED TO THE UNITED STATES

LUIS R. VILLAFUERTE
Chairman,
Garments and Textile Export Board.

AIDA B. CABARDO,
Officer-in-Charge,
Garments and Textile Export Board Secretariat.

ANTONIO T. CARPIO
Chairman,
Garments and Textile Export Board Technical Committee.

U.S. DEPARTMENT OF COMMERCE,
INDUSTRY AND TRADE ADMINISTRATION,
Washington, D.C., December 20, 1979.

Committee for the Implementation of Textile Agreements

COMMISSIONER OF CUSTOMS
Department of the Treasury,
Washington, D.C.

DEAR MR. COMMISSIONER: This directive amends, but does not cancel, the directive of November 21, 1979, which directed you to prohibit entry for consumption, or withdrawal from warehouse for consumption, of certain cotton, wool, and manmade fiber textile

products in designated categories for which the Government of the Republic of the Philippines had not issued an appropriate export visa or exempt certification.

Under the terms of the Arrangement Regarding International Trade in Textiles done at Geneva on December 20, 1973, as extended on December 15, 1977; pursuant to the Bilateral Cotton, Wool and Man-Made Fiber Textile Agreement of August 22 and 24, 1978, as amended, between the Governments of the United States and the Republic of the Philippines; and in accordance with the provisions of Executive Order 11651 of March 3, 1972, as amended by Executive Order 11951 of January 6, 1977, you are directed, effective on January 1, 1980, to recognize Honesto V. Bonnevie, Chairman, Garments and Textile Export Board Technical Committee, as authorized to issue and sign export visas and exempt certifications, replacing Antonio T. Carpio, who will no longer issue these documents. A revised list of officials of the Government of the Republic of the Philippines who are authorized to issue export visas and certifications for exemption is enclosed.

The actions taken with respect to the Government of the Republic of the Philippines and with respect to imports of cotton, wool, and manmade fiber textile products from the Philippines have been determined by the Committee for the Implementation of Textile Agreements to involve foreign affairs functions of the United States. Therefore, the directions to the Commissioner of Customs, which are necessary for the implementation of such actions, fall within the foreign affairs exception to the rulemaking provisions of 5 U.S.C. 553. This letter will be published in the Federal Register.

Sincerely,

PAUL T. O'DAY,
Acting Chairman, Committee for the Implementation of Textile Agreements.

OFFICIALS AUTHORIZED BY THE GOVERNMENT OF THE REPUBLIC OF THE PHILIPPINES TO ISSUE VISAS AND CERTIFICATIONS FOR EXEMPTION FOR TEXTILE AND APPAREL PRODUCTS EXPORTED TO THE UNITED STATES

LUIS R. VILLAFUERTE,
Chairman,
Garments and Textile Export Board.

AIDA B. CABARDO
Officer-in-Charge,
Garments and Textile Board Secretariat.

HONESTO V. BONNEVIE,
Chairman,
Garments and Textile Export Board Technical Committee.

U.S. DEPARTMENT OF COMMERCE,
INDUSTRY AND TRADE ADMINISTRATION,
Washington, D.C., December 28, 1979.

Committee for the Implementation of Textile Agreements

COMMISSIONER OF CUSTOMS,
Department of the Treasury,
Washington, D.C.

DEAR MR. COMMISSIONER: This directive amends, but does not cancel, the directive of November 21, 1979, from the chairman of the Committee for the Implementation of Textile Agreements, which directed you to prohibit entry for consumption, or withdrawal from warehouse for consumption, of certain cotton, wool, and manmade fiber textile products for which the Government of the Republic of the Philippines had not issued an appropriate export visa or exempt certification.

Under the terms of the Arrangement Regarding International Trade in Textiles done at Geneva on December 20, 1973, as extended on December 15, 1977; pursuant to the Bilateral Cotton, Wool and Man-Made Fiber Textile Agreement of August 22 and 24, 1978, as amended, between the Governments of the United States and the Republic of the Philippines; and in accordance with the provisions of Executive Order 11651 of March 3, 1972, as amended by Executive Order 11951 of January 6, 1977, you are directed to permit entry into the United States for consumption, or withdrawal from warehouse for consumption of cotton, wool, and manmade fiber textile products in categories 300–369, 400–469, and 600–669, produced or manufactured in the Philippines and exported on and after December 20, 1979, for which the new export visa or exempt certification have been used.

The actions taken with respect to the Government of the Republic of the Philippines and with respect to imports of cotton, wool, and manmade fiber textile products from the Philippines have been determined by the Committee for the Implementation of Textile Agreements to involve foreign affairs functions of the United States. Therefore, the directions to the Commissioner of Customs, which are necessary for the implementation of such actions, fall within the foreign affairs exception to the rulemaking provisions of 5 U.S.C. 553. This letter will be published in the Federal Register.

Sincerely,

ARTHUR GAREL,
Acting Chairman, Committee for the Implementation of Textile Agreements.

ERRATUM

In CUSTOMS BULLETIN, Volume 14, No. 1, dated January 2, 1980, T.D. 80–5, page 7, information pertaining to the Finland markka should be deleted.

U.S. Customs Service

General Notice

(062391/521265)

American Manufacturer's Petition

Notice of receipt of American manufacturer's petition requesting the reclassification of footwear known as moon boots

AGENCY: U.S. Customs Service, Department of the Treasury.

ACTION: Notice of receipt of American manufacturer's petition.

SUMMARY: The Customs Service has received a petition from an American manufacturer of waterproof footwear requesting that importations of certain footwear known as moon boots be reclassified as other footwear which is over 50 percent by weight of rubber or plastics under item 700.60, Tariff Schedules of the United States (TSUS), or, in the alternative, as other protective footwear under item 700.53, TSUS. It is currently the position of Customs that the particular moon boots in question, as well as footwear of the same class or kind, are classifiable as other footwear which is over 50 percent by weight of rubber or plastics and having uppers of which over 90 percent of the exterior surface area is rubber or plastics under item 700.58, TSUS.

DATES: Interested parties may comment on this petition. Comments (preferably in triplicate) must be received on or before (60 days from the date of publication of this notice in the Federal Register).

ADDRESS: Comments should be addressed to the Commissioner of Customs, Attention: Regulations and Research Division, room 2335, 1301 Constitution Avenue NW., Washington, D.C. 20229.

FOR FURTHER INFORMATION CONTACT: Donald F. Cahill, Classification and Value Division, U.S. Customs Service, 1301 Constitution Avenue NW., Washington, D.C. 20229; 202-566-8181.

SUPPLEMENTARY INFORMATION:

BACKGROUND

A petition has been filed under section 516 of the Tariff Act of 1930, as amended (19 U.S.C. 1516), by an American manufacturer of water-

proof footwear requesting that importations of certain footwear known as moon boots be reclassified under the provision for other footwear which is over 50 percent by weight of rubber or plastics (except footwear having uppers of which over 50 percent of the exterior surface area is leather) in item 700.60, Tariff Schedules of the United States (TSUS), dutiable at the rate of 20 percent ad valorem and subject to an American selling price (ASP) basis of valuation. Headnote 3(b), schedule 7, subpart 1A, TSUS. In the alternative, the petition argues for reclassification under the provision for other protective footwear which is over 50 percent by weight of rubber or plastics and having soles and uppers of which over 90 percent of the exterior surface area is rubber or plastics (except footwear with uppers of nonmolded construction formed by sewing the parts thereof together and having exposed on the outer surface a substantial portion of functional stitching) in item 700.53, TSUS, dutiable at the rate of 37.5 percent ad valorem. In headquarters letter dated September 14, 1979, file No. 062391, the Customs Service held that moon boots of the kind in question were classifiable under the provision for other footwear which is over 50 percent by weight of rubber or plastics and having uppers of which over 90 percent of the exterior surface area is rubber or plastics (except footwear having uppers of which over 50 percent of the exterior surface area is leather or footwear having foxing or a foxing-like band applied or molded at the sole and overlapping the upper) in item 700.58, TSUS, dutiable at the rate of 6 percent ad valorem.

According to the American manufacturer's petition, the imported moon boot, which extends above the ankle and is designed to be worn over, or in lieu of, other footwear as a protection against water, cold, or inclement weather, is over 50 percent by weight of rubber or plastics, has soles and uppers of which over 90 percent of the exterior surface area is rubber or plastics, and has a premolded rubber/plastic shell bottom, the sides of which extend upward from the bottom of the boot to above the insole of the boot. The sides of the premolded shell bottom are sewn to, and overlap by approximately one-half inch, the polyurethane top portion of the boot. Further, the petition states that the polyurethane portion of the boot is lined with material other than polyvinyl chloride.

The basic issue is whether the subject moon boot has a foxing or foxing-like band applied or molded at the sole which overlaps the upper and which would preclude clasisfication under item 700.58, TSUS.

The petitioner argues that the effect of Customs letter of September 14, 1979, is to rule that in order to constitute foxing or foxing-like band, the overlapping must occur at the insole. The petitioner insists

that the statute does not require that overlapping of the upper occur at the insole.

It is pertinent to note that the portion of the premolded shell, i.e., that portion beginning just below the insole and extending upward about 4 inches, forms part of the upper of the boot inasmuch as the upper is defined as that part of the boot beginning just below the insole. The insole is that part which lies on the inside of the boot, directly beneath the foot. The overlapping occurs, therefore, several inches above the insole, i.e., on the upper of the boot.

Since the upper consists of both molded and nonmolded material, therefore, the petitioner argues, in the alternative, that the moon boot is not precluded from classification under the provision for other protective footwear in item 700.53, TSUS. The petitioner asserts that in order to be excluded from classification under item 700.53, TSUS, the entire upper, and not simply a part of the upper, must be of nonmolded construction. In view of the fact that a portion of the premolded shell of the boot forms part of the upper, petitioner concludes that classification under item 700.53, TSUS, is proper and that such classification would preclude Customs classification under item 700.58, TSUS.

COMMENTS

Pursuant to section 175.21(a) of the Customs Regulations (19 CFR 175.21(a)), the Customs Service invites written comments on this petition from all interested parties.

The American manufacturer's petition, as well as all comments received in response to this notice, will be available for public inspection in accordance with sections 103.8(b) and 175.21(b), Customs Regulations (19 CFR 103.8(b), 175.21(b)), during regular business hours at the Regulations and Research Division, Headquarters, U.S. Customs Service, room 2335, 1301 Constitution Avenue NW., Washington, D.C. 20229.

AUTHORITY

This notice is published in accordance with section 175.21(a) of the Customs Regulations (19 CFR 175.21(a)).

Dated: January 24, 1980.

DONALD W. LEWIS,
Director, Office of Regulations and Rulings.

[Published in the Federal Register, Jan. 30, 1980 (45 F.R. 6881)]

Recent Unpublished Customs Service Decisions

The following listing of recent administrative decisions issued by the Office of Regulations and Rulings, U.S. Customs Service, and not otherwise published, is published for the information of Customs officers and the importing community. Although the decisions are not of sufficient general interest to warrant publication as Treasury decisions, the listing describes the issues involved and is intended to aid Customs officers and concerned members of the public in identifying matters of interest which recently have been considered by the Office of Regulations and Rulings.

A copy of any decision included in this listing, identified by its date and file number, may be obtained in a form appropriate for public distribution upon written request to the Office of Regulations and Rulings, attention: Legal Reference Area, room 2404, U.S. Customs Service, 1301 Constitution Avenue NW., Washington, D.C. 20229. These copies will be made available at a cost to the requester of 10 cents per page. However, the Customs Service will waive this charge if the total number of pages copied is 10 or less.

Decisions listed in earlier issues of the CUSTOMS BULLETIN, through October 24, 1979, are available in microfiche format at a cost of $15.10 (15 cents per sheet of fiche). It is anticipated that addition to the microfiche will be made quarterly and subscriptions are available. Requests for the microfiche now available and for subscriptions should be directed to the Legal Reference Area. Subscribers will automatically receive updates as they are issued and will be billed accordingly.

Dated: January 30, 1980.

HARVEY B. FOX,
Acting Director, Office of Regulations and Rulings.

Date of decision	File No.	Issue
12-26-79	104283	Vessel repair: Dutiability of repairs performed on special purpose vessel during the first 6 months of voyage
12-31-79	104421	Instruments of international traffic: Whether clip-on refrigerator units qualify

Date of decision	File no.	Issue
11-10-79	059982	Classification: Benzenoid mixture (403.90)
12-18-79	060840	Classification: Whether an overlaid fabric patch on pullover sweater constitutes ornamentation (380.00)
11-20-79	060923	Classification: Wool horse coolers (388.40)
12-28-79	060973	Classification: 2,3 dichloroanisole (403.60)
12-12-79	061565	American selling price: Woman's casual, open-toe, open-back slip-on shoe, with terry upper and sock lining (700.60)
12-28-79	061618	Valuation: Whether the American selling price of sandals can be the price at which the domestic article is freely offered to all retailers, if not freely offered to all distributors
12-28-79	062282	Classification: Teflon tubes (771.55, 772.65)
12-19-79	062554	Classification: Plastic skeleton (737.65, 737.95)
12-17-79	062651	Classification: Hydroformer (670.35)
12-18-79	062779	Classification: Plastic milk cup and breast shield (772.42, 774.60)
12-17-79	062955	Classification: Coin medal (740.60)

Decisions of the United States Customs Court

United States Customs Court
One Federal Plaza
New York, N.Y. 10007

Chief Judge

Edward D. Re

Judges

Paul P. Rao
Morgan Ford
Scovel Richardson
Frederick Landis
James L. Watson
Herbert N. Maletz
Besnard Newman
Nils A. Boe

Senior Judge

Samuel M. Rosenstein

Clerk

Joseph E. Lombardi

Customs Decision

(C.D. 4837)

BRANIFF AIRWAYS, INC., PLAINTIFF, *v.* THE UNITED STATES, DEFENDANT

Court No. 75-3-00646

Memorandum Opinion Accompanying Order

[Defendant's motion for rehearing denied.]

(Dated January 17, 1980)

Arnold & Porter (*Paul S. Berger* and *Kenneth A. Letzler* on the brief), for the plaintiff.

Alice Daniel, Assistant Attorney General, *Joseph I. Liebman*, Attorney in

Charge, Field Office for Customs Litigation (*James A. Resti* on the brief), for the defendant.

BOE, Judge: The above-entitled action has been submitted to this court by the respective parties pursuant to a stipulation of fact and submission filed under date of May 31, 1979. In said document it is specifically provided:

> It is further agreed and stipulated by and between counsel for Braniff and the Assistant Attorney General for the United States that:
>
> This case be submitted on the pleadings heretofore filed in this case and this stipulation; * * *.

The question of law presented by the parties entailed whether a manufacturer's negotiated warranty with respect to certain aircraft made in and exported from Great Britain may be included in the appraised constructed value of the said aircraft upon entry into the United States. Neither the pleadings nor the accompanying stipulation provide nor reflect facts as to the determination of general expenses and profit on the basis of constructed value required in section 402(d), Tariff Act of 1930, as amended by the Customs Simplification Act of 1956 (19 U.S.C. 1401a).

In an order made and entered under date of November 14, 1979, this court determined:

> In view, therefore, of the existence of a genuine issue of material facts remaining in connection with the determination of the appraised constructed value of the subject merchandise, judgment on the pleadings and on the accompanying stipulation of facts filed herein cannot be granted; * * *.

In a motion for rehearing filed under date of November 30, 1979, the defendant contends that judgment should be entered for the defendant for the reason that by the omission in the pleadings and the stipulation of the facts required to be established by subsection 2 of section 401(d) of the Tariff Act of 1930, as amended (constructed value statute), the plaintiff has failed to overcome the presumption of correctness attaching to the liquidated appraisement of the merchandise in issue. In support of its contention the defendant relies on the decisions of this court and our appellate court in the cases of: *American Mail Line, Ltd.* v. *United States*, 35 Cust. Ct. 142, C.D. 1735 (1955); *Dorward & Sons Co., Pacific Vegetable Oil Corp.* v. *United States*, 40 CCPA 159, C.A.D. 512 (1953); *Dana Perfumes Corp.* v. *United States*, 63 CCPA 43, C.A.D. 1162, 524 F. 2d 750 (1975).

It is true that the evidence presented to the court therein consisted either in whole or in part of a stipulation of facts between the parties. Notwithstanding that it is acknowledged that a party may be bound by facts to which it has stipulated in the same manner as it is bound

by the oral testimony of witnesses which may have been presented, this court is of the opinion that the rule of law expressed in the aforecited decisions are neither applicable to nor determinative of the motion presently urged by the defendant. In each of said decisions it will be noted that the cause of action was tried and submitted to the court for final determination on the merits. In the presentation of its evidence the plaintiff necessarily must be aware that the court possesses the judicial discretionary authority to determine the case upon the evidence submitted, irrespective of the sufficiency thereof. The decisions relied upon by the defendant, therefore, can be viewed only as an affirmation of the exercise of such discretionary power by the trial court, notwithstanding that subsequent to the entry of judgment it might appear that an order of remand or rehearing could have provided the opportunity for the presentation of additional material evidence. Had this court been faced after a full evidentiary trial with the record as it now stands, that is, a set of pleadings and a stipulation of facts, a situation similar to that presented in *Dorward*, it may have concluded that it was appropriate to decide the case on the merits on the basis of the record before it.

However, the posture of the present action at the time of the entry of this court's order under date of November 14, 1979, denying judgment on the pleadings and accompanying stipulation of facts is far different from an action wherein the court has accepted the same for final determination and, accordingly, has so rendered its decision on the merits, irrespective of whether such an adjudication has been made on evidence submitted on the oral testimony of witnesses or on a stipulation of facts agreed upon by the parties.

What then is the true posture of the present proceeding?

Under the rules of the Customs Court, a cause of action may be determined, other than by an evidentiary trial, by the following:

(1) Submission on agreed statement of facts as provided by rule 8.1;

(2) Judgment on the pleadings as provided by rule 4.9; and

(3) Summary judgment as provided by rule 8.2.

It is patently evident that the submission to this court on the pleadings and the accompanying stipulation of facts in the above-entitled action is not within the purview nor intent of rule 8.1. As clearly contemplated by section (a) of the rule, this procedure is intended to be utilized only in such cases wherein an agreed settlement of an action has been made by the parties. As further provided by the rule such a statement of agreed settlement together with a proposed decision and judgment shall be submitted to the court. No decision by the court is required other than the approval of the statement of

agreed settlement by the entry of the proposed decision and judgment which has been submitted in connection therewith.

The stipulation filed in the above-entitled action has been accepted by this court, in accordance with the specific terms thereof, as a submission on the pleadings together with the accompanying stipulated facts within the purview of rule 4.9. The foregoing rule clearly defines the manner in which such a submission shall be treated by providing in pertinent part:

> * * * If, on a motion for judgment on the pleadings, matters outside the pleadings are presented to and are not excluded by the court, the motion *shall* be treated as one for summary judgment and shall be disposed of as provided in rule 8.2, and all parties shall be given reasonable opportunity to present all material made pertinent to such motion by rule 8.2. [Italic supplied.]

It would appear clear that the stipulation of facts submitted to this court in conjunction with the submission on the pleadings indeed are "matters outside the pleadings" within the contemplation of the aforequoted rule and that, accordingly, the court is without discretion but to treat the submission as one for summary judgment. *See Transamerican Electronics Corp.* v. *United States*, 70 Cust. Ct. 35, C.D. 4405 (1973).

The provisions of rule 8.2 provide that summary judgment may be rendered in favor of any party entitled thereto as a matter of law "if the pleadings, depositions, and admissions on file, together with the affidavits, if any, show that there is no genuine issue as to any material fact" (rule 8.2(d)). Practice in the Customs Court repeatedly has been punctuated by a denial of summary judgment where the court in its discretion has found a genuine issue of material fact to exist.

Predicated on the foregoing, this court in its prior order denying judgment on the pleadings and the accompanying stipulated facts submitted by the parties has found that an issue as to a material fact exists. In short, this court has determined that the action is not "ripe" at this time for an adjudication of the question of law concerning which the respective parties mutually seek a decision.[1] The conduct of this court in so doing is dictated by the rules of procedure established herein as they may be applied to the specific proceedings brought before it, not by what might have been the otherwise subjective intent of counsel.

In the case of *C. J. Tower & Sons of Buffalo, Inc., a/c Metco, Inc.* v. *United States*, 68 Cust. Ct. 377, C.R.D. 72-11 (1972), Judge Herbert

[1] This discretionary judicial prerogative is not without precedent. In the case of *United States* v. *H. A. Gogarty, Inc., a/c A. H. Walter & Co., Inc.*, 42 Cust. Ct. 680, R.D. 9468 (1959), Judge Donlon of this court, "in the interest of justice," set aside a stipulation of facts as insufficient to permit a determination of the action before the court and restored the case to the trial calendar for the presentation of such additional proof as might be required.

Maletz of this court in a well-reasoned and comprehensive opinion has examined the effect of denial of judgment on the pleadings upon the right of a party to subsequently prove facts necessary to sustain its claim. Although in the *Tower* case cross-motions were presented by the respective parties, the reasoning of the court is completely applicable to the proceedings at bar. The court in its decision stated:

> It is important to add, however, that although plaintiff proceeded on the wrong legal theory, it does not necessarily follow that it is precluded from proving the facts necessary to establish its claim or that defendant is thereby entitled to judgment on its cross-motion. *Ramsouer* v. *Midland Valley R. Co.*, 135 F. 2d 101 (CA8 1943); *Ideal Development Co.* v. *Costello*, 217 F. Supp. 365 (E.D. Pa. 1963). In this latter connection, the test, on defendant's motion for judgment on the pleadings (or summary judgment), is whether, viewing the pleaded facts in the light most favorable to plaintiff, there is any basis upon which the latter might recover. In other words, the opposing party must be given the benefit of all reasonable inferences favorable to it which might be drawn from the pleadings. *United States* v. *Diebold, Inc.*, 369 U.S. 654 (1962); *Empire Electronics* v. *United States*, 311 F. 2d 175 (CA2 1962); *National Labor Relations Board* v. *Weirton Steel Company*, 146 F. 2d 144 (CA3 1944); *Ramsouer* v. *Midland Valley R. Co.*, *supra*, 135 F. 2d 101. If it is at all possible that plaintiff may be able to meet its burden of proof, it is inappropriate to grant judgment against it. *Williams* v. *Chick*, 373 F. 2d 330 (CA8 1967); *Melo-Sonics Corp.* v. *Cropp*, 342 F. 2d 856 (CA3 1965); *Dotschay* v. *National Mutual Ins. Co. of District of Columbia*, 246 F. 2d 221 (CA5 1957); *Dyson* v. *General Motors Corporation*, 298 F. Supp. 1064 (E.D. Pa. 1969).
>
> Considering the present pleadings with the foregoing in mind, it cannot be said with any degree of certainty that plaintiff would be unable to offer proofs tending to establish the ultimate facts necessary to support its claim for classification of the merchandise as nickel powder under item 620.32, specifically, that it is a nickel alloy in a basic shape or form. This being the situation, plaintiff should not be foreclosed from the opportunity to present its proofs. *Melo-Sonics Corp.* v. *Cropp*, *supra*, 342 F. 2d 856; *Williams* v. *Chick*, *supra*, 373 F. 2d 330. [Italics in original; emphasis supplied.]

The acceptance of the contention of the defendant inevitably would lead to the fallacious ultimate conclusion that notwithstanding the nature of any proceeding, whether it be in the form of judgment on the pleadings or in the form of summary judgment, a stipulation of facts between parties would require the entry of judgment for the defendant if, in such a stipulation, the absence or omission of any material fact precludes the plaintiff from overcoming the presumption of correctness attaching to the liquidated appraisement or classification. Such a conclusion would destroy the basic and fundamental obligation of a trial court, namely—to determine when a cause of action is "ripe" for

the determination of a question of law that might have been presented by the parties. It likewise would destroy and leave valueless the very purpose and intent contemplated by our respective procedures for summary determinations. If a party in attempting to seek a speedy adjudication by presenting its action to the court for possible determination by means of judgment on the pleadings or summary judgment finds itself precluded from offering further evidence which the court believes necessary to the ultimate determination of the action, future resort to such procedures most assuredly could not be expected to be utilized.

The plaintiff in its response to defendant's motion for rehearing has indicated its willingness and ability to provide the proof required by the statute. It is indeed difficult to perceive wherein the rights of the defendant are prejudiced by the resolution of an existing material issue of fact in the manner as prescribed by rule 8.2 prior to the adjudication of the question of law involved herein. In conformity, therefore, with the provisions of rule 8.2(e), after having had a further opportunity to confer with respective counsel, the court may ascertain what material facts, if any, in good faith continued to be in issue and with the agreement of counsel provide for the presentation of further stipulations, affidavits, or other evidence for the resolution of such material facts remaining in issue in order to expeditiously permit the adjudication of the question of law originally presented by the parties for determination by this court; now therefore, it is hereby

ORDERED that the motion of the defendant for rehearing of the order of this court made and entered on the 14th day of November, 1979, denying judgment on the pleadings and the accompanying stipulated facts submitted by the parties be and is hereby denied.

Decisions of the United States Customs Court

Customs Rules Decision

(C.R.D. 80-1)

ALBERTA GAS CHEMICALS, INC., PLAINTIFF, *v.* UNITED STATES, DEFENDANT

Court No. 79-8-01295

On Defendant's Motion for Dismissal and Alternative Motion for Summary Judgment

[Defendant's motions denied.]

(Dated January 17, 1980)

Freeman, Meade, Wasserman & Schneider, Esqs. (*Jack Gumpert Wasserman, Herbert Peter Larsen* and *Philip Yale Simons*, Esqs., of counsel) for the plaintiff.

Alice Daniel, Assistant Attorney General, *David M. Cohen*, Director, Commercial Litigation Branch, and *Sheila N. Ziff*, trial attorney, Esqs., for the defendant.

NEWMAN, Judge:

INTRODUCTION

Plaintiff, an importer of methyl alcohol from Canada, contests the exclusion of its merchandise from entry by the Regional Commissioner of Customs at the Port of New York. Presently before me are defendant's motion for dismissal on the grounds that the court lacks jurisdiction of the subject matter and the action fails to present any justiciable issue; and alternatively, defendant's motion for summary judgment with respect to the merits of the complaint.

I have concluded that defendant's motions must be denied.

THE FACTS

The facts pertinent to the instant motions are not in dispute, and may be briefly summarized:

On March 23, 1979, the Treasury Department (Treasury) determined that methyl alcohol from Canada is being, or is likely to be,

sold at less than fair value (LTFV) within the meaning of section 201(a) of the Antidumping Act of 1921, as amended (19 U.S.C. 160(a)). That determination was published in the Federal Register on March 30, 1979 (44 F.R. 19090).

On June 29, 1979, the U.S. International Trade Commission determined, in investigation No. AA1921–202, that an industry in the United States is likely to be injured by reason of the importation of methyl alcohol from Canada which Treasury had determined is being, or is likely to be, sold at LTFV. The Commission's determination was published on July 12, 1979 (44 F.R. 40734).

On July 23, 1979, Treasury issued a "Finding of Dumping" respecting methyl alcohol from Canada (T.D. 79–210), which finding was published in the Federal Register on July 27, 1979 (44 F.R. 44154).

The subject merchandise was exported from Canada on August 13, 1979. Entry papers (Customs form 7501) [1] and a check for estimated duties were presented by plaintiff to the appropriate Customs officer at the Port of New York an August 15, 1979. However, the entry was rejected by Customs for the reason that the importer refused to file an antidumping bond (Customs form 7591) in accordance with 19 U.S.C. 167 and 19 CFR 153.50.[2] Attached to the proffered entry papers is a statement that plaintiff did not file a bond "for the reason that there exists no valid and legal finding under the Antidumping Act of 1921 which is applicable to this class or kind of merchandise, and that the finding of the Secretary of the Treasury, T.D. 79–210, 44 F.R. 4415 of July 27, 1979, purportedly made pursuant to section 201 of the Act is illegal, *ultra vires*, null, and void, and that its publication was erroneous and contrary to law." Also attached to the tendered entry papers is a "Correction Slip" in which Customs advised: "Importer must obtain and present antidumping bond (Customs form 7591). See Customs Regulations 153.50 and 19 U.S.C. 167. T.D. 79–210 (the Finding of Dumping) applies."

The complaint in this action contests the exclusion of plaintiff's merchandise from entry and delivery "and the legality of all orders and findings of the U.S. International Trade Commission and of the Secretary of the Treasury entering into the Regional Commissioner's decision." In this connection, plaintiff alleges that the sole ground for the exclusion of the subject merchandise from entry was that plaintiff did not proffer an antidumping bond; and that the sole ground for the Regional Commissioner's demand for a bond was the Secretary's finding of dumping. Continuing, the complaint alleges that the Regional Commissioner erred in demanding, pursuant to section 208

[1] Consumption entry No. 79-638078-8.

[2] Plaintiff states in its brief that the subject merchandise is presently held in "General Order," awaiting the outcome of this case.

of the Antidumping Act of 1921, as amended (19 U.S.C. 167), the posting of an antidumping bond (Customs form 7591), and in excluding the merchandise from entry and delivery to plaintiff in the absence of such bond; that the Secretary's finding of dumping is illegal, *ultra vires*, null, and void; and that plaintiff is entitled to the entry and delivery of its merchandise without the posting of an antidumping bond because no legal and valid finding of dumping covers the merchandise. The complaint then sets forth three causes of action, each of which controverts some phase of the antidumping proceedings leading to the Secretary's finding of dumping, including the Secretary's LTFV investigation and determination, and the subsequent affirmative injury determination by the Commission. The relief sough by plaintiff in its complaint is an adjudication that the Secretary's finding of dumping is illegal, null, and void; that the Antidumping Act of 1921 is therefore inapplicable to exportations of methyl alcohol from Canada; and an order that the Regional Commissioner accept plaintiff's entry and deliver the merchandise to plaintiff without filing an antidumping bond. The complaint does not challenge the assessment of any duty nor seek a refund.

STATUTES INVOLVED

The statutory provisions involved, so far as pertinent, read:

19 U.S.C. 167:

> In the case of all imported merchandise * * * of a class or kind as to which the Secretary of the Treasury has made public a finding [of dumping] * * *, and delivery of which has not been made by the appropriate customs officer before such finding has been so made public * * *, it shall be unlawful for such customs officer to deliver the merchandise until [the importer] has * * * given bond to such customs officer * * *.

19 U.S.C. 1514:

> (a) *Finality of decisions; return of papers*
>
> Except as provided in section 1501 of this title (relating to voluntary reliquidations), section 1516 of this title (relating to petitions by American manufacturers, producers, and wholesalers), section 1520 of this title (relating to refunds and errors), and section 1521 of this title (relating to reliquidations on account of fraud), decisions of the appropriate customs officer, including the legality of all orders and findings entering into the same, as to—
>
> (1) the appraised value of merchandise;
>
> (2) the classification and rate and amount of duties chargeable;
>
> (3) all charges or exactions of whatever character within the jurisdiction of the Secretary of the Treasury;
>
> (4) the exclusion of merchandise from entry or delivery under any provision of the customs laws;
>
> (5) the liquidation or reliquidation of an entry, or any modification thereof;

(6) the refusal to pay a claim for drawback; and

(7) the refusal to reliquidate an entry under section 1520(c) of this title,

shall be final and conclusive upon all persons (including the United States and any officer thereof) unless a protest is filed in accordance with this section, or unless a civil action contesting the denial of a protest, in whole or in part, is commenced in the U.S. Customs Court in accordance with section 2632 of title 28 within the time prescribed by section 2631 of that title. When a judgment or order of the U.S. Customs Court has become final, the papers transmitted shall be returned, together with a copy of the judgment or order to the appropriate customs officer, who shall take action accordingly.

* * * * * * *

28 U.S.C. 1582:

(a) The Customs Court shall have exclusive jurisdiction of civil actions instituted by any person whose protest pursuant to the Tariff Act of 1930, as amended, has been denied, in whole or in part, by the appropriate customs officer, where the administrative decision, including the legality of all orders and findings entering into the same, involves: (1) The appraised value of merchandise; (2) the classification and rate and amount of duties chargeable; (3) all charges or exactions of whatever character within the jurisdiction of the Secretary of the Treasury; (4) the exclusion of merchandise from entry or delivery under any provisions of the customs laws; (5) the liquidation or reliquidation of an entry, or a modification thereof; (6) the refusal to pay a claim for drawback; or (7) the refusal to reliquidate an entry under section 520(c) of the Tariff Act of 1930, as amended.

* * * * * * *

PARTIES' CONTENTIONS

The nub of defendant's motion to dismiss is that plaintiff has not raised any issues which may properly be considered by this court in reviewing an administrative decision (including the legality of all orders and findings entering into the same) as to the exclusion of merchandise from entry or delivery under any provision of the Customs law.[3] Specifically, defendant's position is that, until an entry has been liquidated and dumping duties assessed, no justiciable issue can be presented concerning the administrative findings and determinations made in the antidumping proceedings, and therefore this action was brought prematurely. Defendant further maintains that plaintiff's action is, in essence, one for a declaratory judgment, which this court is without jurisdiction to grant.

The gravamen of plaintiff's complaint is that its merchandise has been wrongfully excluded from entry and delivery under the provi-

[3] Defendant's reply brief (p. 2) contends that "the only matters reviewable at this time would be those relating to the bond requirements, such as the validity of the foregoing provisions [19 U.S.C. 167 and 19 C.F.R. 153.50 and 153.51(b)], a claim of procedural irregularity pertaining to the bond requirement, or an assertion that the dumping finding is inapplicable to the involved merchandise (e.g., that the subject shipment is not methyl alcohol or is not from Canada)..."

sions of the Customs laws requiring the filing of an antidumping bond (19 U.S.C. 167; 19 CFR 153.50); that this court possesses jurisdiction under 28 U.S.C. 1582(a)(4) to review the denial of a protest against such exclusion, including the legality of all orders and findings entering into the same. On the latter aspect, plaintiff urges that an antidumping bond was demanded by Customs because of the Secretary's finding of dumping (and the underlying determinations in the antidumping proceeding), and consequently the legality of the finding presents a justifiable issue within the court's jurisdiction under 28 U.S.C. 1582(a)(4) to review "the legality of all orders and findings entering into the [exclusion]."

THE ISSUE

As may be noted, under 28 U.S.C. 1582(a)(4) this court has exclusive jurisdiction to review the denial of a protest against "the exclusion of the merchandise from entry or delivery under any provisions of the Customs laws," and "the legality of all orders and findings entering into the same." The crux of the issue in this case is whether the finding of dumping and administrative determinations in the antidumping proceedings contested in the complaint constitute "orders and findings entering into" the administrative decision excluding the merchandise from entry.

OPINION

Preliminarily, it should be observed there is no dispute that under 28 U.S.C. 1582(a) this court has jurisdiction over an action brought by an importer contesting an assessment of dumping duties and all underlying administrative determinations. Thus, "(i)n such cases (the Customs Court) may review the actions of the Secretary of the Treasury and the Tariff Commission (now U.S. International Trade Commission) to determine whether the procedures prescribed by Congress have been followed and whether the Secretary, the Tariff Commission, or their delegates have proceeded within the statutory authority or whether their actions are *ultra vires* and void." *Matsushita Electric Industrial Company, Ltd., et al. v. United States Treasury Department et al.*, 67 Cust. Ct. 328, 336, C.D. 4292 (1971), *aff'd*, 60 CCPA 85, C.A.D. 1086, 485 F. 2d 1402 (1973), *cert. denied*, 414 U.S. 821 (1973).

But here, there has been no assessment of dumping duties. Indeed, the subject merchandise has been excluded from entry, and plaintiff predicates this court's jurisdiction on 28 U.S.C. 1582(a)(4), pursuant to which this court may review the denial of a protest against the exclusion of merchandise from entry or delivery under any provision of the Customs laws, including the legality of *all* orders and findings entering into the same.

As we have seen, the merchandise was excluded from entry and delivery solely because of plaintiff's refusal to file the antidumping bond required by 19 U.S.C. 167 and the Customs Regulations, cited *supra*. Plaintiff insists that it is entitled to entry and delivery of the subject merchandise without filing an antidumping bond on the ground that the finding of dumping is illegal, null, and void.

Plainly, the legality of Customs demand for a bond and the exclusion of the merchandise from entry because of plaintiff's refusal to file a bond rest upon the legality of the underlying finding of dumping. If that finding is valid, then Customs demand for a bond is unquestionably correct. If, on the other hand, the Secretary's finding is invalid, as claimed by plaintiff, then the insistence of Customs upon the filing of a bond is erroneous, and plaintiff is entitled to acceptance of its proffered entry and the delivery of the subject merchandise (assuming all other entry requirements have been satisfied).

If plaintiff had complied with Customs demand for the posting of an antidumping bond and entered its merchandise, any issue raised after entry concerning the legality of the exclusion for refusal to file a bond would be moot. Since the court is not empowered to decide moot questions, plaintiff acted appropriately and within its rights in refusing to file a bond and presenting the issue of the legality of the exclusion of its merchandise from entry pursuant to 19 U.S.C. 1514(a)(4) and 28 U.S.C. 1582(a)(4). *Cf. Southwestern Sugar & Molasses Co., Inc.* v. *United States*, 21 Cust. Ct. 8, C.D. 1117 (1948). Plaintiff's claim falls within a class of administrative decisions which are contestable prior to liquidation and payment of duties. *Schenley Distillers, Inc.* v. *United States*, 65 Cust. Ct. 651, C.D. 4152 (1970); *Central Commodities Corp.* v. *United States*, 6 Cust. Ct. 452, C.D. 514 (1941). Further, inasmuch as plaintiff's action falls squarely within the relief this court may grant under 28 U.S.C. 1582(a)(4), defendant's contention that plaintiff's action calls for a declaratory judgment is totally without merit.

The right of the plaintiff to challenge an underlying finding entering into the exclusion of its merchandise from entry is expressly authorized by that portion of 19 U.S.C. 1514(a) which provides for filing of a protest against "decisions of the appropriate customs officer, *including the legality of all orders and findings entering into the same.*" (Italic added.) It is true that the finding of dumping *per se* did not exclude the merchandise from entry. Nevertheless, the Secretary's finding is inextricably linked to and bound up with the subsequent chain of events: Customs demand for an antidumping bond (predicated upon the finding), plaintiff's refusal to file such bond, and the ultimate exclusion of the merchandise from entry because of that refusal. Hence, I conclude that the Secretary's finding of dumping

entered into the administrative decision excluding the merchandise from entry and delivery; and that the complaint presents justiciable issues respecting the legality of that finding within the jurisdiction of this court under 28 U.S.C. 1582(a) (4). Defendant's highly restrictive interpretation of the statute to the contrary is not supported by any legislative history called to my attention, and I find that prior judicial decisions relied on by defendant are readily distinguishable.

Defendant relies heavily on my prior decision in *Alberta Gas Chemicals, Inc.* v. *W. Michael Blumenthal, Secretary of the Treasury, et al.*, 82 Cust. Ct. 77, C.D. 4792, 467, F. Supp. 1245 (1979). There, the plaintiff challenged the validity of the Treasury's antidumping investigation prior to liquidation and assessment of dumping duties, and brought an action for a declaratory judgment and ancillary relief pursuant to 28 U.S.C. 2201 and 2202. Plaintiff moved for summary judgment, and defendant cross-moved for dismissal on the ground that the statutory prerequisites for invoking the court's jurisdiction under 28 U.S.C. 1582 had not been complied with. In granting defendant's motion to dismiss for lack of jurisdiction, I rejected plaintiff's argument that it was contesting an order or finding entering into a *"charge or exaction"* within the purview of subdivision (a)(3) of sections 1582 and 1514. Moreover, in the prior case, since no finding of dumping was in effect, no antidumping bond could be demanded, and there was no exclusion of merchandise from entry or delivery. However, the thrust of plaintiff's present action is to challenge an exclusion of its merchandise from entry as authorized by subdivision (a)(4) of sections 1582 and 1514, which makes the prior case irrelevant to the present issue. The other cases cited by defendant for the proposition that plaintiff's action is premature [4] are distinguishable for the same reason, viz, they did not involve an action against exclusion of merchandise from entry, and thus the court's jurisdiction under 28 U.S.C. 1582(a)(4) was not invoked, as in the instant case.

Additionally, defendant argues that *Central Commodities Corp.* v. *United States*, 6 Cust. Ct. 452, C.D. 514 (1941) is controlling on the facts in the instant case. In *Central Commodities*, plaintiff filed a protest against the collector's exclusion of merchandise from entry because of the plaintiff's failure to deposit (in addition to a bond covering estimated countervailing duties and a certified check for regular import duties) payment of estimated countervailing duties of 25 percent.

---

[4] *J. C. Penney Company, Inc.* v. *United States Treasury Department* 439 F. 2d 63 (C.A. 2, 1971), *cert. denied*, 404 U.S. 869 (1971); *In re N.C. Trading, A Division of Minemet Metals, Inc.*, 66 CCPA —, C.A.D. 1215, 586 F. 2d 221 (1978); *Matsushita Electric Industrial Company, Ltd., et al.* v. *United States Treasury Department et al.*, 67 Cust. Ct. 328, C.D. 4292 (1971), *aff'd*, 60 CCPA 85, C.A.D. 1086, 485 F. 2d 1402 (1973), *cert. denied*, 414 U.S. 821 (1973); *Russell Stanfield Dexter* v. *United States*, 78 Cust. Ct. 179, C.R.D. 77-1, 424 F. Supp. 1069 (1977); *Flintkote Company, Glens Falls Division* v. *W. Michael Blumenthal, Secretary of the Treasury*, Civil Action 78-CV-640 (N.D.N.Y. 1979) (unreported memorandum decision), *aff'd*, 596 F. 2d 51 (C.A. 2, 1979).

Plaintiff sought an order directing the collector to permit entry and accept the deposit of duty which the plaintiff estimated was due. In addition to the issue concerning the correct estimated duties to be deposited upon entry, plaintiff attempted to argue the issue as to whether the merchandise was subject to countervailing duties. Respecting the latter, Judge Cline commented (6 Cust. Ct. at 455): "That argument relates to the rate or amount of duties and the law gives the importer the right to protest against the rate or amount of duties within 60 days after, but not before, liquidation."

In short, *Central Commodities Corp.* is clearly distinguishable from the present case, since here, plaintiff's challenge to the legality of the finding of dumping *as underlying the imposition of an antidumping bond* does not involve any question of rate or amount of duties.

Defendant also cites in support of its position *McKesson & Robbins (Inc.)* v. *United States*, 43 Treas. Dec. 214, T.D. 39511 (1923) and *S. J. Charia & Co.* v. *United States*, 33 Cust. Ct. 107, C.D. 1642, 135 F. Supp. 727 (1954), *aff'd*, 43 CCPA 147, C.A.D. 622, 248 F. 2d 124 (1956).

In *McKesson*, the Board of General Appraisers (predecessor of the Customs Court) held that the collector's refusal to accept tender of an entry for withdrawal and transportation in bond to the Port of New Orleans, of opium which had been imported into New York, was properly protestable under section 514 of the Tariff Act of 1922. Noting that the collector had refused to accept entry in accordance with certain regulations of the Federal Narcotics Control Board allowing crude opium to be entered for transportation in bond only between certain designated ports, which did not include New Orleans, the Board stated that *the sole issue presented was whether or not the Federal Narcotics Control Board exceeded its statutory power in promulgating the regulations cited by the collector as authority for his decision refusing the tendered entry of the importer.*

And in *Charia*, the collector excluded from entry certain cigar lighters that were sought to be imported into the United States by plaintiff. The exclusion of plaintiff's entry was predicated upon a Presidential order issued pursuant to the provisions of section 337 of the Tariff Act of 1930 relating to unfair practices in the import trade. Plaintiff contested the exclusion *by disputing that the underlying Presidential order was applicable to its merchandise and challenging the constitutionality of that order.*

Neither *McKesson* nor *Charia* supports the narrow construction of 28 U.S.C. 1582(a)(4) urged by defendant. Rather, these cases support plaintiff's claim that, under the "exclusion jurisdiction" of this court, the legality of all underlying findings and orders (and regulations) may be determined. As I construe the relevant jurisdic-

tional statutory provisions herein, it is entirely appropriate for plaintiff to challenge the underlying findings entering into the exclusion of its merchandise from entry for refusal to file an antidumping bond, and plaintiff was not required to make entry and await a liquidation and assessment of dumping duties. The fact that the finding of dumping (and underlying determinations) sought to be challenged by plaintiff in this action could be contested after entry, liquidation and assessment of dumping duties does not preclude plaintiff from proceeding expeditiously in this action against exclusion to protect any present rights it may have to enter its merchandise without filing an antidumping bond. This approach is consistent with those cases relied upon by defendant wherein the court held that an importer whose entry is rejected has a cause of action arising out of the refusal to accept the entry, as well as a *separate* cause of action arising out of liquidation of the entry. See *A. N. Deringer, Inc.* v. *United States*, 37 Cust. Ct. 166, C.D. 1818 (1956), and *Border Brokerage Co.* v. *United States*, 43 Cust. Ct. 226, C.D. 2131 (1959), *rev'd on other grounds*, 48 CCPA 10, C.A.D. 754 (1960).

We reach defendant's contention that if plaintiff's position herein is accepted, other importers by refusing to comply with an entry requirement will be able to obtain expeditious judicial review under 28 U.S.C. 1582(a)(4) of contested classifications, valuations, and a wide range of other administrative decisions without payment of any liquidated duties. I find no merit in that argument since under 28 U.S.C. 1582(a)(4), this court may review only the legality of orders and findings *entering into the exclusion of merchandise from entry or delivery*. Hence, only where the classification of merchandise enters into the administrative decision excluding the merchandise from entry or delivery could the classification be contested prior to liquidation. For example, in *Western Dairy Products, Inc.* v. *United States*, 72 Cust. Ct. 75, C.D. 4506, 373 F. Supp. 568 (1974), *aff'd*, 62 CCPA 37, C.A.D. 1142, 510 F. 2d 376 (1975), the issue was whether certain calcium-reduced, dried, skim milk was classifiable under the TSUS as an article of milk and thus subject, as Customs determined, to certain license requirements proclaimed by the President pursuant to the Agricultural Adjustment Act, or classifiable under the TSUS as an edible preparation, not specially provided for. Customs refused to allow the withdrawal of the merchandise from warehouse for consumption because of plaintiff's failure to obtain a license from the Secretary of Agriculture. Plaintiff having failed to establish that the import was not an article of milk, as classified by Customs, the court held that the merchandise was subject to the license, and the Government's decision refusing to release the product for consumption in the United States without a license was sustained.

Finally, we consider plaintiff's reference to section 1001(a) of the Trade Agreements Act of 1979, Public Law 96–39, 93 Stat. 300 et seq. which became effective January 1, 1980. On this aspect, plaintiff correctly points out that a new section 516A of the Tariff Act of 1930 (as enacted by sec. 1001(a) of the Trade Act) greatly expands the opportunity for judicial review in this court of the administrative determinations in countervailing and antidumping duty matters prior to the imposition of such duties.[5] While these new provisions, which expedite judicial review, are undoubtedly salubrious, I must agree with defendant's contention that they have no applicability in the instant case.

CONCLUSION

For the reasons stated herein, I have concluded that pursuant to 28 U.S.C. 1582(a)(4) this court clearly has jurisdiction to determine the legality of the exclusion of plaintiff's merchandise from entry for refusal to file an antidumping bond, and in that connection to decide the legality of the Secretary's underlying finding of dumping (T.D 79–210). Accordingly, I hold that the complaint presents justiciable issues that may be determined in this action; and therefore, defendant's motion to dismiss is denied.

Defendant's alternative motion for summary judgment is premature and therefore not properly before the court at this juncture. Rule 8.2(a) of this court provides that a motion for summary judgment may be made "*at any time after a responsive pleading has been filed.*" [Italic added.] Defendant has not filed an answer or other responsive pleading to the complaint. Hence, defendant's suggestion that the court ignore the procedural requirements of its own rule 8.2(a) and instead follow rule 56(b) of the Federal Rules of Civil Procedure, which allows the party against whom a claim is asserted to move, at any time, for a summary judgment, is without merit.[6] Accordingly, defendant's alternative motion for summary judgment respecting the merits of the complaint is denied. Defendant shall serve and file its answer to the complaint within 30 days after service of this order.

---

[5] Under sec. 516A(a)(2)(A), an action may be commenced by any person with standing within 30 days after the date of publication in the Federal Register of any antidumpting or countervailing order or notice of determination.

[6] Rule 8.2(b), as amended on Jan. 1, 1980, permits a party against whom a claim is asserted to move for a summary judgment at any time after the filing of a complaint. This amendment is applicable to "*further proceedings* in actions then pending, except to the extent that in the opinion of the court (its) application in a particular action then pending would not be feasible or would work injustice, in which event the former procedure applies" [Italic added]. In the instant case, both defendant's alternative motion for summary judgment and plaintiff's opposition thereto were filed prior to Jan. 1, 1980, in reliance upon the provisions of old rule 8.2, and hence are *pending* proceedings rather than "further proceedings." Indeed, neither plaintiff nor defendant made any reference whatever to the proposed new rule. Moreover, plaintiff's memoranda do not address the merits of the case.

Under these circumstances, it is clear that the new rule has no application in this case, and in any event its application would "work injustice" to plaintiff.

Decisions of the United States Customs Court

Abstracts

Abstracted Protest Decisions

DEPARTMENT OF THE TREASURY, *January 21, 1980.*

The following abstracts of decisions of the United States Customs Court at New York are published for the information and guidance of officers of the customs and others concerned. Although the decisions are not of sufficient general interest to print in full, the summary herein given will be of assistance to customs officials in easily locating cases and tracing important facts.

ROBERT E. CHASEN,
Commissioner of Customs.

DECISION NUMBER	JUDGE & DATE OF DECISION	PLAINTIFF	COURT NO.	ASSESSED	HELD	BASIS	PORT OF ENTRY AND MERCHANDISE
				Par. or Item No. and Rate	Par. or Item No. and Rate		
P80/16	Ford, J. January 14, 1980	Hawker Siddeley Canada, Ltd., et al.	76-6-01369, etc.	Item 692.35 5.5%	Item 692.30 Free of duty	U.S. v. Norman G. Jensen, Inc. (C.A.D. 1183)	Champlain-Rouses Point (Ogdensburg) Skidder tractors
P80/17	Maletz, J. January 14, 1980	Nadel & Sons Toy Corp.	78-4-00597	Item 737.90 17.5%	Item 734.20 5.5%	Mego Corp. v. U.S. (C.A. D. 1137)	New York "Pin ball game" or "slot machine game"

Judgment of the U.S. Customs Court in Appealed Case

JANUARY 17, 1980

APPEAL 79–8.—United States *v.* Reliable Chemical Company.—PROTEST FILED PRIOR TO OFFICIAL NOTICE OF LIQUIDATION—MOTION TO DISMISS FOR LACK OF JURISDICTION—MOTION TO SUSPEND.—Order of July 26, 1978 (C.R.D. 78–11), rehearing denied October 11, 1978, denying defendant's motion to dismiss reversed September 13, 1979 (C.A.D. 1232); action dismissed for lack of jurisdiction.

International Trade Commission Notices

Investigations by the U.S. International Trade Commission

DEPARTMENT OF THE TREASURY

The appended notices relating to investigations by the U.S. International Trade Commission are published for the information of Customs officers and others concerned.

R. E. CHASEN,
Commissioner of Customs.

[TA-203-6]

COLOR TELEVISION RECEIVERS AND SUBASSEMBLIES THEREOF

Notice of Prehearing Conference and Request for Prehearing Briefs

Background.—The U.S. International Trade Commission on December 31, 1979, instituted investigation No. TA-203-6, "Color Television Receivers and Subassemblies Thereof," and ordered a public hearing to be held in connection with the investigation on March 5, 1980 (45 F.R. 1950, January 9, 1980).

Prehearing conference ordered.—To facilitate the hearing process, a prehearing conference will be held on February 14, 1980, at 10 a.m., e.s.t., in room 117 of the U.S. International Trade Commission Building, 701 E Street NW., Washington, D.C. At this time copies of the Commission's report for the fourth calendar quarter 1979 on color television receiver imports, employment, man-hours, U.S. production, shipments, inventories, and prices will be made available. The prehearing conference will deal with such matters as allocating time for oral presentations at the public hearing, agreements on statistics, and stipulations.

Prehearing briefs.—To facilitate the hearing process, it is requested that persons wishing to appear at the hearing submit prehearing briefs enumerating and discussing the issues which they wish to raise at the

hearing. Such prehearing briefs should be submitted to the Secretary to the Commission no later than the close of business Thursday, February 28, 1980. The Secretary will make copies of such briefs available to the public. While this does not prohibit submission or prepared statements in accordance with section 201.12(d) of the Commission's Rules of Practice and Procedure (19 CFR 201.12(d)), it would be unnecessary to submit such a statement if a prehearing brief is submitted instead. Any such statements will, of course, be made a part of the transcript. Oral presentations, however, should, to the extent possible, be limited to issues raised in the prehearing briefs.

Persons not represented by counsel or public officials who have relevant matters to present may give testimony without regard to the suggested prehearing procedures outlined above.

By order of the Commission.

Issued: January 18, 1980.

KENNETH R. MASON,
Secretary.

(332-106)

Identification of Chemicals for the New Tariff Nomenclature for Certain Benzenoid Chemicals

AGENCY: U.S. International Trade Commission.

ACTION: Notice is hereby given that the U.S. International Trade Commission, at the request of the U.S. Trade Representative, has extended until February 11, 1980, the period for receipt of written comments on its preliminary determinations with respect to identification of chemicals for the new tariff nomenclature for certain benzenoid chemicals.

Notice of the Commission's investigation was published in the Federal Register of June 28, 1979 (44 F.R. 39315), and December 5, 1979 (44 F.R. 70009).

By order of the Commission.

Issued: January 18, 1980.

KENNETH R. MASON,
Secretary.

In the Matter of CERTAIN ANAEROBIC IMPREGNATING COMPOSITIONS AND COMPONENTS THEREFOR	Investigation No. 337-TA-71

Notice of Prehearing Conference and Hearing

Notice is hereby given that a prehearing conference previously scheduled for February 19, 1980, is canceled and rescheduled for February 25, 1980, at 9:30 a.m. in room 610, Bicentennial Building, Washington, D.C.

The hearing previously scheduled for February 25, 1980, is canceled and rescheduled for March 3, 1980, at 9:30 a.m. in room 610, Bicentennial Building, Washington, D.C.

The Secretary shall publish this notice in the Federal Register.

Issued: January 22, 1980.

JANET D. SAXON,
Administrative Law Judge.

Index

U.S. Customs Service

Treasury decisions:

	T.D. No.
Customs-approved public gauger:	
Laboratory Service, Inc	80–45
Capt. W. A. Walls, Inc	80–46
Cotton and manmade fiber textile products—Mexico	80–53
Cotton textile products:	
Pakistan	80–42
Taiwan	80–37
Cotton, wool, and manmade fiber textile products:	
Imported for personal use	80–38
India	80–54
Korea	80–40
Macao	80–39
Malaysia	80–52
Republic of the Philippines	80–55
Philippines	80–51
Romania	80–49
Singapore	80–50
Manmade fiber textile products:	
India	80–36
Thailand	80–35
Wool and manmade fiber textile products—Yugoslavia	80–48
Wool textile products—Malaysia	80–41
Foreign currencies: Daily certified rates; January 14–18, 1979	80–43
Reimbursable services—Excess cost of preclearance operations	80–44
Revocation of approval to act as a public gauger for Customs purposes	80–47

Customs Court

Antidumping Act of 1921; methyl alcohol, exclusion of, C.R.D. 80–1
Antidumping Bond:
- Failure to file, C.R.D. 80–1
- Refusal to file; exclusion of methyl alcohol, C.R.D. 80–1

Construction:
- Antidumping Act of 1921:
  - Sec. 201(a), C.R.D. 80–1
  - Sec. 208, C.R.D. 80–1
- Code of Federal Regulations, title 19:
  - Sec. 153.50, C.R.D. 80–1
  - Sec. 153.51(b), C.R.D. 80–1
- Customs Regulations, sec. 153.50, C.R.D. 80–1

Federal Rules of Civil Procedure, rule 56(b), C.R.D. 80-1
Public Law No. 96-39, 93 Stat. 300 *et seq.*, C.R.D. 80-1
Rules of U.S. Customs Court:
Rule 8.2, C.R.D. 80-1
Rule 8.2(a), C.R.D. 80-1
Rule 8.2(b), as amended (new), C.R.D. 80-1
Tariff Act of 1930:
Sec. 516A (new), C.R.D. 80-1
Sec. 516A(a)(2)(A) (new) C.R.D. 80-1
Trade Agreements Act of 1979, sec. 1001(a), C.R.D. 80-1
U.S. Code:
Title 19:
Sec. 160(a), C.R.D. 80-1
Sec. 167, C.R.D. 80-1
Sec. 1514, C.R.D. 80-1
Sec. 1514(a), C.R.D. 80-1
Sec. 1514(a)(4), C.R.D. 80-1
Title 28:
Sec. 1582, C.R.D. 80-1
Sec. 1582(a), C.R.D. 80-1
Sec. 1582(a)(4), C.R.D. 80-1
Customs Court jurisdiction; legality of exclusion of merchandise, C.R.D. 80-1
Dismissal, motion for, C.R.D. 80-1
Exclusion of methyl alcohol; Antidumping bond, refusal to file, C.R.D. 80-1
Judgment in appealed case (p. —):
Appeal 79-8—Protest filed prior to official notice of liquidation; motion to dismiss for lack of jurisdiction; motion to suspend.
Jurisdiction of Customs Court; review of denial of protest against exclusion of merchandise, C.R.D. 80-1
Legality of exclusion of merchandise; Customs Court jurisdiction, C.R.D. 80-1
Merchandise, exclusion of, C.R.D. 80-1
Methyl alcohol, exclusion of; Antidumping Act of 1921, C.R.D. 80-1
Motion for dismissal; summary judgment, alternative motion for, C.R.D. 80-1
Review of denial of protest against exclusion of merchandise; jurisdiction of Customs Court, C.R.D. 80-1
Summary judgment, alternative motion for; motion for dismissal, C.R.D. 80-1
Valuation decision:
Construction:
Customs Simplification Act of 1956, C.D. 4837
Rules of U.S. Customs Court:
Rule 4.9, C.D. 4837
Rule 8.1, C.D. 4837
Rule 8.1(a), C.D. 4837
Rule 8.2, C.D. 4837
Rule 8.2(d), C.D. 4837
Rule 8.2(e), C.D. 4837
Tariff Act of 1930:
Sec. 402(d), as amended, C.D. 4837
Sec. 402(d)(2), as amended, C.D. 4837
U.S. Code, title 19, sec. 1401a, C.D. 4837
Issues:
Constructed value—manufacturer's negotiated warranty—The question of law entailed whether a manufacturer's negotiated warranty with

respect to certain aircraft made in and exported from Great Britain may be included in the appraised constructed value of the aircraft upon entry into the United States. Where neither the pleadings nor the accompanying stipulation provided nor reflected facts as to the determination of general expenses and profit on the basis of constructed value required in Sec. 402(d), Tariff Act of 1930, as amended by the Customs Simplification Act of 1956, the court denied defendant's motion for rehearing. C.D. 4837

Submission on pleadings—Where the stipulation of facts submitted to the Customs Court in conjunction with the submission on the pleadings were "matters outside the pleadings" within the contemplation of rule 4.9 of the Customs Court, it was held that the court was without discretion but to treat the submission as one for summary judgment. C.D. 4837

Merchandise; aircraft, C.D. 4837

Value; constructed, C.D. 4837

Words and phrases:

General expenses and profit, C.D. 4837

Manufacturer's negotiated warranty, C.D. 4837

U. S. GOVERNMENT PRINTING OFFICE : 1980 O - 308-893

Customs Bulletin
And Decisions

Vol.14 no.8

NOTICE

The abstracts, rulings, and notices which are issued weekly by the U.S. Customs Service are subject to correction for typographical or other printing errors. Users may notify the U.S. Customs Service, Logistics Management Division, Washington, D.C. 20229, of any such errors in order that corrections may be made before the bound volumes are published.

For sale by the Superintendent of Documents, U.S. Government Printing Office, Washington, D.C. 20402. Price: $1.30 (single copy domestic); $1.65 (single copy foreign). Subscription price: $65.00 a year domestic; $81.25 a year foreign.

U.S. Customs Service

Treasury Decisions

T.D. 80-56

Foreign Currencies—Daily Rates for Countries not on Quarterly List

Rates of exchange based on rates certified to the Secretary of the Treasury by the Federal Reserve Bank of New York for the Brazil cruziero, Peoples Republic of China yuan, Hong Kong dollar, Iran rial, Philippines peso, Singapore dollar, Thailand baht (tical) and Venezuela bolivar

The Federal Reserve Bank of New York, pursuant to section 522(c), Tariff Act of 1930, as amended (31 U.S.C. 372(c)), has certified buying rates for the dates and foreign currencies shown below. The rates of exchange, based on these buying rates, are published for the information and use of Customs officers and others concerned pursuant to part 159, subpart C, Customs Regulations (19 CFR 159, subpart C).

Brazil cruziero:	
January 21–25, 1980	$0.0228
Peoples Republic of China yuan:	
January 21–25, 1980	$0.666711
Hong Kong dollar:	
January 21–22, 1980	$0.207943
January 23, 1980	.208247
January 24, 1980	.209644
January 25, 1980	.208768
Iran rial:	
January 21–25, 1980	Not available
Philippines peso:	
January 21–25, 1980	$0.1355
Singapore dollar:	
January 21, 1980	$0.465549
January 22, 1980	.465116
January 23, 1980	.464792
January 24–25, 1980	.465116

Thailand baht (tical):
January 21–25, 1980 ..... $0.048875

Venezuela bolivar:
January 21–25, 1980 ..... $0.2329

(LIQ-3-TRODE)

Dated: January 30, 1980.

HARRISON C. FEESE
(For G. Scott Shreve, Acting
Director, Duty Assessment Division).

(T.D. 80-57)

Drawback Substitution—Flue-Cured and Burley Scrap Tobacco

Imported and domestic flue-cured scrap tobacco held to be of the same kind and quality for purposes of drawback substitution; imported and domestic Burley scrap tobacco held to be of the same kind and quality for purposes of drawback substitution

The official standard grades of the U.S. Department of Agriculture for tobacco are contained in part 29, title 7, Code of Federal Regulations (7 CFR part 29). Flue-cured scrap tobacco is defined in 7 CFR 29.1169, and Burley scrap tobacco is defined in 7 CFR 29.3157. There is only one standard grade for each of these tobacco products, which are used interchangeably by the tobacco industry in the manufacture of blended tobaccos and cigarettes.

This is to give notice that, using the standard grades of the U.S. Department of Agriculture for tobacco, the Customs Service is of the opinion, and has ruled, that imported and domestic flue-cured scrap tobacco are of the same kind and quality and imported and domestic Burley scrap tobacco are of the same kind and quality, for purposes of the drawback substitution law (19 U.S.C. 1313(b)).

Dated: January 30, 1980.

HARVEY B. FOX,
Acting Director,
Office of Regulations and Rulings.

(T.D. 80-58)

Cotton, Wool, and Manmade Fiber Textile Products—Restriction on Entry

Restriction on entry of cotton, wool, and manmade fiber textile products manufactured or produced in India

There is published below a directive of December 21, 1979, received by the Commissioner of Customs from the acting chairman, Committee for the Implementation of Textile Agreements, concerning restriction on entry of cotton, wool, and manmade fiber textile products in various categories manufactured or produced in India.

This directive was published in the Federal Register on December 28, 1979 (44 F.R. 76840), by the committee.

(QUO-2-1)

Dated: February 1, 1980.

WILLIAM D. SLYNE
(For G. Scott Shreve, Acting
Director, Duty Assessment Division).

U.S. DEPARTMENT OF COMMERCE,
THE ASSISTANT SECRETARY FOR INDUSTRY AND TRADE,
Washington, D.C., December 21, 1979.

Committee for the Implementation of Textile Agreements

COMMISSIONER OF CUSTOMS,
Department of the Treasury,
Washington, D.C.

DEAR MR. COMMISSIONER: Under the terms of the Arrangement Regarding International Trade in Textiles done at Geneva on December 20, 1973, as extended on December 15, 1977; pursuant to the Bilateral Cotton, Wool and Man-Made Fiber Textile Agreement of December 30, 1977, as amended, between the Governments of the United States and India; and in accordance with the provisions of Executive Order 11651 of March 3, 1972, as amended by Executive Order 11951 of January 6, 1977, you are directed to prohibit, effective on January 1, 1980 and for the 12-month period extending through December 31, 1980, entry into the United States for consumption and withdrawal from warehouse for consumption of cotton, wool, and manmade fiber textile products in the following categories, produced or manufactured in India, in excess of the indicated 12-month levels of restraint:

Category	*12-month level of restraint*	
330–369, 431–469 and 630–669	40, 532, 895	square yards equivalent
335	16, 949	dozen
342	39, 326	dozen
359	152, 174	pounds

Category	*12-month level of Restraint*	
363	20, 000, 000	numbers
369	2, 608, 696	pounds
410	100, 000	square yards
447	5, 556	dozen
636	15, 453	dozen
640	29, 167	dozen
641	48, 276	dozen
666	256, 410	pounds

Floor coverings in categories 369 (only TSUSA Nos. 360.7600 and 361.5420), 465 (only TSUSA Nos. 360.0500, 360.1000, 360.1500, 361.4200, and 361.4400) and 665 (only TSUSA No. 360.7800) shall not be subject to this directive.

Apparel products in categories 330–359, 431–459, and 630–659 which are certified by the elephant certification shall be permitted entry up to a level of 3 million dozen for the 12-month period beginning on January 1, 1980, and extending through December 31, 1980, and shall not be charged to the foregoing levels.

You are further directed to prohibit, effective on January 1, 1980, and for the 12-month period extending through December 31, 1980, entry into the United States for consumption and withdrawal from warehouse for consumption of cotton textile products in categories 336, 338/339/340, 341, and 347/348, produced or manufactured in India, in excess of the following levels of restraint:

Category	*12-month level of restraint*	
336	192,560	dozen
338/339/340	975,340	dozen
341	2,134,655	dozen
347/348	117,028	dozen

Cotton textile products in categories 336, 338/339/340, 341, and 347/348 are also chargeable to the level of restraint established for categories 330–369, 431–469, and 630–669, as a group, unless accompanied by an elephant certification in which case they shall be chargeable to the level of 3 million dozen established for apparel products in categories 330–359, 431–459, and 630–669.

In carrying out this directive, cotton, wool, and manmade fiber textile products in categories 330–369, 431–469, and 630–669, as a group, and individual categories 335, 338/339/340, 341, 342, 347/348, 359, 447, 641, and 666, including products accompanied by the elephant certification, produced or manufactured in India and exported

to the United States prior to January 1, 1980, shall, to the extent of any unfilled balances, be charged against the levels of restraint established for such goods during the 12-month period beginning on January 1, 1979, and extending through December 31, 1979. In the event that the levels of restraint established for that period have been exhausted by previous entries, such goods shall be subject to the levels set forth in this directive.

Cotton, wool, and manmade fiber textile products in categories 363, 369, 410, 636, and 640, exported prior to January 1, 1980, shall not be subject to this directive.

Cotton, wool, and manmade fiber textile products in categories 363, 369, 410, 636, and 640 which have been released from the custody of the U.S. Customs Service under the provisions of 19 U.S.C. 1448(b) or 1484(a)(1)(A) prior to the effective date of this directive shall not be denied entry under this directive.

The levels of restraint set forth above are subject to adjustment in the future, as applicable, according to the provisions of the bilateral agreement of December 30, 1977, as amended, between the Governments of the United States and India which provide, in part, that: (1) Within the aggregate, group limits may be exceeded by designated percentages; (2) specific limits may be exceeded by various percentages subject to various provisions of the agreement; (3) consultation levels may be increased upon agreement between the two governments; and (4) administrative arrangements or adjustments may be made to resolve minor problems arising in the implementation of the agreement. Any appropriate adjustments under the provisions of the bilateral agreement referred to above will be made to you by letter.

A detailed description of the textile categories in terms of TSUSA numbers was published in the Federal Register on January 4, 1978 (43 F.R. 884), as amended on January 25, 1978 (43 F.R. 3421), March 3, 1978 (43 F.R. 8828), June 22, 1978 (43 F.R. 26773), September 5, 1978 (43 F.R. 39408), January 2, 1979 (44 F.R. 94), March 22, 1979 (44 F.R. 17545), and April 12, 1979 (44 F.R. 21843).

In carrying out the above directions, entry into the United States for consumption shall be construed to include entry for consumption into the Commonwealth of Puerto Rico.

The actions taken with respect to the Government of India and with respect to imports of cotton, wool, and manmade fiber textile products from India have been determined by the Committee for the Implementation of Textile Agreements to involve foreign affairs functions of the United States. Therefore, the directions to the Commissioner of Customs, which are necessary for the implementation of such actions, fall within the foreign affairs exception to the rule-

making provisions of 5 U.S.C. 553. This letter will be published in the Federal Register.

Sincerely,

PAUL T. O'DAY,
Acting Chairman, Committee for the Implementation of Textile Agreements.

(T.D. 80-59)

Cotton and Manmade Fiber Textile Products—Restriction on Entry

Restriction on entry of cotton and manmade fiber textile products manufactured or produced in Thailand

There is published below a directive of December 20, 1979, received by the Commissioner of Customs from the acting chairman, Committee for the Implementation of Textile Agreements, concerning restriction on entry of cotton and manmade fiber textile products in various categories manufactured or produced in Thailand.

This directive was published in the Federal Register on December 27, 1979 (44 F.R. 76574), by the committee.

(QUO-2-1)

Dated: February 1, 1980.

WILLIAM D. SLYNE
(For G. Scott Shreve, Acting Director, Duty Assessment Division).

U.S. DEPARTMENT OF COMMERCE,
THE ASSISTANT SECRETARY FOR INDUSTRY AND TRADE,
Washington, D.C., December 20, 1979.

Committee for the Implementation of Textile Agreements

COMMISSIONER OF CUSTOMS,
Department of the Treasury,
Washington, D.C.

DEAR MR. COMMISSIONER: Under the terms of the Arrangement Regarding International Trade in Textiles done in Geneva on December 20, 1973, as extended on December 15, 1977; pursuant to the Bilateral Cotton, Wool and Man-Made Fiber Textile Agreement of October 4, 1978, as amended, between the Governments of the United States and Thailand; and in accordance with the provisions of Executive Order 11651 of March 3, 1972, as amended by Executive Order

11951 of January 6, 1977, you are directed to prohibit, effective on January 1, 1980 and for the 12-month period extending through December 31, 1980, entry into the United States for consumption and withdrawal from warehouse for consumption of cotton and man-made fiber textile products, exported from Thailand, in excess of the indicated 12-month levels of restraint:

Category	*12-month level of restraint*	
319	5,000,000	square yards
320	8,000,000	square yards
331	359,286	
334/335	47,126	dozen
336	20,075	
338/339	510,434	dozen
340	90,025	dozen
341	95,046	dozen
347/348	160,801	dozen
639	1,121,240	dozen
641	142,126	dozen
645/646	64,792	dozen

In carrying out this directive entries of cotton and manmade fiber textile products in the foregoing categories, except categories 319, 334/335, and 347/348, produced or manufactured in Thailand which have been exported to the United States prior to January 1,1980, shall, to the extent of any unfilled balances, be charged against the levels of restraint established for such goods during the 12-month period beginning on January 1, 1979, and extending through December 31, 1979. In the event the levels of restraint established for that period have been exhausted by previous entries, such goods shall be subject to the levels set forth in this letter. Textile products in categories 319, 334/335, and 347/348 that have been exported to the United States before January 1, 1980, shall not be subject to this directive.

The levels of restraint set forth above are subject to adjustment according to the provisions of the bilateral agreement of October 4, 1978, as amended, between the Governments of the United States and Thailand which provide, in part, that: (1) Specific levels of restraint may be increased for carryover and carryforward up to 11 percent of the applicable category limit; and (2) administrative arrangements or adjustments may be made to resolve minor problems arising in the implementation of the agreement. Any appropriate adjustments under the provisions of the bilateral agreement, referred to above, will be made to you by letter.

A detailed description of the textile categories in terms of TSUSA

308-884 O - 80 - 2

numbers was published in the Federal Register on January 4, 1978 (43 F.R. 884), as amended on January 25, 1978 (43 F.R. 3421), March 3, 1978 (43 (F.R. 8828), June 22, 1978 43 F.R. 26773), September 5, 1978 (43 F.R. 39408), January 2, 1979 (44 F.R. 94), March 22, 1979 (44 F.R. 17545), and April 12, 1979 (44 F.R. 21843).

In carrying out the above directions, entry into the United States for consumption shall be construed to include entry for consumption into the Commonwealth of Puerto Rico.

The actions taken with respect to the Government of Thailand and with respect to imports of cotton and manmade fiber textile products from Thailand have been determined by the Committee for the Implementation of Textile Agreements to involve foreign affairs functions of the United States. Therefore, the directions to the Commissioner of Customs, which are necessary for the implementation of such actions, fall within the foreign affairs exception to the rulemaking provisions of 5 U.S.C. 553. This letter will be published in the Federal Register.

Sincerely,

PAUL T. O'DAY,
Acting Chairman, Committee for the Implementation of Textile Agreements.

(T.D. 80-60)

Cotton Textiles and Cotton Textile Products—Restriction on Entry

Restriction on entry of cotton textiles and cotton textile products manufactured or produced in Pakistan

There is published below a directive of December 20, 1979, received by the Commissioner of Customs from the acting chairman, Committee for the Implementation of Textile Agreements, concerning restriction on entry of cotton textiles and cotton textile products in various categories manufactured or produced in Pakistan.

This directive was published in the Federal Register on December 27, 1979 (44 F.R. 76572), by the committee.

(QUO-2-1)

Dated: February 1, 1980.

WILLIAM D. SLYNE
(For G. Scott Shreve, Acting Director, Duty Assessment Division).

U.S. DEPARTMENT OF COMMERCE,
INDUSTRY AND TRADE ADMINISTRATION,
Washington, D.C., December 20, 1979.

Committee for the Implementation of Textile Agreements

COMMISSIONER OF CUSTOMS,
Department of the Treasury,
Washington, D.C.

DEAR MR. COMMISSIONER: Under the terms of the Arrangement Regarding International Trade in Textiles done at Geneva on December 20, 1973, as extended on December 15, 1977; pursuant to the Bilateral Cotton Textile Agreement of January 4 and 9, 1978, as amended, between the Governments of the United States and Pakistan; and in accordance with the provisions of Executive Order 11651 of March 3, 1972, as amended by Executive Order 11951 of January 6, 1977, you are directed to prohibit, effective on January 1, 1980, and for the 12-month period extending through December 31, 1980, entry into the United States for consumption, and withdrawal from warehouse for consumption of cotton textile products in the following categories, produced or manufactured in Pakistan, in excess of the indicated 12-month levels of restraint:

Category	*12-month level of restraint*	
313	61,384,113	square yards
315	35,845,000	square yards
320	1,000,000	square yards
331	200,000	dozen pairs
336	15,453	dozen
340	29,167	dozen
341	147,586	dozen
348	39,326	dozen
351	13,462	dozen
359	266,739	pounds
363	16,081,030	numbers
369 [1]	5,217,391	pounds

In carrying out this directive, entries of cotton textile products in the foregoing categories, except categories 331, 336, 340, and 348, produced or manufactured in Pakistan, which have been exported to the United States prior to January 1, 1980, shall to the extent of any unfilled balances, be charged against the levels of restraint established for such goods during the 12-month period beginning on January 1,

[1] In category 369, all TSUSA numbers except 366.1855.

1979, and extending through December 31, 1979. In the event the levels of restraint established for that period have been exhausted by previous entries, such goods shall be subject to the levels set forth in this letter. Cotton textile products in categories 331, 336, 340, 348, and 351 which have been exported prior to January 1, 1980, shall not be subject to this directive.

Cotton textile products in categories 331, 336, 340, and 348 which have been released from the custody of the U.S. Customs Service under the provisions of 19 U.S.C. 1448(b) or 1484(a)(1)(A) prior to the effective date of this directive shall not be denied entry under this directive.

The levels set forth above are subject to adjustment in the future according to the provisions of the bilateral agreement of January 4 and 9, 1978, as amended, between the Governments of the United States and Pakistan which provide, in part, that: (1) Within the aggregate and group limits, specific levels of restraint may be exceeded by designated percentages; (2) specific levels may be increased for carryover and carryforward; and (3) administrative arrangements or adjustments may be made to resolve minor problems arising in the implementation of the agreement. Any appropriate adjustments under the provisions of the bilateral agreement, referred to above, will be made to you by letter.

A detailed description of the textile categories in terms of TSUSA numbers was published in the Federal Register on January 4, 1978 (43 F.R. 884), as amended on January 25, 1978 (43 F.R. 3421), March 3, 1978 (43 F.R. 8828), June 22, 1978 (43 F.R. 26773), September 5, 1978 (43 F.R. 39408), January 2, 1979 (44 F.R. 94), March 22, 1979 (44 F.R. 17545), and April 12, 1979 (44 F.R. 21843).

In carrying out the above directions, entry into the United States for consumption shall be construed to include entry for consumption into the Commonwealth of Puerto Rico.

The actions taken with respect to the Government of Pakistan and with respect to imports of cotton textile products from Pakistan have been determined by the Committee for the Implementation of Textile Agreements to involve foreign affairs functions of the United States.

Therefore, the directions to the Commissioner of Customs, which are necessary for the implementation of such actions, fall within the foreign affairs exception to the rulemaking provisions of 5 U.S.C. 553. This letter will be published in the Federal Register.

Sincerely,

PAUL T. O'DAY,
Acting Chairman, Committee for the Implementation of Textile Agreements.

(T.D. 80-61)

Cotton, Wool, and Manmade Fiber Textile Products—Restriction on Entry

Restriction on entry of cotton, wool, and manmade fiber textile products manufactured or produced in Poland

There is published below a directive of December 20, 1979, received by the Commissioner of Customs from the acting chairman, Committee for the Implementation of Textile Agreements, concerning restriction on entry of cotton, wool, and manmade fiber textile products in various categories manufactured or produced in Poland.

This directive was published in the Federal Register on December 27, 1979 (44 F.R. 76571), by the committee.

(QUO-2-1)

Dated: February 1, 1980.

WILLIAM D. SLYNE
(For G. Scott Shreve, Acting
Director, Duty Assessment Division).

U.S. DEPARTMENT OF COMMERCE,
INDUSTRY AND TRADE ADMINISTRATION,
Washington, D.C., December 20, 1979.

Committee for the Implementation of Textile Agreements

COMMISSIONER OF CUSTOMS,
Department of the Treasury,
Washington, D.C.

DEAR MR. COMMISSIONER: Under the terms of the Arrangement Regarding International Trade in Textiles done at Geneva on December 20, 1973, as extended on December 15, 1977; pursuant to the Bilateral Cotton, Wool and Man-Made Fiber Textile Agreement of January 9 and 12, 1978, as amended, between the Governments of the United States and the Polish People's Republic; and in accordance with the provisions of Executive Order 11651 of March 3, 1972, as amended by Executive Order 11951 of January 6, 1977, you are directed to prohibit, effective on January 1, 1980, and for the 12-month period beginning on January 1, 1980, and extending through December 31, 1980, entry into the United States for consumption and withdrawal from warehouse for consumption of cotton, wool, and

manmade fiber textile products in the following categories, produced or manufactured in Poland, in excess of the indicated levels of restraint:

Category	*12-month level of restraint*	
333	68, 285	dozen
335	33, 735	dozen
338	504, 531	dozen of which not more than 202,872 dozen shall be in TSUSA No. 380.0652
339	215, 357	dozen
347	60, 000	dozen
359	330, 000	pounds
369	217, 391	pounds
410	1, 814, 760	square yards
433	7, 084	dozen
443/643/644	12, 114	dozen
612	1, 000, 000	square yards
634	114, 264	dozen
635	59, 853	dozen of which not more than 27,206 dozen shall be TSUSA Nos. 382.0462, 382.0464, 382.4268, 382.8145, 382.8154, 382.8159, 382.8160, 382.8163, 382.8165, and 791.7473
645/646	76, 852	dozen
647	113, 622	dozen of which not more than 44,187 dozen shall be in TSUSA Nos. 380.0468, 380.0469, 380.5184, 380.8449 380.8456, 380.8457, and 791.7480

In carrying out this directive, entries of cotton, wool, and manmade fiber textile products in the foregoing categories, except category 369, produced or manufactured in Poland, which have been exported to the United States prior to January 1, 1980, shall, to the extent of any unfilled balances, be charged against the levels of restraint established for such goods during the 12-month period beginning on January 1, 1979, and extending through December 31, 1979. In the event the levels of restraint established for that period have been exhausted by previous entries, such goods shall be subject to the levels set forth in this letter.

Cotton textile products in category 369 which have been exported before January 1, 1980, shall not be subject to this directive.

Cotton textile products in category 369 which have been released from the custody of the U.S. Customs Service under the provisions of 19 U.S.C. 1448(b) or 1484(a)(1)(A) prior to the effective date of this directive shall not be denied entry under this directive.

The levels of restraint set forth above are subject to adjustment in the future according to the provisions of the bilateral agreement of January 9 and 12, as amended, between the Governments of the United States and the Polish People's Republic, which provide, in part, that: (1) Within the aggregate and applicable group limits of the agreement, specific levels of restraint may be exceeded by designated percentages; (2) these levels may also be increased for carryover and carryforward; and (3) administrative arrangements or adjustments may be made to resolve minor problems arising in the implementation of the agreement. Any appropriate adjustments under the provisions of the bilateral agreement will be made to you by letter.

A detailed description of the textile categories in terms of TSUSA numbers was published in the Federal Register on January 4, 1978 (43 F.R. 884), as amended on January 25, 1978 (43 F.R. 3421), March 3, 1978 (43 F.R. 8828), June 22, 1978 (43 F.R. 26773), September 5, 1978 (43 F.R. 39408), January 2, 1979 (44 F.R. 94), March 22, 1979 (44 F.R. 17545), and April 12, 1979 (44 F.R. 21843).

In carrying out the above directions, entry into the United States for consumption shall be construed to include entry for consumption into the Commonwealth of Puerto Rico.

The actions taken with respect to the Government of the Polish People's Republic and with respect to imports of cotton, wool, and manmade fiber textile products from Poland have been determined by the Committee for the Implementation of Textile Agreements to involve foreign affairs functions of the United States. Therefore, the directions to the Commissioner of Customs, which are necessary for the implementation of such actions, fall within the foreign affairs exception to the rulemaking provisions of 5 U.S.C. 553. This letter will be published in the Federal Register.

Sincerely,

PAUL T. O'DAY,
Acting Chairman, Committee for the Implementation of Textile Agreements.

(T.D. 80-62)

Synopses of Drawback Decisions

The following are synopses of drawback rates issued September 20,

1979, to January 17, 1980, inclusive, pursuant to section 22.1 and 22.5, inclusive, Customs Regulations.

In the synopses below are listed, for each drawback rate approved under section 1313(b), the name of the company, the specified articles on which drawback is authorized, the merchandise which will be used to manufacture or produce these articles, the factories where the work will be accomplished, the date the statement was signed, the basis for determining payment, the Regional Commissioner to whom the rates was forwarded to or issued by, and the date on which it was forwarded or issued.

(DRA-1-09)
Dated: February 1, 1980.

DONALD W. LEWIS,
Director, Office of Regulations and Rulings.

(A) Company: Airco, Inc., Airco Speer Carbon Graphite Division.
Articles: Graphite electrodes.
Merchandise: Calcined needle petroleum coke.
Factories: Saint Mary's Pa.; Niagara Falls, N.Y.
Statement signed: June 7, 1979.
Basis of claim: Appearing in.
Rate forwarded to Regional Commissioner of Customs: Baltimore, November 1, 1979.

(B) Company: Arrow Fastener Co., Inc.
Articles: Staples.
Merchandise: Wire.
Factory: Saddle Brook, N.J.
Statement signed: May 1, 1979.
Basis of claim: Used in.
Rate forwarded to Regional Commissioner of Customs: New York, November 8, 1979.

(C) Company: Basic Vegetable Products, Inc.
Articles: Dehydrated garlic products.
Merchandise: Dehydrated garlic and raw garlic.
Factories: Vacaville and King City, Calif.
Statement signed: September 26, 1979.
Basis of claim: Used in
Rate issued by Regional Commissioner of Customs in accordance with section 22.4(o)(2): San Francisco, December 11, 1979.
Revokes: T.D. 70-142-E.

(D) Company: Burton Auto Spring Corp.
Articles: Automotive, truck, industrial, and agricultural leaf springs, semi-elliptic, and parts thereof.
Merchandise: Hot rolled alloy steel bar.
Factory: Chicago, Ill.
Statement signed: August 6, 1979.
Basis of claim: Appearing in.
Rate forwarded to Regional Commissioner of Customs: New York, January 16, 1980.

(E) Company: Caribe Metal Decorating Corp.
Articles: Lithographed tin plate; electrolytic chromium coated black plate.
Merchandise: Single reduced tin plate; steel, cold-rolled, single reduced tin mill black plate, electrolytic, chromium coated.
Factory: Hato Rey, P.R.
Statement signed: October 19, 1979.
Basis of claim: Appearing in.
Rate forwarded to Regional Commissioner of Customs: Miami, November 8, 1979.

(F) Company: Chevron Chemical Co.
Articles: Lubricating oil additives.
Merchandise: Polyisobutylene.
Factory: Belle Chasse, La.
Statement signed: June 19, 1979.
Basis of claim: Used in.
Rate forwarded to Regional Commissioner of Customs: San Francisco, October 19, 1979.

(G) Company: Data General Corp.
Articles: Computer systems, subsystems, equipment.
Merchandise: Printed circuit board products.
Factories: Southboro, Mass.; Westbrook, Maine; Cary, N.C.; Portsmouth, N.H.; Austin, Tex.
Statement signed: August 31, 1979.
Basis of claim: Appearing in.
Rate forwarded to Regional Commissioner of Customs: San Francisco, January 8, 1980.

(H) Company: Del Monte Corp.
Articles: Canned corn and canned peas.
Merchandise: Liquid and hard refined sugar.
Factories: Rochelle (2) and De Kalb, Ill.; Mendota and Arlington,

308-894 0 - 80 - 3

Wis.; Sleepy Eye and Wells, Minn.; Toppenish, Wash.; Burley, Idaho; and Smithfield, Utah.
Statement signed: October 24, 1979.
Basis of claim: Used in.
Rate forwarded to Regional Commissioner of Customs: San Francisco, November 8, 1979.
Revokes: Unpublished authorization letter dated September 12, 1979.

(I) Company: E. I. du Pont de Nemours and Co.
Articles: Chemical pigment colors.
Merchandise: Pig lead.
Factory: Newark, N.J.
Statement signed: July 6, 1979.
Basis of claim: Appearing in
Rate forwarded to Regional Commissioner of Customs: Baltimore, November 26, 1979.

(J) Company: Eastman Kodak Co.
Articles: Photographic chemicals (couplers C-16 and 114-BR).
Merchandise: 1-hydroxy-2-naphthoic acid.
Factory: Kingsport, Tenn.
Statement signed: September 7, 1979.
Basis of claim: Used in.
Rate forwarded to Regional Commissioner of Customs: Baltimore, October 15, 1979.

(K) Company: Eli Lilly and Co.
Articles: Cephalexin monohydrate in bulk form and in finished antibiotic products.
Merchandise, Cephalexin disolvate.
Factories: Lafayette, Clinton, and Indianapolis, Ind.; San Juan, P.R.
Statement signed: September 14, 1979.
Basis of claim: Appearing in.
Rate forwarded to Regional Commissioner of Customs: Chicago, December 10, 1979.

(L) Company: Eli Lilly and Co.
Articles: QA 106N acetohexamide tablets.
Merchandise: p-acetylbenzene sulfonamide.
Factory: Lafayette, Ind.
Statement signed: July 3, 1979.
Basis of claim: Used in.
Rate forwarded to Regional Commissioner of Customs: Chicago, November 7, 1979.

(M) Company: Fresh Pak Foods, Inc.
Articles: Various orange juice products and orange juice drinks and beverages.
Merchandise: Concentrated orange juice for manufacturing, pasteurized orange juice, orange juice and orange juice for manufacturing.
Factories: Yoakum, Tex.; Lakeland, Fla.
Statement signed: October 15, 1979.
Basis of claim: Used in.
Rate forwarded to Regional Commissioners of Customs: Houston, Los Angeles, and Miami, December 7, 1979.

(N) Company: Gum Products, Inc.
Articles: Candy coated and colored gum balls and candy coated peanuts.
Merchandise: Hard and liquid refined sugar.
Factory: East Boston, Mass.
Statement signed: July 17, 1979.
Basis of claim: Used in.
Rate forwarded to Regional Commissioners of Customs: New York, October 15, 1979.
Revokes: T.D. 53910–K.

(O) Company: A. H. Helmig & Co., Inc.
Articles: Sorted shorn wool; sorted pulled wool; scoured shorn wool; scoured pulled wool; carbonized shorn wool; carbonized pulled wool; combed wool top.
Merchandise: Greasy shorn wool; scoured wool; greasy slipes (as defined in T.D. 72–204), based on clean content.
Factories: Various factories as set forth in manufacturer's statement.
Statement signed: September 18, 1979.
Basis of claim: Used in, with distribution to the products obtained in accordance with their relative value at the time of separation.
Rate forwarded to Regional Commissioners of Customs: Boston, November 27, 1979.
Revokes: T.D. 72–199–I.

(P) Company: Henkel Corp.
Articles: Food products and food supplements.
Merchandise: Wheat germ oil.
Factories: Kankakee, Ill.; Minneapolis, Minn.; Keokuk, Iowa.
Statement signed: June 28, 1979.
Basis of claim: Appearing in.
Rate issued by Regional Commissioner of Customs in accordance with section 22.4(o)(2): Chicago, November 23, 1979.

Revokes: T.D. 75-164-J, to cover successorship from General Mills Chemicals, Inc.

(Q) Company: Interpace Corp., Lapp Division.
Articles: High voltage insulator.
Merchandise: Malleable iron castings.
Factories: Le Roy, N.Y.; Sandersville, Ga.
Statement signed: June 6, 1979.
Basis of claim: Appearing in.
Rate forwarded to Regional Commissioner of Customs: Boston, October 12, 1979.

(R) Company: Kulite Tungsten Corp.
Articles: Tungsten alloy powder and tungsten alloy parts and tungsten parts and fabrication.
Merchandise: Tungsten powder and tungsten carbide powder.
Factory: Ridgefield, N.J.
Statement signed: April 26, 1979.
Basis of claim: Appearing in.
Rate forwarded to Regional Commissioner of Customs: New York, October 24, 1979.

(S) Comapny: Marcrest Pacific Co., Inc.
Articles: Steel from coil which has been leveled and cut or slit; steel beams.
Merchandise: Steel coil, hot rolled.
Factory: Carson, Calif.
Statement signed: June 29, 1979.
Basis of claim: Appearing in.
Rate forwarded to Regional Commissioner of Customs: Los Angeles, January 17, 1980.

(T) Company: Monsanto Co.
Articles: Avadex BW granular herbicide.
Merchandise: TDTC (Avadex BW technical).
Factory: Muscatine, Iowa.
Statement signed: June 19, 1979.
Basis of claim: Appearing in.
Rate forwarded to Regional Commissioners of Customs: Chicago and New York, October 22, 1979.

(U) Company: Paramount Citrus Association, Inc.
Articles: Canned, bottled, or packaged fruit juices and fruit juice concentrates.
Merchandise: Hard and/or liquid refined sugar; concentrated orange juice (21 CFR 146.153) grade A.

Factory: San Fernando, Calif.
Statement signed: July 30, 1979.
Basis of claim: Appearing in.
Rate forwarded to Regional Commissioner of Customs: Los Angeles, September 20, 1979.
Revokes: T.D. 54219–B.

(V) Company: Platt Brothers & Co.
Articles: Zinc strip in coils; zinc wire, in coils and drums; and zinc rod, in coils and drums.
Merchandise: Special high grade zinc slab.
Factory: Waterbury, Conn.
Statement signed: October 3, 1979.
Basis of claim: Appearing in.
Rate forwarded to Regional Commissioner of Customs: Boston, October 17, 1979.
Revokes: T.D. 78–233–U.

(W) Company: Reactive Metals and Alloys Corp.
Articles: Ingots, balls, and canisters of Mischaloy 96 mischmetal.
Merchandise: Ingots, slugs, donuts, and balls of mischmetal.
Factories: West Pittsburg, Pa.
Statement signed: November 20, 1979.
Basis of claim: Used in.
Rate forwarded to Regional Commissioner of Customs: Baltimore, January 17, 1980.

(X) Company: Rich Ice Cream Co.
Articles: Eclairs.
Merchandise: Pulverized hard refined sugar; hard refined sugar; liquid refined sugar; and liquid refined invert sugar.
Factory: West Palm Beach, Fla.
Statement signed: June 19, 1979.
Basis of claim: Used in.
Rate forwarded to Regional Commissioner of Customs: New York, October 19, 1979.

(Y) Company: Rich Products Corp.
Articles: Cheesecake, puddings, prewhipped toppings and eclairs.
Merchandise: Pulverized hard refined sugar; hard refined sugar; liquid refined sugar; and liquid refined invert sugar.
Factory: Buffalo, N.Y.
Statement signed: September 24, 1979.
Basis of claim: Used in.

Rate forwarded to Regional Commissioner of Customs: New York, October 19, 1979.
Revokes: Unpublished authorization letter dated August 9, 1979.

(Z) Company: Williams, White and Co.
Articles: Hydraulic and mechanical machinery.
Merchandise: Hot rolled steel plate.
Factory: Moline, Ill.
Statement signed: August 17, 1979.
Basis of claim: Appearing in.
Rate forwarded to Regional Commissioner of Customs: New York, November 16, 1979.

(T.D. 80-63)

Customs Delegation Order No. 1 (Revision 1) Amended

Performance of functions in the U.S. Customs Service

By virtue of the authority vested in me by Treasury Department Order No. 165 revised (T.D. 53654, 19 F.R. 7241), as amended, the Director, Office of Regulations and Rulings, hereby is delegated the right to redelegate to appropriate Division Directors and Branch Chiefs in the Office of Regulations and Rulings at Customs Headquarters the authority delegated to him by paragraph A of Customs Delegation Order No. 1 (revision 1), as amended by T.D. 79-225 (44 F.R. 48022).

Accordingly, paragraph A of Customs Delegation Order No. 1 (revision 1), as amended by T.D. 79-225, is further amended in the following manner:

1. The following sentence is inserted at the end of the paragraph immediately following the heading "A. Director, Office of Regulations and Rulings.":

> The Director, Office of Regulations and Rulings, is authorized to redelegate the authority delegated to him by this Order to appropriate Division Directors and Branch Chiefs in the Office of Regulations and Rulings at Customs Headquarters.

* * * * * * *

2. Subparagraph (b)(2) is amended to read as follows:

(b) Director, Entry Procedures and Penalties Division.

* * * * * * *

(2) Decisions with respect to offers in compromise under

19 U.S.C. 1617, as amended, if recommended by the General Counsel of the Treasury Department.

This delegation of authority is effective February 4, 1980.

Dated: February 4, 1980.

WILLIAM T. ARCHEY,
Acting Commissioner of Customs.

[Published in the Federal Register, Feb. 8, 1980 (45 F.R. 8787)]

(T.D. 80-64)

Customs Delegation Order No. 56

Delegation of authority with respect to initial decisions under 5 U.S.C. 552 and 5 U.S.C. 552a

Paragraph A(b)(3) of Customs Delegation Order No. 1 (revision 1), amended (T.D. 69-26, 34 F.R. 8208), delegates to the Director, Entry Procedures and Penalties Division, the authority to make decisions denying or approving requests for information under 5 U.S.C. 552 and requests for amendment of records under 5 U.S.C. 552a. To reflect a reassignment of functions and staff at Customs Service Headquarters, paragraph A(b)(3) of Customs Delegation Order No. 1 (revision 1), amended, is hereby rescinded, paragraph A(b)(4) of that order is redesignated paragraph A(b)(3), and the following delegation is made:

By virtue of the authority vested in me by Treasury Department Order No. 165, revised (T.D. 53654, 19 F.R. 7241), as amended, the authority to approve or deny initial requests with respect to records in their custody under 5 U.S.C. 552 and 5 U.S.C. 552a is hereby delegated to the various division directors at Customs Service Headquarters, unless the request relates to records which are in the custody of an office which is not within a division. In that event, the authority to approve or deny the initial request is hereby delegated to the individual designated for that purpose by the Assistant Commissioner or Comptroller, as appropriate, having responsibility for the custodian office.

The delegation of authority is effective (10 days from the date of publication of this notice in the Federal Register).

Dated: February 4, 1980.

WILLIAM T. ARCHEY,
Acting Commissioner of Customs.

[Published in the Federal Register, Feb. 8, 1980 (45 F.R. 8787)]

(T.D. 80-65)

Cotton, Wool, and Manmade Fiber Textile Products—Restriction on Entry

Restriction on entry of cotton, wool, and manmade fiber textile products manufactured or produced in Korea

There is published below a directive of December 20, 1979, received by the Commissioner of Customs from the acting chairman, Committee for the Implementation of Textile Agreements, concerning restriction on entry of cotton, wool, and manmade fiber textile products in various categories manufactured or produced in Korea.

This directive was published in the Federal Register on December 27, 1979 (44 F.R. 76573), by the committee.

(QUO-2-1)

Dated: February 4, 1980.

WILLIAM D. SLYNE
(For G. Scott Shreve, Acting
Director, Duty Assessment Division).

U.S. DEPARTMENT OF COMMERCE,
THE ASSISTANT SECRETARY FOR INDUSTRY AND TRADE,
Washington, D.C., December 20, 1979.

Committee for the Implementation of Textile Agreements

COMMISSIONER OF CUSTOMS,
Department of the Treasury,
Washington, D.C.

DEAR MR. COMMISSIONER: Under the terms of the Arrangement Regarding International Trade in Textiles done at Geneva on December 20, 1973, as extended on December 15, 1977; pursuant to the Bilateral Cotton, Wool and Man-Made Fiber Textile Agreement of December 23, 1978, as amended, between the Governments of the United States and Republic of Korea; and in accordance with the provisions of Executive Order 11651 of March 3, 1972, as amended by Executive Order 11951 of January 6, 1977, you are directed to prohibit, effective on January 1, 1980, and for the 12-month period extending through December 31, 1980, entry into the United States for consumption and withdrawal from warehouse for consumption of cotton, wool, and manmade fiber textile products in the following categories, produced or manufactured in Korea, in excess of the indicated levels of restraint:

Category	*12-month level of restraint*	
314	8,500,000	square yards
320	19,000,000	square yards
331	330,000	dozen pairs
333/334/335	86,831	dozen of which not more than 49,407 dozen shall be in category 333/334 and not more than 50,449 dozen shall be category 335
340	153,264	dozen
341	95,486	dozen
347/348	228,477	dozen of which not more than 161,338 dozen shall be in category 347 and not more than 124,259 dozen shall be in category 348
350	19,608	dozen
410	2,850,000	square yards
433/434	16,526	dozen of which not more than 12,016 dozen be in category 433 and not more than 6,163 dozen shall be in category 434
435	2,037	dozen
440	204,019	dozen
444	3,868	dozen
447	79,790	dozen
448	7 611	dozen
459 pt.[1]	2,850,000	pounds
604	243,902	pounds
605	3,428,571	pounds of which not more than 1,428,171 pounds shall be in TSUSA 316.6020
612	21,000,000	square yards of which not more than 4 million square yards shall be in TSUSA 338.3037 and 338.3038
614	3,000,000	square yards
631	516,086	dozen of pairs
633/634/635	1,297,131	dozen of which not more than 163,849 dozen shall be in category 633; not more than 754,783 dozen shall be in

[1] The category 459, only TSUSA Nos. 700.7510 through 700.7560.

Category	*12-month level of restraint*
	category 634; and not more than 573,069 dozen shall be in category 635
638/639	5,166,155 dozen
640 pt.[2]	4,158,588 dozen
640 pt.[3]	1,538,721 dozen
641	957,434 dozen
643	56,692 dozen
645/646	3,009,062 dozen
669	2,243,590 pounds of which not more than 1,538,462 pounds shall be in TSUSA 389.6210 and not more than 320,513 pounds shall be in TSUSA 355.4560

[2] In category 640, only TSUSA Nos. 380.0455, 380.8431 and 380.8433.
[3] In category 640, all TSUSA numbers except those listed in footenote 2.

In carrying out this directive entries of textile products in the foregoing categories, except categories 435, 604, and 612, which have been exported to the United States prior to January 1, 1980, shall, to the extent of any unfilled balances, be charged against the levels of restraint established for such goods during the 12-month period beginning on January 1, 1979, and extending through December 31, 1979. In the event that the levels of restraint established for that period have been exhausted by previous entries, such goods shall be subject to the levels set forth in this letter. Textile products in categories 435, 604, and 612 which have been exported prior to January 1, 1980, shall not be subject to this directive.

Textile products in categories 435, 604, and 612 which have been released from the custody of the U.S. Customs Service under the provisions of 19 U.S.C. 1448(b) or 1484(a)(1)(A) prior to the effective date of this directive shall not be denied entry under this directive.

The levels of restraint set forth above are subject to adjustment in the future pursuant to the provisions of the bilateral agreement of December 23, 1977, as amended, between the Governments of the United States and the Republic of Korea which provide, in part, that: (1) Within the aggregate and applicable group limits, specific levels of restraint may be exceeded by designated percentages; (2) these same levels may be increased for carryover and carryforward up to 11 percent of the applicable category limit; (3) consultation levels may be increased within the aggregate and applicable group limits upon agreement between the two governments; and (4) administrative arrangements or adjustments may be made to resolve minor problems arising in the implementation of the agreement. Any appropriate ad-

justments under the provisions of the bilateral agreement referred to above will be made to you by letter.

A detailed description of the textile categories in terms of TSUSA numbers was published in the Federal Register on January 4, 1978 (43 F.R. 884), as amended on January 25, 1978 (43 F.R. 3421), March 3, 1978 (43 F.R. 8828), June 22, 1978 (43 F.R. 26773), September 5, 1978 (43 F.R. 39408), January 2, 1979 (44 F.R. 94), March 22, 1979 (44 F.R. 17545), and April 12, 1979 (44 F.R. 21843).

In carrying out the above directions, entry into the United States for consumption shall be construed to include entry for consumption into the Commonwealth of Puerto Rico.

The actions taken with respect to the Government of Republic of Korea and with respect to imports of cotton, wool, and manmade fiber textile products from the Republic of Korea have been determined by the Committee for the Implementation of Textile Agreements to involve foreign affairs functions of the United States. Therefore, the directions to the Commissioner of Customs, which are necessary for the implementation of such actions, fall within the foreign affairs exception to the rulemaking provisions of 5 U.S.C. 553. This letter will be published in the Federal Register.

Sincerely,

PAUL T. O'DAY,
Acting Chairman, Committee for the Implementation of Textile Agreements.

(T.D. 80-66)

Cotton, Wool, and Manmade Fiber Textile Products—Restriction on Entry

Restriction on entry of cotton, wool, and manmade fiber textile products manufactured or produced in Taiwan

There is published below a directive of December 21, 1979, received by the Commissioner of Customs from the acting chairman, Committee for the Implementation of Textile Agreements, concerning restriction on entry of cotton, wool, and manmade fiber textile products in various categories manufactured or produced in Taiwan.

This directive was published in the Federal Register on December 28, 1979 (44 F.R. 76839), by the committee.

(QUO-2-1)

Dated: February 4, 1980.

WILLIAM D. SLYNE
(For G. Scott Shreve, Acting Director, Duty Assessment Division).

U.S. DEPARTMENT OF COMMERCE,
INDUSTRY AND TRADE ADMINISTRATION,
Washington, D.C., December 21, 1979.

Committee for the Implementation of Textile Agreements

COMMISSIONER OF CUSTOMS,
Department of the Treasury,
Washington, D.C.

DEAR MR. COMMISSIONER: Under the terms of the Arrangement Regarding International Trade in Textiles done at Geneva on December 20, 1973, as extended on December 15, 1977; pursuant to the Bilateral Textile Agreement of June 8, 1978, as amended, concerning cotton, wool, and manmade fiber textile products from Taiwan; and in accordance with the provisions of Executive Order 11651 of March 3, 1972, as amended by Executive Order 11951 of January 6, 1977, you are directed to prohibit, effective on January 1, 1980, and extending through December 31, 1980, entry into the United States for consumption and withdrawal from warehouse for consumption of cotton, wool, and manmade fiber textile products in the following categories, produced or manufactured in Taiwan, in excess of the indicated levels of restraint:

Category	*12-month level of restraint*	
313	43,612,998	square yards
331	454,671	dozen pairs
333/334/335	100,615	dozen of which not more than 52,693 dozen shall be in category 333/334 and not more than 63,014 dozen shall be in category 335
338/339	490,517	dozen
340	619,563	dozen
341	358,895	dozen
342	39,326	dozen
347/348	832,466	dozen of which not more than 408,851 dozen shall be in category 347 and not more than 631,732 dozen shall be in category 348
363	4,000,000	numbers
442	5,556	dozen
444	1,852	dozen
445/446	123,795	dozen
469	50,000	pounds
631	2,109,286	dozen pairs

Category	*12-month level of restraint*	
633/634/635	1,377,873	dozen of which not more than 908,730 dozen shall be in category 633/634 and not more than 675,824 dozen shall be in category 635
643/644	136,719	dozen of which not more than 72,290 dozen shall be in category 543 and not more than 78,101 dozen shall be in category 644
638	1,519,339	dozen
639	5,033,179	dozen
640	3,097,170	dozen
641	657,303	dozen
647	1,815,414	dozen
648	2,999,004	dozen
659	9,187,500	pounds of which not more than 2,725,000 pounds shall be in TSUSA Nos. 703.1000 and 703.0500; not more than 1,700,000 pounds shall be in TSUSA Nos. 380.0429, 380.-8163, 382.0449, and 382.7877 of which not more than 225,000 pounds shall be in TSUSA Nos. 380.0429 and 380.8163 and not more than 1,600,000 pounds shall be in TSUSA Nos. 382.0449 and 382.7877
669	1,282,051	pounds of which not more than 58,018 pounds shall be in TSUSA No. 355.4560

In carrying out this directive entries of textile products in the foregoing categories, except categories 342, 363, 442, 444, and 469, which have been exported to the United States prior to January 1, 1980, shall to the extent of any unfilled balances, be charged against the levels of restraint established for such goods during the 12-month period beginning on January 1, 1979, and extending through December 31, 1979. In the event that the levels of restraint established for that period have been exhausted by previous entries, such goods shall be subject to the levels set forth in this letter. Textile products in

categories 342, 363, 442, 444, and 469 which have been exported prior to January 1, 1980, shall not be subject to this directive.

Textile products in categories 342, 363, 442, 444, and 469 which have been released from the custody of the U.S. Customs Service under the provisions of 19 U.S.C. 1448(b) or 1484(a)(1)(A) prior to the effective date of this directive shall not be denied entry under this directive.

The levels of restraint set forth above are subject to adjustment in the future pursuant to the provisions of the bilateral agreement of June 8, 1978, as amended, which provide in part, that: (1) Within the aggregate and applicable group limits, specific levels of restraint may be exceeded by designated percentages; (2) these same levels may be increased for carryover and carryforward up to 11 percent of the applicable category limit; (3) administrative arrangements or adjustments may be made to resolve minor problems arising in the implementation of the agreement. Any appropriate adjustments under the provisions of the bilateral agreement referred to above will be made to you by letter.

A detailed description of the textile categories in terms of T.S.U.S.A. numbers was published in the Federal Register on January 4, 1978 (43 F.R. 884), as amended by January 25, 1978 (43 F.R. 3421), March 3, 1978 (43 F.R. 8828), June 22, 1978 (43 F.R. 26773), September 5, 1978 (43 F.R. 39408), January 2, 1979 (44 F.R. 94), March 22, 1979 (44 F.R. 17545), and April 12, 1979 (44 F.R. 21843).

In carrying out the above directions, entry into the United States for consumption shall be construed to include entry for consumption into the Commonwealth of Puerto Rico.

The actions taken with respect to the authorities in Taiwan and with respect to imports of cotton, wool, and manmade fiber textile products from Taiwan have been determined by the Committee for the Implementation of Textile Agreements to involve foreign affairs functions of the United States. Therefore, the directions to the Commissioner of Customs, which are necessary for the implementation of such actions, fall within the foreign affairs exception to the rulemaking provisions of 5 U.S.C. 553. This letter will be published in the Federal Register.

Sincerely,

PAUL T. O'DAY,
Acting Chairman, Committee for the Implementation of Textile Agreements.

(T.D. 80-67)

Foreign Currencies—Daily Rates for Countries Not on Quarterly List

Rates of exchange based on rates certified to the Secretary of the Treasury by the Federal Reserve Bank of New York for the Brazil cruzeiro, People's Republic of China yuan, Hong Kong dollar, Iran rial, Philippines peso, Singapore dollar, Thailand baht (tical), and Venezuela bolivar

The Federal Reserve Bank of New York, pursuant to section 522(c), Tariff Act of 1930, as amended (31 U.S.C. 372(c)), has certified buying rates for the dates and foreign currencies shown below. The rates of exchange, based on these buying rates, are published for the information and use of Customs officers and others concerned pursuant to part 159, subpart C, Customs Regulations (19 CFR 159, subpart C).

Brazil cruzeiro:	
January 28-February 1, 1980	$0.0228
People's Republic of China yuan:	
January 28-February 1, 1980	$0.666711
Hong Kong dollar:	
January 28, 1980	$0.208986
January 29, 1980	.208812
January 30, 1980	.208377
January 31, 1980	.206143
February 1, 1980	.206654
Iran rial:	
January 28-February 1, 1980	Not available
Philippines peso:	
January 28-February 1, 1980	$0.1355
Singapore dollar:	
January 28, 1980	$0.464037
January 29, 1980	.463822
January 30, 1980	.464684
January 31, 1980	.464360
February 1, 1980	.464253
Thailand baht (tical):	
January 28-February 1, 1980	$0.048875
Venezuela bolivar:	
January 28-February 1, 1980	$0.2329

(LIQ-3-TRODE)

Dated: February 6, 1980.

G. SCOTT SHREVE,
Acting Director,
Duty Assessment Division.

U.S. Customs Service

General Notice

(TMK-2-RRUEE)

Notice of Application for Recordation of Trade Name

FLORASYNTH, INC.

Application has been filed pursuant to section 133.12 Customs Regulations (19 CFR 133.12), for recordation under section 42 of the act of July 5, 1946, as amended (15 U.S.C. 1124) of the trade name Florasynth, Inc., used by Florasynth, Inc., a corporation organized under the laws of the State of New York, located at 410 East 62d Street, New York, N.Y. 10021.

The applicant states that the trade name is applied to essences and aromatic ingredients used as bases for cosmetics, toilet preparations, perfumes, and colognes, and as flavor in foods, beverages, and tobacco products; essential oils, used as an odorant to mask disinfectants, insecticides, and similar products; extracts, flavors, oils, and emulsions for use in making soft drink sirups and bases; nonalcoholic preparation for producing a foam in soft drinks and a flavoring agent used in the preparation of root beer; orange compound adapted to produce a cloud in nonalcoholic, maltless soft drink beverages and having flavoring ingredients; natural and synthetic organic flavors, extracts, oils, and blenders for alcoholic beverages; imitation vanilla bean flavor; grapefruit juice powder, lemon juice powder, lime juice powder, orange juice powder, and brown sugar powdered flavor; citrus oils for food purposes; onion powder and garlic powder; and coffee, manufactured in Brazil, Canada, England, France, Japan, Mexico, and the United States. Various foreign subsidiaries are authorized to use the trade name. Appropriate accompanying papers were submitted with the application.

Before final action is taken on the application, consideration will be given to any relevant data, views, or arguments submitted in writing by any person in opposition to the recordation of this trade name. Any such submission should be addressed to the Commissioner of

Customs, Washington, D.C. 20229, in time to be received not later than 30 days from the date of publication of this notice in the Federal Register.

Notice of the action taken on the application for recordation of the trade name will be published in the Federal Register.

Dated: February 1, 1980.

DONALD W. LEWIS,
Director, Office of Regulations and Rulings.

Decisions of the United States Customs Court

United States Customs Court

One Federal Plaza
New York, N.Y. 10007

Chief Judge

Edward D. Re

Judges

Paul P. Rao
Morgan Ford
Scovel Richardson
Frederick Landis
James L. Watson
Herbert N. Maletz
Bernard Newman
Nils A. Boe

Senior Judge

Samuel M. Rosenstein

Clerk

Joseph E. Lombardi

Abstracts
Abstracted Protest Decisions

DEPARTMENT OF THE TREASURY, *January 28, 1980.*

The following abstracts of decisions of the United States Customs Court at New York are published for the information and guidance of officers of the Customs and others concerned. Although the decisions are not of sufficient general interest to print in full, the summary herein given will be of assistance to Customs officials in easily locating case and tracing important facts.

ROBERT E. CHASEN,
Commissioner of Customs.

DECISION NUMBER	JUDGE & DATE OF DECISION	PLAINTIFF	COURT NO.	ASSESSED	HELD	BASIS	PORT OF ENTRY AND MERCHANDISE
				Par. or Item No. and Rate	Par. or Item No. and Rate		
P80/18	Re, C. J. January 22, 1980	Verona Dyestuff (Div. of Mobay Chemical Corp.)	76-10-02307	Item 640.30 5% (drums) Item 406.50 20% (chemicals)	Sec. 557, Tariff Act of 1930, as amended Free of duty	Agreed statement of facts	New York Merchandise (drums of dyes and stains) withdrawn from warehouse on 6-27-73, 5-7-73, 11-30-72, 11-29-73 (entered 6-7-72, liquidated 6-6-75) for export to Germany in accordance with sec. 557, *supra*, and reexported to Germany at time of withdrawal
P80/19	Maletz, J. January 22, 1980	Carmichael International Service	76-5-01051	Item 359.50 25¢ per lb. + 30%	Item 346.60 15¢ per lb. + 25%	Agreed statement of facts	Los Angeles Rayon patchwork velvet; pile fabric of man-made fiber

Decisions of the United States Customs Court

Abstracts

Abstracted Reappraisement Decisions

DECISION NUMBER	JUDGE & DATE OF DECISION	PLAINTIFF	COURT NO.	BASIS OF VALUATION	HELD VALUE	BASIS	PORT OF ENTRY AND MERCHANDISE
R80/4	Newman, J. January 22, 1980	YKK Zipper (USA), Inc., et al.	73-7-01861	Constructed value (if exported from Japan prior to 2/1/72) United States value (if exported on or after 2/1/72)	Equal to invoiced unit prices plus 8.5%, net, packed Equal to invoiced unit prices, net, packed	Agreed statement of facts	Los Angeles Zippers and/or zipper parts classified under item 745.70, 745.72 or 745.74
R80/5	Newman, J. January 22, 1980	Yoshida International, Inc.	74-6-01440	Constructed value	Equal to invoiced unit prices plus 8.5%, net, packed	Agreed statement of facts	New York Zippers and/or zipper parts classified under item 745.70, 745.72 or 745.74

Judgment of the U.S. Customs Court in Appealed Case

JANUARY 23, 1980

APPEAL 79-14.—Pistorino & Co., Inc. *v.* United States.—BEAM-CUTTING MACHINES—MACHINES, NSPF, AND PARTS—SHOE MACHINERY AND PARTS—TSUS.—C.D. 4779 affirmed October 11, 1979 (C.A.D. 1234).

International Trade Commission Notices

Investigations by the U.S. International Trade Commission

DEPARTMENT OF THE TREASURY

The appended notices relating to investigations by the U.S. International Trade Commission are published for the information of Customs officers and others concerned.

R. E. CHASEN,
Commissioner of Customs.

[332-73]

Notice of Release for Public Comment of U.S. Administration Draft Comments on Draft Chapters of the Harmonized Commodity Description and Coding System

AGENCY: U.S. International Trade Commission.

ACTION: Release for public comment, pursuant to Commission investigation No. 332-73, under the authority of section 332(g) of the Tariff Act of 1930, as amended, of drafts of, and draft U.S. comments on, the following chapters of the Harmonized Commodity Description and Coding System.

Chapter 56: Wadding, felt and nonwovens; special yarn; twine, cordage, ropes, and cables and articles thereof.
Chapter 57: Textile floor coverings.
Chapter 58: Knitted or crocheted fabrics; pile and chenille fabrics; tufted textile fabrics; woven fabrics of metallised yarn; gauze; tulle and other net fabrics; trimmings.
Chapter 59: Impregnated or coated textile fabrics; elastic textile fabrics; textile articles of a kind suitable for industrial use.
Chapter 60: Articles of apparel and clothing accessories, knitted or crocheted.
Chapter 61: Articles of apparel and clothing accessories, not knitted or crocheted.
Chapter 62: Other made up textile articles.
Chapter 63: Old clothing and old textile articles; rags.

WRITTEN SUBMISSIONS: Parties wishing to submit written comments should do so by February 29, 1980.

HEARING: Parties desiring the Commission to hold a hearing on these draft chapters of the Harmonized Code should contact the Secretary of the Commission by February 22, 1980, and show good cause for holding a hearing.

COPIES OF DOCUMENTS: Copies of the draft chapters and draft U.S. comments thereon which are the subject of this notice are available for public inspection at the offices of the Commission, 701 E Street NW., Washington, D.C. 20436, or at 6 World Trade Center, New York, N.Y. 10048. The Commission will also send copies to interested parties upon request.

FOR FURTHER INFORMATION CONTACT: Eugene A. Rosengarden, Director, Office of Nomenclature, Valuation and Related Activities, U.S. International Trade Commission, 701 E Street NW., Washington, D.C. 20436; telephone, 202-523-0370.

SUPPLEMENTARY INFORMATION: The purpose of this notice is to obtain the comments and views of interested parties with respect to the above mentioned draft chapters of the Harmonized Commodity Description and Coding System, and of the draft U.S. comments thereon.

This notice is being issued pursuant to Commission investigation No. 332-73, instituted on January 31, 1975 (40 F.R. 6329), under section 332(g) of the Tariff Act of 1930. The investigation was initiated in accordance with section 608(c) of the Trade Act of 1974, which provides, in part, that the Commission shall institute an investigation which would provide the basis for—

> (2) full and immediate participation by the U.S. International Trade Commission in the U.S. contribution to technical work of the Harmonized Systems [sic] Committee under the Customs Cooperation Council to assure the recognition of the needs of the U.S. business community in the development of a Harmonized Code reflecting sound principles of commodity identification and specification and modern producing methods and trading practices * * *.

The Harmonized Commodity Description and Coding System (Harmonized Code) is being developed by the Customs Cooperation Council (CCC), an 80-member international organization with headquarters in Brussels, as an international commodity classification system which will be adaptable for modernized customs tariff nomenclature purposes and for recording, handling, and reporting of transactions in international trade. The Harmonized Code will be based on, and in many respects will be an extension of, the Customs Cooperation Council Nomenclature (CCCN), formerly known as the Brussels Tariff Nomenclature (BTN).

Currently, the technical team working under auspices of the CCC prepares drafts of the various chapters of the Harmonized Code for consideration by the Harmonized System Committee, which was established in order to develop the code. These drafts are forwarded to the members and observers of the Committee for their review and submission of written comments. The Committee meets three times a year to consider these drafts and the written comments and presentations of the various delegations. The review of a particular chapter or group of chapters may extend to more than one meeting.

In 1971, the Department of the Treasury established an Interagency Advisory Committee on Customs Cooperation Council Matters in order to provide a basis for interested Federal agencies to participate with respect to CCC matters. In order to establish and develop U.S. programs and policies with respect to the Harmonized Code, the interagency committee has instituted procedures which take into account the provisions of section 608(c) of the Trade Act of 1974, which call for the Commission to contribute to the U.S. technical input to the Harmonized System Committee. Under these procedures the Commission is preparing technical comments and proposals on the various chapters of the Harmonized Code for consideration by the interagency committee in the determination of U.S. proposals with respect to the Harmonized Code. In making proposals, the Commission is seeking and taking into consideration the views of trade and industry and other interested parties and of interested Government agencies.

The draft U.S. comments on the chapters of the Harmonized Code released for public comment today relate specifically to the technical team drafts of these chapters and should be read in conjunction therewith.

In its public notices of May 4, 1976 (41 F.R. 18716 of May 6, 1976), August 9, 1976 (41 F.R. 34370 of August 13, 1976), December 20, 1976 (41 F.R. 55948 of December 23, 1976), September 1, 1977 (42 F.R. 44852 of September 7, 1977), February 7, 1978 (43 F.R. 5902 of February 10, 1978), October 16, 1978 (43 F.R. 48723 of October 19, 1978), February 14, 1979 (44 F.R. 10435 of February 20, 1979), May 16, 1979 (44 F.R. 29740 of May 22, 1979), and September 5, 1979 (44 F.R. 53112 of September 12, 1979), the Commission identified those chapters which have been considered thus far by the Harmonized System Committee, and the chapters for which a technical team draft has been released.

By order of the Commission:

Issued: January 28, 1980.

KENNETH R. MASON,
Secretary.

In the Matter of CERTAIN AUTOMATIC CRANKPIN GRINDERS	Investigation No. 337-TA-60

Commission Order

Complainant, Landis Tool Co., filed a motion with the U.S. International Trade Commission on December 28, 1979, seeking an order tolling the time for filing a petition for reconsideration pursuant to Commission rule 210.56 (19 CFR section 210. 56) of the Commission's determination and order in the "Certain Automatic Crankpin Grinder," investigation No. 337-TA-60, until resolution of its petition for a writ of mandamus filed concurrently with the motion in the U.S. Court of Customs and Patent Appeals. Complainant's motion also sought an order tolling the time for filing an appeal pursuant to section 337(c) of the Tariff Act of 1930, as amended (19 U.S.C. 1337).

After consideration of the matter, the Commission determined that good and sufficient reason for tolling the time for filing a petition for reconsideration has not been shown, and that the Commission has no authority to toll the time for filing an appeal in the U.S. Court of Customs and Patent Appeals.

Accordingly, it is hereby ordered that complainant's motion for a tolling of time is denied.

By order of the Commission.

Issued: January 29, 1980.

KENNETH R. MASON,
Secretary.

Notice of Change in Due Date for Prehearing Statements in Investigation No. 701-TA-2 (Final), Pig Iron From Brazil

AGENCY: U.S. International Trade Commission.

ACTION: Change in the due date for prehearing statements in investigation No. 701-TA-2 (final), "Pig Iron From Brazil," from January 30, 1980, to January 31, 1980.

FOR FURTHER INFORMATION CONTACT: Daniel Leahy, 523-1369.

SUPPLEMENTARY INFORMATION: In accordance with section 207.22 of the Commission's Rules of Practice and Procedure (44 F.R. 76458) prehearing statements must be submitted by parties to an investigation within 15 days after the date of service by the Commission of a public portion of its staff report. The staff report in the subject investigation was served to parties on January 17, 1980,

therefore prehearing statements must be submitted on or before January 31, 1980.

By order of the commission.

Issued: January 28, 1980.

KENNETH R. MASON,
Secretary.

[TA-406-6]

ANHYDROUS AMMONIA FROM THE U.S.S.R.

Notice of Investigation and Hearing

Investigation instituted.—Following receipt on January 18, 1980, of a request from the President (reproduced below), the U.S. International Trade Commission on January 28, 1980, instituted an investigation under section 406(a) of the Trade Act of 1974 (19 U.S.C. 2436(a)) to determine, with respect to imports of anhydrous ammonia, provided for in items 417.22 and 480.65 of the Tariff Schedules of the United States, which is the product of the Union of Soviet Socialist Republics (U.S.S.R.), whether market disruption exists with respect to an article produced by a domestic industry. Section 406(e)(2) of the Trade Act defines market disruption to exist within a domestic industry whenever "imports of an article, like or directly competitive with an article produced by such domestic industry, are increasing rapidly, either absolutely or relatively, so as to be a significant cause of material injury, or threat thereof, to such domestic industry."

The President made the request pursuant to section 406(c) of the Trade Act, having found under that section that there are reasonable grounds to believe that market disruption exists with respect to such anhydrous ammonia the product of the U.S.S.R. The President also found, pursuant to section 406(c), that emergency action was necessary, and took action, under sections 202 and 203 of the Trade Act, limiting the quantity of such anhydrous ammonia, the product of the U.S.S.R. which may enter the United States during the period January 24, 1980, to January 24, 1981, to 1 million short tons (Proclamation 4714 of January 18, 1980, published in the Federal Register of January 21, 1980 (45 F.R. 3875)).

The text of the President's letter to the Commission is as follows—

JANUARY 18, 1980.

Hon. CATHERINE M. BEDELL,
Chairman, International Trade Commission, Washington, D.C.

DEAR MADAM CHAIRMAN: Pursuant to section 406(c) of the Trade Act of 1974, I have today found that there are reasonable grounds to believe that market disruption exists with respect to imports of anhydrous ammonia, provided for in items 417.22 and

480.65 of the Tariff Schedules of the United States, from the Union of Soviet Socialist Republics. I therefore request that you initiate an investigation on such articles under section 406(a) of the Trade Act of 1974.

Sincerely,

JIMMY CARTER

Public hearing.—A public hearing in connection with this investigation will be held in Washington, D.C., at 10 a.m., e.s.t., on Monday, March 3, 1980. The hearing will be held in the hearing room, U.S. International Trade Commission Building, 701 E Street NW., Washington, D.C. All parties will be given an opportunity to be present, to produce evidence, and to be heard at the hearing. Requests to appear at the hearing should be received in writing in the Office of the Secretary to the Commission not later than 5 p.m., Tuesday, February 19, 1980.

A prehearing conference in connection with this investigation will be held in Washington, D.C., at 9:30 a.m., e.s.t., on Thursday, February 21, 1980, in room 117, U.S. International Trade Commission Building, 701 E Street NW.

Written statements.—Interested parties may submit statements in writing in lieu of, and in addition to, appearing at the public hearing. A signed original and 19 true copies of such statements should be submitted. To be assured of their being given due consideration by the Commission, such statements should be received not later than Monday, March 10, 1980.

By order of the Commission.

Issued: January 30, 1980.

KENNETH R. MASON,
Secretary.

In the Matter of CERTAIN COMPUTER FORMS FEEDING TRACTORS AND COMPONENTS THEREOF	Investigation No. 337-TA-77

Order

Pursuant to my authority as Chief Administrative Law Judge of this Commission, I hereby designate Administrative Law Judge Janet D. Saxon as presiding officer in this investigation.

The Secretary shall serve a copy of this order upon all parties of record and shall publish it in the Federal Register.

Issued: January 30, 1980.

Donald K. Duvall,
Chief Administrative Law Judge.

Index

U.S. Customs Service

Treasury decisions:
- Cotton and manmade fiber textile products—Thailand 80–59
- Cotton textiles and cotton textile products—Pakistan 80–60
- Cotton, wool, and manmade fiber textile products:
  - India 80–58
  - Poland 80–61
  - Korea 80–65
  - Taiwan 80–66
- Foreign currencies:
  - Daily certified rates; January 21–25, 1980 80–56
  - Daily certified rates; February 1, 1980 80–67
- Customs Delegation Order No. 56—delegation of authority with respect to decisions under 5 U.S.C. 552 and 5 U.S.C. 552a 80–64
- Performance of functions—Director, Office of Regulations and Rulings 80–63
- Drawback substitution—flue-cured and burley scrap tobacco 80–57
- Synopses of drawback decisions 80–62
  - Electrodes, graphite 80–62–A
  - Staples 80–62–B
  - Garlic products, dehydrated 80–62–C
  - Leaf springs, automotive, truck, industrial and agricultural 80–62–D
  - Tin plate, lithographed 80–62–E
  - Oil additives, lubricating 80–62–F
  - Computer systems, subsystems 80–62–G
  - Corn and peas, canned 80–62–H
  - Pigment colors, chemical 80–62–I
  - Photographic chemicals 80–62–J
  - Cephalexin monohydrate 80–62–K
  - Acetohexamide tablets 80–62–L
  - Orange juice products 80–62–M
  - Gum balls, candy coated 80–62–N
  - Wool, sorted shorn 80–62–O
  - Food products and supplements 80–62–P
  - Insulator, high voltage 80–62–Q
  - Tungsten alloy powder and tungsten alloy parts 80–62–R
  - Steel form coil 80–62–S
  - Avadex BW granular herbicide 80–62–T
  - Fruit juices, canned, bottled, packaged 80–62–U
  - Zinc strip in coils 80–62–V
  - Eclairs 80–62–X
  - Cheesecake, puddings, prewhipped toppings and eclairs 80–62–Y
  - Machinery, hydraulic and mechanical 80–62–Z

Customs Court

Judgment in appealed case (p. —):
Appeal 79–14—Beam cutting machines; machines, NSPF, and parts; shoe machinery and parts; TSUS

MAR 3 1980
J#308-895 Item 950-D T1.11/3:14/9
C-350

Customs Bulletin

Regulations, Rulings, Decisions, and Notices concerning Customs and related matters

and Decisions

of the United States Court of Customs and Patent Appeals and the United States Customs Court

*1.30
contin

Vol. 14 FEBRUARY 27, 1980 No. 9

This issue contains

T.D. 80-68
ERRATUM
General Notice
C.S.D. 80-1 thru 80-15
Appeals From International Trade Commisson' Investigation No. 337-TA-43
C.D. 4838 and 4839
Protest Abstract P80/20 through P80/23
International Trade Commission Notices

THE DEPARTMENT OF THE TREASURY
U.S. Customs Service

NOTICE

The abstracts, rulings, and notices which are issued weekly by the U.S. Customs Service are subject to correction for typographical or other printing errors. Users may notify the U.S. Customs Service, Logistics Management Division, Washington, D.C. 20229, of any such errors in order that corrections may be made before the bound volumes are published.

For sale by the Superintendent of Documents, U.S. Government Printing Office, Washington, D.C. 20402. Price: $1.30 (single copy domestic); $1.65 (single copy foreign). Subscription price: $65.00 a year domestic; $81.25 a year foreign.

U.S. Customs Service

Treasury Decision

(T.D. 80-68)

Supplies and Equipment for Aircraft—Customs Regulations Amended

Section 10.59(f), Customs Regulations, relating to free withdrawal of supplies and equipment for aircraft, amended to add Austria to the list of qualified countries.

TITLE 19—CUSTOMS DUTIES

CHAPTER I—U.S. CUSTOMS SERVICE

PART 10—ARTICLES CONDITIONALLY FREE, SUBJECT TO A REDUCED RATE, ETC.

AGENCY: U.S. Customs Service, Department of the Treasury.

ACTION: Final rule.

SUMMARY: This document amends the Customs Regulations to add Austria to the list of countries whose aircraft are exempt from the payment of Customs duties and internal revenue taxes on supplies and equipment withdrawn from Customs or internal revenue custody for use by the aircraft in certain circumstances. It has been determined that the Government of Austria allows substantially reciprocal privileges to U.S.-registered aircraft engaged in foreign trade. Based on this determination, a reciprocal exemption from duties and taxes has been granted to aircraft registered in Austria.

EFFECTIVE DATE: This exemption became effective on April 11, 1979.

FOR FURTHER INFORMATION CONTACT: Benjamin H. Mahoney, Entry Procedures and Penalties Division, U.S. Customs Service, 1301 Constitution Avenue NW., Washington, D.C. 20229; 202-566-5778.

SUPPLEMENTARY INFORMATION:

BACKGROUND

Sections 309 and 317, Tariff Act of 1930, as amended (19 U.S.C. 1309, 1317), provide that foreign-registered aircraft engaged in foreign

trade may withdraw articles of foreign or domestic origin from Customs or internal revenue custody without the payment of Customs duties and/or internal revenue taxes, for use as supplies (including equipment), ground equipment, maintenance, or repair of the aircraft. This privilege is granted if the Secretary of Commerce finds, and advises the Secretary of the Treasury, that the country in which the foreign aircraft is registered allows substantially reciprocal privileges to U.S.-registered aircraft. Section 10.59(f), Customs Regulations (19 CFR 10.59(f)), lists those countries whose aircraft have been found to be entitled to these privileges.

In accordance with 19 U.S.C. 1309(d), the Deputy Assistant Secretary of Commerce for International Economic Policy and Research, to whom the authority was delegated by the Secretary of Commerce (42 F.R. 44829, 43 F.R. 12056), has found, and by letter dated April 19, 1979, has advised the Secretary of the Treasury, that effective April 11, 1979, the Government of Austria allows privileges substantially reciprocal to those provided in 19 U.S.C. 1309 and 1317 to U.S.-registered aircraft engaged in foreign trade. Corresponding privileges accordingly are extended to aircraft registered in Austria and engaged in foreign trade, effective as of April 11, 1979.

AMENDMENT TO THE REGULATIONS

To reflect the granting of reciprocal privileges to aircraft of Austria, section 10.59(f), Customs Regulations (19 CFR 10.59(f)), is amended by inserting "Austria" in appropriate alphabetical order in the column headed "Country" and the number of this Treasury decision in the opposite column headed "Treasury decision(s)." (Secs. 309, 317, 624, 46 Stat. 690, as amended, 696, as amended, 759 (19 U.S.C. 1309, 1317, 1624).)

INAPPLICABILITY OF PUBLIC NOTICE AND DELAYED EFFECTIVE DATE REQUIREMENTS

Because the subject matter of this document does not constitute a departure from established policy or procedures but merely announces the granting of an exemption for which there is a statutory basis, pursuant to 5 U.S.C. 553(b)(B), notice and public procedure thereon are found to be unnecessary, and pursuant to 5 U.S.C. 553(d)(1), a delayed effective date is not required.

REGULATIONS DETERMINED TO BE NONSIGNIFICANT

In a directive published in the Federal Register on November 8, 1978 (43 F.R. 52120), implementing Executive Order 12044, "Improving Government Regulations," the Treasury Department stated that it considers each regulation or amendment to an existing regulation published in the Federal Register and codified in the Code of

Federal Regulations to be "significant." However, regulations which are nonsubstantive, essentially procedural, do not materially change existing or establish new policy, and do not impose substantial additional requirements or costs on, or substantially alter the legal rights or obligations of those affected, with secretarial approval may be determined not to be significant. Accordingly, it has been determined that this document does not meet the Treasury Department criteria in the directive for "significant" regulations.

DRAFTING INFORMATION

The principal author of this document was Shannon McCarthy, Regulations and Research Division, Office of Regulations and Rulings, U.S. Customs Service. However, personnel from other offices of the Customs Service and the Department of Commerce participated in its development.

Dated: January 31, 1980.

RICHARD J. DAVIS,
Assistant Secretary of the Treasury.

[Published in the Federal Register, Feb. 19, 1980 (45 F.R. 10758]

ERRATUM

In CUSTOMS BULLETIN, volume 14, No. 5, dated January 30, 1980, in T.D. 80–24, in the information concerning the bond for Superior Transfer, Inc., the date of the bond and the approval date should be: December 7, 1978.

U.S. Customs Service

General Notices

(19 CFR Part 101)

General Provisions

Proposed change in the field organization of the Customs Service

AGENCY: U.S. Customs Service, Department of the Treasury.

ACTION: Proposed rule.

SUMMARY: This notice proposes to amend the Customs Regulations to change the field organization of the Customs Service by establishing, on a 2-year experimental basis, a new Customs port of entry at Huntsville, Ala., in the Mobile, Ala., Customs district. The proposed change is part of Customs continuing program to obtain more efficient use of its personnel, facilities, and resources, and to provide better service to carriers, importers, and the public. The proposed amendment to the regulations is not considered to be significant.

DATES: Comments must be received on or before: (60 days from the date of publication in the Federal Register).

ADDRESS: Comments (preferably in triplicate) may be addressed to the Commissioner of Customs, attention: Regulations and Research Division, U.S. Customs Service, 1301 Constitution Avenue NW., room 2335, Washington, D.C. 20229.

FOR FURTHER INFORMATION CONTACT: Bernard J. Harris, Office of Inspection, U.S. Customs Service, 1301 Constitution Avenue NW., Washington, D.C. 20229; 202-566-8157.

SUPPLEMENTARY INFORMATION:

BACKGROUND

As part of a continuing program to obtain more efficient use of its personnel, facilities, and resources, and to provide better services to carriers, importers, and the public, the Customs Service proposes to establish, on a 2-year experimental basis, a new Customs port of entry at Huntsville, Ala., in the Mobile, Ala., Customs district (region V).

According to a study by the Huntsville-Madison County Chamber

of Commerce prepared for the Huntsville-Madison County Airport Authority, over 140 firms in the area conduct import-export operations. The study states that there has been major industrial growth in the area in the electronics and chemical industries geared heavily toward international trade, and that a 124-percent increase in imports and a 75-percent increase in exports is anticipated in the period ending June 30, 1983. As a result, the airport authority and the chamber of commerce have requested the establishment of a Customs port of entry at Huntsville. This request has the support of local business interests and members of the Alabama congressional delegation.

To meet the needs of the Huntsville importing community, which is described in the study as a 28-county area encompassing parts of four States, the State of Alabama is investigating the possibility of establishing a foreign-trade zone in the Huntsville area. Because a foreign-trade zone must be located in or adjacent to a port of entry, the establishment of a port of entry at Huntsville also would aid in establishing a foreign-trade zone there.

In addition, establishing a Customs port of entry at Huntsville may be helpful in redistributing the Customs workload from the congested Los Angeles, Calif., and Chicago, Ill., ports of entry which now clear most imported merchandise destined to the Huntsville area.

The geographical boundaries of the proposed Huntsville, Ala., Customs port of entry would include all the territory within the counties of Limestone, Madison, Morgan, and Marshall, all in the State of Alabama.

CRITERIA FOR PORT-OF-ENTRY ELIGIBILITY

Facilities at a Customs port of entry should include wharfage and anchorage adequate for ocean-going cargo/passenger vessels, airport runways, and other facilities adequate for modern jet aircraft; warehousing space for secure storage of imported cargo pending Customs inspection and release; adequate passenger terminal facilities, administrative office space, cargo inspection areas, primary and secondary inspection areas, storage areas, and other space necessary for regular Customs operations. These facilities, including office space occupied by Customs employees, must be provided without cost to the Government.

In accordance with Customs criteria for port-of-entry status, the actual or potential annual workload should include 1,500 consumption entries (formal and informal), 1,000 scheduled international aircraft arrivals (passenger and cargo), or an appropriate combination.

Currently, no international aircraft arrive at Huntsville. However, Huntsville's port-of-entry application projects 4,652 annual consumption entries (formal and informal).

EVALUATION AT END OF 2-YEAR PERIOD

To determine whether (1) establishing an inland port at Huntsville will relieve the workload at Los Angeles and Chicago and other border ports, and (2) there is sufficient need for Customs services in the area, the Huntsville port of entry would be established on a 2-year experimental basis. Should the projection of annual consumption entries be confirmed during the 2-year period, the number in excess of Customs criterion for entries would be considered if Huntsville failed to meet other Customs workload criteria.

At the conclusion of the 2-year period, Customs would evaluate the amount of international business, continued need for Customs services in the area, and the adequacy of Customs facilities. Should the extent of that business or the adequacy of the facilities fail to meet the criteria used by Customs to determine port-of-entry eligibility, as outlined above, the designation of Huntsville as a port of entry would be revoked.

AMENDMENT TO THE REGULATIONS

If the proposed change is adopted, the list of Customs regions, districts, and ports of entry in section 101.3, Customs Regulations (19 CFR 101.3), would be amended accordingly.

COMMENTS

Before adopting this proposal, consideration will be given to any written comments timely submitted to the Commissioner of Customs. Comments submitted will be available for public inspection in accordance with section 103.8(b), Customs Regulations (19 CFR 103.8(b)), during regular business hours at the Regulations and Research Division, room 2335, Headquarters, U.S. Customs Service, 1301 Constitution Avenue NW., Washington, D.C. 20229.

AUTHORITY

This change is proposed under the authority vested in the President by section 1 of the act of August 1, 1914, 38 Stat. 623, as amended (19 U.S.C. 2), and delegated to the Secretary of the Treasury by Executive Order No. 10289, September 17, 1951 (3 CFR 1949–53 comp., ch. II), and pursuant to authority provided by Treasury Department Order No. 101–5 (44 F.R. 31057).

REGULATION DETERMINED TO BE NONSIGNIFICANT

In a directive published in the Federal Register on November 8, 1978 (43 F.R. 52120), implementing Executive Order 12044, "Improving Government Regulations," the Treasury Department stated that it considers each regulation or amendment to an existing regulation published in the Federal Register and codified in the Code of

Federal Regulations to be "significant." However, regulations which are nonsubstantive, essentially procedural, do not materially change existing or establish new policy, and do not impose substantial additional requirements or costs on, or substantially alter the legal rights or obligations of, those affected, with secretarial approval, may be determined not to be significant. Accordingly, it has been determined that this proposed amendment does not meet the Treasury Department criteria in the directive for "significant" regulations.

DRAFTING INFORMATION

The principal authors of this document were Lawrence P. Dunham and Laurie Strassberg Amster, Regulations and Research Division, Office of Regulations and Rulings, U.S. Customs Service. However, personnel from other Customs offices participated in its development.

Dated: February 4, 1980.

RICHARD J. DAVIS,
Assistant Secretary of the Treasury.

(521680)

General Agreement on Tariffs and Trade

Geneva (1979) protocol to the General Agreement on Tariffs and Trade, parts 1 to 6 of annex I

Reprinted below are the general provisions of the agreements in parts 1 to 6 of annex I, Geneva (1979) protocol to the General Agreement on Tariffs and Trade. Presidential Proclamation 4707 of December 11, 1979, to carry out the Geneva (1979) protocol, was reprinted in the Federal Register on December 13, 1979 (44 F.R. 72348). Schedule XX, annexed to the protocol in part 1 of annex I and which contains a schedule of U.S. concessions, is not reprinted here, but will be printed together with all schedules annexed to that protocol in the "Treaties and Other International Acts" series, and in the bound volumes of "United States Treaties and Other International Agreements," both published under the direction of the Secretary of State and available from the U.S. Government Printing Office. In the reproduction of the agreements in parts 2 to 6 of annex I found below, foreign language texts of the general provisions of those parts, schedules of tariff concessions of other parties to such agreements, as well as aspects superseded, have been omitted.

Dated: February 11, 1980.

SALVATORE E. CARAMAGNO
(For the Director, Office of
Regulations and Rulings).

308-895 O - 80 - 2

Annex I

Texts of Agreements Identified in the Third and Fourth Recitals of Presidential Proclamation 4707 of December 11, 1979

Part 1.—Geneva (1979) Protocol to the General Agreement on Tariffs and Trade

THE CONTRACTING PARTIES TO THE GENERAL AGREEMENT ON TARIFFS AND TRADE

The contracting parties to the General Agreement on Tariffs and Trade and the European Economic Community which participated in the Multilateral Trade Negotiations 1973–79 (hereinafter referred to as "participants"),

Having carried out negotiations pursuant to article XXVIII bis, article XXXIII, and other relevant provisions of the General Agreement on Tariffs and Trade (hereinafter referred to as "the general agreement"),

Have, through their representatives, agreed as follows:

1. The schedule of tariff concessions annexed to this protocol relating to a participant shall become a schedule to the general agreement relating to that participant on the day on which this protocol enters into force for it pursuant to paragraph 5.

2.(a) The reductions agreed upon by each participant shall, except as may be otherwise specified in a participant's schedule, be implemented in equal annual rate reductions beginning January 1, 1980, and the total reduction become effective not later than January 1, 1987. A participant which begins rate reductions on July 1, 1980, or on a date between January 1 and July 1, 1980, shall, unless otherwise specified in that participant's schedule, make effective two-eighths of the total reduction to the final rate on that date followed by six equal installments beginning January 1, 1982. The reduced rate should in each stage be rounded off to the first decimal. The provisions of this paragraph shall not prevent participants from implementing reductions in fewer stages or at earlier dates than indicated above.

(b) The implementation of the annexed schedules in accordance with paragraph 2(a) above shall, upon request, be subject to multilateral examination by the participants having accepted this protocol. This would be without prejudice to the rights and obligations of contracting parties under the general agreement.

3. After the schedule of tariff concessions annexed to this protocol relating to a participant has become a schedule to the general agreement pursuant to the provisions of paragraph 1, such participant

shall be free at any time to withhold or withdraw in whole or in part the concession in such schedule with respect to any product for which the principal supplier is any other participant or any government having negotiated for accession during the multilateral trade negotiations, but the schedule of which, as established in the multilateral trade negotiations, has not yet become a schedule to the general agreement. Such action can, however, only be taken after written notice of any such withholding or withdrawal of a concession has been given to the contracting parties and after consultations have been held, upon request, with any participant or any acceding government, the relevant schedule of tariff concessions relating to which has become a schedule to the general agreement and which has a substantial interest in the product involved. Any concessions so withheld or withdrawn shall be applied on and after the day on which the schedule of the participant or the acceding government which has the principal supplying interest becomes a schedule to the general agreement.

4.(a) In each case in which paragraph 1 (b) and (c) of article II of the general agreement refers to the date of that agreement, the applicable date in respect of each product which is the subject of a concession provided for in a schedule of tariff concessions annexed to this protocol shall be the date of this protocol, but without prejudice to any obligations in effect on that date.

(b) For the purpose of the reference in paragraph 6(a) of article II of the general agreement to the date of that agreement, the applicable date in respect of a schedule of tariff concessions annexed to this protocol shall be the date of this protocol.

5. (a) This protocol shall be open for acceptance by participants, by signature or otherwise, until June 30, 1980.

(b) This protocol shall enter into force on January 1, 1980, for those participants which have accepted it before that date, and for participants accepting after that date, it shall enter into force on the dates of acceptance.

6. This protocol shall be deposited with the Director General to the contracting parties who shall promptly furnish a certified copy thereof and a notification of each acceptance thereof, pursuant to paragraph 5, to each contracting party to the general agreement and to the European Economic Community.

7. This protocol shall be registered in accordance with the provisions of article 102 of the charter of the United Nations.

Done at Geneva this thirtieth day of June, one thousand nine hundred and seventy-nine, in a single copy, in the English and French languages, both texts being authentic. The schedules annexed hereto are authentic in the English, French, and Spanish language as specified in each schedule.

I hereby certify that the foregoing text is a true copy of the Geneva (1979) protocol to the General Agreement on Tariffs and Trade, done at Geneva on June 30, 1979, the original of which is deposited with the Director General to the contracting parties to the General Agreement on Tariffs and Trade.

O. LONG,
Director General.

GENEVA.

Part 2.—Trade Agreement With the People's Republic of Hungary Entered Into on November 18, 1978

AGREEMENT

Agreement on Tariff Matters Between the United States of America and the Hungarian People's Republic

ARTICLE I

The Government of the United States of America agrees to grant to the Hungarian People's Republic in regard to items listed in annex I to this agreement tariff treatment no less favorable than that specified in annex I. The Government of the Hungarian People's Republic agrees to grant to the United States of America in regard to items listed in annex II to this agreement tariff treatment no less favorable than that specified in annex II.

ARTICLE II

Except as provided in article V of this agreement and in any modifications that may be agreed upon by the parties to this agreement, the Government of the United States of America and the Government of the Hungarian People's Republic agree to implement the concessions specified in annexes I and II in accordance with the final act of the Tokyo Round of Multilateral Trade Negotiations, including any provisions of such final act that may pertain to the staging of tariff reductions.

ARTICLE III

1. The Government of the United States of America and the Government of the Hungarian People's Republic shall, with respect to matters provided for in this agreement, apply the provisions of the General Agreement on Tariffs and Trade in accordance with the Agreement on Trade Relations between the United States of America and the Hungarian People's Republic.

2. If the parties agree, any disputes arising under this agreement

may be settled through use of the procedures of the General Agreement on Tariffs and Trade. In other cases, the parties to this agreement will proceed as follows:

A. Each party to this agreement shall, upon request of other party, enter into bilateral consultations with respect to any matter concerning the operation of or obligations under this agreement. Such consultations may include requests for renegotiation of the agreement or complaints that benefits accruing under the agreement have been directly or indirectly nullified or impaired.

B. If within 60 days following a request for consultations concerning a complaint that benefits accruing under this agreement have been nullified or impaired there has been no satisfactory settlement of the issue, then either party may suspend the application, with respect to the other party, of such concessions or obligations under this agreement as it shall determine to be appropriate in the circumstances, and the other party may take such action as it considers appropriate.

ARTICLE IV

Nothing in this agreement will affect the U.S. invocation of article XXXV of the General Agreement on Tariffs and Trade, as qualified by the Agreement on Trade Relations between the United States of America and the Hungarian People's Republic and letters exchanged between the two Governments on the date of that agreement.

ARTICLE V

1. Upon a successful conclusion of the Tokyo Round of Multilateral Trade Negotiations, each party to the agreement shall determine whether a satisfactory overall balance of concessions has been achieved between the two parties. Thereafter, this agreement shall enter into force on the 30th day following the parties' written notification to each other of approval of the overall balance referred to in the preceding sentence.

2. Either party to this agreement may at any time withdraw, in whole or in part, one or more concessions made under this agreement. After this agreement has entered into force, such withdrawals shall be subject to the provisions of article III of this agreement.

3. This agreement shall cease to be effective at any time, or for any period, that the Agreement on Trade Relations between the United States of America and the Hungarian People's Republic is not in effect.

4. This agreement may be terminated by either party upon 6 months written notice to the other party.

Done in four original copies at Budapest, this 18th day of Novem-

ber 1978, two copies each in English and Hungarian, each of the four texts being equally authentic.

ALAN WM. WOLFF
FOR THE UNITED STATES OF AMERICA

JÁNOS NYERGES
FOR THE HUNGARIAN PEOPLE'S REPUBLIC

DEPUTY SPECIAL REPRESENTATIVE
FOR TRADE NEGOTIATIONS,
Washington, November 18, 1978.

Mr. JÁNOS NYERGES,
Special Representative of the Hungarian Government to the International Economic Organizations, Budapest.

EXCELLENCY: I have the honour to refer to the Agreement on Tariff Matters between the United States of America and the Hungarian People's Republic.

With respect to that agreement, the Government of the United States of America acknowledges that the parties may need to adjust their schedules of concessions as the Tokyo Round of Multilateral Trade Negotiations draws to a conclusion. These adjustments may be made prior to the entry into force of this agreement. The Government of the United States of America wishes to express the mutual understanding of the parties to this agreement that, where appropriate, any such adjustments will be offset by adequate modifications.

Accept, Excellency, renewed assurances of my highest esteem.

Sincerely,

Ambassador ALAN WM. WOLFF,
Deputy Special Representative for Trade Negotiations.

DEPUTY SPECIAL REPRESENTATIVE FOR TRADE NEGOTIATIONS,
Washington, November 18, 1978.

Mr. JÁNOS NYERGES,
Special Representative of the Hungarian Government to the International Economic Organizations, Budapest.

EXCELLENCY: I have the honour to refer to the Agreement on Tariff Matters between the United States of America and the Hungarian People's Republic.

Our Governments have agreed to assess the overall balance provided for in that agreement, prior to its entry into force, at the conclusion of the Tokyo Round of Multilateral Trade Negotiations (MTN). At the time of that assessment, the Government of the United States will, in the event that it offers concessions in the MTN to countries that are principal suppliers of item number 107.35 of the U.S. Tariff Schedules (pork, prepared or preserved, boned, cooked, and canned)

or other products, extend the same concessions to imports from the Hungarian People's Republic. The Government of the United States of America recognizes that if it is not possible to make additional concessions, the Government of the Hungarian People's Republic may withdraw its proposed concessions on phosphated mineral or chemical fertilizer.

Accept, Excellency, renewed assurances of my highest esteem.

Sincerely,

Ambassador ALAN WM. WOLFF,
Deputy Special Representative for Trade Negotiations.

HUNGARIAN PEOPLE'S REPUBLIC,
MINISTRY OF FOREIGN TRADE,
November 18, 1978.

His Excellency ALAN WM. WOLFF,
Deputy Special Representative for Trade Negotiations,
Washington, D.C.

EXCELLENCY: I have the honour to refer to your letters concerning the Agreement on Tariff Matters between the Government of the United States of America and the Government of the Hungarian People's Republic, and in particular concerning adjustments to the schedules of concessions in that Agreement that may be made as the Tokyo Round of Multilateral Trade Negotiations is concluded.

I have further the honour to inform you that the Government of the People's Republic of Hungary agrees with the content of your letters.

Accept, Excellency, renewed assurances of my highest esteem.

Sincerely,

JANOS NYERGES,
Special Representative of the Hungarian Government to the International Economic Organizations.

OFFICE OF THE SPECIAL REPRESENTATIVE
FOR TRADE NEGOTIATIONS,
Washington, November 26, 1979.

Mr. JANOS NYERGES,
Special Representative of the Hungarian Government to the International Economic Organizations, Budapest.

EXCELLENCY: I have the honor to refer to the Agreement on Tariff Matters between the United States of America and the Hungarian People's Republic signed November 18, 1978.

As provided for in article V of the agreement and in the side letters

attached to the agreement, the United States has found it necessary to adjust its schedule of concessions annexed to the agreement as annex I during the concluding months of the Tokyo Round of Multilateral Trade Negotiations. Accordingly, I have the pleasure to transmit to you the revised schedule of U.S. concessions to be annexed to the agreement as annex I.

Accept, Excellency, renewed assurances of my highest esteem.

Sincerely,

WILLIAM B. KELLY, Jr.,
Associate Special Trade Representative.

ANNEX I.—SCHEDULE OF TARIFF CONCESSIONS OF THE UNITED STATES OF AMERICA

Tariff item No.	Brief description	Current rate	Offer rate
107.40	Beef or veal, pickled or cured, valued not over 30 cents per lb.	3¢ per lb	1¢ per lb.
107.52	Beef in airtight containers, n.e.s	7.5% ad val	3% ad val.
107.55	Beef and veal, prepared or preserved, n.s.p.f., valued not over 30 cents per lb.	3¢ per lb	2¢ per lb.
107.63[1]	Beef and veal, prepared or preserved, n.s.p.f., valued over 30 cents per lb.	10% ad val	4% ad val.
147.77	Grapes, prepared or preserved, except dried	17.5% ad val	7% ad val.
161.71	Paprika, ground or not ground	5¢ per lb	2¢ per lb.
161.75	Parsley, manufactured	15% ad val	6% ad val.
319.01	Hand-loomed colored fabrics made by a cottage industry, wholly of cotton, of number 14 or coarser.	9% ad val	6% ad val.
319.03	Hand-loomed colored fabrics made by a cottage industry, wholly of cotton, of numbers 15 to 34.	11.5% ad val	6% ad val.
319.05	Hand-loomed colored fabrics made by a cottage industry, wholly of cotton, of numbers 35 to 49.	13% ad val	6% ad val.
319.07	Hand-loomed colored fabrics made by a cottage industry, wholly of cotton, of numbers 50 to 59.	14.5% ad val	6% ad val.
319.21	Typewriter ribbon fabric, wholly of cotton, not fancy or figured, not bleached or colored, of numbers 51 to 59.	7.5% ad val. + 0.25% ad val. for each number.	5.2% ad val. + 0.2% ad val. for each number.
319.23	Typewriter ribbon fabric, wholly of cotton, not fancy or figured, not bleached or colored, of numbers 60 to 79.	5¢ per lb. + 7.5% ad val. + 0.25% ad val. for each number.	3.5¢ per lb. + 5.2% ad val. + 0.2% ad val. for each number.
319.25	Typewriter ribbon fabric, wholly of cotton, not fancy or figured, not bleached or colored, of numbers 80 to 140.	5¢ per lb. + 27.5% ad val.	3.5¢ per lb. + 19.2% ad val.
319.27	Typewriter ribbon fabric, wholly of cotton, not fancy or figured, bleached but not colored.	Base rate + 2.5% ad val.	Base rate + 1.8% ad val.
319.29	Typewriter ribbon fabric, wholly of cotton, not fancy or figured, colored whether or not bleached.	Base rate + 4.5% ad val.	Base rate + 3.2% ad val.
322.10	Woven cotton fabrics, n.e.s., not fancy or figured, colored whether or not bleached, of number 10.	11.41% ad val	8.7% ad val.
335.75	Other woven fabrics, of vegetable fiber (except cotton), not over 4 oz. per square yard, n.e.s.	3.2% ad val.	3% ad val.
335.95	Other woven fabrics, of vegetable fibers (except cotton), over 4 oz. per square yard, n.e.s.	5% ad val	3% ad val.

Footnotes at end of table.

ANNEX I.—SCHEDULE OF TARIFF CONCESSIONS OF THE UNITED STATES OF AMERICA—Continued

Tariff item No.	Brief description	Current rate	Offer rate
379.41 [2]	Men's and boys' cotton knit dressing gowns, including bathrobes, beach robes, lounging robes, and similar apparel, other than lace or net, not ornamented.	21% ad val.	8% ad val.
379.41 [2]	Men's and boys' cotton knit pajamas and other nightwear, other than lace or net, not ornamented.	21% ad val.	8% ad val.
379.79 [3]	Men's and boys' wool wearing apparel, other than lace or net, not knit, valued not over $4 per pound, excluding coats, shirts, suits, trousers, slacks, and shorts.	25¢ per lb. plus 21% ad val.	17% ad val.
429.19 [4]	Butylene dichloride and propylene dichloride	1.5¢ per lb. plus 7.5% ad val.	0.9¢ per lb, plus 4.6% ad val.
429.29 [4]	Ethlyene dichloride	1.5¢ per lb. plus 7.5% ad val.	0.6¢ per lb. plus 3% ad val.
436.00	Natural drugs in forms such as tablets, pills, etc., including powders in medicinal doses.	The rate provided for such product, but not less than 5% ad val.	The rate provided for such product, but not less than 3.7% ad val.
437.14	Opium alkaloids and their compounds	$1.50 per oz.	$1 per oz.
437.20	Other alkaloids and their compounds, synthetic, n.s.p.f.	5% ad val.	3.7% ad val.
437.58	Hormones, natural, not artifically mixed	2% ad val.	1.8% ad val.
461.10	Bath salts, perfumed	10% ad val.	5.8% ad val.
461.15	Bay rum or bay water	8¢ per lb. plus 12% ad val.	4¢ per lb. plus 6.1% ad val.
461.20	Floral or flower waters	4% ad val.	Free.
461.30	Perfumes, colognes, and toilet waters, not containing alcohol.	7.5% ad val.	5% ad val.
461.35	Perfumes, colognes, and toilet waters, containing alcohol.	8¢ per lb. plus 7.5% ad val.	5% ad val.
461.40	Cosmetics and other toilet preparations, not containing alcohol.	7.5% ad val.	4.9% ad val.
461.45	Cosmetics and other toilet preparations, containing alcohol.	8¢ per lb. + 7.5% ad val.	5¢ per lb. + 4.5% ad val.
466.05	Castile soap	4% ad val.	3.1% ad val.
466.10	Toilet soap, valued not over 20 cents per lb	0.5¢ per lb. + 5% ad val.	0.3¢ per lb. + 3.3% ad val.
466.15	Toilet soap, valued over 20 cents per lb	0.8¢ per lb. + 5% ad val.	0.5¢ per lb. + 3.6% ad val.
466.20	Soap made in whole or in part from castor oil	7% ad val.	4.7% ad val.
466.25	Soap and soap powder, n.e.s. (including all medicinal soap and soap powder).	0.5¢ per lb. + 4% ad val.	0.4¢ per lb. + 2.9% ad val.
466.30	Synthetic detergents	5% ad val.	Free.
533.72 [5]	Steins with permanently attached pewter lids, of nonbone chinaware.	22.5% ad val.	9% ad val.
533.74 [5]	Mugs and other steins of nonbone chinaware	22.5% ad val.	17.5% ad val.
533.76 [5]	Candy boxes, decanters, punch bowls, pretzel dishes, tidbit dishes, tiered servers, bonbon dishes, egg cups, spoons and spoon rests, oil and vinegar sets, tumblers and salt and pepper shaker sets, of nonbone chinaware.	22.5% ad val.	9% ad val.
533.78 [6]	Cups valued over $8 per dozen; saucers valued over $5.25 per dozen; soups, oatmeals, and cereals valued over $9.30 per dozen; plates not over 9 inches in maximum diameter and valued over $8.50 per dozen; plates over 9 but	5¢ per dozen + 17.5% ad val. [7]	8% ad val.

Footnotes at end of table.

308-895 O - 80 - 3

ANNEX I.—SCHEDULE OF TARIFF CONCESSIONS OF THE UNITED STATES OF AMERICA—Continued

Tariff item No.	Brief description	Current rate	Offer rate
	not over 11 inches in maximum diameter and valued over $11.50 per dozen; platters or chop dishes valued over $40 per dozen; sugars valued over $23 per dozen; creamers valued over $20 per dozen; and beverage servers valued over $50 per dozen.		
534.84...	Smokers articles and other household articles, n.s.p.f., of fine-grained earthenware or stoneware, over $3 but not over $10 per dozen.	5¢ per doz. pieces + 15% ad val.[8]	7% ad val.
534.94...	Smokers articles and other household articles, n.s.p.f., of nonbone chinaware or subporcelain.	22.5% ad val	9% ad val.
541.11...	Ordinary glass, cast or rolled, not ground, etc., over 4 oz. per sq. ft.	0.3¢ per lb	0.2¢ per lb.
542.31...	Ordinary glass, n.e.s., not ground, etc., over 16 oz. but not over 28 oz. per square foot, not over 40 united inches.	0.7¢ per lb	0.4¢ per lb.
542.33...	Ordinary glass, n.e.s., not ground, etc., over 16 oz. but not over 28 oz per square foot, over 40 but not over 60 united inches.	0.9¢ per lb	0.4¢ per lb.
542.35...	Ordinary glass, n.e.s., not ground, etc., over 16 oz. but not over 28 oz. per square foot, over 60 but not over 100 united inches.	1.1¢ per lb	0.4¢ per lb.
542.42...	Ordinary glass, n.e.s., not ground, etc., over 28 oz. per square foot, not over 2½ square feet in area.	0.7¢ per lb	0.5¢ per lb.
542.44...	Ordinary glass, n.e.s., not ground, etc., over 28 oz. per square foot, over 2½ but not over 7 square feet in area.	0.9¢ per lb	0.5¢ per lb.
546.52...	Other glass household articles, n.s.p.f., valued not over $0.30 each.	50% ad val	38% ad val.
546.64[9]..	Other glass household articles, n.s.p.f., cut or engraved, valued over $5 each.	15% ad val	7.2% ad val.
546.68[10].	Other glass household articles, n.s.p.f., not cut or engraved, valued over $5 each.	15% ad val	7.2% ad val.
618.45...	Aluminum hollow cast extrusion ingots	0.6¢ per lb.[11]	1.5% ad val.
618.47...	Aluminum pipes, tubes, and blanks therefor, and pipe and tube fittings, n.e.s.	9.5% ad val	5.7% ad val.
646.80...	Padlocks of base metal, not of cylinder or pin tumbler construction, not over 1.5 inches in width.	6¢ per doz. + 4% ad val.[12]	4.1% ad val.
646.81...	Padlocks of base metal, not of cylinder or pin tumbler construction, over 1.5 but not over 2.5 inches in width.	9¢ per doz. + 4% ad val.[13]	3.8% ad val.
646.83...	Padlocks of base metal, of cylinder or pin tumbler construction, not over 1.5 inches in width.	40¢ per doz. + 5% ad val.[14]	6.1% ad val.
646.84...	Padlocks of base metal, of cylinder or pin tumbler construction, over 1.5 but not over 2.5 inches in width.	30¢ per doz. + 4% ad val.[15]	4.8% ad val.
646.85...	Padlocks of base metal, of cylinder or pin tumbler construction, over 2.5 inches in width.	40¢ per doz. + 4% ad val.[16]	4.2% ad val.
646.86...	Cabinet locks of base metal, not of cylinder or pin tumbler construction, not over 1.5 inches in width.	15¢ per doz. + 4.25% ad val.[17]	5.3% ad val.
646.87...	Cabinet locks of base metal, not of cylinder or pin tumbler construction, over 1.5 but not over 2.5 inches in width.	21¢ per doz. + 5% ad val.[18]	5.6% ad val.

Footnotes at end of table.

ANNEX I.—SCHEDULE OF TARIFF CONCESSIONS OF THE UNITED STATES OF AMERICA—Continued

Tariff item No.	Brief description	Current rate	Offer rate
646.88	Cabinet locks of base metal, not of cylinder or pin tumbler construction, over 2.5 inches in width.	32¢ per doz. + 4% ad val.[19]	12.3% ad val.
646.89	Cabinet locks of base metal, of cylinder or pin tumbler construction.	40¢ per doz. + 4% ad val.[20]	5.3% ad val.
646.90	Luggage locks and parts and luggage frames incorporating locks.	11% ad val.	6.2% ad val.
646.92	Locks and padlocks of base metal, n.e.s.	9.5% ad val.	5.7% ad val.
648.51	Drainage tools, scoops, shovels, and spades, and parts thereof.	7.5% ad val.	3% ad. val.
648.53	Picks and mattocks, and parts thereof.	3.5% ad val.	2.8% ad val.
648.55	Agricultural or horticultural hoes and rakes and parts thereof.	7.5% ad val.	3% ad val.
648.57	Hoes and rakes, and parts thereof, n.e.s.	7.5% ad val.	4.9% ad val.
648.61	Agricultural or horticultural forks and parts, except hay or manure forks.	3.5% ad val.	2.8% ad val.
648.63	Forks and parts thereof, n.e.s.	7.5% ad val.	3% ad val.
648.67	Axes, adzes, hatchets, and similar hewing tools, and parts thereof	11% ad val.	6.2% ad val.
648.69	Scythes, sickles, grass hooks, corn knives, and parts thereof.	4% ad val.	Free.
648.71	Hay knives, and parts thereof.	1¢ each + 6% ad val.	0.6¢ each + 3.8% ad val.
648.73	Hedge and grass shears, and parts thereof.	5¢ each + 11% ad val.	2¢ each + 5.1% ad val.
648.75	Pruning shears and sheep shears, and parts thereof.	2¢ each + 4% ad val.	1¢ each + 2.8% ad val.
648.80	Slip-joint pliers, not forged, not over $6 per dozen.	20% ad val.	12% ad val.
648.82	Slip-joint pliers, n.e.s.	20% ad val.	12% ad val.
648.85	Pliers, n.e.s., nippers, and pincers and hinged tools to hold and splice wire.	1.6¢ each + 10% ad val.	1¢ each + 5.5% ad val.
648.89	Parts of pliers, nippers, pincers, and hinged tools for splicing wire.	9.5% ad val.	5.7% ad val.
648.91	Tin snips, and parts thereof.	5¢ each + 11% ad val.	2¢ each + 4.4% ad val.
648.93	Bolt and chain clippers, etc., with cutting part containing dutiable alloys.	15% ad val.	6% ad val.
648.95	Bolt and chain clippers, etc., n.e.s.	10.5% ad val.	4.2% ad val.
648.97	Pipe tools (except cutters), wrenches, spanners, and parts therof.	11% ad val.	9% ad val.
661.67	Industrial machinery involving temperature change, for making cellulosic pulp, paper or paperboard, and parts thereof	3.5% ad val.	2.4% ad val.
661.68	Industrial machinery, etc. for treatment of materials involving temperature changes, n.e.s., and parts thereof.	6.5% ad val.	4.2% ad val.
674.30	Metal-working machine tools for cutting or hobbing gears.	10% ad val.	5.8% ad val.
674.32	Boring, drilling, and milling machines for metal working.	6% ad val.	4.2% ad val.
674.35	Metal-working machine tools, n.e.s.	7.5% ad val.	4.4% ad val.
674.40	Reciprocating gang-saw machines.	5.5% ad val.	3.9% ad val.
674.42	Machine tools, n.e.s.	5% ad val.	3% ad val.
674.50	Tool holders used principally with machine tools.	7.5% ad val.	4.9% ad val.
674.51	Cast-iron parts, for machine tools (except malleable cast-iron) not alloyed and not advanced, etc.	Free.	Free.

Footnotes at end of table.

ANNEX I.—SCHEDULE OF TARIFF CONCESSIONS OF THE UNITED STATES OF AMERICA—Continued

Tariff item No.	Brief description	Current rate	Offer rate
674.52	of Parts metal-working machines for cutting or hobbing gears.	10% ad val	5.8% ad val.
674.53	Other parts for machine tools, n.e.s	7% ad val	4.7% ad val.
674.55	Machines used principally as machine tool accessories.	5% ad val	3.7% ad val.
682.20	Synchronous electric motors, under 1/10 horsepower, valued not over $4 each.	25% ad val	10% ad val.
682.25	Electric motors under 1/10 horsepower, n.e.s	12.5% ad val	6.6% ad val.
682.30	Electric motors of 1/10 or more but not over 1/10 horsepower.	6% ad val	4.2% ad val.
682.41 [21]	Electric motors 1 horsepower or over but not over 20 horsepower.	5% ad val	3.7% ad val.
682.45 [21]	Electric motors over 20 horsepower but under 200 horsepower.	5% ad val	Free.
682.50	Electric motors of 200 or more horsepower	6% ad val	4.2% ad val.
683.95	Industrial, and laboratory electric furnaces, etc. n.e.s., and parts.	5% ad val	2.5% ad val.
684.50	Electrothermic appliances and apparatus, n.e.s., and parts.	5.5% ad val	3.9% ad val.
684.70	Microphones, loudspeakers, head phones, etc., and parts.	7.5% ad val	4.9% ad val.
686.80	Filament lamps operating at less than 100 volts, n.e.s.	4% ad val	Free.
687.58 [22]	Other electronic tubes, etc., n.e.s	6% ad val	4.2% ad val.
692.04	Motor buses	4% ad val	3.1% ad val.
692.32 [23]	Automobile truck tractors, if imported without their trailers.	4% ad val	3.1% ad val.
706.04	Flat goods of reptile leather	7% ad val	4.7% ad val.
706.06	Luggage and handbags of reptile leather	8.5% ad val	5.3% ad val.
706.09 [24]	Handbags, of leather other than reptile, valued over $20 each.	10% ad val	9% ad val.
706.13 [24]	Luggage of leather other than reptile	10% ad val	8% ad val.
706.16 [25]	Luggage and handbags, etc., of willow	10% ad val	5.8% ad val.
706.17 [26]	Luggage and handbags, etc., of rattan or palm leaf.	25% ad val	18% ad val.
706.18 [27]	Luggage and handbags, etc., of unspun vegetable materials, n.e.s.	8.5% ad val	5.3% ad val.
706.20	Luggage and handbags, etc., of textile materials, wholly or in part of braid.	21% ad val	8.4% ad val.
706.22	Luggage, and handbags, etc., of cotton and not of pile or tufted construction.	15% ad val	7.2% ad val.
706.30	Luggage and handbags, etc., of reinforced or laminated plastics.	10.5¢ per lb. + 8.5% ad val.	5.5¢ per lb. + 4.6% ad val.
709.01	Optical mirrors and reflectors for medical use	22.5% ad val	9% ad val.
709.03	Binocular loupes for eye examinations	12.5% ad val	6.6% ad val.
709.05	Optical instruments and appliances, n.e.s., and parts, for medical use.	25% ad val	10% ad val.
709.06	Anesthetic apparatus and instruments (except syringes), and parts.	9.5% ad val	5.7% ad val.
709.07	Basal metabolism apparatus, and parts thereof	11% ad val	6.2% ad val.
709.09	Bougies, catheters, drains and sondes, and parts thereof.	6% ad val	4.2% ad val.
709.10	Percussion hammers, stethoscopes and stethoscope parts.	9.5% ad val	5.7% ad val.
709.11	Sphygmomanometers, tensimeters, and oscillometers, and parts thereof.	4.5% ad val	3.4% ad val.
709.13	Syringes, including hypodermic, and parts thereof (except needles).	21% ad val	8.4% ad val.

Footnotes at end of table.

ANNEX I.—SCHEDULE OF TARIFF CONCESSIONS OF THE UNITED STATES OF AMERICA—Continued

Tariff item No.	Brief description	Current rate	Offer rate
709.15	Electro-surgical apparatus, and parts thereof	18% ad val.	7.9% ad val.
709.17	Electro-medical apparatus n.s.p.f., and parts thereof.	6% ad val.	4.2% ad val
709.19	Dental burs	11% ad val.	6.2% ad val.
709.21	Dental hypodermic needles	8.5% ad val.	5.3% ad val.
709.23	Medical, dental, etc. needles, n.e.s	16% ad val.	6.4% ad val.
709.25	Dental instruments, and parts thereof	7% ad val.	4.7% ad val.
709.27	Medical, surgical, and veterinary instruments and apparatus, n.s.p.f., and parts thereof.	18% ad val.	7.9% ad val.
709.40	Mechano-therapy appliances and massage apparatus, and parts thereof.	6% ad val.	4.2% ad val.
709.45	Oxygen therapy or similar apparatus; breathing appliances; and parts of the foregoing.	5% ad val.	3.7% ad val.
709.50	Hearing aids and parts thereof	6% ad val.	4.2% ad val.
709.55	Artificial teeth and dentures n.s.p.f	22.5% ad val.	9% ad val.
709.56	Bone and joint prostheses, bone plates, screws, nails, and other internal devices and appliances.	18% ad val.	7.2% ad val.
709.57	Orthopedic appliances and similar articles, prosthetic articles, and fracture appliances, n.e.s.	10% ad val.	5.8% ad val.
709.61	X-ray tubes and parts of X-ray tubes	3% ad val.	2.5% ad val.
709.63	X-ray apparatus and parts n.e.s	2.5% ad val.	2.1% ad val.
709.66	Radiation apparatus n.s.p.f. and parts thereof	6% ad val.	4% ad val.
724.10	Motion-picture film, with pictures, or pictures and sound, recorded, n.e.s.	0.48¢ per lin. ft.	Free.
724.20	Sound recordings, n.e.s., for motion picture exhibits.	0.5¢ per lin. ft.	0.2¢ per lin. ft.
724.25	Phonograph records, n.e.s	5% ad val.	3.7% ad val.
727.10	Furniture and parts, n.s.p.f., of unspun fibrous vegetable material.	16% ad val.	7.5% ad val.
727.15	Bent-wood furniture and parts thereof, n.s.p.f	12.5% ad val.	6.6% ad val.
727.23 [28]	Folding director's chairs, of wood	8.5% ad val.	5.3% ad val.
727.25 [29]	Other folding chairs of wood	8.5% ad val.	5.3% ad val.
727.27 [30]	Teak chairs	8.5% ad val.	3.4% ad val.
727.29 [31]	Other wood chairs, not of teak and not folding	8.5% ad val.	5.3% ad val.
727.35	Furniture of wood (excluding chairs) n.s.p.f	5% ad val.	2.5% ad val.
727.40	Furniture parts of wood, n.s.p.f	8.5% ad val.	5.3% ad val.
727.45	Furniture and parts, of textile materials, except cotton.	17.5% ad val.	7% ad val.
727.47	Furniture and parts, of reinforced or laminated plastics.	15% ad val.	6% ad val.
727.50 [32]	Furniture and parts, of rubber or plastics, n.s.p.f.	6% ad val.	2.4% ad val.
727.52	Furniture and parts, of copper, n.s.p.f	6% ad val.	4.2% ad val.
727.55	Other furniture, n.e.s	10% ad val.	4% ad val.
732.04	Bicycles, not over 19 inch wheels, over $6.25 but not over $8.33⅓ each.	93.5¢ each	45¢ each.
732.16	Bicycles, over 25 inch wheels, less than 36 lbs., over $8.33⅓ but not over $16.66⅔ each.	93¢ each	65¢ each.
732.21 [33]	Bicycles, over 25 inch wheels, over 36 lbs., not over $16.66⅔ each.	15% ad val.	7.2% ad val.
740.10	Jewelry, etc. of precious metals, stones, pearls, etc, n.e.s.	12% ad val.	6.5% ad val.
740.30	Jewelry, etc. n.s.p.f. and parts, not over 20 cents per dozen pieces or parts.	18% ad val.	7.2% ad val.

Footnotes at end of table.

ANNEX I.—SCHEDULE OF TARIFF CONCESSIONS OF THE UNITED STATES OF AMERICA—Continued

Tariff item No.	Brief description	Current rate	Offer rate
740.34	Watch bracelets n.s.p.f., valued over 20¢ but not over $5 per dozen.	35% ad val.	14% ad val.
740.35	Watch bracelets n.s.p.f., valued over $5 per dozen.	35% ad val.	14% ad val.
740.38	Jewelry, etc. n.s.p.f., and parts, valued over 20 cents per dozen pieces or parts.	27.5% ad val.	11% ad val.
740.50	Rosaries and chaplets	7.5% ad val.	4.9% ad val.
740.55	Crucifixes and medals, of precious metals	17.5% ad val.	7.8% ad val.
740.60	Crucifixes and medals, n.e.s.	10% ad val.	5.8% ad val.
740.70	Chains, etc., of precious metals, for use in jewelry.	17% ad val.	7% ad val.
740.75	Chains, etc., other than of precious metals, for jewelry, not over 30 cents per yard.	20% ad val.	8% ad val.
740.80	Chains, etc., other than of precious metals, for jewelry, over 30 cents per yard.	27.5% ad val.	11% ad val.
750.26 [24]	Whiskbrooms of broom corn, not over 32 cents each, under quota.	20% ad val.	8% ad val.
750.29	Brooms, etc. of broom corn, not over 96 cents each, under quota.	20% ad val.	8% ad val.
772.51	Pneumatic tires, n.e.s.	4% ad val.[25]	4% ad val.
772.65	Hose, pipe and tubing n.s.p.f. suitable for conducting gases or liquids, of rubber or plastics.	4% ad val.	3.1% ad val.
790.39	Pneumatic mattresses and other inflatable articles, n.s.p.f.	6% ad val.	4.2% ad val.

[1] 107.63 is a new item to be established Jan. 1, 1980, from part of existing item 107.60.
[2] 379.41 is a new item to be established Jan. 1, 1982, from part of existing item 380.06.
[3] 379.79 is a new item to be established Jan. 1, 1982, from part of existing item 380.63.
[4] 429.19 and 429.29 are new items to be established Jan. 1, 1980, from existing item 429.20.
[5] 533.72, 533.74, and 533.76 are new items to be established Jan. 1, 1980, from existing item 533.71.
[6] 533.78 is a new item to be established Jan. 1, 1980, from part of existing item 533.77.
[7] This rate will be converted to 18% ad val. on Jan. 1, 1980.
[8] This rate will be converted to 15.9% ad val. on Jan. 1, 1980
[9] 546.64 is a new item to be established Jan. 1, 1980, from part of existing item 546.58.
[10] 546.68 is a new item to be established Jan. 1, 1980, from part of existing item 546.59.
[11] This rate will be converted to 2.3% ad val. on Jan. 1, 1980.
[12] This rate will be converted to 5.7% ad val. on Jan. 1, 1980.
[13] This rate will be converted to 5.3% ad val. on Jan. 1, 1980.
[14] This rate will be converted to 10.7% ad val. Jan. 1, 1980.
[15] This rate will be converted to 7.2% ad val. Jan. 1, 1980.
[16] This rate will be converted to 5.9% ad val. Jan. 1, 1980.
[17] This rate will be converted to 8.6% ad val. Jan. 1, 1980.
[18] This rate will be converted to 9.2% ad val. Jan. 1, 1980.
[19] This rate will be converted to 16% ad val. Jan. 1, 1980.
[20] This rate will be converted to 8.5% ad val. Jan. 1, 1980.
[21] 682.41 and 682.45 are new items to be established Jan. 1, 1980, from part of existing item 682.40.
[22] 687.58 is a new item to be established Jan. 1, 1980, from part of existing item 687.60.
[23] 692.32 is a new item to be established Jan. 1, 1980, from part of existing item 692.27.
[24] 706.09 and 706.13 are new items to be established Jan. 1, 1980, from part of existing item 706.08.
[25] Existing item 706.11 will be renumbered as 706.16 on Jan. 1, 1980.
[26] Existing item 706.12 will be renumbered as 706.17 on Jan. 1, 1980.
[27] Existing item 706.14 will be renumbered as 706.18 on Jan. 1, 1980.
[28] Existing item 727.31 will be renumbered as 727.23 on Jan. 1, 1980.
[29] Existing item 727.32 will be renumbered as 727.25 on Jan. 1, 1980.
[30] 727.27 is a new item to be established Jan. 1, 1980, from part of existing item 727.37.
[31] 727.29 is a new item to be established Jan. 1, 1980, from part of existing item 727.37.
[32] Existing item 727.48 will be renumbered as 727.50 on Jan. 1, 1980.
[33] 732.21 is a new item to be established Jan. 1, 1980 from existing items 732.20 and 732.22.

[34] In conformance with the agreement between the United States of America and the Hungarian People's Republic, entered into on June 30, 1979, this item is amended to provide for whiskbrooms wholly or in part of broom corn valued not over 45 cents each.

[35] Item 772.51 is a "final list" article subject to the valuation provisions of section 402a of the Tariff Act of 1930. With adoption of the proposed new standards of valuation, the 4% ad valorem rate will be converted to 5.7%, the equivalent rate under the new standards. The 5.7% rate will be the converted rate used for calculating stages of reduction for the item.

EMBASSY OF THE UNITED STATES OF AMERICA,
Budapest, December 28, 1979.

Mr. JANOS NYERGES,
Special Representative of the Hungarian Government to the International Economic Organizations, Budapest.

EXCELLENCY: I have the honor to refer to the Agreement on Tariff Matters between the United States of America and the Hungarian People's Republic signed November 18, 1979.

I also have the honor to refer, to Associate Special Trade Representative William B. Kelly's letter of November 26, 1979, transmitting the revised schedule of U.S. concessions to be annexed to the agreement as annex I; and to your letter of December 10 transmitting the revised schedule of concessions of the Hungarian People's Republic to be annexed to the agreement as annex II.

Our two Governments have determined that a satisfactory overall balance of concessions has been achieved. Our two Governments have further agreed that the Agreement on Tariff Matters between the United States of America and the Hungarian People's Republic shall enter into force on January 1, 1980.

Accept, Excellency, renewed assurances of my highest esteem.

Sincerely,

PHILIP M. KAISER,
Ambassador.

HUNGARIAN PEOPLE'S REPUBLIC,
MINISTRY OF FOREIGN TRADE,
Budapest, December 28, 1979.

PHILIP M. KAISER,
Ambassador Extraordinary and Plenipotentiary, Embassy of the United States of America, Budapest.

EXCELLENCY: I have the honor to refer to the Agreement on Tariff Matters between the Hungarian People's Republic and the United States of America signed November 18, 1978.

I also have the honor to refer to Associate Special Trade Representative William B. Kelly's letter of November 26, 1979, transmitting the revised schedule of U.S. concessions to be annexed to the agreement as annex I, and to my letter of December 10, 1979, transmitting the revised schedule of concessions of the Hungarian People's Republic to be annexed to the agreement as annex II.

Our two Governments have determined that a satisfactory overall balance of concessions has been achieved. Our two Governments have further agreed that the Agreement on Tariff Matters between the Hungarian People's Republic and the United States of America shall enter into force on January 1, 1980.

Accept, Excellency, renewed assurances of my highest esteem.

Sincerely,

JANOS NYERGES,
Special Representative of the Hungarian Government to the International Economic Organizations.

Part 3.—Trade Agreement With the United Mexican States Entered Into on October 31, 1979

MÉXICO, D.F.,
October 31, 1979.

Lic. ABEL GARRIDO RUIZ,
Director General of International Trade Negotiations, Secretariat of Commerce, Palacío Nacional, México, D.F.

DEAR LIC. GARRIDO: I have the honor to refer to the recent negotiations between officials of our two Governments regarding tariff concessions to be exchanged between the United States of America and the United Mexican States as part of the multilateral trade negotiations.

In this regard, I have the honor to inform you that in expectation of the concessions to be made by the United Mexican States as part of its accession to the General Agreement on Tariffs and Trade, the United States of America agrees to reduce the duty on the following items:

Items		Percent	
		Base	Offer
473.52	Litharge	6.0	2.4
473.56	Red lead	8.6	3.4
624.02	Unwrought lead	5.2	3.5
624.03	Other lead	5.1	3.5

These concessions will be implemented at the fastest rate permissible under U.S. law, beginning on January 1, 1980.

Until the protocol of accession of the United Mexican States to the

General Agreement on Tariffs and Trade takes effect, the United States shall have the right to suspend or withdraw these concessions in whole or in part.

Sincerely,

STEPHEN H. ROGERS,
Counselor for Economic and Commercial Affairs.

SECRETARIAT OF COMMERCE,
Carmona y Valle 101 —4°,
México, D.F., October 31, 1979.

Mr. STEPHEN H. ROGERS,
Counselor for Economic and Commercial Affairs, American Embassy, Paseo de la Reforma 305, México 5, D.F.

DEAR MR. ROGERS: I have the honor to refer to your letter of today's date which reads as follows:

> DEAR ABEL: I have the honor to refer to the recent negotiations between officials of our two Governments regarding tariff concessions to be exchanged between the United States of America and the United Mexican States as part of the multilateral trade negotiations.
>
> In this regard, I have the honor to inform you that in expectation of the concessions to be made by the United Mexican States as part of its accession to the General Agreement on Tariffs and Trade, the United States of America agrees to reduce the duty on the following items:

Items		Percent	
		Base	Offer
473.52	Litharge	6.0	2.4
473.56	Red lead	8.6	3.4
624.02	Unwrought lead	5.2	3.5
624.03	Other lead	5.1	3.5

These concessions will be implemented at the fastest rate permissible under U.S. law, beginning on January 1, 1980.

Until the protocol of accession of the United Mexican States to the General Agreement on Tariffs and Trade takes effect, the United States shall have the right to suspend or withdraw these concessions in whole or in part.

Sincerely,

STEPHEN H. ROGERS,
Counselor for Economic and Commercial Affairs.

308-895 O - 80 - 4

I am happy to note my agreement with the contents of this letter.

Sincerely,

ABEL GARRIDO RUIZ,
Director General of
International Trade Negotiations.

Part 4.—Trade Agreement with the Socialist Republic of Romania Entered Into on March 2, 1979

EMBASSY OF THE UNITED STATES OF AMERICA,
Bucharest, Romania, March 2, 1979.

MR. CONSTANTIN FOTA,
Director, Ministry of Foreign and International Economic Cooperation, Bucharest, Romania.

DEAR MR. FOTA: Mindful of the Socialist Republic of Romania's status as a developing country, and in reference to the principle of special and differential treatment for developing countries, I have the pleasure to inform you that the Government of the United States of America agrees to the tariff concessions on those items listed in the attachment to this letter which are principally supplied to the United States by Romania. In addition to these tariff concessions negotiated bilaterally, Romania as a developing country will benefit from the tariff concessions granted by the United States to countries participating in the Tokyo Round of the Multilateral Trade Negotiations. A definitive list of these concessions will be made available as soon as the United States has completed final adjustments of its global offer in the light of negotiations currently being completed with a number of trading partners.

The United States wishes to express the mutual understanding that the extension of tariff concessions to Romania is contingent upon a successful conclusion of the Tokyo Round of the Multilateral Trade Negotiations.

Sincerely,

DOUGLAS W. MCMINN,
Executive Assistant to the
Deputy Special Trade Representative.

Attachment.

U.S. COMMITMENTS TO ROMANIA

Items Principally Supplied By Romania

TSUS No.	Description	Offer
306. 43	Camel hair, scoured	4. 2
363. 30	Sheets and pillowcases, not ornamented	7. 6
366. 75	Cotton damask furnishings, nes, not ornamented	7. 2
380. 0015	Mens and boys cotton knit play-, sun-suits, etc., ornamented	14. 0
380. 0036	Mens and boys cotton outerwear nes, knit, ornamented, etc	14. 0
380. 0660	Mens and boys cotton knit trousers, etc., not ornamented	16. 5
380. 33	Mens and boys cotton vests, not ornamented, not knit—not over $2	8. 0
382. 0270	Womens, girls, infants wool wearing apparel nes, not knit, ornamented	17. 0
382. 0411	Womens, girls, and infants knit culottes of manmade fiber, ornamented	17. 0
405. 45	Sodium benzoate	8. 2
407. 12	Salicylic acid and its salts	8. 7
407. 30	Antipyrine	7. 2
542. 31	Ordinary glass over 16 oz nov 28 oz sq ft, nov 40 united inches	6. 4
542. 33	Ordinary glass over 16 oz nov 28 oz sq ft, over 40 nov 60 united inches	7. 5
542. 35	Ordinary glass over 16 oz nov 28 oz sq ft, over 60 nov 100 united inches	8. 2
542. 44	Ordinary glass over 28 oz sq ft ov 2.2/3 nov 7 sq ft in	5. 4
546. 40	Glass smokers articles, nes, valued not over $1 each	9. 0

MINISTERUL COMERTULUI EXTERIOR,
SI COOPERARII ECONOMICE INTERNATIONALE,
Budapest, March 2, 1979.

Mr. WILLIAM CULBERT,
Acting Head of the U.S. Delegation to the MTN, 1–3 avenue de la Paix, 1202 Geneva.

DEAR MR. CULBERT: I am pleased to inform you that the Romanian authorities have studied with due attention the indicative list addressed by the United States to Romania, contained in document MTN/NTM/LL/3/Add.1, and are in the position to inform you the following:

1. Consistent with its policy of expanding trade and international economic cooperation, respecting the provisions of its protocol of accession to the GATT and seeking to participate in the general efforts to liberalize international trade, Romania will continue in the future to make efforts to increase and diversify its foreign trade, in-

cluding imports from GATT member countries, taking into consideration the benefits to be accorded Romanian exports.

2. It is the intention of Romania that in commercial transactions, a single exchange rate of the leu will be utilized. The objective in the future is to achieve convertibility of the leu.

3. The present tariffs for the remuneration of the Romanian citisens by representations of the foreign companies, correspond to the volume and the quality of the services performed by ARGUS and take into account the panel levels on international market.

4. At the request of the United States and other partner countries, the chamber of commerce and industry of Romania has published a guide of industrial centrals and major enterprises in Romania and distributed it free of charge. This guide is to be updated as necessary with changes in the nomenclature of Romanian industrial centrals and major enterprises.

5. Romania provides such data to the International Monetary Fund and IBRD, as well as to the GATT on occasions of consultations Romania has with the other contracting parties.

6. It is the intention of Romania to improve gradually information on foreign trade in terms of frequency and volume of data. The objective in the future is to distribute initially and ultimately to publish (when technical capabilities permit) more frequently foreign trade statistics with commodity by country and country by commodity information.

7. According to decree 15/1971, as amended and to decree 243/1977, foreign companies, their representations and foreign persons conducting business in the territory of the Socialist Republic of Romania can use, through contracts concluded with ARGUS, services of Romanian citizens or foreign citizens permanently residing in Romania.

In selecting the personnel to perform the requested services, ARGUS seeks persons of appropriate qualifications, taking into account also proposals made by foreign partners and presents then various choices to foreign partners, which are free to choose from the selected persons. In offering services to foreign companies, their representations or foreign persons, ARGUS consistent with its published regulations, will make its best efforts to ensure the selection of those persons indicated by foreign partners as being most qualified for the position in question.

Decree No. 243/1977 authorizes, beginning January 1, 1978, the conclusion of contracts providing services to foreign companies for their representations on a temporary basis. In case the requests for services are occasional or refer to a period of less than 30 days, a written contract is not compulsory.

8. At the request of the United States and other partner countries,

the chamber of commerce and industry of Romania has published a guide of Romanian research and design institutes and distributed it free of charge. The guide is to be updated as necessary with changes in the nomenclature of Romanian research and design institutes.

Romania, as a developing country, understands that, besides the tariff concessions for Romania agreed to by the United States in bilateral negotiations, it will also benefit from concessions on non-tariff measures not dealt with multilaterally and tariff concessions granted by the United States to countries participating in the Tokyo Round of Multilateral Trade Negotiations.

Romania wishes to express the understanding that the extention of its responses to the indicative list of the United States and of Romania's global offer in MTN is contingent upon a successful conclusion of the Tokyo Round of the Multilateral Trade Negotiations.

CONSTANTIN FOTA,
Director, Ministry for Foreign Trade and International Economic Cooperation.

OFFICE OF THE SPECIAL REPRESENTATIVE
FOR TRADE NEGOTIATIONS,
Washington, November 8, 1979.

Mr. CONSTANTIN FOTA,
Director, Ministry for Foreign Trade and International Economic Cooperation, Bucharest, Romania.

DEAR MR. FOTA: It is a pleasure to transmit to you, pursuant to the bilateral tariff agreement of March 2, 1979, between the Socialist Republic of Romania and the United States of America, the enclosed copy of the United States Schedule of Concessions (schedule XX) as appended to the tariff protocol of June 30, 1979, embodying the results of the Tokyo Round of the Multilateral Trade Negotiations.

With regard to the tariff concessions of the United States to the Socialist Republic of Romania, it is a pleasure for me to inform you that the U.S. concession on TSUS 306.43, "Camel Hair, Socured," has been improved to 2.4 percent ad valorem.

I would also like to take this opportunity to inform you of several technical changes to the U.S. tariff concessions to Romania. These changes are detailed in the enclosed copy of the U.S. schedule XX. Effective July 1, 1980, the following TSUS numbers will be renumbered:

Existing TSUS No.	*New TSUS No.*
405.45	409.38
407.12	410.66
407.30	410.76

Effective January 1, 1982, the following TSUS numbers will be renumbered:

Existing TSUS No.	*New TSUS No.*
380. 0015	379. 04
380. 0036	379. 04
380. 0660	379. 39
380. 33	379. 57
382. 0270	383. 16
382. 0411	383. 20

The U.S. concessions to Romania on these items will remain the same.

The tariff concessions of the United States to the Socialist Republic of Romania, as contained in the bilateral agreement of March 2, 1979, will be implemented in accordance with the provisions governing the implementation of comparable U.S. tariff concessions contained in the enclosed copy of the United States schedule XX.

Sincerely,

DOUGLAS W. MCMINN,
Executive Assistant to the
Deputy Special Trade Representative.

Enclosure.

Part 5.—Trade Agreement Between the American Institute in Taiwan and the Coordination Council for North American Affairs Entered Into on October 24, 1979

AMERICAN INSTITUTE IN TAIWAN,
Arlington, Va., October 24, 1979.

KONSIN C. SHAH,
Representative, Coordination Council for North American Affairs,
Washington, D.C.

DEAR MR. SHAH: I have the honor to refer to recent discussions concerning our bilateral trade. During those discussions, it was noted that as a result of the Tokyo Round trade negotiations, reductions in U.S. tariffs are expected that will benefit exports from Taiwan, and it was agreed that in consideration of these concessions, measures will be implemented in Taiwan that will benefit exports from the United States. This letter describes these reciprocal actions more fully.

It is understood that among the Tokyo Round concessions to be made by the United States and to be implemented domestically on a nondiscriminatory basis will be included certain tariff concessions which have been discussed among us and which are included in the

U.S. Schedule XX deposited with the GATT, a copy of which has been furnished to your delegation. Those tariff concessions enumerated in annex I to this letter will also be implemented in the United States on a nondiscriminatory basis. We understand that those items contained in the U.S. Schedule XX for which exports from Taiwan constituted 10 percent or more of total U.S. imports in 1976, as well as all articles described in annex I to this letter, have been considered in establishing the initial bilateral balance. It is further understood that the implementation in the United States of tariff concessions referred to in this letter will begin on January 1, 1980, in accordance with the staging schedules enumerated in annex I to the U.S. Schedule XX and as described in annex I to this letter.

In consideration of the implementation of the above action, we understand that all tariff and nontariff measure consessions previously offered affecting trade with the United States will continue in effect in Taiwan, and any concessions not yet implemented, with the exception of those items subject to deferred staging as enumerated in annex II, will be implemented as of Januray 1, 1980, in Taiwan. We note with satisfaction that the concessions concerning apples and automobiles have already been implemented.

With regard to tariff measures referred to in this letter, both sides shall have the same rights a GATT Contracting Party would have with respect to articles bound in the GATT for which it becomes or ceases to be a principal or substantial supplier.

We further understand that obligations substantially the same as those applicable to developing countries set forth in certain nontariff agreements concluded in the Tokyo Round will be obersved in Taiwan, i.e., the agreements on subsidies and countervailing measures customs valuation, licensing, government procurement, and technical barriers to trade as well as the provisions likely to be set forth in an agreement on commercial counterfeiting to be concluded. We expect that the benefits of several nontariff agreements concluded in the Tokyo Round, i.e., the agreements on subsidies and countervailing measures, customs valuation, licensing, government procurement, and technical barriers to trade as well as benefits likely to be set forth in an agreement on commercial counterfeiting to be concluded, will be extended in the United States to exports from Taiwan

It is understood that none of these concessions will be nullified or impaired by actions which would be inconsistent with the provisions of the General Agreement on Tariffs and Trade or the agreements referred to above. We believe that these assurances reflect commitments appropriate to Taiwan's stage of development.

We understand that discussions between the two sides will continue at a mutually convenient date, aimed at defining bilateral obligations

and an appropriate dispute settlement mechanism for matters falling within the purview of those nontariff agreements enumerated above.

We are confident that amicable adjustments will be made if necessary to insure that the bilateral undertakings described in this exchange of letters remain appropriately balanced.

Every effort will be made to consult through appropriate channels on any trade matters, including those covered by this letter.

It is further understood that both sides will consider favorably incorporating matters covered by this letter into other arrangements at an appropriate time.

Sincerely,

DAVID DEAN,
Chairman of the Board and Managing Director.

Tariff item Number	Brief product description	Base rate	Concession rate	Staging
126.71	Pepper seed	3¢/lb	Free	(1)
Ex. 138.50 [2]	Vegetables, fresh chilled or frozen sliced or reduced in size, nes ex frozen kidneybeans.	17.5%	9%	(1)
141.10	Beans, except soybeans in brine or packed in salt	0.7¢/lb	Free	(1)
141.20	Beans, except soybeans prepared or preserved, not in salt or brine.	3¢/lb on entire contents of container.	1.5¢/lb on entire contents of container.	(1)
141.30	Cabbage, prepared and preserved	8.5%	4%	(1)
141.70	Waterchestnuts, in salt, pickled otherwise preserved.	17.5%	7%	(1)
Ex. 141.81 [2]	Other vegetables, prepared or preserved other than packed in salt or brine; ex bamboo shoots in airtight containers, sweet ginger.	17.5%	9%	(1)
145.30	Nuts, edible, nes, not shelled	2.5¢/lb	1.3¢/lb	(1)
145.48	Peanuts, shelled or blanched	7¢/lb	3¢/lb	(1)
Ex. 145.60 [2]	Nuts, nspf, prepared or preserved other than shelled or blancehd ex canned litchi, canned longan.	28%	14%	(1)
147.30	Kumquats, packed in airtight containers	0.5¢/lb	0.25¢/lb	(1)
148.35	Melons, prepared or preserved	35%	17.5%	(1)
154.45	Pineapples, candied, crystallized or glace	8.5%	3.4%	(3)
Ex. 154.55 [2]	Fruit, candied, crystallized or glace, ex prunes, plums, mangoes, kumquats.	10%	5%	(1)
161.15	Cassia, cassia buds, and cassia vera, ground	1.5¢/lb	Free	(1)
161.19	Cinnamon and cinnamon chips, ground	1.5¢/lb	Free	(1)
182.11	Pastes, hash, puddings, etc., of vegetables and/or meat, fish, nes.	17%	8%	(1)
182.15	Bean cake, bean stick, miso and similar products	14%	7%	(1)
182.45	Thin soy sauce	6%	3%	(1)
Ex. 182.98 [2]	Edible preparations, nspf ex grass jelly, spring rolls, stuffed steamed bread dumplings, prepared watermellon seed.	10%	5%	(1)
184.65	Animal feed, nes, including offals prepared and preserved, inedible.	4%	2%	(1)
206.47	Wooden forks and spoons	8.5%	5.3%	(1)
222.50	Blinds, shutters, curtains	20%	8%	(1)
460.35	Geraniol	7.5%	3%	(4)
493.21	Natural camphor	2.4¢/per lb	Free	(1)
515.64	Stone and articles of stone	13.5%	6.9%	(1)

Footnote at end of table.

Tariff item Number	Brief product description	Base rate	Concession rate	Staging
545.21	Glass containers	11¢ per gross	Free	(3)
545.31	Glass inners for vacuum flasks	4¢ each plus 20% ad val.	1.6¢ each plus 8% ad val.	(1)
607.52 new number 606.39.	Ferrosilicon	1¢ per lb on silicon content.[5]	1.9%	(6)
646.04	Copper thumb tacks	8%	3.2%	(1)
646.80	Base metal padlocks	6¢ per doz plus 4% ad val.[7]	2.3%	(3)
648.57	Hoes and rakes and parts	7.5%	3%	(3)
649.71	Pens, knives with folds, blades	25%	10%	(1)
653.85	Iron or steel cast articles	4%	Free	(3)
654.1015 new number 654.07.	Aluminum cast cooking and kitchen ware	1.7¢/per lb plus 8.5% ad val.[8]	3.9%	(3)
696.35	Pneumatic craft	6%	2.4%	(1)
732.10	Bicycles	$1.50 each	60¢ each	(3)
734.51	Badminton equipment and parts	14%	5.6%	(1)
734.60	Croquet equipment and parts	8%	3.2%	(3)
737.70	Confetti, paper decorations	10%	4%	(1)
750.26	Whiskbrooms of broom corn	20%	8%	(1)
750.35	Feather dusters	7%	2.8%	(1)
760.65	Billiard chalk and tailors' chalk	5%	Free	(1)
771.05	Cellulose acetate waste and scrap	3.7¢/per lb	1.4¢/per lb	(4)
791.80	Leather articles, nspf, of reptile leather	14%	5.6%	(1)

[1] Duty reduction will be in annual stages equivalent to 3 percent ad valorem beginning Jan. 1, 1980, and continuing until the full-concessional rate is reached.

[2] A new item number will be established for these products.

[3] Duty reduction will be in eight equal annual stages beginning Jan. 1, 1980, with the full-concession rate becoming effective on January 1, 1987.

[4] The first stage of reduction shall become effective on the effective date for the United States of the Agreement on Implementation of article VII of the General Agreement on Tariffs and Trade, entered into on Apr. 12, 1979. The full-concession rate shall become effective upon the expiration of a period of 6 years and 6 months commencing with the effective date of the first-stage reduction. The second stage shall become effective upon the expiration of a period of 6 months commencing with the effective date of the first stage. During the full staging period, the amount of reduction from the base rate to the full-concession rate shall become effective in 8 equal stages, the last 7 of which shall be annual stages.

[5] Will be converted to 2.2% ad valorem.

[6] This concession will be implemented in one stage on Jan. 1, 1982.

[7] Will be converted to 5.7% ad valorem.

[8] Will be converted to 9.8% ad valorem.

COORDINATION COUNCIL FOR
NORTH AMERICAN AFFAIRS,
OFFICE IN U.S.A.,
Washington, D.C., October 24, 1979.

MR. DAVID DEAN,
Chairman of the Board and Managing Director,
American Institute in Taiwan, Arlington, Va.

DEAR MR. DEAN: I have the honor to acknowledge receipt of your letter of today's date, which reads as follows:

> DEAR MR. SHAH: I have the honor to refer to recent discussions concerning our bilateral trade. During those discussions, it was noted that as a result of the Toyko Round trade negotiations, reductions in U.S. tariffs are expected that will benefit exports

308-895 O - 80 - 5

from Taiwan, and it was agreed that in consideration of these concessions, measures will be implemented in Taiwan that will benefit exports from the United States. This letter describes these reciprocal actions more fully.

It is understood that among the Tokyo Round concessions to be made by the United States and to be implemented domestically on a nondiscriminatory basis will be included certain tariff concessions which have been discussed among us and which are included in the U.S. Schedule XX deposited with the GATT, a copy of which has been furnished to your delegation. Those tariff concessions enumerated in annex I to this letter will also be implemented in the United States on a nondiscriminatory basis. We understand that those items contained in the U.S. Schedule XX for which exports from Taiwan constituted 10 percent or more of total U.S. imports in 1976, as well as all articles described in annex I to this letter, have been considered in establishing the initial bilateral balance. It is further understood that the implementation in the United States of tariff concessions referred to in this letter will begin on January 1, 1980, in accordance with the staging schedules enumerated in annex I to the U.S. Schedule XX and as described in annex I to this letter.

In consideration of the implementation of the above action, we understand that all tariff and nontariff measure concessions previously offered affecting trade with the United States will continue in effect in Taiwan, and any concessions not yet implemented, with the exception of those items subject to deferred staging as enumerated in annex II, will be implemented as of January 1, 1980 in Taiwan. We note with satisfaction that the concessions concerning apples and automobiles have already been implemented.

With regard to tariff measures referred to in this letter, both sides shall have the same rights a GATT Contracting Party would have with respect to articles bound in the GATT for which it becomes or ceases to be a principal or substantial supplier.

We further understand that obligations substantially the same as those applicable to developing countries set forth in certain nontariff agreements concluded in the Tokyo Round will be observed in Taiwan, i.e., the agreements on subsidies and countervailing measures, customs valuation, licensing, government procurement, and technical barriers to trade as well as the provisions likely to be set forth in an agreement on commercial counterfeiting to be concluded. We expect that the benefits of several nontariff agreements concluded in the Tokyo Round, i.e., the agreements on subsidies and countervailing measures, customs valuation, licensing, government procurement, and technical barriers to trade as well as benefits likely to be set forth in an agreement on commercial counterfeiting to be concluded, will be extended in the United States to exports from Taiwan.

It is understood that none of these concessions will be nullified or impaired by actions which would be inconsistent with the provisions of the General Agreement on Tariffs and Trade or the agreements referred to above. We believe that these assurances reflect commitments appropriate to Taiwan's stage of development.

We understand that discussions between the two sides will continue at a mutually convenient date, aimed at defining bilateral obligations and an appropriate dispute settlement mechanism for matters falling within the purview of those nontariff agreements enumerated above.

We are confident that amicable adjustments will be made if necessary to ensure that the bilateral undertakings described in this exchange of letters remain appropriately balanced.

Every effort will be made to consult through appropriate channels on any trade matters, including those covered by this letter.

It is further understood that both sides will consider favorably incorporating matters covered by this letter into other arrangements at an appropriate time.

Sincerely,

DAVID DEAN.

I have the honor to inform you that the concessions and measures described in your letter with its annexes will be implemented in Taiwan.

Accordingly, your letter correctly reflects the understandings reached during the course of recent discussings concerning our bilateral trade.

Sincerely,

KONSIN C. SHAH,
Representative.

Part 6

Agreement with the Hungarian People's Republic Entered Into on June 13, 1979

EMBASSY OF THE UNITED STATES OF AMERICA

Bilateral Agreement Between the United States of America and the Hungarian People's Republic

The Government of the United States of America agrees to make best efforts to amend schedule 7, part 8, subpart A of the Tariff Schedules of the United States (TSUS) as follows:

(1) By striking out the superior heading for item 750.26 and inserting thereof "Valued not over 45¢ each."

It is understood by both parties to this Agreement that the aforementioned change requires Congressional approval and appropriate implementing legislation.

In return for this concession by the Government of the United States of America, the Hungarian People's Republic agrees to reduce current duty of 17.5 percent ad valorem on gas or smoke analysis apparatus (tariff No. 90.25–07) to 7 percent ad valorem.

Done in two original copies at Budapest, this thirteenth day of June 1979, two copies in English, each of the texts being equally authentic.

FOR THE UNITED STATES OF AMERICA

DOUGLAS W. MCMINN, *Executive Assistant to the Deputy Special Trade Representative.*

FOR THE HUNGARIAN PEOPLE'S REPUBLIC

JANOS NYERGES, *Special Representative of the Hungarian Government to the International Economic Organizations, Budapest.*

Customs Service Decisions

The following are decisions made by the U.S. Customs Service where the issues involved are of sufficient interest or importance to warrant publication in the CUSTOMS BULLETIN.

Dated: February 5, 1980.

HARVEY B. FOX,
Acting Director,
Office of Regulations and Rulings.

(C.S.D. 80-1)

Classification: Actual Use Provision; Substitution

Date: January 11, 1979
File: CLA-2:R:CV:MA
057110 E

DISTRICT DIRECTOR OF CUSTOMS,
Cleveland, Ohio.

SIR: This ruling is in connection with a request by counsel for (importer) as to the tariff status of knocked-down piston type engines, (CKD engine kits) withdrawn from a foreign trade zone through the port of Toledo.

Facts.—The importer purchases certain engine parts from English bulk part manufacturers which make up what is known as CKD kits. It is indicated that these CKD kits which are for use in the assembly of engines for agricultural tractors and machinery at this point constitute more than 50 percent of the engines. The importer also purchases many common bulk parts which are used in the production of industrial engines as well as agricultural engines. These common bulk parts are stated to comprise less than 50 percent of all engines assembled by the importer in the United States. The common bulk parts and the CKD kit parts are shipped to a foreign trade zone at the port of Toledo or via the port of Detroit directly to the importers' assembly plant. In the latter case the importer pays duty on the common parts. In the FTZ the parts are associated together in sufficient numbers to constitute so many engines which are withdrawn from the zone.

Upon withdrawal the unassembled engines are taken to the importer's plant and arrive at the plant with documents identifying the type of unassembled engine and a complete list of parts in the shipment. The pertinent immediate delivery number is correlated to the engines in the shipment. The receiving department at the plant establishes a record of the ID number and the number of engines associated with it.

The shipment is then moved across the plant to the warehousing area, called the "Tri-Az," an automated system. The components are entered into a computer inventory record by individual part number. The warehousing locator system is also based on part number. At the warehouse facility all shipments of agricultural and industrial engines are repalletized and inspected. Blocks are sent into a predetermined block storage area, and components of both the industrial and agricultural engines are sent into a central storage area. Components, including blocks, are then directed by the production control department to the production line to be assembled into engines having a specific parts list configuration. The importer's assembly parts requirement, which identifies a specific engine after it is built, has the identical number of components imported under the CKD kits. In this manner, all assembled engines which are installed in agricultural implements contain the identical number and type of components as were originally imported through the Toledo FTZ. However, in view of the commingling of the common parts in the central storage area before going to the production line, the engines produced and installed in agricultural implements are not the same engines withdrawn from the zone.

Issue.—Are the engines withdrawn from the FTZ entitled to free entry under item 660.40 TSUS, which provides for piston-type internal combustion engines to be installed in tractors of a type provided for in item 692.30 or in agricultural or horticultural machinery, or implements provided for in item 666.00, TSUS, upon compliance with the applicable customs regulations, or are the engines classifiable under item 660.42, TSUS, dutiable at the rate of 5 percent ad valorem. Specifically stated, the question is whether the actual use requirements of General Interpretative Rule 10(e)(ii), TSUS, can be satisfied by substitution.

Law and analysis.—In *J. E. Bernard & Co.* v. *United States*, volume 12, No. 25 Cust. Bull. 29, C.D. 4743, decided May 23, 1978, the court stated that General Interpretative Rule 10(e)(ii) and Customs regulations 10.133 make it clear than an actual use provision such as item 854.20 TSUS, is satisfied only (1) if such use is intended at the time of importation; (2) if the article is so used; and (3) if proof thereof is furnished within 3 years after the date the article has been entered.

Under the facts as presented, the engines intended to be used in agricultural implements are not the engines which are so used.

In a decision dated May 26, 1978 (ENT-01 R:E:E, 305832 M), headquarters considered the question of the legality of the substitution or interchange of duty-paid imports with imports of identical items entered as emergency war material under item 832.00, TSUS. In denying substitution, it was stated:

> Basically, you are requesting the substitution of merchandise of the same kind and condition so as to satisfy the various entry requirements. Headnote 1 of the TSUS provides that all merchandise imported into the United States from outside shall be subject to duty unless specifically exempted. With the exception of Public Law 95-159 dated November 8, 1977, which provides for the duty-free entry of Canadian petroleum received in exchange for domestic or duty-paid imported petroleum exported from the United States to Canada, there is no provision of Customs law which exempts a person from the payment of duty if he substitutes in its place merchandise of the same kind and condition. The Customs law is very specific as to when substitution of merchandise is permitted. For instance, 19 U.S.C. 1313(b) permits for drawback purposes the substitution of imported duty paid merchandise or domestic merchandise used in the manufacture of merchandise for export in place of imported merchandise of the same kind and quality as that used in the manufacture.

Holding.—The actual use provisions of General Interpretative Rule 10(e)(ii), TSUS, cannot be satisfied by substitution. Accordingly, the compression- and piston-type internal combustion engines are classifiable under item 660.42, TSUS and are not entitled to free entry under item 660.40, TSUS.

(C.S.D. 80-2)

Carrier Control: Use of Foreign Vessels to Transport Motor Fuel Antiknock Compound

Date: March 15, 1979
File: 103815
R:CD:C

This responds to your letters of October 4, 1978, and January 15, 1979, requesting a temporary waiver of the Jones Act (46 U.S.C. 883) to permit the use of foreign vessels to transport motor fuel antiknock compound from Pasadena, Tex., to Ponce, P.R.

The Department of Commerce (Commerce) has advised us that a competitor's barge may be available for use; alternatively, the present

use of portable equipment may be continued. Thus, Commerce objected to granting the waiver.

The Department of Energy (DOE) has advised that it would concur in the waiver if Commerce determines that a waiver is required to expedite the shipping of this compound. Commerce never determined that a waiver was required. In fact, it objected to granting the waiver.

The Department of Defense (DOD) has advised us that it does not perceive a significant adverse impact on our national defense in this matter. DOD states that it is unable to support the request for a waiver.

As you know, the Secretary of the Treasury's authority to waive compliance with the Jones Act is extremely limited and can be exercised only if "necessary in the interest of national defense" (act of December 27, 1950, 64 Stat. 1120). In view of the above advice, we are unable to determine that the waiver you requested is presently necessary in the interest of national defense.

(C.S.D. 80–3)

Classification: Mop Truck

Date: May 16, 1979
File: CLA–2:R:CV:MA
057820 JH

Your letter of January 19, 1979, requests the tariff status of a mop truck, product of Canada.

The mop truck is used by commercial office cleaners. It is a metal container, mounted on four wheels which enable it to be maneuvered about during the process of cleaning. These trucks have either a 30-gallon or a 50-gallon capacity. They measure 47 inches and 51½ inches in length, 16⅞ inches and 20½ inches in width, and 30¾ inches and 33⅞ inches in height, respectively. They are divided into two sections, one section appears to be a tank for holding cleaning solution with water, and the other section holds the wringer for extraction of dirty water.

It is your opinion that the mop trucks should be classifiable under the provision for machines not specially provided for, in item 678.50, Tariff Schedules of the United States (TSUS), and dutiable at the rate of 5 percent ad valorem.

Mop trucks in chief value of steel are classifiable under the provision for sanitary ware of base metal, in chief value of steel, not coated or plated with precious metal, and not enameled or glazed

with vitreous glasses, in item 653.94, with duty at the rate of 8.5 percent ad valorem. If in chief value of aluminum, the mop truck would be classifiable in item 654.10, TSUS, with duty at the rate of 1.7 cents per pound plus 8.5 percent ad valorem.

We have carefully reviewed the matter, and it is the opinion of this office that the record does not support a finding that these mop trucks are machines so as to make item 678.50, TSUS, applicable. In addition, mop trucks are not classifiable as vehicles, not self-propelled, in item 692.60, TSUS, as previously held in CIE 2024/64. Although wheels are attached, the wheels are more of a convenience for moving the equipment rather than having the person cleaning the floor carrying the articles by hand. CIE 2024/64 is modified accordingly.

(C.S.D. 80-4)

Generalized System of Preferences: Chemical Produced in One BDC From Components Imported From Another BDC

Date: May 18, 1979
File: R:CV:S JLV
055652

This ruling concerns the value-added requirement applicable to di-(2-ethylhexyl)phthalate (DOP) imported from Israel under the Generalized System of Preferences (GSP).

Issues.—Does DOP produced in Israel from raw materials imported from another beneficiary developing country (BDC) qualify for duty-free treatment under the GSP if it satisfies the 50 percent value-added requirement in section 503(b)(2)(B) of the Trade Act of 1974?

During the processing of the foreign materials into DOP, is an intermediate product created which is a "material produced in a beneficiary developing country" within the meaning of section 503(b)(2)(A)(i) of the Trade Act of 1974?

Facts.—Di-(2-ethylhexyl)phthalate (DOP) is produced in Israel from phthalic anhydride and alcohol, both of which are imported into Israel. The phthalic anhydride is imported from a country such as Romania, Turkey, or Yugoslavia which has been designated as a BDC for purposes of the U.S. GSP.

DOP is an ester produced by feeding alcohol (2-ethylhexanol) into a heated reactor and into which phthalic anhydride and a catalyst are added. The reactants are then heated to 155°–165° C. for approximately 4 hours during which the alcohol and anhydride chemically react to produce a monoester and then a diester and water. The water

308-895 O - 80 - 6

is withdrawn during the reaction. The resulting crude product is neutralized and washed to remove excess acidity and unreacted alcohol. A water layer is then separated from the neutralized crude product. Final processing includes stripping excess alcohol by preheating the product and feeding it to a continuous vacuum-operated steam stripping tower. After cooling, the final product is filtered to remove microsolid contaminants.

Law and analysis.—Among the statutory requirements for duty-free treatment under the GSP, an article must satisfy a value-added requirement. That is, the cost of materials produced in a BDC plus the direct costs of processing operations performed in a BDC must be not less than a certain percentage of the appraised value of the article. Section 503(b)(2) of the Trade Act of 1974 establishes two distinct value-added requirements. The first applies a 35-percent requirement to articles produced in one BDC. The second applies a 50-percent requirement to articles produced in two or more member countries of an association of countries which is treated as one country for purposes of the GSP.

Under the 50-percent value-added requirement an eligible article may qualify for duty-free treatment if the sum of (1) the cost or value of the materials produced in two or more countries which are members of the same association of countries which is treated as one country under section 502(a)(3), plus (2) the direct costs of processing operations performed in such countries is not less than 50 percent of the appraised value of such article at the time of its entry into the United States. Israel is not a member of such an association of countries designated for treatment as one country for purposes of preferential treatment under the GSP. Therefore, the 50-percent requirement is not applicable to articles imported from Israel under the GSP.

Articles from Israel are subject to the 35-percent requirement in section 503(b)(2)(A). The value of materials used in the production of an eligible article may be use to determine the 35-percent requirement only if the materials are products of Israel as defined in section 10.177 of the Customs regulations (19 CFR 10.177). The value of a foreign material, if a product of another BDC, is not includable in the 35-percent requirement for articles from Israel unless the material is substantially transformed in Israel prior to being used in the production of the eligible article.

During the production of DOP, the reaction of phthalic anhydride with alcohol produces a monoester and then the desired diester. In this case, the process is continuous and any intermediates are immediately esterfied with the remaining alcohol to produce DOP. The intermediate monoester is a defined compound in technical literature, and if isolated could be used in the production of a diester or a mixed

ester, depending on the nature of the alcohol used. However, there is no evidence that such a monoester is anything more than a transitional stage which is always reacted to completion of the DOP. The intermediate monoester is not traded in commerce, is relatively unstable, and is not economically isolated for trade. Therefore, we are of the opinion that the intermediate monoester is not a substantially transformed constituent material within the meaning of section 10.177(a) of the Customs regulations.

Holdings.—(1) The 50-percent value-added requirement under the GSP does not apply to articles imported from a BDC unless that country is a member of an association of countries which has been designated as one country for purposes of the GSP.

(2) The cost or value of the intermediate monoester, 2-ethylhexyl hydrogen phthalate, is not a material produced in Israel for purposes of the 35-percent value-added requirement if applied to DOP produced in Israel from the foreign materials of phthalic anhydride and 2-ethylhexanol.

(C.S.D. 80-5)

Aircraft: Applicability to Civil Aircraft of Fee Schedule for Specific Services Provided by Customs Officers

Date: September 13, 1979
File: AIR-1-1-R:CD:C
104069 PC

In your letter of June 25, 1979, you refer to a notice in the Federal Register, dated May 25, 1979, relating to a proposal by the Customs Service to amend title 19, Code of Federal Regulations, section 4.98(a), to increase the schedule of fees charged for specific services provided to vessels by Customs officers.

When this revised fee schedule becomes effective, you ask whether it will be legal under the authority of title 19, Code of Federal Regulations, section 6.10, for Customs inspectors to impose the revised fee schedule on commercial air carriers arriving at San Francisco International Airport.

Title 49, United States Code, section 1509(b)(3), provides that the Secretary of the Treasury is authorized by regulation to provide for the application to civil air navigation of the laws and regulations relating to the administration of the Customs laws to such extent and upon such conditions as he deems necessary.

Title 49, United States Code, section 1509(c), provides that the Secretary of the Treasury is authorized by regulation to provide for the application to civil aircraft of the laws and regulations relating to

the entry and clearance of vessels to such extent and upon such conditions as he deems necessary.

Pursuant to the above authority title 19, Code of Federal Regulations, section 6.10 provides that except as otherwise provided for in these regulations (part 6), aircraft arriving from contiguous foreign territory and the persons and merchandise, including baggage, carried thereon, shall be subject to the Customs laws and regulations applicable to vehicles arriving from the contiguous foreign territory; and aircraft and the passengers and merchandise including baggage, carried thereon, arriving from any other place, shall be subject to the Customs laws and regulations applicable to vessels so arriving, insofar as such laws and regulations are applicable to aircraft.

In view of the foregoing, it is our opinion that the Secretary of the Treasury is authorized to issue regulations applying to civil aircraft arriving from a country other than Canada or Mexico the fees provided by law in items 3, 4, 5, 6, and 8 set forth in the schedule in section 4.98(a) of the Customs regulations (19 CFR 4.98(a)).

(C.S.D. 80–6)

Classification: Traction Devices for Automobile Tires

Date: June 11, 1979
File: CLA–2:R:CV:MA
062029 E

In your letter of March 13, 1979, you ask that we review the tariff classification of (name) traction devices, a product of Norway.

Your client imported these traction devices through the Port of New York under entry No. 159415 of November 15, 1978, and they have been tentatively classified as articles of steel, not coated or plated with precious metal, other, in item 657.25, Tariff Schedules of the United States (TSUS). You contend that these traction devices are properly classifiable as parts of motor vehicles in item 692.27, TSUS.

The (name) is illustrated in the leaflet submitted as a tool or device composed of steel which is fitted to the tire of an automobile to provide traction. The device has four spokes or arms extending from the center or hub. These spokes have a length the approximate radius of the wheel and its tire, and are fashioned at the outer end to fit over the tire tread. By means of a mechanism in the center, the spokes can be adjusted so that the device grips the tire securely. The instructions to affix the device to the tire direct that the handle be tightened as far as it will go so that the grip is flush against the tire tread. The device is stated to be an emergency aid to get one out of snow or mud, and removal of the device is recommended as soon as the road is clear. The

device is sold in three sizes so as to fit 13-, 14-, and 15-inch tires. It is marketed or packaged in pairs.

We have considered the cases cited by you and find them factually distinguishable and inapplicable in principle to the (name) under consideration. Whether an article is a part for tariff purposes depends upon the nature of the article under consideration, and, to some degree, on the function and purpose of that article in its relation to the article to which it attaches or with which it is designed to serve, *Gallagher & Ascher Company* v. *United States*, 52 CCPA 11, C.A.D. 849 (1964).

Applying this principle to the (name), the function and purpose of these articles is to give traction to the tire. Therefore, if the (name) are parts for tariff purposes, they are parts of tires, not motor vehicles. Since there is no provision for parts of tires, they must be relegated to the basket provision for the material. (See T.D. 37356, 33 Treas. Decs. 206 (1917).)

The master rule in the construction of statutes is to so interpret them as to carry out the legislative intent. *American Rusch Corp.* v. *United States*, 74 Cust. Ct. 153, C.D. 4599 (1975). In the enactment of the Tariff Act of 1930, the Congress had before it the following data in the "Summary of Tariff Information," 1929, page 844, as to what constituted a part for tariff purposes, as distinguished from an accessory:

> Whether an article is an accessory or an integral part of a machine depends to a considerable extent upon its use. If its use is casual, auxiliary, or optional it is an accessory. If, however, it is used as an essential part, and if the machine is incapable of performing its ordinary and proper functions without it, it will be considered as least for tariff purposes, as an integral part of the machine. (16 Ct. Cust. Appls., 44, T.D. 42872).

The Tariff Schedules of the United States is the successor to the Tariff Act of 1930, and contains no data reflecting an intent to the contrary. General interpretative rules 10(e) and (ij), noted.

Applying the cited data from the "Summary of Tariff Information" to the (name), we find that their use is casual, auxiliary, or optional. Nor do we think the tires (or a motor vehicle or other self-propelled vehicle they may be used with) are incapable or performing their ordinary and proper functions without them. In addition, it would be our opinion that tires and motor vehicles are chiefly and invariably sold without (name).

Therefore, if we were to hold that (name) were parts, it would follow that we would also adopt the premise that tires and motor vehicles are chiefly and invariably sold without one of their parts, to wit, (name). This we are not prepared to do.

Accordingly, we concur in the proposed action by the Area Director of Customs, New York Seaport.

(C.S.D. 80-7)

Classification: Photomask Inspection System

Date: June 18, 1979
File: CLA-2:R:CV:MSP
058844 SF

This ruling concerns a photomask inspection system.

Facts.—The subject of the request for reconsideration is a photomask inspection system. It is a single entity described as consisting of the following components: TV X–Y scanning system, TV controller, monitor, and microprocessor, X–Y recorder, and magnetic card reader/writer.

The basic operation of the apparatus is as follows: A flying spot scanner, a set of two adjacent "projection" lenses, the X–Y moving table (upon which is fixed a photomask with various chips to be inspected), a set of two adjacent "condenser" lenses, and two photomultiplier tubes are arranged in sequence.

Within this sequential arrangement, each projection and condenser lens corresponds to one of the photomultiplier tubes; thus, there are two channels A and B. Furthermore, each projection lens is automatically focused on an adjacent chip, A or B, within the photomask. Signals coming through chip A from the flying spot scanner and a projection lense are converted into TV signals after having passed through the photomask, a condenser lens, and a photomultiplier tube. The signal coming through chip A is read by photomultiplier tube A and then amplified, and a magnified image is presented for inspection on monitor A. The same process occurs in channel B, and an image from chip B appears on monitor B. The photomask is moved along until all the chips have been inspected in this same fashion.

The two signals from channels A and B are then electronically compared so as to find differences between them, and these differences are interpreted as defects in the photomask chips. This comparison is made by the differential amplifier, which picks up any differing signals between channels A and B, amplifies them, and presents an image on monitor C. Differing signals are put into the microprocessor along with the corresponding X–Y positions. A printer is provided, and all defect information stored in the microprocessor can be printed out. Furthermore, these same differing signals are simultaneously fed into the X–Y recorder, which draws out a "defect map" on chart paper.

In addition to examining defects on the monitor screens, one can examine a defective chip by means of an attached microscope; first however, one must retrieve the defective chip information from the microprocessor and move the photomask to the exact position of the defective chip. This microscope may also be used to position the

photomask before the inspection begins. In short, the microscope has a setup or followup function; it cannot be used while the system is scanning. One can completely inspect the photomask without resort to the microscope.

In short, the microscope and the TV system, each containing optical elements, constitute two alternative means for inspecting defects. The TV system has dual sets of lenses which we refer to as projection lenses (those lenses between the flying spot scanner and the photomask fixed on the X–Y table) and the condenser lenses (those between the X–Y table and the phototube). The microscope contains optical elements as well. Also, there is an additional optical element, a mirror, which is used to switch from microscope to TV viewing.

Issue.—The issue is whether the article in question is classifiable under the provision for optical, electrical measuring, checking, analyzing, or automatically controlling instruments and apparatus, and parts thereof in item 712.05, Tariff Schedules of the United States (TSUS), with rate of duty at 25 percent ad valorem, or under the provision for other electrical measuring, checking, analyzing, or automatically controlling instruments and apparatus, and parts thereof, in item 712.49, TSUS, with rate of duty at 10 percent ad valorem.

In turn, this issue revolves around a subquestion: Whether or not the instrument meets the requirements for optical instruments, specifically, whether the optical elements of the system perform a dominant or primary function, and whether they aid human vision or create for inspection a picture or an image.

Law and analysis.—In order to qualify as an optical instrument, a "device must function in such a manner that employment of its optical features is dominant or primary as compared to the role of its other components," and the optical system of the instrument "must aid human vision or create for inspection a picture or image of some object." *Engis Equipment Co.* v. *United States*, 62 Cust. Ct. 29, 32, C.D. 3670 (1969).

The importer, referring to the microscope as if it contained the only optical elements of the system, contends that the microscope does not function in a dominant or primary way, and therefore, this fact precludes classification as an optical instrument.

With respect to the microscope alone, we agree with the importer's contention. According to the information which we have received, the microscope performs only a setup or a followup function. It is not used for the primary purpose of detecting defects, and it cannot be used while the system is inspecting for defects. Moreover, one can completely inspect a photomask without resort to the microscope.

The importer properly notes, "* * * the inclusion of a microscopic unit does not *ipso facto* render an instrument an optical instrument."

Engis, supra at 33, n. 4. Other decisions have reached a similar conclusion. *See, e.g.*, T.D. 70–115(5) (1970) (Microspectrophotometer used for analysis of microscopic objects by means of a light source and a photoelectric cell, with electrical energy, control, recorder, and microscope used merely to locate specimens, classifiable * * * in item 712.49, TSUS). *See also*, T.D. 70–223(7) (1970).

From the same passage of the *Engis* case, the importer quotes:

> * * * the presence of a microscopic unit is itself not crucial. What is crucial is whether the employment of the microscopic And Other Optical Units is primary or dominant as compared to the role of the other components (our italic added).

Engis, supra at 33, n. 4. While this microscope does not function in a dominant or primary way, we must examine the function of the other optical elements in the system, i.e., the dual lens systems mentioned earlier.

The primary purpose of this system is to discover defects in photomasks. Here, the creation of an image of the photomasks for inspection by means of the optical elements in the TV system serves the purpose for which the system is designed. Based on the information before us, the function of storing defects for use in a later repair process is a secondary function. *Compare, United States* v. *Americian Machine & Metals, Inc.*, 29 C.C.P.A. 137, C.A.D. 183 (1941) (Held: The measurement by means of optical elements (a microscope) is not the primary purpose for which a metal hardness tester was designed; the article not only creates the indentation to be measured, but to render the optical measurement of any value, the factors of the amount of load and the rate of loading must be considered and weighed, and these are accomplished without the use of any optical instrument. From this the court concluded that it could not be said that the dominant or primary use of the article lies in employment of the optical elements, and thus the article was not an optical instrument. We add that we find the instrument in the present case distinct from that in *American Machine* in both its use and principles of operation.).

The importer also asserts that "the lenses of the TV system function solely in the closed-circuit TV system, and therefore do not interact with the human eye." We do not agree with this statement. Vision is directly employed: Through the use of the lenses, the ultimate result is an enlarged image of the photomask for inspection on a screen. *See, United States* v. *Bendix Corp.*, 57 Cust. Ct. 184, C.D. 2759 (1966); *Clara M. Ferner* v. *United States*, 23 C.C.P.A. 62, 67, T.D. 47735 (1935).

Conclusion.—Accordingly, on the facts of this case, the photomask inspection system has optical elements which function in a dominant

manner and aid the eye in vision, and therefore must remain classifiable under the provision for optical instruments in item 712.05, TSUS, with rate of duty at 25 percent ad valorem.

(C.S.D. 80-8)

Classification: Unfinished Footwear

Date: June 19, 1979
File: CLA-2:R:CV:MA
057259 c

This ruling concerns the tariff classification of unfinished footwear.

Facts.—In its condition as imported the merchandise is a corduroy, closed toe, closed back bedroom slipper lasted to a cardboard insole. After importation a rubber outsole is cemented on to complete the shoe. The shoe in its condition as imported does not contain 10 percent by weight of rubber or plastics.

The inquirer maintains that the sample in its condition as imported is unfinished footwear pursuant to general headnote 10(h), Tariff Schedules of the United States (TSUS), which provides that "unless the context requires otherwise, a tariff description for an article covers such article, whether assembled or not assembled, and whether finished or not finished."

It is the inquirer's position that the sample unfinished shoe is precluded from classification under item 700.60, TSUS, inasmuch as it does not contain at least 10 percent by weight of rubber or plastics.

As support for this position he cites the well-known principle that merchandise is classifiable in its condition as imported.

The inquirer claims that the sample unfinished shoe is classifiable under the provision for other footwear in item 700.85, TSUS, and dutiable at the rate of 12.5 percent ad valorem. In the alternative he suggests classification under the provision for other articles not specially provided for, not ornamented, of cotton, of pile or tufted construction, corduroy in item 386.20, TSUS, with duty at the rate of 35 percent ad valorem.

The inquirer asks that if the footwear is held to be classifiable under item 700.60, TSUS, that we consider whether there is an American selling price for the merchandise. He maintains that there can be no American selling price for the footwear because footwear is not freely sold or offered in this country in a condition comparable to which the footwear in issue is imported, i.e., without a sole. Citing the case of *United States* v. *Alatary Mica Co.*, 19 CCPA 30, T.D. 44871 (1931) he contends that any method of appraisement based on de-

308-895 O - 80 - 7

ducting the appraised value for the outer sole from the American selling price of a completed slipper which is comparable to the imported merchandise is entirely without statutory warrant.

Issue.—Is the sample unfinished shoe precluded from classification under item 700.60, TSUS, because it does not contain at least 10 percent by weight of rubber or plastics.

Law and analysis.—Item 700.60, TSUS, provides for other footwear which is over 50 percent by weight of rubber or plastics or over 50 percent by weight of fibers and rubber or plastics with at least 10 percent by weight being rubber or plastics and having uppers of which not over 90 percent of the exterior surface area is rubber or plastics. The applicable rate of duty is 20 percent ad valorem.

Schedule 7, part 1, subpart A, headnote 3(b), TSUS, provides that "subject to the provisions of section 336(f) of this act, the merchandise in item 700.60 shall be subject to duty upon the basis of the American selling price, as defined in section 402 or 402a of this act, of like or similar articles manufactured or produced in the United States."

We agree based on previous administrative rulings that the sample is unfinished footwear within the intendment of general headnote 10(h), TSUS.

It is our view that general headnote 10(n), TSUS, is in its essence prospective. A proper application of this headnote requires us to consider what an item will become in terms of its ultimate use or construction. It would appear illogical to consider "condition as imported" as controlling for the weight breakdown but not for the determination of the essential nature of the footwear.

We note that with respect to the instant footwear that while other forms of completion are technologically possible, the only commercial feasible method of completion will result in footwear which as completed will be over 10 percent by weight of rubber and plastics and meets all the other requirements for classification under item 700.60, TSUS. Consequently, it is our position that unfinished footwear represented by the sample is properly classifiable under item 700.60, TSUS.

We do not believe that with respect to the applicability of the American selling price basis of valuation to the instant footwear that the *Alatary* case, supra, is applicable, inasmuch as that case had reference to determination of export or foreign value.

Section 402a(g), Tariff Act of 1930, as amended, provides "the American selling price of any article manufactured or produced in the United States shall be the price, including the cost of all containers and coverings of whatever nature and all other costs, charges, and expenses incident to placing the merchandise in condition packed ready for delivery, at which such article is freely offered for sale for domestic consumption to all purchasers in the principal market of the

United States, in the ordinary course of trade and in the usual wholesale quantities in such market, or *the price that the manufacturer, producer, or owner would have received or was willing to receive* for such merchandise when sold for domestic consumption in the ordinary course of trade and in the usual wholesale quantities, at the time of exportation of the imported article" [italic supplied].

Noting the above we are prepared to seek a willing price upon importation. There are probably similar items at comparable stages of completion made in the United States. However, we will not attempt to make the special request for information from the American makers to establish a willing price unless, and until, we are notified of actual importation of this merchandise.

Holding.—Footwear represented by the sample is dutiable at the rate of 20 percent ad valorem under item 700.60, TSUS.

(C.S.D. 80–9)

Classification: Inclusion of Bottom Bracket Assembly in "Cotterless Type Crank Set"

Date: June 19, 1979
File: CLA-2:R:CV:MA
057836 C

This ruling sets forth the definition of a "cotterless type crank set" for tariff purposes.

Facts.—The inquirer maintains that a "cotterless type crank set" classifiable under item 912.10, of the appendix to the Tariff Schedules of the United States (TSUS) consists of the following:

2 cranks arms (cotterless),
Chain wheels which will attach to the crank arms,
Bolts which attach the chain wheels to the arms,
Bottom Bracket (cotterless) which will attach the 2 crank arms.

It has been the position of this office based on legal determination 3611–458 dated September 12, 1978, that a "cotterless type crank set" consists of the right cotterless crank permanently attached to either a single, double, or triple chain wheel plus the left crank. The bottom bracket assembly consisting of a cupset with lockring and ball bearings, and bottom bracket axle with bolts and washers was not considered as part of a "cotterless type crank set."

Issue.—Whether the bottom bracket assembly is included within the definition of a "cotterless type crank set."

Law and analysis.—Item 912.10, TSUS, provides for free entry of "cotterless type crank sets."

A study of the legislative history relating to the merchandise

covered by item 912.10, TSUS, provides no insight on what Congress intended should be encompassed by the term "cotterless type crank sets."

Information before us from the trade is that crank sets are sold and purchased in varying degrees of completeness. However, when questioned as to what constitutes a complete cotterless or cottered type crank set most of the trade would include the bottom bracket assembly.

It is our view that the common trade understanding of what constitutes a "cotterless type crank set" includes the bottom bracket assembly. Furthermore, it appears to us that the bottom bracket assembly to which the crank arms are attached should be considered an essential component of the "cotterless type crank set."

Holding.—"Cotterless type crank sets" which are classifiable under item 912.10, TSUS, include the following:

Right and left crank arms,
Chain wheels,
Spacers and chain wheel fixing bolts,
Bottom bracket assembly consisting of cupset with lockring and ball bearings, and bottom bracket axle with bolts and washers.

(C.S.D. 80-10)

Country of Origin: Garments Assembled in One Country From Parts Produced in Another Country

Date: June 19, 1979
File: CLA-2:R:CV:MC
059089 PR

This ruling concerns the country of origin of knit sweaters and cardigans.

Issue.—The issue presented is whether the assembly of a sweater and a cardigan from their unassembled parts results in a change in the country of origin of those garments for tariff and marking purposes.

Facts.—Sweater and cardigan parts are to be knit in Taiwan from Taiwanese wool, and shipped to Hong Kong. Samples were submitted representing the merchandise in its condition as it enters Hong Kong. The sweater has five parts consisting of two sleeve panels, a neck piece, and front and back panels. The cardigan has six parts consisting of two front panels, a back panel, two sleeve panels, and a placket.

In Hong Kong, the following processes will be performed:

1. The front panel(s) will be sewn to the back panel.

2. The placket or neck piece will be sewn to the panels which have been joined.

3. The sleeves will be sewn closed and sewn to the armholes formed by the joining of the front and back panels.

4. Some trimming of fabric will be done to complete processes 1, 2, and 3.

5. In the case of the cardigan, buttons of Hong Kong origin will be affixed to the placket (due to a discrepancy between the submitted sample and a statement made on page 2 of the inquiry, it is unclear whether the buttonholes will be formed in Taiwan or Hong Kong).

6. Labels will be attached to the finished garments.

7. The garments will be washed, pressed, and packed for export to the United States.

Law and analysis.—Merchandise which has been processed in two or more countries is considered for tariff purposes to be a product of the last country in which the processing created a new and different article. *Anheuser-Busch* v. *United States*, 207 U.S. 556 (1907).

A number of factors may be considered in determining whether a particular process results in the creation of a new and different article. A major consideration is whether a new use results from the processing, and the degree of change from any former use. *Amity Fabrics Co., Inc.* v. *United States*, 43 Cust. Ct. 64, C.D. 2104 (1959). Another consideration is the amount of processing performed in each country and whether the processing results in an article having a new identity. *Roland Freres, Inc.*, v. *United States*, 23 CCPA 81, T.D. 47763 (1935). *John J. Coates* v. *United States*, 3 Cust. Ct. 193 (1939).

Turning to the instant inquiry, it appears that a substantial amount of processing is performed in Hong Kong. None of the parts exported from Taiwan resemble or possess the character of the completed articles nor can they be identified or named as the completed articles in their unfinished state. This is not to say, however, that all assembly operations will result in a change in the country of origin of the assembled article. The determination in each such instance will be made based on the principles expressed by the courts as applied to the facts presented.

In the instant situation, while all the components which account for the complete sweater or cardigan are produced in Taiwan and the unassembled garments would have the same tariff classification as the finished articles if imported into the United States together, this is not determinative of the country of origin of that merchandise. In *Doliff & Company, Inc.* v. *United States*, —— Cust. Ct. ——, C.D. 4755 (July 7, 1978), the court stated that although certain processing did not result in a change in the tariff classification of the merchandise concerned, the processing did create a new and different article.

Holding.—Based on the above, the assembly of the garments' parts in Hong Kong results in the creation of new and different articles and therefore, Hong Kong is the country of origin of those articles for tariff purposes (including marking).

Effect on other rulings.—In Internal Advice Request No. 24/77 (049912, April 1, 1977), the Customs Service held that the country of origin of imported merchandise for duty purposes should be determined at that point within the manufacturing process where the merchandise first becomes susceptible to its final tariff classification, whether assembled, finished, not assembled, or not finished, and at that point in time where the subsequent further processing does not result in a change in the tariff classification of the merchandise.

In accordance with C.D. 4755, that ruling is modified to reflect the position that the country where merchandise first becomes susceptible to its final tariff classification is a factor for consideration and not determinative in ascertaining the country of origin of that merchandise.

In a headquarters ruling dated June 6, 1978, 056711, it was held that if sandal components from Taiwan are made into finished sandals in Hong Kong, Taiwan would be considered the country of origin for tariff purposes if all the components arrived in Hong Kong in the same shipment. However, if the components are shipped in any other manner and processed in Hong Kong as described in that ruling, Hong Kong would be considered the country of origin. The primary consideration in that ruling that a new and different article was created in Hong Kong was the amount of processing that took place there (sewing, glueing, and adhesion baking of components). In accordance with section 177.9(b), Customs Regulations (19 CFR 177.9(b)), our ruling of June 6, 1978, is modified to reflect that where all component parts of an article are produced in Taiwan, that is a factor which may properly be considered in determining the country of origin of that article.

It does not matter how or when the various components of the article arrived in the second foreign country. The determination in that ruling that the amount of work performed in Hong Kong results in the creation of a new and different article is unchanged and, in accordance with this modification, Hong Kong remains the country of origin of the merchandise regardless of the manner of shipment.

(C.S.D. 80–11)

Carrier Control: Application of U.S. Laws to a Site on the Outer Continental Shelf After Removal of an Exploratory Rig

Date: June 20, 1979
File: VES–3–15–R:CD:C
104005 JL
104023

This is in reference to your letter of May 18, 1979, in which you ask that Customs reverse its earlier rulings in regard to transportation of

merchandise for hire to offshore drilling sites on the American Continental Shelf by foreign-flag vessels.

You state that a Dutch-flag vessel, A, launch barge (number), which is working in conjunction with the derrick vessel B, will carry jackets and platform sections to a site on the Continental Shelf. You state that the B is at present moored or anchored at that site.

You outline the sequence of events leading up to the participation of the B and the A at the subject site as follows:

> First, an exploratory rig has been on site, either a jackup or semisubmersible. They were *attached* to the shelf, drilling in the search for oil. At this point, it is clearly a port in the United States.
>
> Oil is discovered. The discovered well is blanked off, but a huge sub-sea completion remains on the site. The drilling rig clears the site for the preparation of laying the jacket and building the platform.

You continue:

> Should this *now* important location, containing oil, lose its character as a port in the United States and foreign units enter to build and reestablish the area firmly as a port of the United States once more?
>
> We think not. Especially in view of the congressional interest firmly outlined in the Outer Continental Shelf Act amendments of 1978. Such amendments were enacted after Customs' earlier rulings.

Concerning the A, you state:

> However, we do object to the A, as it is clearly designed for freight carriage. They allegedly will be permitted to do so, contrary to the provisions of the Jones Act, on the basis of earlier Customs' rulings dating back to as early as the 1950's, stating that a foreign vessel clearing for international waters *would* not be considered engaged in coastwise trade.
>
> This is much further complicated by Customs' rulings that objects or structures, *attached* to the U.S. Continental Shelf are ports or places within the jurisdiction of the United States.

We believe that the Customs rulings you refer to are those which are based on an abstract of a ruling which was published at TD-54231(l), holding as follows:

> Under section 4 of the Outer Continental Shelf Lands Act of August 7, 1953 (43 U.S.C. 1333), the Customs and navigation laws, including the coastwise laws, the laws on entrances and clearances of vessels, and the provisions for dutiability of merchandise, are extended to mobile rigs during the period when they are secured to or submerged onto the seabed of the Outer Continental Shelf for drilling operations. The transportation of merchandise between a point in the United States and a rig so located is a coastwise transportation subject, among other things, to the penalty provisions of section 883, title 46, United States

> Code. A foreign vessel may not engage in such transportation but is not prohibited from transporting merchandise directly to the rig from a foreign port or place if permission to do so is secured in accordance with the provisions of section 447 of the Tariff Act of 1930.

If we understand your position correctly, you maintain that once drilling for oil is commenced by an exploratory rig which was attached to the shelf, that site, from that time forward, should be considered "part of the United States," that is, a geographical point in U.S. waters for purposes of the coastwise laws, and that the subsequent removal of the rig would not change its status.

The section of the Jones Act pertinent to the present case is 46 U.S.C. 883. What the act prohibits is the transportation of merchandise in a noncoastwise-qualified vessel (which any foreign-flag vessel would be) for any part of its transportation between coastwise points. A coastwise point is a point within the 3-mile limit of U.S. territorial waters. Our only authority for the extension of the coastwise laws to include a point on the Outer Continental Shelf beyond the 3-mile limit is found in section 333(a)(1) of the Outer Continental Shelf Lands Act (43 U.S.C. 1333(a)(1)). Prior to the enactment of Public Law 95–372 (the 1978 amendments to which you refer), it stated in pertinent part:

> The Constitution and laws and civil and political jurisdiction of the United States are extended to the subsoil and seabed of the Outer Continental Shelf and *to all artificial islands and fixed structures which may be erected thereon* for purposes of exploring for, developing, removing, and transporting resources therefrom, to the same extent as if the Outer Continental Shelf were an area of exclusive Federal jurisdiction located within a State. [italic supplied.]

Section 203 of Public Law 95–372 amended section 1333(a)(1) of the act by striking out "and fixed structures" and substituting "and all installations and other devices permanently or temporarily attached to the seabed," and by striking out "removing, and transporting resources therefrom" and substituting "or producing resources therefrom, or any such installation or other device (other than a ship or a vessel) for the purpose of transporting such resources."

We think it clear from the above that the laws of the United States do not extend, pursuant to section 1333(a)(1), to mobile rigs or other structures during the period when they are not secured to, or submerged onto, the seabed of the Outer Continental Shelf for drilling operations, and that the enactment of Public Law 95–372 has not altered that principle. In fact, it appears to us that the 1978 amendment further supports our position. In regard to the specific factual situation you outline, the law is now quite explicit in excluding ships and vessels from any classification as fixed structures thereunder.

We have carefully considered your position in this matter but conclude that the clear language of the Outer Continental Shelf Lands Act, as amended, precludes us from reversing our earlier rulings.

(C.S.D. 80-12)

Country-of-Origin Marking: Merchandise Imported From the People's Republic of China

Date: June 20, 1979
File: MAR-2-05-R:E:E
710338 AH

Issue.—Whether China is an acceptable form of country-of-origin marking for goods imported from the People's Republic of China.

Facts.—A schematic drawing submitted by an importer indicates that the importer proposes to make kitchen utensils with the word "China" instead of "People's Republic of China." The schematic shows no other markings on the utensils.

Law and analysis.—Section 304 of Tariff Act of 1930, as amended (19 U.S.C. 1304) requires that every article of foreign origin (or its container) imported into the United States shall be marked in a legible and conspicuous manner to indicate the English name of the country of origin to the ultimate purchaser in the United States, with certain exceptions.

Holding.—The Customs Service issued a circular in 1971 (MAR 1-RM, October 1, 1971), indicating that the marking "China" would also be acceptable for marking goods imported from mainland China for the purposes of 19 U.S.C. 1304, in addition to "People's Republic of China." Accordingly, the proposed marking meets the requirements of 19 U.S.C. 1304.

(C.S.D. 80-13)

Reliquidation: Erroneous Exportation of Merchandise From Warehouse Due to Proprietor's Failure To Follow Instructions

Date: June 22, 1979
File: ENT-1-01-R:E:E
710384 M

This ruling concerns a request for the reliquidation of a consumption entry originally filed for smoked clams, because of an erroneous exportation of such merchandise.

Facts.—A warehouse proprietor in Norfolk, Va., maintains a warehouse in which only a section of the warehouse is Customs bonded, whereas the remainder of the warehouse contains duty piad merchandise.

308-895 O - 80 - 8

An importer stores in that warehouse the merchandise he intends to export in the Customs bonded section and the remainder of his merchandise in the warehouse proprietor's duty paid area after entry has been made and duty deposited.

In September and October 1978, the importer notified the warehouse proprietor that the importer needed a total of 156 cases of oysters and 68 cases of smoked clams from the Customs bonded section for transportation in bond to Bayonne, N.J., for exportation to Rotterdam. On both occasions, the importer's customhouse broker only filed a warehouse withdrawal for transportation and exportation of the cases of oysters. When the bonded carrier arrived at the warehouse on October 2 and again on November 14, to transport the merchandise in bond, the warehouse proprietor's employees neglected to follow the instructions of the importer because the warehouse withdrawals filed by the broker only mentioned the oysters. Therefore, only the cases of oysters were removed from the Customs bonded section, whereas the cases of smoked clams were removed from the duty paid area.

Issue.—Because of the error involved, is the importer entitled to a refund of the duties originally paid for the 68 cases of smoked clams?

Law and analysis.—19 U.S.C. 1520(c)(1), in pertinent part, provides that the district director may reliquidate an entry to correct a clerical error, mistake of fact, or other inadvertence not amounting to an error in the construction of law.

We believe that the failure to follow the importer's instructions because of the broker's incomplete warehouse withdrawals was due to a misunderstanding on the part of the warehouse proprietor as to the intention of the importer and was therefore a mistake of fact or inadvertence within the meaning of 19 U.S.C. 1520(c)(1).

Holding.—Failure to follow the importer's explicit instructions concerning the removal of the merchandise was a mistake of fact or inadvertence within the meaning of 19 U.S.C. 1520(c)(1). Therefore, the original consumption entry filed for the 68 cases of smoked clams should be reliquidated and refund of duties paid on such clams is thereby warranted.

(C.S.D. 80-14)

Articles Exported and Returned Under Item 806.30, TSUS: Whether that Cost of a Die Forms Part of the Dutiable Value of Processing Performed Abroad

Date: June 25, 1979
File: R:CV:V
541954 RP

This is in reference to your letter of April 3, 1979, on behalf of (an American manufacturer), concerning the cost elements that must be

included in the valuation of certain investment shell castings imported from Canada under item 806.30, Tariff Schedules of the United States (TSUS). It is your contention that for purposes of item 806.30, TSUS, the dutiable value of the imported castings does not include the cost of tooling in the form of a "die." This die is manufactured in Canada from blueprints furnished by the U.S. purchaser of your client's merchandise.

Item 806.30, TSUS, provides:

> Articles returned to the United States after having been exported to be advanced in value or improved in condition by any process of manufacture or other means:
>
> Any article of metal (except precious metal) manufactured in the United States or subjected to a process of manufacture in the United States, if exported for further processing, and if the exported article as processed outside the United States, is returned to the United States for further processing.
>
> A duty upon the value of such processing outside the United States (see headnote 2 of this subpart).

The method of determining the cost or value of the processing abroad is set forth under headnote 2(a), subpart B, part 1, schedule 8, TSUS, which states:

> (2) *Articles repaired, altered, processed, or otherwise changed in condition abroad.*—The following provisions apply only to items 806.20 and 806.30:
>
> (a) The value of the repairs, alterations, processing, or other change in condition outside the United States shall be—
>
> (i) the cost to the importer of such change; or
>
> (ii) if no charge is made, the value of such change,
>
> as set out in the invoice and entry papers; except that, if the appraiser concludes that the amount so set out does not represent a reasonable cost or value, then the value of the change shall be determined in accordance with section 402 or 402a of this act.

It is evident from this headnote that the preferred basis of valuation is the cost to the importer of the change in condition. If no charge is made, then the value assigned by the processor as set out in the invoice and entry papers is to be used. Only if the appraising officer concludes that the amount set out in the invoice and entry papers does not represent a reasonable cost or value, is he required to determine the cost or value in accordance with the provisions of section 402 or 402a, Tariff Act of 1930, as amended.

In addition, under item 806.30, TSUS, the reasonable cost of processing contemplates the inclusion of both direct and indirect costs of a processing operation, with the exception of domestically incurred assist costs as provided in section 10.9(1) of the Customs

regulations. *United States* v. *Douglas Aircraft* 62 CCPA 53, C.A.D 1145 (1975).

In support of your contention that the cost of the Canadian-manufactured die does not form part of the dutiable value of the subject castings under item 806.30, TSUS, you cite the case of *National Tube Company* v. *United States*, R.D. 8107 (1952). In *National Tube*, repairs were made in Canada to certain steel pipe exported from the United States for that purpose. The Canadian stretching machine was adapted to do the job by the addition of specially designed grip jaws and plugs. The court held that the cost of the grip jaws and plugs was not a part of the cost of the repairs, and therefore, not dutiable. The court reasoned that the value of the stretching machine itself was not a part of the value of the repairs, and, therefore, the value of the special parts supplied to adapt the machine was not a part of the value of the repairs. However, the court went on to state:

> A charge for the use of the stretching machine, which would necessarily include a charge for the installation and use of the parts specially designed to hold the casing while being stretched, would enter into such value.

This statement clearly authorizes the inclusion of an indirect cost, "a charge for the use of the stretching machine," in the value of the processing performed abroad.

It should be noted that in the more recent *Douglas Aircraft* case, *supra*, the Court of Customs and Patent Appeals held that the cost of certain tooling made in Canada and furnished free of charge by Douglas Aircraft to its Canadian subsidiary was includible in the value of processing performed in Canada under the provisions of item 806.30, TSUS. In its decision the C.C.P.A. stated:

> (T)here is nothing in the legislative history to indicate that, when Congress provided, commencing with the 1954 [Customs Simplification] Act, for "cost" or "reasonable cost" in determining the "value" of processing, there was any intention that "cost" be interpreted other than according to sound business practice. *Thus the cost of processing would include both direct and indirect costs.* [Italic added.]

Accordingly, we interpret the *Douglas* case to mean that all elements that would normally enter into a calculation of the charge for performing a processing function must be included to establish a reasonable cost, except as noted in section 10.9(1) of the Customs regulations. Thus, based on the information you submitted, it is our opinion, in this particular case, that in addition to direct labor and materials, the cost of the Canadian manufactured die must be included in the cost of processing for the subject investment castings under the provisions of item 806.30, TSUS.

(C.S.D. 80–15)

Country-of-Origin Marking: Dental Surgical Instruments Exported and Returned

Date: June 25, 1979
File: MAR–2–05:R:E:E
709838 HS

This ruling concerns country-of-origin markings on surgical dental instruments.

Issue.—Whether surgical instruments consisting of English-made components machined in the United States and finished in Pakistan may be marked "Made in U.S.A."

Facts.—Forged stainless steel instrument blanks are made in England. They are then imported into the United States for further processing consisting of machining the blanks to impart new and different characteristics to the metal. The forged machined blanks are then exported to Pakistan for manual finishing, polishing, assembly, and final passivation for corrosion resistance and shipping. The cost of the forged blanks from England is estimated to be 22.4 percent of the total cost of the instruments, the U.S. manufacture cost 55.8 percent, and the Pakistan manufacture price 18.8 percent.

Law and analysis.—Section 304 of the Tariff Act of 1930, as amended (19 U.S.C. 1304), provides in general that all articles of foreign origin imported into the United States must be legibly and conspicuously marked to indicate the English name of the country of origin to an ultimate purchaser in the United States. Section 134.1(b), Customs regulations, defines country of origin as the country of manufacture, production, or growth of any article of foreign origin entering the United States. Further work or material added to an article in another country must effect a substantial transformation in order to render such other country the country of origin.

Substantial transformation means that a manufacturing process is performed on the imported item so that the item loses its identity and becomes an integral part of a new article with a new name, character, and use. The cost of processing done in each country is not indicative of whether substantial transformation occurs, but it is one factor that may be considered in making the determination.

The machining of the English-made forged stainless steel instrument blanks to make the blanks have new and different characteristics is a substantial transformation of the blanks into a U.S. product. The finishing, polishing, assembly, and passivation processes done in Pakistan do not again substantially transform the product. Therefore, the country of origin for marking purposes is the United States, and the instruments may be excepted from marking requirements under

section 134.34(m), Customs regulations, as products of the United States exported and returned.

However, this is not determinative of whether the marking "Made in U.S.A." may appear on the surgical instruments. According to section 134.31, Customs regulations, marking requirements provided for in any other provision of any law, such as those of the Federal Trade Commission and other agencies must be complied with also.

The Federal Trade Commission has held that the claim "Made in U.S.A." constitutes an affirmative representation that an entire product is of domestic origin, and when a substantial portion of a product is of foreign origin it would be improper to mark a product "Made in U.S.A."

We conclude, therefore, that the surgical instruments may be permitted into the country unmarked, but may not be imported into the country marked "Made in U.S.A.," barring a Federal Trade Commission ruling otherwise.

Holding.—Surgical instruments consisting of foreign made components that are substantially transformed through a machining process in the United States, and then exported for further manufacturing processes that do not amount to substantial transformation, are upon reimportation into the United States excepted from marking as products of the United States exported and returned. The instruments may not, however, be marked "Made in U.S.A." against Federal Trade Commission prohibitions.

Decisions of the United States Court of Customs and Patent Appeals

(International Trade Commission Investigation No. 337–TA–43)

HALE FIRE PUMP CO. *v.* TOKAI, LTD., C. ITOH & CO., LTD., C. ITOH AMERICA, INC., AND INTERNATIONAL TRADE COMMISSION, No. 79–21

1. SECTION 337, TARIFF ACT OF 1930, AS AMENDED—CENTRIFUGAL TRASH PUMPS

Decision of the United States International Trade Commission, which found no violation of section 337 of the Tariff Act of 1930, as amended (19 U.S.C. 1337), in the importation into, or sale in, the United States of certain centrifugal trash pumps, is affirmed.

2. "MEANS FOR" LANGUAGE IN CLAIM

Element in a claim expressed in "means for" language is construed to cover the corresponding structure, material, or acts described in the specification and equivalents thereof.

3. ID.

"Means for" claims are not to be read in a vacuum and can only be construed by reference to the specification.

4. TEST FOR EQUIVALENCY

Test for equivalency is whether the allegedly infringing device employs substantially the same means to accomplish substantially the same results in substantially the same way.

5. ID.

What constitutes equvalency must be determined against the context of the patent, the prior art, and the particular circumstances of the case.

6. ID.

A finding of equivalence is a determination of fact which can be shown in any form, such as by testimony of experts or others versed in the technology, by documents, including texts and treatises, and by disclosures of the prior art.

U.S. Court of Customs and Patent Appeals, Feb. 7, 1980

Appeal From U.S. International Trade Commission

[Affirmed.]

Eugene E. Renz, Jr., William E. Hedges, Tom M. Schaumberg, Paul Plaia, Jr., Leslie Glick, attorneys of record for appellant.

Russell N. Shewmaker, General Counsel, *Edward Easton*, attorneys of record for the International Trade Commission, appellee, Harvey Kaye, Michael A. Hertzberg, attorneys of record for Tokai, Ltd., et al., appellees.

[Oral argument December 10, 1980 by Eugene E. Renz for appellant, Harvey Kaye for Tokai, Ltd., etc. and Edward R. Easton for the United States International Trade Commission.]

Before MARKEY, *Chief Judge*, RICH, BALDWIN, and MILLER, *Associate Judges*, and MALETZ,* *Judge*.

MILLER, Judge.

[1] This is an appeal from a decision[1] of the U.S. International Trade Commission (ITC) in investigation No. 337–TA–43, "In re Certain Centrifugal Trash Pumps." The ITC found that there was no violation of section 337 of the Tariff Act of 1930, as amended (19 U.S.C. 1337), in the importation into, or sale in, the United States of certain centrifugal trash pumps. We affirm.

BACKGROUND

Hale Fire Pump Co. (Hale) filed a complaint with ITC on January 9, 1978, alleging that Tokai, Ltd., Ataka America, Inc., C. Itoh & Co., Ltd., and C. Itoh Amercia, Inc., (respondents) were in violation of section 337 by reason of the unauthorized importation or sale in the United States of centrifugal trash pumps which infringed Hale's U.S. Patent No. 3,499,388[2] ('388 patent), the effect or tendency of which is to destroy or substantially injure an industry, efficiently and economically operated, in the United States.

Centrifugal trash pumps are used at construction cites to remove water or other liquids that contain solid debris. The pump covered by the '388 patent includes (see fig. 3 below) intake 14 and discharge 16 ports, a volute assembly 18 comprising suction and discharge sections, and an impeller 20 mounted in the discharge section and connected to a motor by a drive shaft 24. The key feature of the claimed invention is a releasable means which can alone assemble and disassemble the volute assembly from the pump casing. The only releasable means described in the specification is a reversible jack screw

* The Honorable Herbert N. Maletz of the U.S. Customs Court, sitting by designation.

[1] Rendered Feb. 14, 1979.

[2] U.S. Patent 3,499,388, entitled "Centrifugal Pump," issued Mar. 10, 1970, from application serial No. 645,708, filed on June 13, 1967, by Harry A. Eberhardt, and assigned to Hale.

assembly 109. Removal of the volute assembly is required in these pumps to provide access to the pump interior for removal of foreign objects or repair of internal parts.

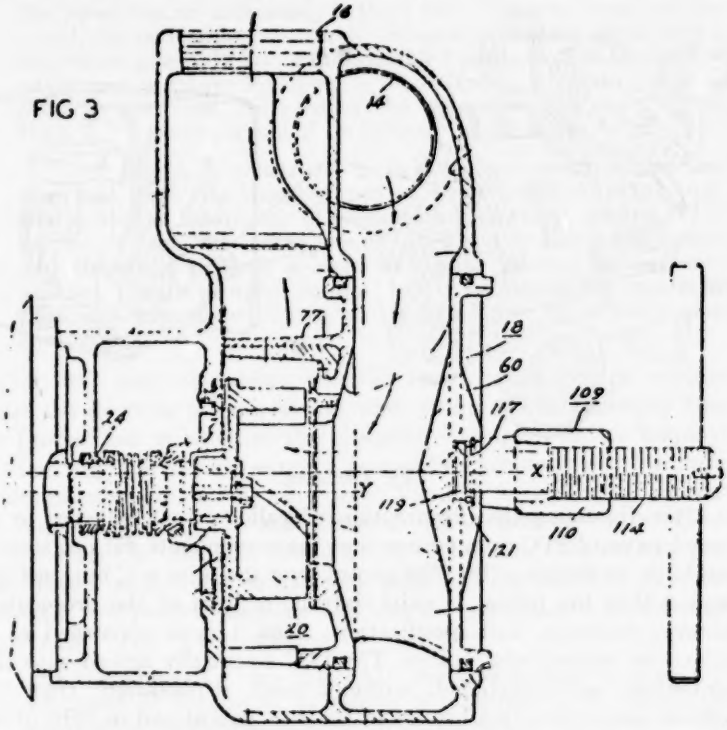

Claim 1, the only claim in issue [3], reads as follows:

> 1. A centrifugal pump comprising a casing having an intake side with at least one inlet port and a discharge side with a discharge port, a unitary volute assembly consisting of a suction volute section and a discharge volute section, an impeller mounted for rotation about a predetermined axis and releasable means having means for moving said volute assembly into an assembled position interiorly of the casing and for moving said volute assembly into a disassembled position whereby on releasing of said releasable means alone permitting complete disassembly of said volute assembly from said casing and any other interior parts of said pump.

Respondents' pumps, illustrated by two representative examples below, are essentially identical to Hale's pump except that respond-

[3] Before ITC, Hale alleged infringement of claim 17, but this claim has not been argued on appeal.

ents' pumps have no reversible jack screw assembly, but, instead, include wing fasteners A or locking knobs B, and one or more handles C for removing the volute assembly.

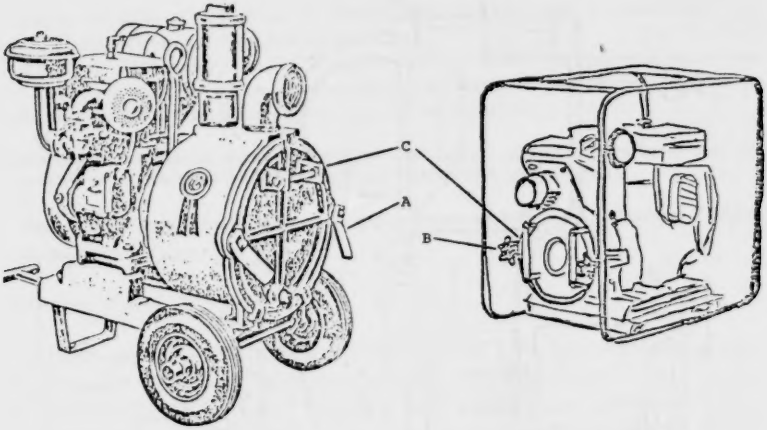

ITC Decision

After discussing the presumption of validity that attaches to an issued patent,[4] ITC pointed out that the respondents did not seek to establish invalidity of the '388 patent over the prior art, but, instead, argued that the patent is valid only if, in light of the prosecution history, drawings, and specification, claim 1 is so construed as to not cover respondents' pumps. The ITC essentially agreed with this contention and concluded, without much explanation, that "In light of the prosecution history of the '388 patent and in light of the specifications and drawings, it is apparent to us that the '388 patent is valid if properly and narrowly construed."

The ITC cited *Coleco Industries, Inc.* v. *International Trade Commission*, 65 CCPA 105, 573 F. 2d 1247, 197 USPQ 472 (1978), for the proposition that ascertainment of the coverage of a claim is made by reference to the patent's specification. In finding that claim 1 was not literally infringed by respondents' pumps, ITC stated:

> Clearly, claim 1, construed in light of the specifications, defines a reversible jack screw assembly with a definite mechanical advantage of power leverage. * * * Respondents' accused pumps do not have the reversible jack screw assembly of Hale's patented pumps referred to in the "388 patent specifications. Nor do respondents' accused pumps have the patented advantage of

[4] 35 U.S.C. 282 provides, in pertinent part, as follows: "A patent shall be presumed valid. * * * The burden of establishing invalidity of a patent or any claim thereof shall rest on the party asserting such invalidity."

> Hale's * * * pump. The knobs and handles of respondents' accused pumps, unlike the reversible jack screw of [Hale's pump], cannot exert a mechanical advantage or power leverage to break the seal between the pump's cover and the volute assembly. As the [specification indicates], if the [Hale] pump is frozen or corroded, its reversible jack screw (releasable means) alone moves the volute assembly into a disassembled position. The mechanical advantage of power leverage, in *alone* freeing a volute frozen in place by corrosion provided by the reversible jack screw of the Hale * * * pump, is one of its primary advantages. * * *
>
> * * * Claim 1, construed in light of the specifications and drawings, does not literally read on the releasable means (e.g., the knobs and handles) of respondents' accused pumps. With respect to the "releasable means" of claim 1, the specifications and drawings disclose a reversible jack screw. Respondents' accused pumps simply do not have the releasable means of [Hale's] pump, namely, a reversible jack screw or its mechanical equivalents.

The ITC then considered whether respondents' pumps infringe under the doctrine of equivalents, and, citing *Coleco*, indicated that the proper test is whether the allegedly infringing device employs substantially the same means to accomplish substantially the same results in substantially the same way. The ITC also pointed out that the Supreme Court in *Graver Tank & Manufacturing Co.* v. *Linde Air Products Co.*, 339 U.S. 605, 609, 85 USPQ 328, 330 (1950), said that "[w]hat constitutes equivalency must be determined against the context of the patent, the prior art, and the particular circumstances of the case." The ITC continued:

> [E]ven applying this doctrine, the Commission cannot find infringement because of principles of estoppel which delimit the scope of equivalents available to complainant. In other words, if, during the prosecution of a patent application, an applicant has amended the claims or has made representations or arguments limiting or narrowing the scope of the claims in order to obtain the allowance of the claims over the prior art by the patent examiner, then the applicant is estopped from subsequently trying to expand the scope of the claims beyond those amendments, representations, or arguments * * *. The prosecution history of the '388 patent clearly shows that the patent examiner, in requiring amendments to what became claim 1 prior to its allowance over the prior art, limited the releasable means of the claims so that it defined a reversible jack screw assembly. Under the doctrine of file wrapper estoppel, complainant cannot now broaden the meaning of the term "releasable means" beyond what was allowed by the examiner over the prior art. * * *

The ITC concluded that because there was no infringement of the '388 patent, respondents could not be in violation of section 337. In light of this conclusion, the majority of the ITC made no finding on

whether the domestic industry is efficiently and economically operated or whether, assuming infringement, the domestic industry is substantially injured.

Two Commissioners filed concurring opinions. Commissioner Alberger, while agreeing that the patent was valid but not infringed, pointed out that this court in *Coleco* has admonished ITC to reach all appealable issues in order to avoid a remand. Commissioner Alberger found that even if respondents infringed the '388 patent, this action did not have the effect or tendency to substantially injure the efficiently or economically operated domestic industry. Commissioner Stern, while also agreeing on validity and infringement, thought that the record was inadequate to make any finding on whether the domestic industry was efficiently operated or was injured.

Opinion

The question presented to this court is whether respondents' pumps include the "releasable means" recited in claim 1. The releasable means is defined, in claim 1, as:

> releasable means having means for moving said volute assembly into an assembled position interiorly of the casing and for moving said volute assembly into a disassembled position whereby on releasing of said releasable means alone permitting complete disassembly of said volute assembly from said casing and any other interior parts of said pump.

Because we are dealing with a **[2]** "means for" type claim, reference must be made to the last paragraph of 35 U.S.C. 112, which provides:

> An element in a claim for a combination may be expressed as a means or step for performing a specified function without the recital of structure, material, or acts in support thereof, and such claim shall be construed to cover the corresponding structure, material, or acts described in the specification and equivalents thereof.

The only structure described in appellant's specification which corresponds to the releasable means is a reversible jack screw assembly. Therefore, the "releasable means" in claim 1 must be construed to cover a reversible jack screw and "equivalents thereof." *Lockheed Aircraft Corp.* v. *United States*, 553 F. 2d 69, 82, 193 USPQ 449, 460 (Ct. Cl. 1977). Because respondents' pumps clearly do not include a reversible jack screw, we must determine whether these pumps include a functional equivalent.[5]

[5] Appellant's position is that respondents' pumps do contain such a "releasable means" because they are capable of performing the functions described in the claim after the words "releasable means." However, according to section 112, [3] "means for" claims are not to be read in a vacuum and can *only* be construed by reference to the specification. *Graphicane Corp.* v. *Bais Corp.*, 472 F. 2d 1202, 1204, 176 USPQ 455, 456 (6th Cir. 1973); *Ford Motor Co.* v. *Gordon Form Lathe Co.*, 87 F. 2d 390, 392, 32 USPQ 409, 411 (6th Cir. 1937) Here, the determinant for the coverage of claim 1 is the structure shown in the specification which corresponds to a releasable means; and any "equivalents thereof."

As properly stated by ITC, [4] under the doctrine of equivalents, the test is whether the allegedly infringing device employs substantially the same means to accomplish substantially the same result in substantially the same way. *Graver Tank & Manufacturing Co.* v. *Linde Air Co.*, 339 U.S. 605, 85 USPQ 328 (1950); *Coleco Industries, Inc.* v. *International Trade Commission*, 65 CCPA 105, 573 F. 2d 1247, 197 USPQ 472 (1978); *Bendix Corp.* v. *United States*, 199 USPQ 203, 223 (Trial Div. Ct. Cl. 1978); *Parmellee Pharmaceutical Co.* v. *Zink*, 285 F. 2d 465, 128 USPQ 271 (8th Cir. 1961); *In re Shaffer*, 43 CCPA 758, 229 F. 2d 476, 108 USPQ 326 (1956). Furthermore, as pointed out by the Court in *Graver Tank & Manufacturing Co.* v. *Linde Air Products Co.*, *supra* at 609, 85 USPQ at 330–31:

> [5] What constitutes equivalency must be determined against the context of the patent, the prior art, and the particular circumstances of the case. Equivalence, in the patent law, * * * is not an absolute to be considered in a vacuum. It does not require complete identity for every purpose and in every respect. * * * Consideration must be given to the purpose for which an ingredient is used in a patent, the qualities it has when combined with the other ingredients, and the function which it is intended to perform. An important factor is whether persons reasonably skilled in the art would have known of the interchangeability of an ingredient not contained in the patent with one that was.
>
> [6] A finding of equivalence is a determination of fact. Proof can be made in any form: Through testimony of experts or others versed in the technology; by documents, including texts and treaties, and, of course, by the disclosures of the prior art. * * *

Accord, *Coleco Industries, Inc.* v. *International Trade Commission*, *supra*, at 113, 573 F. 2d at 1254, 197 USPQ at 477.

In determining whether respondents' knobs and handles [6] are an equivalent of the reversible jack screw assembly, we refer to the following portion of appellant's '388 patent specification which describes the jack screw assembly, its manner of operation, and its result:

> Displacement of the volute assembly is controlled by means of a jack screw assembly 109 comprising a yoke member 110 having inturned lugs 112 adjacent opposite ends thereof which engage in groove-like pockets 113 in the exterior of the pump body and a jack screw 114 threaded in a hub portion of the yoke, the inner end of which engages in a pocket 117 in the end wall 60 of the volute. As illustrated in FIGS. 3 and 7, the inner end of jack screw 114 is provided with an enlarged head 119 which is adapted to engage a ring 121 seated in a groove in the pocket 117. By this arrangement the jack screw may be used to disassemble the volute assembly simply by turning the jack screw.

[6] We consider only this embodiment of respondents' pumps because the parties have not argued that any other embodiment should be treated differently.

> In normal operation, the jack screw 114 is turned in to firmly seat the volute in place in the pump body, the spiral wall 77 abutting the front wall of the pump body to properly locate the walls of the volute with the walls of the pump body to establish seals between the intake section and discharge section. Now when it is desired to remove the volute assembly, the jack screw is simply threaded outwardly whereby the volute is displaced axially toward the rear of the pump body. This arrangement provides an easy means for assembling the volute to the one-piece body portion initially and also provides the necessary power leverage to break the volute free should it be stuck from corrosion or foreign matter, thus affording an easy means for rotating the volute to adjust the cutoff clearance as discussed above.

The importance of this jack screw assembly in freeing a volute was reiterated by appellant during prosecution of the '388 patent:

> It is noted that Guyer [a reference] shows a jack screw assembly that is only operable to seat in one direction, that is, to maintain the closure unit 29 firmly seated. It is not a reversible jack screw * * *. In applicant's pump the reversible feature is important for the reason that the volute may become frozen or locked in place due to corrosion over a period of time and it would not be possible with Guyer's jack screw to remove it without additional means.

Thus, a vital characteristic of the reversible jack screw is that it provides a mechanical advantage which exerts a force when removing a volute that has become frozen or locked. The handles on respondents' pumps do not provide such a force,[7] and respondents' witness, Mr. Putnam, demonstrated that the handles are not even needed to remove the volute assembly in respondents' pumps. Accordingly, we conclude that respondents' handles and knobs are not an equivalent of the reversible jack screw assembly.

In view of the foregoing, we hold that respondents' pumps do not infringe claim 1 of the '388 patent.

The decision of ITC that respondents are not in violation of section 337 [8] is *affirmed*.

---

[7] Nor do the knobs, which have nothing to do with moving the volute to a disassembled position.

[8] In view of our decision, it is unnecessary to reach the issue of file wrapper estoppel.

Decisions of the United States Customs Court

United States Customs Court

One Federal Plaza

New York, N.Y. 10007

Chief Judge

Edward D. Re

Judges

Paul P. Rao
Morgan Ford
Scovel Richardson
Frederick Landis
James L. Watson
Herbert N. Maletz
Bernard Newman
Nils A. Boe

Senior Judge

Samuel M. Rosenstein

Clerk

Joseph E. Lombardi

Customs Decisions

(C.D. 4838)

ARMSTRONG BROS. TOOL CO.; BERGMAN TOOL MANUFACTURING CO., INC.; DURO METAL PRODUCTS COMPANY; MILWAUKEE TOOL & EQUIPMENT CO., INC.; H. K. PORTER, INC.; PROTO TOOLS DIVISION, INGERSOLL RAND COMPANY; TOOL GROUP, DRESSER INDUSTRIES, INC.; AND THE WRIGHT TOOL & FORGE COMPANY, PLAINTIFFS *v.* UNITED STATES (DAIDO CORPORATION, STEELCRAFT TOOLS DIVISION, PARTY-IN-INTEREST), DEFENDANT

On Plaintiffs' Motion and the Cross-Motions by Defendant and Party-in-Interest for Summary Judgment

Court No. 77-8-02005

[Plaintiffs' motion denied; cross-motions by defendant and party-in-interest granted.]

(Dated January 28, 1980)

Frederick L. Ikenson, Esq., for the plaintiffs.

Alice Daniel, Assistant Attorney General, *David M. Cohen*, Director, Commercial Litigation Branch, *Joseph I. Liebman*, Attorney in Charge, Field Office for Customs Litigation, and *Sidney N. Weiss*, trial attorney, Esqs., for the defendant.

Tanaka Walders & Ritger, Esqs. (*H. William Tanaka, Lawrence R. Walders* and *Wesley K. Caine*, Esqs., of counsel) for the party-in-interest.

NEWMAN, Judge:

INTRODUCTION

Plaintiffs, American manufacturers and/or wholesalers of certain hand tools, contest the negative injury determination of the U.S. Tariff Commission (Commission)[1] in "Wrenches, Pliers, Screwdrivers, and Metal-Cutting Snips and Shears From Japan," investigation No. AA1921-141 (39 F.R. 38133 (1974)), under the Antidumping Act of 1921, as amended (19 U.S.C. 160, et seq. (1970)). This action has been brought under the provisions of 28 U.S.C. 1582(b) (1976), 28 U.S.C. 2632(a) (1976) and 19 U.S.C. 1516(c) (1976). Daido Corp., Steelcraft Tools Division, the party-in-interest, is the consignee of New York, N.Y., consumption entry No. 77-471888, covering merchandise which falls within the description "wrenches, pliers, screwdrivers, and metal-cutting snips and shears from Japan."[2]

In this action, plaintiffs seek to overturn the negative injury determination reached by the Commission on October 21, 1974, viz, that "an industry in the United States is not being injured or is not likely to be injured, or is not prevented from being established, by reason of the importation of wrenches, pliers, screwdrivers, and metal-cutting snips and shears from Japan that are being, or are likely to be, sold at less than fair value [LTFV] within the meaning of the Antidumping Act of 1921, as amended."[3] Specifically, plaintiffs allege that the Commission's negative injury determination is erroneous as a matter of law, is arbitrary and capricious, and is not supported by substantial evidence. Plaintiffs seek an order setting aside the Commission's determination and directing the Secretary of the Treasury to publish a finding of dumping, with the result that dumping duties

[1] The U.S. Tariff Commission was subsequently renamed the U.S. International Trade Commission by section 171(a) of the Trade Act of 1974. (19 U.S.C. 2231(a) (1976).)

[2] Pursuant to 19 U.S.C. 1516(f) (1976) the consignee or his agent has the right to appear and be heard as a party in this civil action.

[3] Preliminarily, the Treasury Department determined that the subject hand tools from Japan are being, or are likely to be, sold in the United States at less than fair value within the meaning of the Antidumping Act, 1921, as amended.

will be assessed, where appropriate, on entries of the subject hand tools from Japan.

This action is presently before me on plaintiffs' motion for summary judgment, and the cross-motions for summary judgment by defendant and the party-in-interest. The parties assert there is no genuine issue of fact. I have studied the massive administrative record and the excellent memoranda of law submitted by counsel; and for the reasons hereinafter expressed, I find that no justiciable issue of fact is presented in this case, and that defendant and the party-in-interest are entitled to summary judgment dismissing this action.

STATUTES INVOLVED

The statutory provisions relevant to this action are:

Section 201, Antidumping Act of 1921, as amended, 19 U.S.C. 160 (1970):

Initiation of investigation; injury determination; findings; withholding appraisement; publication in Federal Register

(a) Whenever the Secretary of the Treasury (hereinafter called the Secretary) determines that a class or kind of foreign merchandise is being, or is likely to be, sold in the United States or elsewhere at less than its fair value, he shall so advise the U.S. Tariff Commission, and the said Commission shall determine within 3 months thereafter whether an industry in the United States is being or is likely to be injured, or is prevented from being established, by reason of the importation of such merchandise into the United States. The said Commission, after such investigation as it deems necessary, shall notify the Secretary of its determination, and, if that determination is in the affirmative, the Secretary shall make public a notice (hereinafter in secs. 160 to 171 of this title called a "finding") of his determination and the determination of the said Commission. For the purposes of this subsection, the said Commission shall be deemed to have made an affirmative determination if the Commissioners of the said Commission voting are evenly divided as to whether its determination should be in the affirmative or in the negative. The Secretary's finding shall include a description of the class or kind of merchandise to which it applies in such detail as he shall deem necessary for the guidance of customs officers.

(b) Whenever, in the case of any imported merchandise of a class or kind as to which the Secretary has not so made public a finding, the Secretary has reason to believe or suspect, from the invoice or other papers or from information presented to him or to any person to whom authority under this section has been delegated, that the purchase price is less, or that the exporter's sales price is less or likely to be less, than the foreign market value (or, in the absence of such value, than the constructed value), he shall forthwith publish notice of that fact in the Federal Register and shall authorize, under such regulations as he may prescribe, the withholding of appraisement reports as to such merchandise entered, or withdrawn from warehouse, for

consumption, not more than 120 days before the question of dumping has been raised by or presented to him or any person to whom authority under this section has been delegated, until the further order of the Secretary, or until the Secretary has made public a finding as provided for in subdivision (a) in regard to such merchandise.

(c) The Secretary, upon determining whether foreign merchandise is being, or is likely to be, sold in the United States at less than its fair value, and the U.S. Tariff Commission, upon making its determination under subsection (a) of this section, shall each publish such determination in the Federal Register, with a statement of the reasons therefor, whether such determination is in the affirmative or in the negative.

Section 202(a), Antidumping Act of 1921, as amended, 19 U.S.C. 161(a) (1970):

Amount of duty to be collected; determination of foreign market value of goods

(a) In the case of all imported merchandise, whether dutiable or free of duty, of a class or kind as to which the Secretary of the Treasury has made public a finding as provided for in section 160 of this title, entered, or withdrawn from warehouse, for consumption, not more than 120 days before the question of dumping was raised by or presented to the Secretary or any person to whom authority under said section has been delegated, and as to which no appraisement has been made before such finding has been so made public, if the purchase price or the exporter's sales price is less than the foreign market value (or, in the absence of such value, than the constructed value) there shall be levied, collected, and paid, in addition to any other duties imposed thereon by law, a special dumping duty in an amount equal to such difference.

Section 516, Tariff Act of 1930, as amended, 19 U.S.C. 1516 (1976):

Petitions by American manufacturers, producers, or wholesalers

(a) Classification, rate of duty, countervailing duty, and antidumping duty furnished upon request; petition; contents

The Secretary shall, upon written request by an American manufacturer, producer, or wholesaler, furnish the classification, the rate of duty, the additional duty described in section 1303 of this title (hereinafter in this section referred to as countervailing duties), if any, and the special duty described in section 161 of this title (hereinafter in this section referred to as antidumping duties), if any, imposed upon designated imported merchandise of a class or kind manufactured, produced, or sold at wholesale by him. If such manufacturer, producer, or wholesaler believes that the appraised value is too low, that the classification is not correct, that the proper rate of duty is not being assessed, or that countervailing duties or antidumping duties should be assessed, he may file a petition with the Secretary setting forth (1) a description of the merchandise, (2) the appraised value, the classification, or the rate or rates of duty that he believes proper and (3) the

reasons for his belief including, in appropriate instances, the reasons for his belief that countervailing duties or antidumping duties should be assessed.

(b) Determination of petition; notification to petitioner; procedures for countervailing duties and antidumping duties

If, after receipt and consideration of a petition filed by an American manufacturer, producer, or wholesaler, the Secretary decides that the appraised value of the merchandise is too low, that the classification of the article or rate of duty assessed thereon is not correct, or that countervailing duties or antidumping duties should be assessed, he shall determine the proper appraised value or classification, rate of duty, or countervailing duties, or antidumping duties and shall notify the petitioner of his determination. Except for countervailing duty and antidumping duty purposes, all such merchandise entered for consumption or withdrawn from warehouse for consumption more than thirty days after the date such notice to the petitioner is published in the weekly CUSTOMS BULLETIN shall be appraised or classified or assessed as to rate of duty in accordance with the Secretary's determination. For countervailing duty purposes, the procedures set forth in section 1303 of this title shall apply. For antidumping duty purposes, the procedures set forth in section 160 of this title shall apply.

(c) Determination of correctness of initial appraised value, classification, rate of duty, or non-assessment of countervailing duties or antidumping duties; contest by petitioner; procedure

If the Secretary decides that the appraised value or classification of the articles or the rate of duty with respect to which a petition was filed pursuant to subsection (a) of this section is correct, or that countervailing duties or antidumping duties should not be assessed, he shall so inform the petitioner. If dissatisfied with the decision of the Secretary, the petitioner may file with the Secretary, not later than 30 days after the date of the decision, notice that he desires to contest the appraised value or classification of, or rate of duty assessed upon or the failure to assess countervailing duties or antidumping duties upon, the merchandise. Upon receipt of notice from the petitioner, the Secretary shall cause publication to be made of his decision as to the proper appraised value or classification or rate of duty or that countervailing duties or antidumping duties should not be assessed and of the petitioner's desire to contest, and shall thereafter furnish the petitioner with such information as to the entries and consignees of such merchandise, entered after the publication of the decision of the Secretary at such ports of entry designated by the petitioner in his notice of desire to contest, as will enable the petitioner to contest the appraised value or classification of, or rate of duty imposed upon or failure to assess countervailing duties or antidumping duties upon, such merchandise in the liquidation of one such entry at such port. The Secretary shall direct the appropriate Customs officer at such ports to notify the petitioner by mail immediately when the first of such entries is liquidated.

(d) Contest of Secretary's determination that foreign merchandise is not being sold in United States at less than fair value or that bounty or grant is not being paid

Within 30 days after a determination by the Secretary—

(1) under section 160 of this title, that a class or kind of foreign merchandise is not being, nor likely to be, sold in the United States at less than its fair value, or

(2) under section 1303 of this title that a bounty or grant is not being paid or bestowed,

an American manufacturer, producer, or wholesaler of merchandise of the same class or kind as that described in such determination may file with the Secretary a written notice of a desire to contest such determination. Upon receipt of such notice the Secretary shall cause publication to be made thereof and of such manufacturer's, producer's, or wholesaler's desire to contest the determination. Within 30 days after such publication, such manufacturer, producer, or wholesaler may commence an action in the U.S. Customs Court contesting such determination.

(e) Appraisal, classification, and liquidation of entries of merchandise covered by published decisions of the Secretary

Notwithstanding the filing of an action pursuant to section 2632 of title 28, merchandise of the character covered by the published decision of the Secretary (when entered for consumption or withdrawn from warehouse for consumption on or before the date of publication of a decision of the U.S. Customs Court or of the U.S. Court of Customs and Patent Appeals, not in harmony with the published decision of the Secretary) shall be appraised or classified, or both, and the entries liquidated, in accordance with the decision of the Secretary and, except as otherwise provided in this chapter, the final liquidations of these entries shall be conclusive upon all parties.

(f) Consignee or his agent as party in interest before the Customs Court

The consignee or his agent shall have the right to appear and to be heard as a party in interest before the U.S. Customs Court.

(g) Appraisement, classification, and assessment of duty of merchandise covered by published decision of the Secretary in accordance with final judicial decision of Customs Court or Court of Customs and Patent Appeals sustaining cause of action in whole or in part; suspension of liquidation of entries

If the cause of action is sustained in whole or in part by a decision of the U.S. Customs Court or of the U.S. Court of Customs and Patent Appeals, merchandise of the character covered by the published decision of the Secretary, which is entered for consumption or withdrawn from warehouse for consumption after the date of publication of the court decision, shall be subject to appraisement, classification, and assessment of duty in accordance with the final judicial decision in the action, and the liquidation of entries covering the merchandise so entered or withdrawn shall be suspended until final disposition is made of the action, whereupon the entries shall be liquidated, or if necessary, reliquidated in accordance with the final decision.

(h) Regulations implementing required procedures

Regulations shall be prescribed by the Secretary to implement the procedures required under this section.

ISSUE PRESENTED

The core issue is whether the Commission's negative determination was arbitrary, capricious or otherwise contrary to law.

BACKGROUND

To put the Commission's determination in proper perspective, it would be helpful at this juncture to briefly set forth the procedures applicable under the Antidumping Act as succinctly summarized by Judge Maletz in *Voss International Corp.* v. *United States*, 78 Cust. Ct. 130, 131, n. 1, C.D. 4698, 432 F. Supp. 205 (1977):

> The Antidumping Act provides in general that if a foreign exporter sells merchandise to the United States at a price less than its "fair value," i.e., the price charged by the exporter in his home market—with resultant injury to a U.S. industry—a special dumping duty will be assessed upon the importation of the merchandise. If the exporter and importer are not related, this duty is measured by the difference between the higher "foreign market value" and the lower price charged the U.S. importer. The question as to whether merchandise is being sold at less than fair value is determined by the Secretary of the Treasury. If the Secretary makes an affirmative finding in this regard, the question as to whether there is injury is determined by the U.S. Tariff Commission (now known as the U.S. International Trade Commission). If the Commission makes a determination of injury, the Secretary makes and publishes a finding of dumping. See, e.g., *F. W. Myers & Co., Inc., et al.* v. *United States*, 72 Cust. Ct. 219, 220, C.D. 4544, 376 F. Supp. 860, 862 (1974).

The court's jurisdiction under 19 U.S.C. 1516(c) to review the Commission's negative injury determination is not in dispute. In view of Chief Judge Re's well-reasoned opinion in *SCM Corporation* v. *United States* (*Brother International Corporation, Party-in-Interest*), 80 Cust. Ct. 226, C.R.D. 78-2, 450 F. Supp. 1178 (1978), there can be no doubt that the Customs Court, rather than the district courts, has exclusive jurisdiction to review a negative injury determination by the Commission under the Antidumping Act. See also my opinions in *Armstrong Bros. Tool Co. et al.* v. *United States* (*Great Neck Saw Manufacturing, Incorporated, Party-in-Interest*), 80 Cust. Ct. 160, C.D. 4751, 453 F. Supp. 889 (1978), *modified on rehearing*, 81 Cust. Ct. 162, C.R.D. 78-14 (1978); and *Sprague Electric Company* v. *United States* (*Capar Components Corp., Party-in-Interest*), 81 Cust. Ct. 168, C.R.D. 78-18, 462 F. Supp. 966 (1978).

The highlights of the administrative history of this action are undisputed, and may be briefly summarized:

1. On September 25, 1973, an antidumping proceeding notice issued by the Treasury Department was published in the Federal Register (38 F.R. 26738 (1973)), advising that an investigation was being instituted to determine whether certain "Non-Powered Hand Tools From Japan" were being or were likely to be sold at LTFV.

2. On March 25, 1974, a withholding of appraisement notice was published in the Federal Register (39 F.R. 11122 (1974)).

3. On June 21, 1974, the Treasury Department published in the Federal Register a determination of sales at LTFV covering "Non-Powered Hand Tools From Japan" (39 F.R. 22287 (1974)); and on July 23, 1974, the Treasury Department published in the Federal Register an amendment to the aforementioned determination, restricting its scope to wrenches, pliers, screwdrivers, and metal-cutting snips and shears from Japan (39 F.R. 26758 (1974)).

4. On July 30, 1974, the Commission published in the Federal Register a notice of its investigation No. AA1921-141, and of a public hearing in which all parties would be "given an opportunity to be present, to produce evidence, and to be heard" (39 F.R. 27614 (1974)). Thereafter, on August 20–23, 1974, the Commission held a hearing at which testimony and exhibits were received. All public testimony was subject to cross-examination; and subsequently the Commission received post-hearing briefs.

5. On October 21, 1974, a negative injury determination was reached by the unanimous vote of five Commissioners, namely, Chairman Bedell, Vice Chairman Parker, and Commissioners Moore, Ablondi, and Leonard. Commissioner Minchew did not participate in the decision.

6. On October 29, 1974, the Commission published its negative injury determination in the Federal Register, together with a statement of reasons. Commissioner Leonard submitted a separate statement of reasons (39 F.R. 38133 (1974)).

In arriving at its determination, "the Commission gave due consideration to all written submissions from interested parties, evidence adduced at the hearing, and all factual information obtained by the Commission's staff from questionnaires, personal interviews, and other sources." *Id.*

No question has been raised concerning plaintiffs' compliance with the administrative prerequisites to the initiation of a civil action prescribed by 19 U.S.C. 1516 (a) and (c).

During the discovery phase of this litigation, defendant moved for a protective order seeking, among other things, to prohibit plaintiffs from conducting discovery into matters beyond the Commission's notice of investigation and hearing and the Commission's negative injury determination and statement of reasons. The defendant's

motion was decided by this court on June 27, 1978, culminating in an order which, in pertinent part, reads (80 Cust. Ct. 252, 253–54, C.R.D. 78–5 (1978)):[4]

> 2. That the Secretary of the U.S. International Trade Commission, Kenneth R. Mason, shall prepare and transmit to Joseph E. Lombardi, Clerk of the U.S. Customs Court, on or before July 28, 1978, the following: (1) A certified copy of the transcript of proceedings and exhibits introduced before the Commission in investigation AA1921–141; (2) certified copies of all written submissions, questionnaires, reports and all other documents relating to investigation AA1921–141; and (3) all other things in the files of the Commission relating to the investigation. *Cf.* Judge Maletz' order in *Pasco Terminals, Inc.* v. *United States*, 80 Cust. Ct. 249, C.R.D. 78–3 (1978), and also his unpublished order in the same case entered on May 8, 1978. See also my order in *Sprague Electric Company* v. *United States* (*Capar Components Corp., Party-in-Interest*), 80 Cust. Ct. 256, C.R.D. 78–7 (1978), entered concurrently herewith.
>
> 3. That denial of defendant's present motion for a protective order shall be without prejudice to renewal respecting any documents or things that were received by the Commission on a confidential basis or are otherwise privileged.
>
> 4. That the basis of this order is to enable the court to determine whether or not the Commission's finding of injury was, among other things, arbitrary, an abuse of discretion, or otherwise contrary to law. See, e.g., *Camp* v. *Pitts*, 411 U.S. 138 (1973); *Citizens to Preserve Overton Park* v. *Volpe*, 401 U.S. 402 (1971); *Imbert Imports, Inc.* v. *United States*, 60 CCPA 123, C.A.D. 1094, 475 F. 2d 1189 (1973); *Suwannee Steamship Company* v. *United States*, 79 Cust. Ct. 19, C.D. 4708, 435 F. Supp. 389 (1977); *Cf. Dunlop* v. *Bachowski*, 421 U.S. 560 (1975). See also questions and answers attached to the letter of Daniel Minchew, Chairman, U.S. Interntional Trade Commission, November 16, 1977, reproduced in *Hearing before the Subcommittee on Trade, House Committee on Ways and Means, on the Adequacy and the Administration of the Antidumping Act of 1921* (95th Cong., 1st sess., 1977) pp. 65–66.

Pursuant to the foregoing order, as modified, the Secretary of the Commission transmitted what are represented to be all of the documents and things enumerated and described above that were locatable, with the exception of the three documents that were claimed by the Commission Chairman to be privileged.[5] Defendant, however, again advances the argument that this court's review is limited to the Com-

---

[4] This order was modified by a protective order entered on Aug. 1, 1978, and was further modified in an order entered on Dec. 29, 1978, wherein the claim of privilege was sustained as to 3 documents.

[5] These documents and things, comprising the voluminous administrative record, are listed on two numbered indexes, which were also transmitted to the court, entitled "List No. 1—Public Documents Transmitted to the U.S. Customs Court," and "List No. 2—Confidential Documents Transmitted to the U.S. Customs Court." Public documents are identified on list No. 1, while those documents which the Commission treated as containing confidential business information and which are subject to the terms of the stipulation for protective order are identified on list No. 2.

mission's statement of reasons. But defendant's position respecting the scope of review has been consistently rejected by a long and uninterrupted line of authorities. See *Pasco Terminals, Inc.* v. *United States*, 80 Cust. Ct. 249, C.R.D. 78–3 (1978); *Armstrong Bros. Tool Co. et al.* v. *United States* (*Daido Corporation, Steelcraft Tools Division, Party-in-Interest*), 80 Cust. Ct. 252, C.R.D. 78–5 (1978); *Sprague Electric Company* v. *United States* (*Capar Components Corp., Party-in-Interest*), 80 Cust. Ct. 256, C.R.D. 78–7 (1978); *SCM Corporation* v. *United States* (*Brother International Corporation, Party-in-Interest*), 81 Cust. Ct. 159, C.R.D. 78–13 (1978), and authorities cited therein, See also *Michelin Tire Corporation* v. *United States*, 82 Cust. Ct.—. C.R.D. 79–6, 469 F. Supp. 270 (1979), *application for extraordinary writs denied sub nom. United States* v. *James L. Watson, Judge, United States Customs Court; Michelin Tire Corporation, Party-in-Interest*, 66 CCPA—, C.A.D. 1230 (1979). Accordingly, I have carefully reviewed the entire administrative record transmitted to the court by the Commission, and not merely the statement of reasons.

OPINION

I

Our appellate court has repeatedly stressed the broad discretionary authority vested in the Commission to determine the existence or likelihood of injury by reason of LTFV imports and the limited standard of judicial review applicable to the Commission's determinations. *City Lumber Co. et al.* v. *United States*, 59 CCPA 89, C.A.D. 1045, 457 F. 2d 991 (1972); *Imbert Imports, Inc., et al.* v. *United States*, 60 CCPA 123, C.A.D. 1094, 475 F. 2d 1189 (1973), and cases cited therein.

In *City Lumber*, the Court of Customs and Patent Appeals articulated the standard of judicial review applicable to the Commission's injury determinations under the Antidumping Act as follows (59 CCPA at 92):

> As the appellate term opinion observes, under the Antidumping Act Congress delegated to the Commission a broad discretionary power to determine whether an industry is being, or is likely to be, injured by the sale of imports at less than fair value. The courts have a very limited power of review over the Commission's determinations. It is not the judicial function to review or to weigh the evidence before the Commission or to question the correctness of findings drawn therefrom. *Kleberg & Co. (Inc.)* v. *United States*, 21 CCPA 110, T.D. 46446 (1933); compare *United States* v. *George S. Bush & Co.*, 310 U.S. 371 (1940). As stated in *Kleberg*, our review of determinations of injury or likelihood of injury in antidumping cases does not extend beyond determining whether the Commission has acted within its delegated authority, has correctly interpreted statutory language, and has correctly applied

the law. As indicated in the *Bush* opinion, "No question of law is raised when the exercise of * * * discretion is challenged."

Continuing, the appellate court went on to observe (59 CCPA at 95):

> * * * We deem appellants' admission to show that there was *substantial evidence to support the Commission's determination*, which eliminates one of their arguments for its invalidity. Moreover, the substance of this argument, in our view, is that appellants would have us weigh the evidence before the Commission. We need cite no authority for the proposition that we cannot do that because in their brief below appellants admit that "the court may neither substitute its judgment in factual matters for that of the Tariff Commission in an injury determination under the Antidumping Act, nor may it weigh the evidence before the Commission * * *." The Commission is under no obligation either to disclose all of the evidence in its possession nor to state in meticulous detail exactly on what basis it applies that evidence in determining injury or likelihood thereof. This point is, therefore, without merit. [Italic added.]

The standard of review enunciated in *City Lumber* was quoted and reaffirmed in *Imbert Imports, supra*. There, the appellate court further stated (60 CCPA at 127):

> * * * In short, we find that the *findings of the Commission are supported by substantial evidence*, and that the factors pointed out in the Chairman's dissent are not of sufficient moment to establish that the decision of the majority was *arbitrary*.
>
> Accordingly, we are satisfied that *the Commission here acted within its delegated authority and correctly interpreted and applied the law*. In fact, we think, as did the appellate term, that the determination would pass the *test as not being arbitrary, an abuse of discretion, or contrary to law*, even if the more extensive scope of review under the Administrative Procedure Act (the provisions now 5 U.S.C. 706) were appropriate, as appellant contends. As it is, we make no express holding with regard to the applicability of that act. [Italic added.]

Recently, in *Pasco Terminals, Inc.* v. *United States*, 83 Cust. Ct.—, C.D. 4823, 477 F. Supp. 201 (1979), the court addressed the discretionary authority of the Commission in injury determinations under the Antidumping Act and the applicable standard of judicial review. On that aspect of the case, the court made the following pertinent observations (83 Cust. Ct. at —):

> It is therefore apparent from its determination that the Commission properly employed criteria which are relevant to the determination as to whether "injury" or "likelihood of injury" in fact existed. *The relative weight it gave to those criteria was a matter if discretion and expert judgment.*
>
> In sum, the determination and statements of reasons covered all the relevant points and showed a rational and defensible basis for the affirmative determination. Accordingly, the de-

termination must be upheld. For it is basic that having been delegated discretionary authority by the Congress, the Commission's determination may not be disturbed by the court when, as here, it had a rational basis in fact and was not contrary to law. See, e.g., *Citizens to Preserve Overton Park* v. *Volpe*, 401 U.S. 402 (1971); *Suwannee Steamship Co.* v. *United States*, 79 Cust. Ct. 19, 23–24, C.D. 4708, 435 F. Supp. 389 (1977). *And since the Commission has been delegated discretionary authority, it is not the function of the court to weigh the evidence considered by the Commission, determine the credibility of the witnesses appearing at the hearing, and substitute its judgment for that of the Commission;* indeed, the Commission decision, if rational and not contrary to law, must be upheld by the court *even though that decision is not one the court would have reached had the question first arisen in judicial proceedings.* See, e.g., *Imbert Imports, Inc.* v. *United States*, 60 CCPA 123, 127, C.A.D. 1094, 475 F. 2d 1189 (1973); *City Lumber Co.* v. *United States*, 64 Cust. Ct. 826, 832, 834, A.R.D. 269, 311 F. Supp. 340 (1970), *aff'd*, 59 CCPA 89, *supra*. [Italic added.]

Again, in *ASG Industries, Inc., et al.* v. *United States*, 82 Cust. Ct. 101, C.D. 4794, 467 F. Supp. 1200 (1979) (*appeal pending*), Judge Maletz in a scholarly opinion considered *in extenso* the scope of review in countervailing duty cases, and alluded to the Commission's finding of injury under the Antidumping Act (82 Cust. Ct. at 146):

> Defendant also relies on *Pasco Terminals, Inc.* v. *United States*, 80 Cust. Ct. 249, C.R.D. 78–3 (1978), where this court held that the scope of review of an International Trade Commission's finding of injury under the Antidumping Act was, among other things, arbitrary or capricious, an abuse of discretion, or otherwise contrary to law. *But there again, a determination of whether or not there was injury under the law is committed by Congress to the sound discretion of the Commission.* Furthermore, under the Commission's practice, an administrative record is made, hearings are held, cross-examination of witnesses is permitted and specific and detailed findings are made. [Italic added.]

And in the wide-ranging Trade Agreements Act of 1979 (Public Law No. 96–39, 93 Stat. 144, enacted July 26, 1979), Congress added a new section 516A to the Tariff Act of 1930 wherein the scope and standards of judicial review in antidumping and countervailing duty cases are specifically addressed. The new section 516A, of course, is not applicable in the present case. Significantly, however, in the Senate Finance Committee's report (S. Rept. No. 96–249, 96th Cong., 1st sess. at 251 (1979)) accompanying the bill that was enacted (H.R. 4537), Congress stated its understanding of the existing standard of review applicable to determinations of the Commission:

> *Scope and standard of review.*—Section 516A clearly defines the scope and standard of review in suits challenging antidumping and countervailing determinations and orders. *Currently, the state of the law in this area is unclear and conflicting.*

> Subsection (b) of new section 516A sets forth the standard of review for those antidumping and countervailing duty determinations which will now be reviewable. *Under present law, determinations made by the International Trade Commission have been set aside only where found to be arbitrary or contrary to law.* * * * [Italic added.]

See also *Bowman Transportation, Inc.* v. *Arkansas-Best Freight System, Inc., et al.*, 419 U.S. 281, 285–86 (1974), *reh. denied*, 420 U.S. 956 (1975); *Citizens to Preserve Overton Park, Inc., et al.* v. *Volpe, Secretary of Transportation, et al.*, 401 U.S. 402, 416 (1971); Metzger & Musrey, "Judicial Review of Tariff Commission Actions and Proceedings," 56 Cornell L. Rev. 285, 320–30 (January 1971).

II

Congressional intent to provide a wide latitude within which the Commission may determine the existence or nonexistence of injury under the Antidumping Act is manifest from the absence in the statute of any legislative roadmap or compass respecting the indicia of injury.[6] Absent such congressional guidance, the Commission has itself employed a number of reasonable indicia of injury in its investigations. Among these indicia are the following: (1) Price depression of the impacted competitive products; (2) price suppression—e.g., although domestic production costs have increased, competition from LTFV imports precludes price increases; (3) market penetration by the LTFV imports; (4) documented lost sales of domestic manufacturers to the LTFV imports; (5) operation of domestic production facilities at less than normal capacity; (6) plant closures and unemployment; (7) foreign capacity to produce for export; (8) lost profits.

"Indicia used by the Commission to determine whether, in the absence of actual injury, an industry 'is likely to be injured' within the meaning of the Antidumping Act, 1921, include increasing LTFV imports and the capacity of the foreign exporters to continue to export in the same or larger volumes so that injury is imminent and not conjectural." See the questions and answers attached to the letter of Daniel Minchew, chairman, U.S. International Trade Commission, November 16, 1977, reproduced in *hearing before the Subcommittee on Trade, House Committee on Ways and Means, on the adequacy and the administration of the Antidumping Act of 1921* (95th

[6] Moreover, the broad investigatory discretion of the Commission in injury determinations was made clear by Congress in providing that the Commission could make its injury determination "after such investigation as it deems necessary." 19 U.S.C. 160(a) (1970). At the time of the investigation in this case, there was no requirement for any type of hearing, although hearings were in fact held on Aug. 20-23, 1974. The 1974 amendments to the Antidumping Act required for the first time that the Commission must hold a hearing when requested by the foreign manufacturer, the domestic importer, or any domestic manufacturer, producer, or wholesaler of the merchandise. 19 U.S.C. 160(d)(1) (1976). Hence, prior to the 1974 amendments, the Commission held hearings such as those in the present case, although it was not required to do so by the statute. Moreover, the Commission need not base its injury determination upon the record made at the hearing. *Pasco Terminals, Inc.* v. *United States*, 83 Cust., Ct.—, C.D. 4823, 477 F. Supp. 201 (1979).

Cong., 1st sess. at 62 (1977)). See also the separate Statement of Reasons of Commissioner Stern in *Certain Steel Wire Nails From Canada*, investigation No. AA1921–189, 44 F.R. 7840 at 7842 (1979).

It is apparent from the above-enumerated indicia that an injury determination in an antidumping case is multifaceted, and involves analysis of complex economic and financial data having an unique interrelationship in each particular case. From the Commission's statement of reasons in the present case, it appears that the Commission considered and carefully analyzed a number of pertinent economic and financial factors, including trends and levels of domestic industry shipments, exports, profits, prices, unfilled orders, and other relevant factors. Thus, in its statement of reasons, the Commission found (39 F.R. 38133):

First: The domestic and Japanese tools are different in that "[t]he domestic industry produces primarily forged tools, while the Japanese articles sold at less than fair value have been mostly cast or partly forged and cast."

Second: The markets in the United States for the domestic tools and the Japanese tools are different. On this aspect, the Commission found that:

> Hand tools, including the types found by the Treasury to have been sold at less than fair value, are sold in the United States in several differentiated markets—a market for higher priced, professional-quality tools of the types considered here serviced primarily by hardware stores; one for mid-priced, medium-quality tools serviced predominantly by department stores; and one for low-priced, low-quality tools serviced mostly by discount outlets, drug stores, and supermarkets. The bulk of the domestic tools (probably more than 75 percent) or sold in the market for professional tools, and most of the remainder in the market for medium-quality tools. In contrast, the Japanese tools sold at less than fair value are sold chiefly in the market for low-priced tools.
>
> Sales of tools in department stores, drug stores, supermarkets, and discount outlets are a relatively recent development, in contrast with the more traditional hardware store outlet. Sales in the new outlets comprise the fastest growing segment of the market. Several importers are credited with the development of this market through such innovative marketing devices as racking a full line of tools in blistered cards, which at the time of its introduction was untried by domestic handtool producers. The imported tools so marketed were generally of a lower quality and price than the traditional professional tools.

Third: "[D]omestic shipments of the tools involved increased consistently, being about 39 percent greater in 1973 than in 1971."

Fourth: "[E]xports of such tools by domestic producers increased from $28 million in 1971, to $37 million in 1973, and further to $27 million in the first half of 1974 (when they equalled imports)."

Fifth: During the period of investigation, demand for domestic products increased which "was reflected in higher unfilled orders, which rose from an approximate 3 to 4 months backlog at yearend 1971 to 5 to 6 months at yearend 1973."

Sixth: The Commission found no evidence of either price depression or price suppression of the domestic tools, and that the prices of the domestic tools rose at the same rate as other handtool prices.

Seventh: The average profitability of the domestic handtool industry was maintained during the period of the investigation (1971–73) Whatever reduced operating margins may have been experienced by the domestic industry was found to be caused primarily by increased raw material costs in a period of national price controls, and in one instance by a prolonged strike. The Commission could find no evidence of causality between the LTFV sales of the involved Japanese handtools and any decreased profit margins.

Eighth: Respecting the likelihood of injury, the Commission concluded:

> The evidence before the Commission indicates not only that the domestic industry has not been injured, but that there is no likelihood of injury within the terms of the antidumping statute. Domestic shipments of handtools were higher in the first half of 1974 than in the corresponding period of 1973, responding to increased domestic consumption. The prices of both the domestically produced and Japanese handtools involved have continued to rise, but the prices of the Japanese articles have increased more steeply than those of the domestic. The steeper price increase for the Japanese articles appears to have resulted mostly from rapidly rising Japanese costs, as well as the changes in the dollar-yen exchange rate.

That the Commission proceeded on a correct legal theory is evident from the following excerpt from the statement of reasons:

> The Antidumping Act, 1921, as amended, requires that the Tariff Commission find two conditions satisfied before an affirmative determination can be made. First, there must be injury, or likelihood of injury, to an industry in the United States, or an industry in the United States must be prevented from being established. Second, such injury or likelihood of injury or prevention of establishment of an industry must be "by reason of" the importation into the United States of the class or kind of foreign merchandise which the Secretary of the Treasury has determined is being, or is likely to be, sold at less than fair value (LTFV). [Footnote omitted.]

The separate statement of reasons for the negative determination of Commissioner Leonard explicitly details the lack of injury to the domestic industry, and therefore I have set out his reasons at length (39 F.R. 38134):

* * * * * * *

DIFFERENT MARKETS

The specified handtools from Japan sold, or likely to be sold, at LTFV generally are manufactured by different processes and are designed for a specific market that is not fully serviced by the bulk of the domestic tools. The Japanese and domestic tools, in many cases, are not alike. The specified handtool imports from Japan have been largely concentrated in the "do-it-yourself" household market which has not been supplied traditionally by U.S. producers. These tools are of lower quality and are relatively inexpensive. Over 90 percent of the specified handtools imported from Japan are distributed to the household market. This household market is serviced by retail outlets such as discount stores, supermarkets, and drug stores for sale to the occasional user or impulse buyer whose trade or profession does not involve the regular use of handtools. This market is generally characterized by its demand for lower priced handtools.

Domestic manufacturers traditionally have produced the specified handtools of high quality for professional use. The traditional markets for the bulk of the domestically produced specified handtools are independent distributors who sell to hardware stores and to department stores catering to tradesmen such as machinists, carpenters, plumbers, and general repairmen. In 1973, for example, over 75 percent of total domestic shipments were sold for such trade or professional use.

Moreover, domestic producers have alleged that they cannot manufacture profitably the lower quality, relatively inexpensive tools sold in the household market because of prevailing U.S. labor and materials costs. Distributors of the higher quality handtools generally buy comparatively small quantities of tools of Japanese origin and then only to supplement domestic product lines or for the purpose of providing tools for immediate delivery when domestic hand tools are in short supply. [Footnote omitted.]

Commissioner Leonard then commented (*id.*):

NO INJURY

Strong market demand for the specified handtools *of all qualities* is illustrated by the increase in apparent domestic consumption over the period 1970–73. In dollar terms, overall domestic consumption of the tools covered by this investigation were *66 percent larger in 1973* than in 1970. Consumption of *wrenches increased 76 percent*; *pliers, 26 percent*; *screwdrivers, 64 percent*; *and metal-cutting snips and shears, 58 percent.* Domestic shipments of the specified handtools rose because of increased demand. Domestic shipments of *wrenches increased 66 percent*; *pliers, 31 percent*; *screwdrivers, 66 percent*; *and metal-cutting snips and shears, 52 percent.* Thus, the increase over the period 1970–73 of domestic shipments of the specified handtools was similar to the increase in total consumption. Imports took a slightly larger share of consumption during this time, and whatever increase imports were able to register in their share of the market seems to have been due to the inability of the domestic producers to satisfy the increased demand.

Unfilled domestic orders for each type of tool increased in 1972 and, with the exception of screwdrivers, again in 1973. Inventories of domestic producers began to decline in 1973 as compared with 1972. The combined effect of increased shipments, increased backlogs of unfilled orders reported to the Commission by producers (confirming the claims of distributors), declining inventories and temporary shortages of component materials during 1973–74 resulted in lengthened delivery times for the specified domestic handtools and contributed to the demand for imported tools.

During the 1970–73 period, *U.S. exports of all these tools increased by about 44 percent.* Exports exceeded imports in 1970 and 1971 and again during the first 6 months of 1974. *Due to the increase in demand for the specified handtools, domestic producers have enlarged existing production facilities, undertaken new plant construction, and registered increases in man-hours of production-related workers for the years 1972 and 1973.*

There has been no price depression, as prices of the specified domestic handtools generally rose between 1971 and 1974. Similarly, there appears to be no evidence of price suppression. Prices for all industrial commodities advanced 7.9 percent from 1971 through 1973, with price advances for all handtools averaging 8.7 percent. In such a situation, it is difficult to conceive of any price suppression.

The lack of injury to the domestic industry is also reflected in its financial experience. As a share of net sales, *net operating profits of the domestic manufacturers* where the specified handtools were produced *averaged 11.8 percent in 1971, 12.9 percent in 1972,* and *11.8 percent in 1973.* Although profits in 1973 failed to increase with increased sales, rising material costs and price control regulation were at least in part responsible for the reduction. For the period 1971–73, the operating profit ratios for the domestic manufacturers of the specified handtools were equal to or better than other U.S industries. [Italic added.]

Continuing, Commissioner Leonard made the following observations concerning the likelihood of injury (*id.*):

NO LIKELIHOOD OF INJURY

For there to be likelihood of injury, there must be a realistic connection between a situation that presently exists and what will probably happen should the present situation continue. A trend that indicates future injury must be shown. Given the evidence developed in this investigation, such a connection, such a trend, cannot be made. It would be a flight of fancy to forecast injury to the domestic industry in the future based upon the information at hand.

Demand for the specified handtools as measured by apparent domestic consumption continued to increase in the first half of 1974 as compared with the first half of 1973, and so did domestic shipments. Prices of both the specified domestic and Japanese handtools have continued to increase. The two currency revaluations affecting the relationship between the dollar and the yen and

rapidly rising Japanese costs by the end of 1973 had substantially reduced price differentials between the specified domestic and Japanese handtools wherever they competed. During the 12-month period June 1973–June 1974, Japanese prices generally rose at a steeper rate than did U.S. prices for the specified handtools.

In summary, an analysis of the statements of reasons in the present case shows that the Commission considered reasonable criteria in determining whether injury, or the likelihood thereof, existed. The short of the matter is that the Commission found no harm to American industry by reason of the LTFV imports. As the Commission's statement of reasons indicates, American industry prospered during the period of the LTFV imports, viz, there were healthy trends in the industry's domestic shipments, exports, and average profitability. Moreover, the Commission found no price depression or suppression in the domestic industry. Whatever factors contributed to the reduced operating margins of some domestic producers were found to be purely domestic in origin; i.e., primarily increased raw material costs during a period of price controls, and a strike—*but not LTFV sales*. As further evidence of no injury, the prices for tools of the domestic industry and for all handtools rose at the same rate. Particularly significant is the fact that during the period of the Commission's investigation the domestic industry experienced great difficulty in filling all its orders. Plainly, an industry which is unable to meet rising demand, while at the same time shipping more merchandise, both domestically and for export, is not an industry being injured by imports. To the contrary, the Commission's findings amply demonstrate that the domestic industry was healthy, robust, and noninjured. The Commission's determination that there was no likelihood of injury is equally well founded. On that score, the Commission pointed to the continuing trend of increased domestic shipments, and it further noted that prices for the Japanese tools in question were rising at rates "more steeply than those of the domestic" (39 F.R. 38133).

III

Plaintiffs maintain that the Commission should have found from the record transmitted to the court that the LTFV pricing afforded a competitive advantage to the subject Japanese tools resulting in significant levels of market penetration of the imports accompanied by serious market disruption in the form of lost sales, preclusion from major domestic markets, restraints on investment in productive capacity, price suppression, decreased profit margins, and slowdowns in domestic shipments and production. Further, plaintiffs argue that the Commission's findings in support of its negative determination have

no rational basis in fact, are arbitrary, capricious and not supported by substantial evidence. Plaintiffs are particularly critical of the Commission's findings concerning the character of the U.S. market for the tools in question and the respective natures of the domestically produced tools and the imports sold at LTFV. These findings are relevant to the competitiveness of the LTFV imports with the domestically produced handtools. On this aspect, plaintiffs urge that had the Commission found that the LTFV imports competed directly with the domestic handtools, it would have been obligated to find injury as a matter of law.

I agree with the party-in-interest's contention that plaintiffs' arguments relating to the administrative record are directed, essentially, at discretionary findings by the Commission. As conceded by plaintiffs, it is not the function of the court in reviewing an injury determination of the Commission under the Antidumping Act to weigh the evidence or substitute its judgment for that of the Commission. *City Lumber Co., supra*, 59 CCPA at 92; *Imbert Imports, supra*, 60 CCPA at 126. Moreover, since the Commission based its determination on a consideration of appropriate indicia of injury, absent any clear error of judgment (and I find none), the Commission's determination cannot be regarded as arbitrary and capricious. *Bowman Transportation, Inc., supra*, 419 U.S. at 285–86; *Citizens to Preserve Overton Park, Inc., supra*, 401 U.S. at 416.

With reference to the limitation on the court's power to review the evidence before the Commission, the party-in-interest has called attention to *Deutsch* v. *United States Atomic Energy Commission*, 401 F. 2d 404, 407 (C.A.D.C. 1968), wherein the court of appeals made this relevant observation:

> We are urged to overrule the (Atomic Energy) Commission's holding that petitioner is not entitled to an award upon the ground that this conclusion is arbitrary and capricious and lacks substantial evidence in the record supporting or justifying this ruling. We were told, moreover, on oral argument that the factual basis for the Commission's holding is clearly and completely erroneous as a matter of scientific knowledge and phenomenon. The briefs and supporting documents filed by both parties are extensively devoted to presentation and argument as to the correctness, or the falsity of scientific principles related to radioactive material and products, atomic energy, irradiation, the nucleus of the atom and the action and reaction of its protons and neutrons. We are therefore confronted at the very threshold of this case with the ever-recurring question of the scope and extent of our authority to set aside the ruling of an administrative agency. Despite our daily diet of challenges to administrative agency action and our resulting repeated efforts to articulate the limits of judicial review of such actions we nevertheless are continually called upon to substitute our judgment on factual issues for that of the agency

> charged by Congress with the initial responsibility of making, evaluating, and acting upon those facts. *It is well settled that the factfinding function is within the exclusive province of the administrative agency.* We appear unable to establish a substantial recognition at the Bar that "*[t]he judicial function is exhausted when there is found to be a rational basis for the conclusions approved by the administrative body.*" *Rochester Telephone Corp.* v. *United States*, 307 U.S. 125, at 146, 59 S. Ct. 754, at 765, 83 L. Ed. 1147 (1939). [Italic added; footnote omitted.]

In light of the above-cited decisions, it would be impermissible for me to substitute my judgment for that of the Commission or to reweigh the evidence as to specific factual findings. After a careful and searching review of the administrative record, I hold: That the factual findings of the Commission have a rational basis in fact; that the Commission applied the proper legal standards; and that the Commission considered appropriate economic and financial factors in making its negative determination. Accordingly, the Commission's determination is not arbitrary or capricious, as claimed by plaintiffs.

IV

We now reach plaintiffs' contention that the Commission's injury determination is not supported by substantial evidence. As we have seen, the substantial evidence standard of review has been adverted to by the courts in reviewing the Commission's findings and determination under the Antidumping Act. See *City Lumber*, *supra*, 59 CCPA at 95; *Imbert Imports*, *supra*, 60 CCPA at 127; *Pasco Terminals, Inc.*, *supra*, 83 Cust. Ct. at—.

Consolo v. *Federal Maritime Commission et al.*, 383 U.S. 607 (1966) is a leading case defining "substantial evidence." There, the Supreme Court observed (at 619–20):

> * * * We have defined "substantial evidence" as "such relevant evidence as a reasonable mind might accept as adequate to support a conclusion." *Consolidated Edison Co.* v. *Labor Board*, 305 U.S. 197, 229. "(I)t must be enough to justify, if the trial were to a jury, a refusal to direct a verdict when the conclusion sought to be drawn from it is one of fact for the jury." *Labor Board* v. *Columbian Enameling & Stamping Co.*, 306 U.S. 292, 300. This is something less than the weight of the evidence, and *the possibility of drawing two inconsistent conclusions from the evidence does not prevent an administrative agency's finding from being supported by substantial evidence. Labor Board* v. *Nevada Consolidated Copper Corp.*, 316 U.S. 105, 106; *Keele Hair & Scalp Specialists, Inc.* v. *FTC*, 275 F. 2d 18, 21. [Italic added; footnote omitted.]

See also *Richardson, Secretary of Health, Education, and Welfare* v. *Perales*, 402 U.S. 389, 401 (1971).

Applying the above-quoted definition to the record herein, I find

that there is substantial evidence supporting the Commission's negative determination.[7] The fact that plaintiffs might be able to cite evidence in the record supporting conclusions inconsistent with those reached by the Commission does not mean that the Commission's determination is not supported by substantial evidence. Indeed, as pointed out in *Pasco Terminals. Inc., supra,* even if the Commission's determination were not one that the court would have reached had the question first arisen in judicial proceedings, the Commission's determination must be upheld if rational and not contrary to law. It is emphasized that in deciding whether the Commission's determination meets the substantial evidence test, the court does not look solely at the transcript of the public hearing and the public documents received by the Commission. The record before the Commission (and now before the court) comprises a number of confidential documents, the content of which may not now be divulged or discussed in this opinion. Nevertheless, both defendant and the party-in-interest have submitted an "accounting" of the evidence in the record supporting each of the factual findings of the Commission, and it suffices to state that I find the Commission's determination is clearly supported by substantial evidence.

V

As a further basis for overturning the Commission's determination in this case, plaintiffs urge that the Commission disregarded its own "precedents." Defendant and the party-in-interest, however, dispute that there is any inconsistency between the Commission's determination in the present case and its determinations in prior investigations. Moreover, defendant and the party-in-interest contend that the Commission's injury investigations are *sui generis,* and therefore injury must be decided by the Commission on a case by case basis. I agree.

Simply because a particular fact involved in a prior case is involved in the present investigation does not mean that the determination in the prior case is binding on the Commission in the present investigation. Plainly, in view of the unique combination and interaction of many economic variables presented in injury investigations, determinations in prior cases are of very limited guidance in future cases. This concept was well articulated by former Deputy Assistant Secretary of the Treasury James Pomeroy Hendrick in his article, "The U.S. Antidumping Act," 58 American Journal of International Law, 914, 924 (1964):

> * * * The Tariff Commission, unlike American courts of law, is not bound by its own precedents. Even if it were, one must recognize that it is seldom that two cases are found which are truly alike. The elements may be similar, but often enough there can be subtle differences, apprehended only after careful study of

[7] This is not to imply that the Commission's determination must meet the "substantial evidence" test.

> the entire record, which justify an injury decision in one and a no-injury decision in the other case. * * * Most cases have more than one element present, so that the decisions can very well depend upon a combination of elements rather than any single one at any time here mentioned.

Similarly, Assistant Secretary of the Treasury Kendall, testifying before the House Ways and Means Committee in 1957, expressed much the same thought when he stated:

> To try to define "injury" is very much like trying to define precisely some of the phrases of the common law or of equity where the court's tradition may and should come to its judgment by weighing all of the factors in balance; and in any one case the balance may be very different from that of another. Injury to a large corporation or to the owner of a chain of stores may be very different from injury to the corner grocer. Injury to one industry may be very different from injury to another. Under the same set of facts mathematically opposite conclusions or differing conclusions could be drawn. These are questions of economics, not sensitive to either exact science or to predetermined close lines or channels of thought [Hearings on H.R. 6006, 6007 and 5120 at 44–45, 85th Cong., 1st sess. (1957).]

In a word, the fact that the Commission found injury in another case, bears no relevance to whether injury should have been found in the instant case, absent proof of *identity of all factors*.

Further militating against the binding effect of prior determinations by the Commission in antidumping investigations is the circumstance that prior to the Trade Act of 1974, Public Law No. 93–618, the Commission was "under no obligation either to disclose all of the evidence in its possession nor to state in meticulous detail exactly on what basis it applies that evidence in determining injury or likelihood thereof." *City Lumber Co., supra*, 59 CCPA at 95.[8] Simply put, and as previously mentioned, in antidumping investigations the Commission receives substantial amounts of confidential and sensitive information that cannot be disclosed to the general public.

VI

Finally, plaintiffs have devoted an extensive portion of their memorandum to the subject of the quantum of injury required to make an affirmative injury determination. On this point, the proposition urged by plaintiffs is that the injury test was not intended by Congress to be a rigorous one, and "more than *de minimis*" injury is sufficient for a finding of dumping. Respecting the quantum of injury required for

---

[8] In the Trade Act of 1974, Congress provided that the Commission, upon making its determination, "shall publish in the Federal Register such determination, whether affirmative or negative, together with a complete statement of findings and conclusions, and the reasons or bases therefore, on all the material issues of fact or law presented (consistent with confidential treatment granted by the * * * Commission, * * * in the course of making its determination)." See 19 U.S.C. 160(d) (2) (1976).

purposes of the Antidumping Act, the Senate Finance Committee commented in connection with the Trade Act of 1974 (S. Rept. No. 93–1298, 93d Cong., 2d sess. at 180 (1974)):

> * * * Under the Antidumping Act, the Commission determines whether a domestic industry "is being or is likely to be injured, or is prevented from being established, by reason of the importation of" the less-than-fair-value imports. The term "injury," which is unqualified by adjectives such as "material" or "serious," has been consistently interpreted by the Commission as being that degree of injury which the law will recognize and take into account. Obviously, the law will not recognize trifling, immaterial, insignificant, or inconsequential injury. Immaterial injury connotes spiritual injury, which may exist inside of persons not industries. Injury must be a harm which is more than frivolous, inconsequential, insignificant, or immaterial.
>
> Moreover, the law does not contemplate that injury from less-than-fair-value imports be weighed against other factors which may be contributing to injury to an industry. The words "by reason of" express a causation link but do not mean that dumped imports must be a (or the) principal cause, a (or the) major cause, of a (or the) substantial cause of injury caused by all factors contributing to overall injury to an industry.

The foregoing Senate Finance Committee report makes it evident that Congress intended the term "injury" under the Antidumping Act to be construed as something "more than *de minimis*" injury. However, I can perceive of no quantum issue in this case, inasmuch as the Commission's negative determination was not based upon a finding of *de minimis* injury. In point of fact, the Commission found no injury whatsoever. Consequently, I see nothing in plaintiff's "more than *de minimis*" construction of the term "injury" that militates against the Commission's negative determination in the present case.

CONCLUSION

For the foregoing reasons: Plaintiff's motion for summary judgment is denied; defendant's and party-in-interest's cross-motions for summary judgment are granted; and the action is dismissed.

(C.D. 4839)

MAJESTIC ELECTRONICS, INC., PLAINTIFF *v.* UNITED STATES, DEFENDANT

Wigs and Other Products of Human Hair

Consolidated Court No. R66/12103

Merchandise consisting of wigs and other products of human hair, imported from Italy between 1964 and 1967, was appraised

on the basis of export value as defined in section 402(b) of the Tariff Act of 1930, as amended. Plaintiff's claim that the correct dutiable values were the invoice unit values, as entered, and not the appraised values, overruled.

BURDEN OF PROOF

It is well established that plaintiff, in challenging the appraised values, must (1) overcome the presumption of correctness attaching to the appraised values and (2) establish the correct value by proper evidence. 28 U.S.C. 2635(a); *Andy Mohan, Inc.* v. *United States*, 396 F. Supp. 1280, 74 Cust. Ct. 105 (1975), *aff'd*, 537 F. 2d 516, 63 CCPA 104 (1976); *C. S. Emery & Co.* v. *United States*, 73 Cust. Ct. 84, C.D. 4557 (1974).

SAME—FAILURE OF PROOF

Where the plaintiff importer rebuts the presumption of correctness attaching to the appraised values, but fails to establish the correctness of the claimed values, the appeals for reappraisement are dismissed with the appraised values remaining in effect. *Millmaster International, Inc.* v. *United States*, 427 F. 2d 811, 57 CCPA 108, *modified on other grounds*, 429 F. 2d 985, 57 CCPA 114 (1970).

EXPORT VALUE—SUCH OR SIMILAR MERCHANDISE

Where wigs and other products of human hair were made to importer's specifications and differed from all othe rwigs and products of human hair in mix of hair types, length, and weight of hair, quality of materials, whether machine made, handmade or hand finished, they were not such as or similar to other such merchandise of the manufacturer.

EXPORT VALUE—SELECTED PURCHASER

Plaintiff cannot be considered a selected purchaser where there is no showing that sales of merchandise were restricted to plaintiff and no offers were made for sale to all purchasers at wholesale. *Aceto Chemical Co.* v. *United States*, 51 CCPA 121, C.A.D. 846 (1964).

EXPORT VALUE—FREELY OFFERED FOR SALE

Where plaintiff is not a selected purchaser, determination of the price of merchandise by arm's length negotiation between exporter and purchaser does not establish that the merchandise was freely offered for sale to all purchasers at wholesale for exportation to the United States at such prices.

[Judgment for defendant.]

(Decided January 30, 1980)

Stein, Shostak, Shostak & O'Hara, Inc. (*John N. Politis* at the trial; *Theo B. Audett* on the briefs) for the plaintiff.

Alice Daniel, Assistant Attorney General; *David M. Cohen*, Director, Customs Litigation Branch (*Velta A. Melnbrencis* at the trial and on the briefs), for the defendant.

RE, Chief Judge: In this case, consisting of 27 appeals for reappraisement, the question presented pertains to the correct dutiable value of certain wigs and other products of human hair imported from Italy between 1964 and 1967. The merchandise was manufactured by Italwig S.A.S. of Rome, Italy (Italwig), and was purchased by the plaintiff, Majestic Electronics, Inc. (Majestic), which later changed its name to Brentwood Industries.

Based on the price of "such or similar" merchandise, it was appraised on the basis of export value as defined in section 402(b) of the Tariff Act of 1930, as amended by the Customs Simplification Act of 1956 (19 U.S.C. 1401a(b)), at unit values higher than the invoice unit values, as entered.

Plaintiff agrees that export value as defined in section 402(b) of the Tariff Act of 1930, as amended, is the correct basis of appraisement, but contends that the invoice unit values, as entered, represent the correct export value. Plaintiff urges, alternatively, that, if it is determined to be a selected purchaser within the meaning of section 402(f), Tariff Act of 1930, as amended, the invoice unit values represent the prices which fairly reflect the market value of the merchandise.

The question presented, therefore, is whether plaintiff has succeeded in establishing that the invoice unit values, as entered, are the correct export values for the imported merchandise. After careful consideration of the testimony of plaintiff's witnesses and the entire record, it is the determination of the court that plaintiff has failed to bear its burden of proof, and these appeals for reappraisement are therefore dismissed.

At the trial, Mr. Herman Krissman, vice president of Majestic during the period in question, testified as to the facts which pertain to the purchase of the imported merchandise. As vice president of Majestic, Mr. Krissman visited Italy regularly to purchase wigs and other products of human hair. Although he visited approximately 10 manufacturers in Italy between 1964 and 1967, and purchased from 4 companies other than Italwig, the great majority of his purchases were from Italwig. With the exception of the first purchase in December 1964,[1] none of the merchandise purchased from Italwig was from existing stock but, rather, had to be made to Majestic's specifications. Majestic's first purchase, which was from Italwig's existing stock, was made to provide Italwig with additional working capital.

The price for all purchases by Majestic from Italwig was determined by arm's length negotiation based on the cost of production plus profit. The cost varied and depended upon the quality of the materials used, and whether the article was hand tied or machine made. Hand-

[1] Entry No. 107666 in court No. R66/15376. At trial, and in its post-trial briefs, plaintiff mistakenly referred to this entry as entry No. 710666. In plaintiff's reply brief, it is correctly identified as entry No. 107666.

tied wigs of Italian hair were the most expensive articles, and machine-made wigs of Oriental hair were the least expensive.

Mr. Giovanni Borghese, general manager of Italwig, negotiated the prices of the merchandise at issue with Mr. Krissman. Mr. Borghese, an Italian citizen who testified in English, described the negotiation process and the manufacturing process. Mr. Borghese corroborated Mr. Krissman's testimony that prices were determined by arm's length bargaining, and that they represented their respective companies in these negotiations. The price for all the merchandise purchased by Majestic, including the first order, was negotiated by the parties. Mr. Borghese testified that he negotiated the price for most sales for exportation to the United States. The degree or amount of negotiation, however, depended on the size of the orders.

Although the defendant introduced an Italwig pricelist, dated June 1, 1966, as defendant's exhibit A, Mr. Borghese stated that he did not have formal printed pricelists. He explained that the pricelists were only for whatever merchandise Italwig had in its showroom at the time. He stated that although some small orders were at list prices, the pricelist was used as a beginning point for the negotiation process. Although the pricelist would change to reflect the models Italwig had in its showroom, it never contained a list of models Italwig would manufacture at stated prices.

Mr. Borghese explained that prices would vary depending on the quality of materials and the construction of the specific article. According to Mr. Borghese, the qualities of hair varied, and there was a great difference in price among the various types of hair. The price of a wig would also depend upon the color desired since the lighter colors required more processing, and hence were more expensive.

Mr. Borghese also stated that there was a great difference in price between hand-tied and machine-made hair products. The price not only reflected the quality of the product, but also the amount of labor required to complete it. As an illustration, Mr. Krissman testified that although it would take 16 hours or more for one worker to produce a single hand-tied wig, at least 10 wigs could be machine made by one worker in a single day.

The merchandise in issue, purchased by Majestic from Italwig, consists of various models of products of human hair, including wigs, a fall, and a wiglet. Mr. Borghese corroborated Mr. Krissman's testimony that, with the exception of Majestic's first order, all articles were specially produced to Majestic's specifications.

Mr. Borghese testified that there were considerable differences between the merchandise Italwig manufactured for Majestic, and that which it manufactured for other customers for export to the United

States. The testimony is conflicting as to what merchandise the witness considered "similar" to the merchandise sold to Majestic. On cross-examination, he stated that the articles sold to Majestic were "similar" to items on an Italwig pricelist. He stated that he understood "similar" merchandise to be of the same specifications as to hair quality, color, and construction. He made it clear, however, that although he considered products with the same specifications to be "similar", there was a "very considerable difference" as to the actual product. As an example, Mr. Borghese stated that although the wiglet model sold to Majestic was similar in specifications to one sold to another customer, it was "an entirely different article." The wiglet for Majestic would not be acceptable to Italwig's other customers, and the model for other customers would not be acceptable to Majestic. Mr. Borghese stated that wigs with the same specifications could be "similar" although they would have entirely different values depending on the processing. Mr. Borghese did not testify as to the similarity of merchandise based on the statutory definition of similar merchandise contained in section 402(f) of the Tariff Act of 1930, as amended.

Mr. Borghese also testified that Italwig's prices were generally determined by negotiation on the basis of cost of production. Small orders were generally made at list prices. He stated that the order would have to be beyond a certain quantity before he would negotiate. Although there was no strict rule as to volume determining price, he admitted that prices were lower for volume purchasers.

Except for a small number of missing invoices, which Mr. Borghese could not account for, defendant introduced a complete record of Italwig's sales for the years 1964 to 1967.

Defendant called no witnesses at trial, but introduced two exhibits. Defendant's exhibit A is an Italwig pricelist dated June 1, 1966, and numbered 3, which contains none of the model names of the merchandise in issue. Defendant's exhibit B is a copy of Bureau of Customs foreign agent's report 3–158, dated August 25, 1965. In the report, Customs Representative James A. Amoroso described his visit to the offices of Italwig in Rome, Italy, and his interview with Mr. Borghese on August 20, 1965. Among other things, Mr. Borghese stated that the relationship between Majestic and Italwig was buyer and seller, and that sales were made outright. Mr. Borghese estimated that approximately 75 percent of Italwig's production was sold to Majestic, and that all sales were made on the basis of bargaining. As one of the exhibits to the report, Mr. Amoroso attached a copy of an Italwig pricelist dated August 2, 1965, which differed from defendant's exhibit A. This list contained prices of three of the models of wigs bought by

Majestic. Next to the list price, Mr. Borghese wrote the price that Majestic paid for the merchandise.[2]

Plaintiff contends that, under the statutory definition of export value, it has established that the invoice unit values, as entered, are the proper dutiable values. In the alternative, plaintiff contends that if it is found to be a selected purchaser, then the invoice unit values, as entered, fairly reflect the market value of such merchandise.

Export value is defined in section 402(b), Tariff Act of 1930, as amended, as follows:

> "(b) EXPORT VALUE.—For the purposes of this section, the export value of imported merchandise shall be the price, at the time of exportation to the United States of the merchandise undergoing appraisement, at which such or similar merchandise is freely sold or, in the absence of sales, offered for sale in the principal markets of the country of exportation, in the usual wholesale quantities and in the ordinary course of trade, for exportation to the United States, plus, when not included in such price, the cost of all containers and coverings of whatever nature and all other expenses incidental to placing the merchandise in condition. packed ready for shipment to the United States."

Section 402 also defines terms used in the statutory definition of export value. The pertinent definitions, found in section 402(f), Tariff Act of 1930, as amended, are as follows:

> (f) DEFINITIONS.—For the purposes of this section—
>
> (1) The term "freely sold or, in the absence of sales, offered for sale" means sold or, in the absence of sales, offered—
>
> (A) to all purchasers at wholesale, or
>
> (B) in the ordinary course of trade to one or more selected purchasers at wholesale at a price which fairly reflects the market value of the merchandise,
>
> without restrictions as to the disposition or use of the merchandise by the purchaser, except restrictions as to such disposition or use which (i) are imposed or required by law, (ii) limit the price at which or the territory in which the merchandise may be resold, or (iii) do not substantially affect the value of the merchandise to usual purchasers at wholesale.
>
> * * * * * * *
>
> (4) The term "such or similar merchandise" means merchandise in the first of the following categories in respect of which export value * * * can be satisfactorily determined:

---

[2] Defendant's exhibits A and B were admissible into evidence under the terms of 28 U.S.C. 2635(b) which provides:

"(b) Where the value of merchandise is in issue:

(1) Reports or depositions of consuls, Customs officers, and other officers of the United States and depositions and affidavits of other persons whose attendance cannot reasonably be had, may be admitted in evidence when served upon the opposing party in accordance with the rules of the court.

(2) Pricelists and catalogs may be admitted in evidence when duly authenticated, relevant, and material."

(A) The merchandise undergoing appraisement and other merchandise which is identical in physical characteristics with, and was produced in the same country by the same person as, the merchandise undergoing appraisement.

(B) Merchandise which is identical in physical characteristics with, and was produced by another person in the same country as, the merchandise undergoing appraisement.

(C) Merchandise (i) produced in the same country and by the same person as the merchandise undergoing appraisement, (ii) like the merchandise undergoing appraisement in component material or materials and in the purposes for which used, and (iii) approximately equal in commercial value to the merchandise undergoing appraisement.

(D) Merchandise which satisfies all the requirements of subdivision (C) except that it was produced by another person.

(5) The term "usual wholesale quantities," in any case in which the merchandise in respect of which value is being determined is sold in the market under consideration at different prices for different quantities, means the quantities in which such merchandise is there sold at the price or prices for one quantity in an aggregate volume which is greater than the aggregate volume sold at the price or prices for any other quantity.

The statutory presumption of correctness attaching to the appraiser's finding of value requires the plaintiff to establish, by competent satisfactory evidence, that the appraised values were erroneous. (28 U.S.C. 2633 (1964), superseded by 28 U.S.C. 2635(a) (1976).) It is also incumbent upon plaintiff to establish that such or similar merchandise was freely sold or, in the absence of sales, offered for sale to all purchasers at wholesale in the principal markets of Italy in the usual wholesale quantities and in the ordinary course of trade for exportation to the United States at the alleged invoice unit values, as entered. *C. S. Emery & Co.* v. *United States*, 73 Cust. Ct. 84, 88, C.D. 4557 (1974). See also *Andy Mohan, Inc.* v. *United States*, 396 F. Supp. 1280, 1282, 74 Cust. Ct. 105, 107, *aff'd*, 537 F. 2d 516, 63 CCPA 104 (1976).

The first aspect of plaintiff's burden of proof requires that plaintiff overcome the presumption of correctness which attaches to the appraiser's findings of value.

Majestic's first order with Italwig included Italwigs, 100 percent Italian hair, handmade wigs, from Italwig's stock. This item appeared on the Italwig pricelist, defendant's exhibit A, at $60 to $90 depending on color, for quantities of 25 to 100, $54 to $81 for quantities of over 100 to 500, and $49.25 to $64.25 for quantities over 500. This item

was sold to other customers of Italwig at list prices. It is clear that Customs properly appraised this first order, entered as entry No. 107666.

Majestic's subsequent orders of Italwigs were not 100 percent Italian hair, as in the first order, but were of a mixture of Italian and other human hair to Majestic's specifications. Mr. Borghese testified that the Italwigs made to Majestic's specifications were not the same as any other product Italwig manufactured. He also testified that Majestic's Italwig differed greatly from other wigs Italwig manufactured. Only the Italwig of the first sale appeared on Italwig's pricelist. The appraiser, therefore, was incorrect in appraising the Italwigs of mixed hair of the later sales on the basis of the Italwig of the first sale.

Sales of "B/Italwigs" (Brentwood Italwigs), hand tied of 100 percent human hair, were made by Italwig to customers other than Majestic although they were made to Majestic's specifications. Italwig's invoices for 1965 reveal that there were four shipments of this model to Todd Imports of Portland, Oreg. It is unclear, however, whether each of these shipments constitutes a single order or separate orders. Mr. Borghese's testimony does not reveal, and there is no way of determining, whether a specific invoice represented an order or a shipment. Plaintiff argues that these sales were small sales, and that the B/Italwig, hand tied of 100 percent human hair, was sold in significant quantities only to Majestic. If, by this argument plaintiff contends that the sales to Todd Imports were not in usual wholesale quantities, it has failed to demonstrate what are the usual wholesale quantities.

The sales to Todd Imports were at the prices listed on Italwig's pricelist attached as an exhibit to the Bureau of Customs foreign agent's report, defendant's exhibit B. This was the price which the appraiser found to be the value of the B/Italwig imported by Majestic in the present case.[3] In light of the sales of the B/Italwig to Todd Imports at the list price, and in light of the pricelist itself, plaintiff has failed to overcome the presumption of correctness attaching to the appraiser's finding of value of the B/Italwig, hand tied of 100 percent human hair.

Majestic also purchased from Italwig a B/Italwig, machine made, 100 percent human hair. This item was also on the pricelist attached to the Bureau of Customs foreign agent's report. Italwig's invoices, as introduced by plaintiff, reveal only one sale of this item to a purchaser other than Majestic. There was a sale of one machine-made B/Italwig to Todd Imports. Whether or not that sale can be considered

[3] B/Italwigs (Brentwood Italwigs), handmade, were also included in entry No. 107666 covering Italwigs which were 100 percent Italian hair. The B/Italwigs, as well as various products invoiced to Majestic and other purchasers as 100 percent human hair, did not consist of 100 percent Italian hair.

to be in the usual wholesale quantity, inclusion of the machine-made B/Italwig on the pricelist supports the appraiser's finding of value. The plaintiff has also failed to overcome the presumption of correctness attaching to the appraiser's finding of value as to the B/Italwig, machine made of 100 percent human hair.

In addition to the sales to Todd Imports of the B/Italwig, hand tied and machine made of 100 percent human hair, sales also were made of the Italwig, hand tied of 100 percent Italian hair, to customers other than Majestic based on the pricelist attached to exhibit B. In the absence of sales, the pricelist establishes, therefore, the freely offered price for the specified merchandise.

Majestic also purchased an item that appeared on the invoices merely as Christina 500. The testimony is not clear whether this item is a wig or a fall. When asked what is a Christina 500 machine made, Mr. Krissman inquired whether the invoice said machine-made wig. When informed that it listed the item as just Christina 500, the witness determined that it was a fall. Mr. Borghese, on the other hand, testified on direct examination that he thought the Christina 500 was a wig. He was unable to determine this from the name itself, and had to rely on the prices listed on the invoice to determine whether it was a wig or a fall. Since plaintiff's witnesses cannot agree on the nature of the merchandise, plaintiff has failed to rebut the presumptively correct finding of value of the appraiser as to the Christina 500.

The remainder of the imported merchandise in this action does not appear on any Italwig pricelist. Defendant's responses to plaintiff's first interrogatories reveal that these articles were valued on the basis of being "such" as articles that appeared on Italwig's pricelists, or "such" as articles not appearing on an Italwig pricelist, but sold to customers other than Majestic.

Defendant's responses to plaintiff's first interrogatories show that the Roman wig sold to Majestic by Italwig, a hand-tied wig of Oriental hair, was appraised on the basis of being "such" as the B/Italwig hand-tied wig sold to Majestic and the Katy wig sold to Edith Imre Hair Fashions, Inc. of New York. Except that all three wigs were hand tied of rather long hair, the wigs were not the same. According to the uncontradicted testimony of plaintiff's witnesses, the wigs differed not only in length, but also in weight and in hair type. Since the Roman wig differed considerably from the B/Italwig and the Katy wig, this item was incorrectly appraised by Customs.

An item appearing on the invoices as Wiglet C was sold to Edith Imre Hair Fashions, Inc., and to Sallee Imports, Inc. of Oakland, Calif., at prices higher than those paid by Majestic. Mr. Borghese's testimony revealed differences among the wiglets sold to these three purchasers. Edith Imre Hair Fashions, Inc., required the front rows

of hair to be hand knotted, and the wiglet came in a four-color box with a comb and bow. Although Sallee Imports, Inc., did not require the front rows to be hand knotted, the wiglet came in fancy packaging with a scarf. This wiglet also had about two more ounces of hair than Majestic's wiglet. In contrast, the Wiglet C purchased by Majestic had no hand knotting, and came in a plain poly bag without any accessories. Mr. Borghese pointed out that, because Majestic accepted the wiglet without accessories and fancy packaging, the Wiglet C cost Majestic less. Therefore, it was incorrect for the appraiser to value the Wiglet C sold to Majestic as "such" as the Wiglet C sold either to Edith Imre Hair Fashions, Inc., or to Sallee Imports, Inc.

Defendant's responses to plaintiff's first interrogatories reveal that the Monica fall and the Gioia wig were appraised on the basis of such merchandise. Defendant, however, was unable to provide information for sales of merchandise such as the Gioia wig and Monica fall. Mr. Borghese testified without contradiction that these two items were sold exclusively to Majestic, and were not similar to any other article sold by Italwig. Italwig sold an item known as Monica to Edith Imre Hair Fashions, Inc., but that item was a wig and not a fall. The Gioia was a shorty wig made from the combings left over from the manufacture of other wigs and falls. As defendant introduced no evidence of sales or offers for sale of merchandise such as the Monica fall and the Gioia wig, plaintiff's evidence overcomes the presumption of correctness attaching to the appraiser's finding of value.

In summary, plaintiff has failed to overcome the presumption of correctness attaching to the appraiser's findings of value as to the first order of Italwigs, and as to all orders of the B/Italwig hand tied, the B/Italwig machine made, and the Christina 500. The appraiser's findings of value as to these items of merchandise are, therefore, affirmed.

The plaintiff has overcome the presumption of correctness attaching to the appraiser's findings of value as to the Roman wig, the Wiglet C, the Monica fall, the Gioia wig, and all the Italwigs expect those in entry No. 107666. In rebutting the presumption of correctness as to these items of merchandise, plaintiff has met only part of its dual burden of proof. To prevail upon its contention that the invoice unit values, as entered, represent the proper dutiable value, plaintiff must establish that such or similar merchandise was freely sold or, in the absence of sales, offered for sale in the principal markets of the country of exportation, in the usual wholesale quantities and in the ordinary course of trade, for exportation to the United States at the invoice unit values, as entered. *Andy Mohan, Inc.* v. *United States*, 396 F. Supp. 1280, 74 Cust. Ct. 105 (1975), *aff'd*, 537 F. 2d 516, 63 CCPA 104 (1976); *Millmaster International Inc.* v. *United States*, 427 F. 2d

811, 57 CCPA 108, *modified on other grounds*, 429 F. 2d 985, 57 CCPA 114 (1970).

The record contains no evidence that during the period in question such or similar merchandise was actually sold or offered for sale at the invoice unit values, as entered.

Mr. Borghese's testimony indicates that Italwig did not sell merchandise that was "such or similar" to any customer other than Majestic, "except in small quantities, and in areas different than the California area." The sales to other customers referred to the B/Italwig sold to Todd Imports of Portland, Oreg. On this testimony, plaintiff's claim is based on *offers* for sale since none of the merchandise remaining in issue (Roman wig, Wiglet C as sold to Majestic, Monica fall, Gioia wig, and the remaining Italwigs) was sold to customers other than Majestic. In the absence of sales, section 402(b) requires that export value be determined on the basis of the price at which such merchandise is freely offered for sale. See *Aceto Chemical Co.* v. *United States*, 51 CCPA 121, C.A.D. 846 (1964); *United States* v. *Thomas P. Gonzalez Corp.*, 66 Cust. Ct. 597, A.R.D. 283 (1971); *Louis Goldey Co.* v. *United States*, 55 Cust. Ct. 759, A.R.D. 196 (1965).

The record in the case at bar does not support plaintiff's alternative claim with respect to the selected purchaser provision within the meaning of section 402(f)(1)(B) of the Tariff Act of 1930, as amended. Both Mr. Krissman and Mr. Borghese testified that there was no agreement between Majestic and Italwig whereby Italwig would sell only to Majestic in the United States. Mr. Borghese stated that he did not like selling the same merchandise that he sold to Majestic to other customers in California. This was Mr. Borghese's personal choice, however, for as conceded, Italwig was not tied to Majestic by a contract of exclusivity. Selected purchasers at wholesale are those designated and selected by the seller as purchasers to whom the seller restricts its sales to the exclusion of all other purchasers at wholesale. *Aceto Chemical Co.* v. *United States*, 51 CCPA at 127; *Picker Corp.* v. *United States*, 68 Cust. Ct. 276, 283, R.D. 11768 (1972), *aff'd*, 75 Cust. Ct. 171, A.R.D. 323 (1975); *H. M. Young Associates, Inc.* v. *United States*, 60 Cust. Ct. 842, 850, R.D. 11517 (1968).

Since Italwig did not restrict the sales of its merchandise to Majestic, Majestic is not a selected purchaser. Consequently, export value may not be predicated solely on the basis of the price paid for the imported merchandise. *Mitsubishi International Corp.* v. *United States*, 72 Cust. Ct. 34, C.D. 4501 (1974); *Agricolas de Mexico, S. de R.L. de C.V.* v. *United States*, 66 Cust. Ct. 612, A.R.D. 285 (1971). In this case, therefore, there must be evidence that the claimed prices, as represented by the invoice unit values, were the prices at which the merchandise

was freely offered to all purchasers at wholesale during the period in question.

The record contains no proof whatsoever of offers of such or similar merchandise to other purchasers at wholesale. Hence, plaintiff's claim that export value of the imported merchandise is represented by the invoice unit values, as entered, must fail.

There are several means by which the freely offered price can be established. Ordinarily, a freely offered price can be established by a manufacturer's pricelist that is freely circulated in the trade. *Judson Sheldon International Corp.* v. *United States*, 51 Cust. Ct. 374, R.D. 10586 (1963), *aff'd*, 54 Cust. Ct. 773, A.R.D. 183 (1965); *Sanford Steel Pipe Products Co.* v. *United States*, 383 F. Supp. 837, 73 Cust. Ct. 155 (1974). The only pricelists introduced into evidence in this action were introduced by defendant. Those pricelists do not include the merchandise still in issue. Mr. Borghese testified that the pricelist was only the departure point for negotiations between the customer and Italwig which usually determined the price. Only in the case of "small volume" purchasers were sales at list price. Additionally, a pricelist was maintained only for those articles that were displayed in Italwig's showroom, which did not represent the full line of products Italwig was capable of manufacturing, and had manufactured in the past.

In the absence of pricelists, other means were available to plaintiff to prove the freely offered price. Some examples include prices contained in catalogs, letters, telegrams, records of price negotiation, and other communications between Italwig and potential customers. *Sanford Steel Pipe Products Co.* v. *United States*, 383 F. Supp. 837, 73 Cust. Ct. 155 (1974). Plaintiff presented no such evidence to the court. Its evidence was restricted to demonstrating that Majestic freely negotiated prices in arm's length negotiations with Italwig, representing the actual cost of manufacture, plus an amount to cover Italian taxes and manufacturer's profit.

Plaintiff contends that "(i)t is a long established principle that *bona fide* arm's length transactions between unrelated parties are sufficient to establish export value," and relies on *Ernest Lowenstein, Inc.* v. *United States*, 425 F. Supp. 856, 78 Cust. Ct. 169 (1977), *aff'd*, 451 F. Supp. 988, 80 Cust. Ct. 211 (1978) and *J. L. Wood* v. *United States*, 505 F. 2d 1400, 62 CCPA 25 (1974).

Plaintiff's reliance on these cases is misplaced. Both the *Lowenstein* and *Wood* cases dealt with the establishment of export value in the case of a *selected purchaser*. They refer to the means of proving a price that "fairly reflects market value," which establishes the export value element of "freely sold or, in the absence of sales, offered for sale." The language of these cases, that export value may be established by

prices negotiated in *bona fide* arm's length negotiations that establish a price fairly reflecting market value, is not applicable in the present action since Majestic is not a selected purchaser.

Recognizing that the *Lowenstein* and *Wood* cases dealt with selected purchasers, plaintiff submits that "there can be no valid reason for applying a more restrictive rule to the transactions in the case at bar." The reason, of course, is to be found in the specific provisions of the applicable statute. In other cases in which the plaintiff is not a "selected purchaser," the "freely sold or offered for sale" element is met by demonstrating that the merchandise is sold or offered for sale to *all purchasers at wholesale*. Section 402(f)(1). Indeed, section 402(f)(1) defines "freely sold or, in the absence of sales, offered for sale" in terms of sales or offers "(A) to all purchasers at wholesale, *or* (B) in the ordinary course of trade to one or more selected purchasers at wholesale at a price which fairly reflects the market value of the merchandise." [Italic added.] The statute expressly establishes *separate and different* standards in the case of selected purchasers, or all other wholesale purchasers. Proof of a price "which fairly reflects the market value of the merchandise" does not establish the price at which the merchandise is sold or offered to "all purchasers at wholesale."

Plaintiff's evidence, designed to show that the price to Majestic was determined by *bona fide* arm's length negotiation, may establish a price "which fairly reflects the market value of the merchandise," but it does not establish a price at which the merchandise is freely offered to all purchasers at wholesale. Citing *Superior Merchandise Co.* v. *United States*, 54 Cust. Ct. 781, A.R.D. 185 (1965), plaintiff asserts that the fact the price is determined through negotiation does not negate its use in finding export value, provided it otherwise meets the statutory requirements. The determinative words, however, are "provided it otherwise meets the statutory requirements" of export value. In the *Superior Merchandise Co.* case, glass bead necklets produced from "irregular" glass beads were offered at 19½ cents per dozen, plus packing. This offer was rejected since the cost, plus packing, would exceed 20 cents per dozen, the level at which the duty would almost double. The importer indicated that it would be interested if the price were below 20 cents per dozen, packed. Sales were made to the importer and others after the offering price was reduced to 18¼ cents per dozen, plus packing, or 19½ cents per dozen, packed, either price being below 20 cents per dozen. The court, in the *Superior Merchandise Co.* case, held that "[i]t may be that these offers arose originally out of negotiations and bargaining by Superior and (manufacturer), but if, as we find, offers at the same price were made generally to persons interested in buying the merchandise, this price was 'freely offered.'" 54 Cust. Ct. at 787.

In the present case, plaintiff presented no evidence of offers of "such or similar" merchandise to all purchasers at wholesale for exportation to the United States during the period in question. The negotiated price, represented in the invoice unit values, as entered, which plaintiff alleges to be the export value, does not "otherwise meet the statutory requirements of export value" as required by the *Superior Merchandise Co.* case.

Although plaintiff successfully rebutted the presumption of correctness attaching to the appraiser's findings of value as to the Italwigs, except for the first order, Roman wigs, Wiglet C, Monica falls, and the Gioia wigs, it failed to establish that the invoice unit values, as entered, represent the proper dutiable values as claimed. As to these items of merchandise, therefore, plaintiff's appeals for reappraisement are dismissed. Since plaintiff has failed to establish its claimed values, the appraised values remain in effect. *Millmaster International Inc.* v. *United States*, 427 F. 2d 811, 813–14, 57 CCPA 108, 110–11, *modified on other grounds*, 429 F. 2d 985, 57 CCPA 114 (1970).

In summary, the findings of value by the appraiser as to the first order of Italwigs, all orders of B/Italwigs, hand tied and machine made, and the Christina 500 are affirmed. As to the remaining merchandise, the Italwigs after the first order, the Roman wigs, the Wiglet C, the Monica falls, and the Gioia wigs, the appeals for reappraisement are dismissed with the appraised values remaining in effect. Judgment will be entered accordingly.

Decisions of the United States Customs Court

Abstracts

Abstracted Protest Decisions

DEPARTMENT OF THE TREASURY, *February 4, 1980.*

The following abstracts of decisions of the United States Customs Court at New York are published for the information and guidance of officers of the customs and others concerned. Although the decisions are not of sufficient general interest to print in full, the summary herein given will be of assistance to customs officials in easily locating cases and tracing important facts.

ROBERT E. CHASEN,
Commissioner of Customs.

DECISION NUMBER	JUDGE & DATE OF DECISION	PLAINTIFF	COURT NO.	ASSESSED	HELD	BASIS	PORT OF ENTRY AND MERCHANDISE
				Par. or Item No. and Rate	Par. or Item No. and Rate		
P80/20	Maletz, J. January 30, 1980.	J. Gerber & Co., Inc.	75-5-01097	Item 737.80 22%	Item 725.50 8%	Amico, Inc. v. U.S. (C.A.D. 1214)	New York Music boxes
P80/21	Maletz, J. January 30, 1980	J. Kinderman & Sons.	74-12-03518	Item 737.80 22%	Item 725.50 8%	Amico, Inc. v. U.S. (C.A.D. 1214)	Philadelphia Music boxes

DECISION NUMBER	JUDGE & DATE OF DECISION	PLAINTIFF	COURT NO.	ASSESSED	HELD	BASIS	PORT OF ENTRY AND MERCHANDISE
				Par. or Item No. and Rate	Par. or Item No. and Rate		
P80/22	Maletz, J. January 30, 1980	Shayne Knitwear, Inc.	77-7-01352	Item 382.58 37.5¢ per lb. + 20% (blouses and pants) Item 791.75 6% (vests)	Item 791.75 6% Dutiable as entireties on basis of export value; said value is invoice unit price	J. C. Penney Purchasing Corporation v. U.S. (C.D. 4671)	New York Ladies 3-piece sets; entireties
P80/23	Maletz, J. January 31, 1980	Shayne Knitwear, Inc.	76-3-00702	Item 382.78 25¢ per lb. + 32.5% (blouses and pants) Item 791.75 6% (jackets)	Item 791.75 6% Dutiable as entireties on basis of export value; said value is invoice unit price	J. C. Penney Purchasing Corporation v. U.S. (C.D. 4671)	New York Ladies 3-piece suits: entireties

Recent Unpublished Customs Service Decisions

The following listing of recent administrative decisions issued by the Office of Regulations and Rulings, U.S. Customs Service, and not otherwise published, is published for the information of Customs officers and the importing community. Although the decisions are not of sufficient general interest to warrant publication as Treasury decisions, the listing describes the issues involved and is intended to aid Customs officers and concerned members of the public in identifying matters of interest which recently have been considered by the Office of Regulations and Rulings.

A copy of any decision included in this listing, identified by its date and file number, may be obtained in a form appropriate for public distribution upon written request to the Office of Regulations and Rulings, attention: Legal Reference Area, room 2404, U.S. Customs Service, 1301 Constitution Avenue NW., Washington D.C. 20229. These copies will be made available at a cost to the requester of 10 cents per page. However, the Customs Service will waive this charge if the total number of pages copied is 10 or less.

Decisions listed in earlier issues of the Customs Bulletin, through October 24, 1979, are available in microfiche format at a cost of $15.10 (15 cents per sheet of fiche). It is anticipated that additions to the microfiche will be made quarterly and subscriptions are available. Requests for the microfiche now available and for subscriptions should be directed to the Legal Reference Area. Subscribers will automatically receive updates as they are issued and will be billed accordingly.

Dated: February 11, 1980.

SALVATORE E. CARAMAGNO
(For the Director, Office of
Regulations and Rulings).

Date of decision	File No.	Issue
1-22-80	104348	Carrier control: Application of the term "fixed structure" under the Outer Continental Shelf Lands Act to drilling rigs and platforms on the Outer Continental Shelf
1-23-80	104364	Vessel repair: Qualification of certain tugboats as special purpose vessels
12-20-79	104389	Vessels: Fee collection for vessel diversion
1-16-80	711259	Country of origin marking: Fine tip markers imported in bulk form and repackaged into sets
1- 9-80	711308	Country of origin marking: Metal eyeglass frames imported in assembled and plated condition
1-28-80	711361	Country of origin marking: Chinaware for use by airline in serving passengers
1-17-80	711364	Reliquidation: Whether the premature filing of a protest in the form of a letter is an error of law excluded from relief under 19 U.S.C. 1520 (c)(1)
1-16-80	711479	Country of origin marking: Whether tracing wheels need be marked if shrink-wrapped to a display card which bears the country of origin
1-17-80	711871	Country of origin marking: Solid state electronic watches assembled in Hong Kong that contain solid state modules assembled in Korea
1-23-80	711945	Country of origin marking: Replacement parts for agricultural implements
1-18-80	712011	Country of origin marking: Rail freight car truck side frames and truck bolsters
1-16-80	712013	Country of origin marking: Foreign-made wearing apparel which displays the marking "USA"
1-22-80	712170	Brokers: Whether an individual under the age of 21 may apply for a customhouse broker's license and take the qualifying examination
12-13-79	057796	Classification: Whether certain gloves for children for use in skiing qualify as ski equipment (705.86, 734.99)
12- 5-79	060419	Classification: Blue-mold cheese (117.00, 117.05)
1- 8-80	060565	Classification: Whether fabric with weft fibers omitted at intervals is advanced beyond fabric stage
1- 8-80	060780	Classification: Ski jacket with quilting stitching (382.04, 382.81)
1- 4-80	060789	Classification: Strap-like packing material composed of polyester filaments twisted into yarns
12- 8-79	060836	Classification: Whether straps on bikini constitute ornamentation (382.78)
12-19-79	060893	Classification: Rubber thread (711.55, 774.25)
12-11-79	060901	Classification: Thread wound on plastic spool (310.90, 310.91)
1- 8-80	060928	Classification: Cucumbers packed in brine solution (141.77, 141.81)
12-18-79	060929	Classification: Whether piping on denim jeans constitutes ornamentation

Date of decision	File No.	Issue
1- 7-80	060932	Classification: Window transfers (273.75)
1- 8-80	060942	Classification: Raincoat for infant (382.81)
1-28-80	060956	Classification: Chocolate (156.25, 156.30)
1-11-80	060962	Classification: Whether crochet shell edging ornaments bikini (382.00)
12-10-79	060972	Classification: Nylon food umbrella (386.09)
1-14-80	060974	Classification: Lock spray de-icer (432.00)
12-10-79	060976	Classification: Simulated corduroy (345.50)
12-13-79	061028	Classification: Gloves (705.85, 734.99, 735.05)
12-12-79	061390	Classification: Brad pins (646.25, 646.30)
1-28-80	061433	Classification: Whether certain patch pockets are ornamental
12-10-79	061466	American selling price: Women's causal open-toe, open-back ankle strap shoe with plastic/rubber sole and canvas upper (700.60)
1-18-80	061475	Classification: Die cast metal vehicles in miniature size (737.15, 737.95)
12-12-79	061660	Classification: Kilims (360.78, 365.86)
12-28-79	061700	Classification: Glass timer (546.52, 735.20)
1-14-80	061732	Classification: Raincoat with epaulets (382.00, 382.12)
12-31-79	061813	Classification: Metal discs (646.70, 745.40)
1-11-80	062190	Classification: Tote bags (389.62)
12-12-79	062303	Classification: Vinyl gloves (705.86, 734.99)
1- 7-80	062348	American selling price: Sport sandals (700.60)
12-17-79	062487	Classification: Gloves (704.40, 705.86)
12-13-79	062525	Classification: Self-propelled agricultural sprayer (692.16)
1- 7-80	062533	Classification: Plastic tips to be used as pen points in roller pen refill (760.32, 760.40)
1-16-80	062594	Classification: Sixteen-quart field hamper (666.00)
12-28-79	062597	Classification: Wooden soldier decorations (737.22)
12- 6-79	062632	Classification: Roller skate boot (700.60, 734.90)
12-19-79	062643	Classification: Backgammon game integrated into carrying case (734.15)
1-11-80	062645	Classification: Waste heat regenerator (661.68)
12-17-79	062668	Classification: Taps for threading nuts (649.43)
1-25-80	062669	Classification: Livestock waterer (666.00)
1-16-80	062699	Classification: Eyeglass hinges; frame core wire (647.05, 708.47)
1-25-80	062705	Classification: Key holders (740.30, 740.38)
12-13-79	062707	Classification: Printed circuit board assembler (678.50)
1-29-80	062740	Classification: Curling brush (684.50, 750.47)
12-20-79	062745	Classification: Gloves (734.99)
1-28-80	062749	Classification: Wooden clown figures (737.22)
1-23-80	062783	Classification: Storage containers (772.15)
1-23-80	062797	Classification: Rattan picnic basket (706.17)
1-11-80	062801	Classification: Ceramic tile cutting device (657.25)
1-11-80	062805	Classification: Window guards (647.03)
1-29-80	062851	Classification: Pipe tools (648.07, 649.49)

Date of decision	File No.	Issue
1-14-80	062854	Classification: Flotation jacket (772.30, 774.60)
12-28-79	062856	Classification: Carbonating device (662.20, 678.50, 772.15)
1-17-80	062861	Classification: Machinery models (737.05, 737.15)
12-28-79	062894	Classification: Shopping bag (389.62)
12-13-79	062897	Classification: Machine screw (646.58)
1-25-80	062924	Classification: Vacuum bottles (790.59, 790.60, 790.61, 790.62)
1- 4-80	062958	Classification: Dried hemoglobin (190.20, 437.76, 439.30)
1-11-80	063429	Classification: Security briefcase (706.60)
1-16-80	064006	Classification: Religious booklets (270.25)
12- 6-79	064010	Classification: Fabric laminated on both sides with rubber (359.50)
12-18-79	064011	Classification: Wool fabric (336.60)
12-31-79	064036	Classification: Whether trademark symbol is ornamental
1-18-80	064040	Classification: Polypropylene bags (385.53)
1-11-80	064057	Classification: Candy (157.10)
12-13-79	064064	Classification: Bulk netting (352.40, 352.80)
12-11-79	064079	Classification: Shirt with overlaid yoke (380.00)
1-28-80	064159	Classification: Vegetable bag (385.53, 389.62)

International Trade Commission Notices

Investigations by the U.S. International Trade Commission

DEPARTMENT OF THE TREASURY

The appended notices relating to investigations by the U.S. International Trade Commission are published for the information of Customs Officers and others concerned.

R. E. CHASEN,
Commissioner of Customs.

In the Matter of CERTAIN PLASTIC-MOLDING APPARATUS AND COMPONENTS THEREOF	Investigation No. 337–TA–66

Notice of Termination

Upon consideration of the presiding officer's recommended determination and the record in this proceeding, the Commission hereby orders the termination of investigation No. 337–TA–66, "Certain Plastic-Molding Apparatus and Components Thereof," by granting a motion by all parties to terminate this investigation (motion docket No. 66–23) and accepting a settlement agreement proposed by all parties.

Any party wishing to petition for reconsideration of the Commission's action must do so within 14 days of service of the Commission order and Commissioner's memorandum opinion. Such petitions must be in accord with section 210.56 of the Commission's rules (19 CFR 210.56). Any person adversely affected by a final Commission action may appeal such action to the U.S. Court of Customs and Patent Appeals.

Copies of the Commission's action, order, and Commissioner's memorandum opinion (USITC publication No. 1032, January 1979) are available to the public during official working hours at the Office

of the Secretary, U.S. International Trade Commission, 701 E Street NW., Washington, D.C. 20436; telephone 202–523–0161. Notice of the institution of the Commission's investigation was published in the Federal Register of May 4, 1979 (44 F.R. 27504).

By order of the Commission.

Issued: February 5, 1980.

KENNETH R. MASON,
Secretary.

[332–91]

U.S. EXPORTS TO THE SOVIET UNION: PAST TRENDS, RECENT DEVELOPMENTS, AND FUTURE PROSPECTS

Notice of Termination of Investigation

Notice is hereby given that the U.S. International Trade Commission, on January 30, 1980, terminated investigation 332–91 relating to U.S. exports to the Soviet Union: Past trends, recent developments, and future prospects, an investigation which the Commission instituted on its own motion on December 30, 1977, under section 332 of the Tariff Act of 1930 (43 F.R. 2244). (January 16, 1978).

By order of the Commission.

Issued: February 4, 1980.

KENNETH R. MASON,
Secretary.

[19 CFR, Part 207]

Investigation No. AA1921–147A

ELECTRIC GOLF CARS FROM POLAND

Notice of Investigation and Hearing

AGENCY: U.S. International Trade Commission.

ACTION: Initiation of an investigation under section 751 of the Tariff Act of 1930.

SUMMARY: This action initiates an investigation under section 751 of the Tariff Act of 1930 to determine whether changed circumstances exist which indicate that an industry in the United States would not be threatened with material injury if the antidumping finding concerning electric golf cars from Poland were revoked (40 F.R. 53383).

On September 16, 1975, the Commission determined that an industry in the United States is being injured by reason of the importation of electric golf cars that are being, or are likely to be, sold at less than fair value within the meaning of the Antidumping Act, 1921. An application for review of this determination was filed with the Commission by Melex, USA, Inc., an importer of the subject product, on August 6, 1979, in accordance with the then extant Rules of Practice and Procedure. The Commission published a notice in the Federal Register inviting public comment on the question of whether the Commission should conduct a review of the determination. Public comments were received from five interested persons. On the basis of the application and the public comments, the Commission, by action of January 30, 1980, voted to institute an investigation pursuant to section 751 of the Tariff Act of 1930 and section 207.45 of the Rules of Practice and Procedure.

PUBLIC HEARING ORDERED: A public hearing in connection with the investigation will be held on Wednesday, April 16, 1980, in the Commission's hearing room, U.S. International Trade Commission Building, 701 E Street NW., Washington, D.C. 20436, beginning at 10 a.m., e.s.t. Requests to appear at the public hearing should be filed in writing with the Secretary to the Commission not later than close of business (5:15 p.m., e.s.t.), Friday, April 11, 1980. For further information, consult the Commission's Rules of Practice and Procedure, part 207, subpart C (44 F.R. 76457), effective January 1, 1980.

PREHEARING STATEMENTS: The Commission will prepare and place on the record by March 27, 1980, a staff report containing preliminary findings of fact. Parties to the investigation will submit to the Commission a prehearing statement by April 11, 1980. The content of such statement should include the following:

(a) exceptions, if any, to the preliminary findings of fact contained in the staff report,
(b) any additional or proposed alternative findings of fact,
(c) proposed conclusions of law,
(d) any other information and arguments which a party believes relevant to the Commission's determination in this investigation; and
(e) a proposed determination for adoption by the Commission.

WRITTEN SUBMISSIONS: Any person may submit to the Commission on or before the prehearing statement any written statements of information pertinent to the subject matter of the investigation. A signed original and 19 true copies of such statements must be submitted.

Any business information which a submitter desires the Commission to treat as confidential shall be submitted separately and each sheet must be clearly marked at the top "Confidential business data." Confidental submissions must conform with the requirements of section 201.6 of the Rules of Practice and Procedure (19 CFR 201.6). All written submissions except business confidential data, will be available for public inspection.

FOR FURTHER INFORMATION CONTACT: Mr. Thomas St. Maxens, U.S. International Trade Commission; 202-523-0339.

By order of the Commission.

Issued: February 5, 1980.

KENNETH R. MASON,
Secretary.

[332-73]

Notice of Release for Public Comment of U.S. Administration Draft Comments on Draft Chapters of the Harmonized Commodity Description and Coding System

AGENCY: U.S. International Trade Commission.

ACTION: Release for public comment, pursuant to Commission investigation No. 332-73, under the authority of section 332 (g) of the Tariff Act of 1930, as amended, of drafts of, and draft U.S. comments on, the following chapters of the Harmonized Commodity Description and Coding System.

Chapter 39: Artificial resins and plastic materials, cellulose esters and ethers; articles thereof.

Chapter 40: Rubber, synthetic rubber, factice, and articles thereof.

WRITTEN SUBMISSIONS: Parties wishing to submit written comments should do so by February 29, 1980.

HEARING: Parties desiring the Commission to hold a hearing on these draft chapters of the Harmonized Code should contact the Secretary of the Commission by February 22, 1980, and show good cause for holding a hearing.

COPIES OF DOCUMENTS: Copies of the draft chapters and draft U.S. comments thereon which are the subject of this notice are available for public inspection at the offices of the Commission, 701 E Street NW., Washington, D.C. 20436, or at 6 World Trade Center, New York, N.Y. 10048. The Commission will also send copies to interested parties upon request.

FOR FURTHER INFORMATION CONTACT: Eugene A. Rosengarden, Director, Office of Nomenclature, Valuation and Related Activities, U.S. International Trade Commission, 701 E Street NW., Washington, D.C. 20436; telephone 202-523-0370.

SUPPLEMENTARY INFORMATION: The purpose of this notice is to obtain the comments and views of interested parties with respect to the above-mentioned draft chapters of the Harmonized Commodity Description and Coding System, and of the draft U.S. comments thereon.

This notice is being issued pursuant to Commission investigation No. 332-73, instituted on January 31, 1975 (40 F.R. 6329), under section 332 (g) of the Tariff Act of 1930. The investigation was initiated in accordance with section 608 (c) of the Trade Act of 1974, which provides, in part, that the Commission shall institute an investigation which would provide the basis for—

> (2) full and immediate participation by the United States International Trade Commission in the United States contribution to technical work of the Harmonized Systems [sic] Committee under the Customs Cooperation Council to assure the recognition of the needs of the U.S. business community in the development of a Harmonized Code reflecting sound principles of commodity identification and specification and modern producing methods and trading practices * * *.

The Harmonized Commodity Description and Coding System (Harmonized Code) is being developed by the Customs Cooperation Council (CCC), an 80-member international organization with headquarters in Brussels, as an international commodity classification system which will be adaptable for modernized customs tariff nomenclature purposes and for recording, handling, and reporting of transactions in international trade. The Harmonized Code will be based on, and in many respects will be an extension of, the Customs Cooperation Council Nomenclature (CCCN), formerly known as the Brussels Tariff Nomenclature (BTN).

Currently, the technical team working under auspices of the CCC prepares drafts of the various chapters of the Harmonized Code for consideration by the Harmonized System Committee, which was established in order to develop the code. These drafts are forwarded to the members and observers of the committee for their review and submission of written comments. The committee meets three times a year to consider these drafts and the written comments and presentations of the various delegations. The review of a particular chapter or group of chapters may extend to more than one meeting.

In 1971, the Department of the Treasury established an Interagency Advisory Committee on Customs Cooperation Council Matters in

order to provide a basis for interested Federal agencies to participate with respect to CCC matters. In order to establish and develop U.S. programs and policies with respect to the Harmonized Code, the interagency committee has instituted procedures which take into account the provisions of section 608(c) of the Trade Act of 1974, which call for the Commission to contribute to the U.S. technical input to the Harmonized System Committee. Under these procedures the Commission is preparing technical comments and proposals on the various chapters of the Harmonized Code for consideration by the interagency committee in the determination of U.S. proposals with respect to the Harmonized Code. In making proposals, the Commission is seeking and taking into consideration the views of trade and industry and other interested parties and of interested Government agencies.

The draft U.S. comments on the chapters of the Harmonized Code released for public comment today relate specifically to the technical team drafts of these chapters and should be read in conjunction therewith.

In its public notices of May 4, 1976 (41 F.R. 18716 of May 6, 1976), August 9, 1976 (41 F.R. 34370 of August 13, 1976), December 20, 1976 (41 F.R. 55948 of December 23, 1976), September 1, 1977 (42 F.R. 44852 of September 7, 1977), February 7, 1978 (43 F.R. 5902 of February 10, 1978), October 16, 1978 (43 F.R. 48723 of October 19, 1978), February 14, 1979 (44 F.R. 10435 of February 20, 1979), May 16, 1979 (44 F.R. 29740 of May 22, 1979), and September 5, 1979 (44 F.R. 53112 of September 12, 1979), the Commission identified those chapters which have been considered thus far by the Harmonized System Committee, and the chapters for which a technical team draft has been released.

By order of the Commission.

Issued: February 1, 1980.

KENNETH R. MASON,
Secretary.

Index

U.S. Customs Service

T.D. No.

Treasury decisions: Austria added to list of countries, section 10.59, Customs Regulations amended 80-68

C.S.D. No.

Customs Service decisions:

Aircraft: Applicability to civil aircraft of fee schedule for specific services provided by Customs officers 80-5

Articles exported and returned under item 806.30, TSUS: Whether the cost of a die forms part of the dutiable value of processing performed abroad 80-14

Carrier control:

Use of foreign vessels to transport motor fuel antiknock compound 80-2

Application of U.S. laws to a site on the Outer Continental Shelf after removal of an exploratory rig 80-11

Classification:

Actual use provision; substitution 80-1

Mop truck 80-3

Traction devices for automobile tires 80-6

Photomask inspection system 80-7

Unfinished footwear 80-8

Inclusion of bottom bracket assembly in "Cotterless Type Crank Set" 80-9

Country-of-origin marking:

Garments Assembled in One Country From Parts Produced in Another Country 80-10

Merchandise imported from the People's Republic of China 80-12

Dental surgical instruments exported and returned 80-15

Generalized System of Preferences: Chemical produced in one BDC from components imported from another BDC 80-4

Reliquidation: Erroneous exporation of merchandise from warehouse due to proprietor's failure to follow instructions 80-13

Appeals from the International Trade Commission, investigation No. 337-TA-43 *Hale Fire Pump Co.* v. *Tokai, Ltd., C. Itoh & Co., Ltd., C. Itoh America, Inc., and International Trade Commission* 79-21

Customs Court

American manufacturers' action, C.D. 4838

Antidumping; summary judgment, motion for, C.D. 4838

Antidumping Act:
Negative injury determination, C.D. 4838
Procedures applicable under, C.D. 4838
Quantum of injury required, C.D. 4838
Construction:
Antidumping Act of 1921, as amended, C.D. 4838
Sec. 201, C.D. 4838
Sec. 202(a), C.D. 4838
Public Law No. 93–618, C.D. 4838
Public Law No. 96–39, C.D. 4838
Tariff Act of 1930:
Sec. 516, as amended, C.D. 4838
Sec. 516A, C.D. 4838
Trade Act of 1974, C.D. 4838
Trade Agreements Act of 1979, C.D. 4838
U.S. Code:
Title 19:
Sec. 160 *et seq.*, C.D. 4838
Sec. 160(a), C.D. 4838
Sec. 160(d)(1), C.D. 4838
Sec. 160(d)(2), C.D. 4838
Sec. 161(a), C.D. 4838
Sec. 1516, C.D. 4838
Sec. 1516(a), C.D. 4838
Sec. 1516(c), C.D. 4838
Sec. 1516(f), C.D. 4838
Sec. 2231(a), C.D. 4838
Title 28:
Sec. 1582(b)
Sec. 2632(a)
Cross-motions for summary judgment, C.D. 4838
Definition:
Injury, C.D. 4838
Substantial evidence, C.D. 4838
Hand tools, non-powered, C.D. 4838
Injury determination; scope of review, C.D. 4838
Judicial review:
Negative injury determination by United States Tariff Commission, C.D. 4838
Tariff Commission actions and proceedings, C.D. 4838
Legislative history:
Hearing Before the Subcommittee on Trade, House Committee on Ways and Means, on the Adequacy and the Administration of the Antidumping Act of 1921 (95th Cong., 1st Sess. 1977), pp. 62, 65–66, C.D. 4838
Senate Reports:
No. 93–1298, 93d Cong., 2d Sess. 100 (1974), C.D. 4838
No. 96–249, 96th Cong., 1st Sess. 251 (1979), C.D. 4838
Less than fair value; negative injury determination, C.D. 4838
Motion for summary judgment, C.D. 4838
Negative injury determination:
Antidumping Act, C.D. 4838
By United States Tariff Commission; judicial review, C.D. 4838
Less than fair value, C.D. 4838

Non-powered hand tools, C.D. 4838
Quantum of injury required; Antidumping Act, C.D. 4838
Review of injury determination; substantial evidence standard, C.D. 4838
Scope of review; injury determination, C.D. 4838
Substantial evidence standard; review of injury determination, C.D. 4838
Summary judgment:
    Cross-motions for, C.D. 4838
    Motion for, C.D. 4838
    Motion for; antidumping, C.D. 4838
Tariff Commission actions and proceedings; judicial review, C.D. 4838
Treatises and Related Publications:
    Hendrick, *The United States Antidumping Act*, 58 American Journal of International Law 914, 924 (1964), C.D. 4838
    Metzger & Musrey, *Judicial Review of Tariff Commission Actions and Proceedings*, 56 Cornell L. Rev. 285, 320–30 (1971), C.D. 4388
Valuation decision:
    Construction:
        Customs Simplification Act of 1956, C.D. 4839
        Tariff Act of 1930:
            Sec. 402(b), as amended, C.D. 4839
            Sec. 402(f), as amended, C.D. 4839
            Sec. 402(f)(1), as amended, C.D. 4839
            Sec. 402(f)(1)(B), as amended, C.D. 4839
        U.S. Code:
            Title 19, sec. 1401a(b), C.D. 4839
            Title 28:
                Sec. 2633, C.D. 4839
                Sec. 2635(a), C.D. 4839
                Sec. 2635(b), C.D. 4839
    Issues:
        Burden of proof—failure of proof—Where the plaintiff importer rebutted the presumption of correctness attaching to the appraised values, but failed to establish the correctness of the claimed values, the appeals for reappraisement were dismissed with the appraised values remaining in effect. C.D. 4839
        Burden of proof—It is well established that plaintiff, in challenging the appraised values, must (1) overcome the presumption of correctness attaching to the appraised values and (2) establish the correct value by proper evidence. C.D. 4839
        Export value—freely offered for sale—Where plaintiff was not a selected purchaser, determination of the price of merchandise by arm's length negotiation between exporter and purchaser did not establish that the merchandise was freely offered for sale to all purchasers at wholesale for exportation to the United States at such prices. C.D. 4839
        Export value—selected purchaser—Plaintiff could not be considered a selected purchaser where there was no showing that sales of merchandise were restricted to plaintiff and no offers were made for sale to all purchasers at wholesale. C.D. 4839
        Export value—such or similar merchandise—Where wigs and other products of human hair were made to importer's specifications and differed from all other wigs and products of human hair in mix of hair types, length and weight of hair, quality of materials, whether

machine made, handmade or hand finished, they were held not to be such as or similar to other such merchandise of the manufacturer. C.D. 4839
Merchandise; wigs and other products of human hair, C.D. 4839
Value; export, C.D. 4839
Words and phrases; such or similar merchandise, C.D. 4839
Words and phrases:
Injury, C.D. 4838
Substantial evidence, C.D. 4838

U.S. GOVERNMENT PRINTING OFFICE : 1980 O - 308-895

MAR 1 0 1980
315-579 950-D T1.11/3: 14/10
$1.30

Customs Bulletin

Regulations, Rulings, Decisions, and Notices concerning Customs and related matters

and Decisions

of the United States Court of Customs and Patent Appeals and the United States Customs Court

Centri
9247

Vol. 14 MARCH 5, 1980 No. 10

This issue contains

T.D. 80-69 through 80-75
General Notice
C.S.D. 80-16 through 80-30
C.D. 4840 through 4842
Protest abstracts 80P/24
Reap. abstracts 80R/6 through 80R/8
International Trade Commission Notice

THE DEPARTMENT OF THE TREASURY
U.S. Customs Service

NOTICE

The abstracts, rulings, and notices which are issued weekly by the U.S. Customs Service are subject to correction for typographical or other printing errors. Users may notify the U.S. Customs Service, Logistics Management Division, Washington, D.C. 20229, of any such errors in order that corrections may be made before the bound volumes are published.

For sale by the Superintendent of Documents, U.S. Government Printing Office, Washington, D.C. 20402. Price: $1.30 (single copy domestic); $1.65 (single copy foreign). Subscription price: $65.00 a year domestic; $81.25 a year foreign.

U.S. Customs Service

Treasury Decisions

T.D. 80–69

Foreign Currencies—Daily Rates For Countries Not On Quarterly List

Rates of exchange based on rates certified to the Secretary of the Treasury by the Federal Reserve Bank of New York for the Brazil cruzeiro, People's Republic of China yuan, Hong Kong dollar, Iran rial, Philippines peso, Singapore dollar, Thailand baht (tical) and Venezuela bolivar

The Federal Reserve Bank of New York, pursuant to section 522(c), Tariff Act of 1930, as amended (31 U.S.C. 372(c)), has certified buying rates for the dates and foreign currencies shown below. The rates of exchange, based on these buying rates, are published for the information and use of Customs officers and others concerned pursuant to part 159, subpart C, Customs regulations (19 CFR 159, subpart C).

Brazil cruzeiro:	
February 4–8, 1980	$. 0228
People's Republic of China yuan:	
February 4–8, 1980	$0. 666711
Hong Kong dollar:	
February 4, 1980	$0. 206954
February 5, 1980	. 205888
February 6, 1980	. 205550
February 7, 1980	. 204918
February 8, 1980	. 205550
Iran rial:	
February 4–8, 1980	Not available
Phillipines peso:	
February 4–7, 1980	$0. 1355
February 8, 1980	. 1350
Singapore dollar:	
February 4, 1980	$0. 463499
February 5, 1980	. 464145
February 6, 1980	. 464468
February 7–8, 1980	. 464360

Thailand baht (tical):
February 4–8, 1980 ..... $0.048875
Venezuela bolivar:
February 4–8, 1980 ..... $0.2329

(LIQ-3-TRODE)

Dated: February 13, 1980.

G. SCOTT SHREVE,
Acting Director,
Duty Assessment Division.

(T.D. 80-70)

Notice of Recordation of Trade Name

COLT COMMUNICATIONS

On January 10, 1979, there was published in the Federal Register (44 F.R. 2217) a notice of application for the recordation under section 42 of the act of July 5, 1946, as amended (15 U.S.C. 1124), of the trade name Colt Communications, Inc. The notice advised that prior to final action on the application, filed pursuant to section 133.12, Customs regulations (19 CFR 133.12), consideration would be given to relevant data, views, or arguments submitted in opposition to the recordation and received not later than 30 days from the date of publication of the notice.

The name "Colt Communications" is hereby recorded as the trade name of Colt Communications, a corporation organized under the laws of the State of Illinois, located at 5424 West Touhy Avenue, Skokie, Ill. 60077, when applied to citizen band two-way radio transceivers manufactured in Japan and Korea. No foreign firm is authorized to use the trade name sought to be recorded.

Dated: February 13, 1980.

HARVEY B. FOX,
Acting Director, Office of
Regulations and Rulings.

(T.D. 80–71)

Bonds

Approval and discontinuance of consolidated aircraft bonds (air carrier blanket bonds) Customs Form 7605

The following consolidated aircraft bonds have been approved or discontinued as shown below. The symbol "D" indicates that the bond previously outstanding has been discontinued on the month, day, and year represented by the figures which follow. "PB" refers to a previous bond, dated as represented by figures in parentheses immediately following, which has been discontinued. If the previous bond was in the name of a different company or if the surety was different, the information is shown in a footnote at the end of the list.

Dated: February 12, 1980.

Name of principal and surety	Date term commences	Date of approval	Filed with area director of Customs: amount
British Caledonian Airways, Ltd., London Airport—Gatwick, Horley, Surrey, England; American Home Assurance Co. D 4/1/80	Mar. 15, 1976	Apr. 1, 1976	Miami, FL; $100,000
Icelandic Airlines, Inc., J.F.K. Airport, Jamaica, NY; Federal Ins. Co. (PB 12/30/71) D 1/15/80 [1]	Dec. 28, 1979	Dec. 29, 1979	J.F.K. Airport; $100,000

[1] Surety is St. Paul Fire & Marine Insurance Co.

The foregoing principal has been designated as a carrier of bonded merchandise.

BON–3–01

HARVEY B. FOX
(For Donald W. Lewis, *Director*,
Office of Regulations and Rulings).

(T.D. 80–72)

Manmade Fiber Textile Products—Restriction on Entry

Restriction on entry of manmade fiber textile products manufactured or produced in Haiti

There is published below a directive of January 28, 1980, received by the Commissioner of Customs from the chairman, Committee for the Implementation of Textile Agreements, concerning restriction on

entry of manmade fiber textile products in categories 632 and 649 manufactured or produced in Haiti. This directive amends, but does not cancel, that committee's directive of November 7, 1979 (T.D. 80–31).

This directive was published in the Federal Register on January 31, 1980 (45 F.R. 6984), by the committee.

(QUO–2–1)

Dated: February 14, 1980.

WILLIAM D. SLYNE
(For G. Scott Shreve, Acting
Director, Duty Assessment Division).

U.S. DEPARTMENT OF COMMERCE,
THE ASSISTANT SECRETARY FOR INDUSTRY AND TRADE,
Washington, D.C. January 28, 1980.

Committee for the Implementation of Textile Agreements

COMMISSIONER OF CUSTOMS,
Department of the Treasury,
Washington, D.C.

DEAR MR. COMMISSIONER: This directive further amends, but does not cancel, the directive issued to you on November 7, 1979, by the chairman, Committee for the Implementation of Textile Agreements, concerning imports into the United States of certain cotton and man-made fiber textile products, produced or manufactured in Haiti.

Under the terms of the Arrangement Regarding International Trade in Textiles done at Geneva on December 20, 1973, as extended on December 15, 1977; pursuant to the Bilateral Cotton, Wool and Man-Made Fiber Textile Agreement of August 17, 1979, between the Governments of the United States and Haiti; and in accordance with the provisions of Executive Order 11651 of March 3, 1972, as amended by Executive Order 11951 of January 6, 1977, you are directed to prohibit, effective on January 28, 1980, and for the 12-month period which began on May 1, 1979, and extends through April 30, 1980, entry into the United States for consumption and withdrawal from warehouse for consumption of manmade fiber textile products in categories 632 and 649, produced or manufactured in Haiti, in excess of the following amended 12-month levels of restraint:

Category	*Amended 12 month level of restraint* [1]
632	1,557,924 dozen pairs
649	1,062,198 dozen

[1] The levels of restraint have not been adjusted to reflect any imports after Apr. 30, 1979.

The actions taken with respect to the Government of Haiti and with respect to imports of manmade fiber textile products from Haiti have been determined by the Committee for the Implementation of Textile Agreements to involve foreign affairs functions of the United States. Therefore, the directions to the Commissioner of Customs, which are necessary for the implementation of such actions, fall within the foreign affairs exception to the rulemaking provisions of 5 U.S.C. 553. This letter will be published in the Federal Register.

Sincerely,

PAUL T. O'DAY,
Chairman, Committee for the Implementation of Textile Agreements.

(T.D. 80-73)

Cotton, Wool, and Manmade Fiber Textile Products—Restriction on Entry

Restriction on entry of cotton, wool, and manmade fiber textile products manufactured or produced in Macau

There is published below a directive of January 25, 1980, received by the Commissioner of Customs from the chairman, Committee for the Implementation of Textile Agreements, concerning restriction on entry of cotton, wool, and manmade fiber textile products in various categories manufactured or produced in Macau.

This directive was published in the Federal Register on January 30, 1980 (45 F.R. 6826), by the Committee.

(QUO-2-1)

Dated: February 14, 1980.

WILLIAM D. SLYNE
(For G. Scott Shreve, Acting Director, Duty Assessment Division).

U.S. DEPARTMENT OF COMMERCE,
INTERNATIONAL TRADE ADMINISTRATION,
Washington, D.C., January 25, 1980.

Committee for the Implementation of Textile Agreements

COMMISSIONER OF CUSTOMS,
Department of the Treasury,
Washington, D.C.

DEAR MR. COMMISSIONER: Under the terms of the Arrangement Regarding International Trade in Textiles done at Geneva on December 20, 1973, as extended on December 15, 1977; pursuant to the Bilateral Cotton, Wool and Man-Made Fiber Textile Agreement of November 29 and December 18, 1979, between the Governments of the United States and Portugal; and in accordance with the provisions of Executive Order 11651 of March 3, 1972, as amended by Executive Order 11951 of January 6, 1977, you are directed to prohibit, effective on February 1, 1980, and for the 12-month period beginning on January 1, 1980, and extending through December 31, 1980, entry into the United States for consumption and withdrawal from warehouse for consumption of cotton, wool, and manmade fiber textile products in the following categories, produced or manufactured in Macau, in excess of the indicated levels of restraint:

Category	*12-month level of restraint*
333/334/335	80, 654 dozen of which not more than 45,000 dozen shall be in category 333/335
338	114, 755 dozen
339	488, 254 dozen
340	110, 000 dozen
341	70, 948 dozen
347/348	262, 000 dozen
445/446	67, 914 dozen
633/634/635	183, 458 dozen
641	65, 498 dozen
647/648	200, 152 dozen
659	203, 724 dozen

In carrying out this directive, entries of textile products in the foregoing categories, except categories 339 and 659, which have been exported to the United States prior to January 1, 1980, shall, to the extent of any unfilled balances, be charged against the levels of restraint established for such goods during the 12-month period beginning on January 1, 1979, and extending through December 31,

1979. In the event that the levels of restraint established for that period have been exhausted by previous entries, such goods shall be subject to the levels set forth in this letter. Textile products in categories 339 and 659 which have been exported prior to January 1, 1980, shall not be subject to this directive.

Textile products in categories 339 and 659 which have been released from the custody of the U.S. Customs Service under the provisions of 19 U.S.C. 1448(b) or 1484(a)(1)(A) prior to the effective date of this directive shall not be denied entry under this directive.

The levels of restraint set forth above are subject to adjustment in the future pursuant to the provisions of the bilateral agreement of November 29 and December 18, 1979, which provide, in part, that: (1) Within the aggregate and applicable group limits, specific levels of restraint may be exceeded by designated percentages; (2) these same levels may be increased for carryover and carryforward up to 11 percent of the applicable category limit; (3) administrative arrangements or adjustments may be made to resolve minor problems arising in the implementation of the agreement. Any appropriate adjustments under the provisions of the bilateral agreement referred to above will be made to you by letter.

A detailed description of the textile categories in terms of TSUSA numbers was published in the Federal Register on January 4, 1978 (43 F.R. 884), as amended on January 25, 1978 (43 F.R. 3421), March 3, 1978 (43 F.R. 8828), June 22, 1978 (43 F.R. 26773), September 5, 1978 (43 F.R. 39408), January 2, 1979 (44 F.R. 94), March 22, 1979 (44 F.R. 17545), April 12, 1979 (44 F.R. 21843), and December 20, 1979 (44 F.R. 75441).

In carrying out the above directions, entry into the United States for consumption shall be construed to include entry for consumption into the Commonwealth of Puerto Rico.

The actions taken with respect to the Government of Portugal and with respect to imports of cotton, wool, and manmade fiber textile products from Macau have been determined by the Committee for the Implementation of Textile Agreements to involve foreign affairs functions of the United States. Therefore, the directions to the Commissioner of Customs, which are necessary for the implementation of such actions, fall within the foreign affairs exception to the rulemaking provisions of 5 U.S.C. 553. This letter will be published in the Federal Register.

Sincerely,

PAUL T. O'DAY,
Chairman, Committee for the Implementation of Textile Agreements.

(T.D. 80–74)

Cotton, Wool, and Manmade Fiber Apparel Products—Restriction on Entry

Restriction on entry of cotton, wool, and manmade fiber apparel products manufactured or produced in Indonesia

There is published below a directive of February 1, 1980, received by the Commissioner of Customs from the chairman, Committee for the Implementation of Textile Agreements, concerning visa requirements on cotton, wool, and manmade fiber apparel products in certain categories manufactured or produced in Indonesia

This directive was published in the Federal Register on February 6, 1980 (45 F.R. 8084), by the committee.

(QUO–2–1)

Dated: February 14, 1980.

WILLIAM D. SLYNE
(For G. Scott Shreve, Acting
Director, Duty Assessment Division).

U.S. DEPARTMENT OF COMMERCE,
THE ASSISTANT SECRETARY FOR INDUSTRY AND TRADE,
Washington, D.C., February 1, 1980.

Committee for the Implementation of Textile Agreements

COMMISSIONER OF CUSTOMS,
Department of the Treasury,
Washington, D.C.

DEAR MR. COMMISSIONER: In accordance with the provisions of Executive Order 11651 of March 3, 1972, as amended by Executive Order 11951 of January 6, 1977, you are directed to prohibit, effective on March 15, 1980, and until further notice, entry into the United States for consumption and withdrawal from warehouse for consumption of cotton, wool, and manmade fiber apparel products in categories 330–359, 431–459, and 630–659, produced or manufactured in the Republic of Indonesia and exported on and after March 1, 1980, for which the Government of the Republic of Indonesia has not issued an appropriate export visa, fully described below. Merchandise exported before the effective date of this directive shall not be denied

entry for consumption, or withdrawal from warehouse for consumption in the United States until June 15, 1980.

The export visa will be a rectangular stamp in blue ink on the front of the invoice (Special Customs Invoice Form 5515, successor document, or commercial invoice when that form is used) and will be signed by an official of the Government of the Republic of Indonesia. A facsimile of the visa stamp is enclosed.

You are directed to permit entry into the United States for consumption and withdrawal from warehouse for consumption of designated shipments of cotton, wool, and/or manmade fiber textile products, produced or manufactured in the Republic of Indonesia, notwithstanding the designated shipment or shipments do not fulfill the aforementioned visa requirements, whenever requested to do so in writing by the Committee for the Implementation of Textile Agreements.

A detailed description of the textile caregories in terms of TSUSA numbers was published in the Federal Register on January 4, 1978 (43 F.R. 884), as amended on January 25, 1978 (43 F.R. 3421), March 3, 1978 (43 F.R. 8828), June 22, 1978 (43 F.R. 26773), September 5, 1978 (43 F.R. 39408), January 2, 1979 (44 F.R. 94), March 22, 1979 (44 F.R. 17545), and April 12, 1979 (44 F.R. 21843), and December 20, 1979 (44 F.R. 75441).

In carrying out the above directions, entry into the United States for consumption shall be construed to include entry for consumption into the Commonwealth of Puerto Rico.

The actions taken with respect to the Government of the Republic of Indonesia and with respect to imports of cotton, wool, and manmade fiber textile products from the Republic of Indonesia have been determined by the Committee for the Implementation of Textile Agreements to involve foreign affairs functions of the United States. Therefore, the directions to the Commissioner of Customs, which are necessary for the implementation of such actions, fall within the foreign affairs exception to the rulemaking provisions of 5 U.S.C. 553. This letter will be published in the Federal Register.

Sincerely,

PAUL T. O'DAY,
Chairman, Committee for the Implementation of Textile Agreements.

Enclosure.

Visa for Cotton, Wool, and Manmade Fiber Apparel Exported to the United States from the Republic of Indonesia

Republic of Indonesia
Textile Export Visa
No.: _____
Date: _____
_____
Signature

(T.D. 80-75)

Customs Delegation Order No. 60

Order of Commissioner of Customs establishing an order of succession of persons to act as Commissioner of Customs

DEPARTMENT OF THE TREASURY,
OFFICE OF THE COMMISSIONER OF CUSTOMS,
Washington, D.C., February 7, 1980.

By virtue of the authority vested in me by Treasury Department Order No. 129, Revision No. 2, dated April 22, 1955 (20 F.R. 2875), it is hereby ordered that the following officers of the U.S. Customs Service, in the order of succession enumerated, shall act as Commissioner of Customs, in the event of an enemy attack or during the absence or disability of the Commissioner of Customs, or when there is a vacancy in such office:

1. The Deputy Commissioner of Customs.
2. The Assistant Commissioner (Border Operations).
3. Comptroller.
4. The Assistant Commissioner (Commercial Operations).
5. Assistant Commissioner (Management Integrity).

By virtue of authority vested in me by said Treasury Department Order No. 129 (revision No. 2), and Treasury Department Order No. 165, Revised (T.D. 53654; 19 F.R. 7241), there is hereby delegated to the Regional Commissioners of Customs, district directors of Customs, and port directors of Customs, in the event of an enemy attack on the continental United States, authority to perform any function of the Commissioner of Customs which is necessary to insure continuous performance of essential functions otherwise assigned to such officers.

This delegation of authority will remain in effect until notice has been received from proper authority that it has been terminated.

This order supersedes Customs Delegation Order No. 52, dated October 10, 1975 (T.D. 75-260; 40 F.R. 48701).

R. E. CHASEN,
Commissioner of Customs.

U.S. Customs Service

General Notice

Improving Government Regulations—Semiannual Agenda

AGENCY: U.S. Customs Service, Department of the Treasury.

ACTION: Semiannual agenda.

SUMMARY: In response to Executive Order 12044, "Improving Government Regulations," and the Treasury Department directive implementing that Executive order, Customs has prepared and is publishing for public information a list of significant regulations either under development or under review.

FOR FURTHER INFORMATION CONTACT: For additional information regarding any particular regulatory project described in agenda, communicate with the person identified as the "Contact." Comments or inquiries of a general nature should be directed to: Todd J. Schneider, Regulations and Research Division, Office of Regulations and Rulings, U.S. Customs Service, room 2335, 1301 Constitution Avenue NW., Washington, D.C. 20229; 202-566-8237.

SUPPLEMENTARY INFORMATION:

BACKGROUND

On November 8, 1978, the Department of the Treasury published a report in the Federal Register (43 F.R. 52120) to implement Executive Order 12044. The report included a directive that each Treasury bureau or office shall publish a semiannual agenda of significant regulations either under development or under review. The agenda is to describe each regulatory project (project) being considered, the need for and legal basis for the action being taken, the name and telephone number of a knowledgeable agency official, and whether a regulatory analysis will be prepared. In addition, subsequent agendas will show the status of projects referred to in the previously published agenda. A notice published in the preliminary pages of the Federal Register on October 10, 1978 (43 F.R. xii), provides that Customs will publish its semiannual agenda on February 1 and August 1 of each year.

The following is the third semiannual agenda to be published by Customs. It has been determined that none of the projects listed will require a regulatory analysis under the criteria set out in the Executive order and implementing Treasury directive.

General statutory authority for the development or review of regulations relating to Customs matters is found in section 301, title 5, United States Code (5 U.S.C. 301), and in sections 66 and 1624, title 19, United States Code (19 U.S.C. 66, 1624). When appropriate, specific statutory authority is indicated after the description of each project.

In accordance with the Treasury directive implementing Executive Order 12044, no action, other than preliminary studies, may be taken on any project commenced after May 22, 1978, without secretarial approval of a "work plan". Work on many of the described projects commenced before May 22, 1978, and, therefore, no work plan will be prepared. For these projects, and others which are in an early stage of preparation, no work plans are available to the public. However, projects which either have had work plans approved or are the subject of documents published in the Federal Register (F.R.) as an advance notice of proposed rulemaking (ANPRM), a notice of proposed rulemaking (NPRM), or a final rule—Treasury decision (T.D.), are identified by work plan number or Federal Register citation. Approved work plans are available to the public under the provisions of the Freedom of Information Act, as amended (5 U.S.C. 552), and part 103, Customs Regulations (19 CFR part 103). Requests should be addressed to the Freedom of Information and Privacy Branch, U.S. Customs Service, 1301 Constitution Avenue NW., Washington, D.C. 20229.

By direction of the Secretary of the Treasury.

Dated: February 13, 1980.

R. E. CHASEN,
Commissioner of Customs.

CUSTOMS SERVICE—SEMIANNUAL AGENDA

Part I—Regulations Under Development

Title/citation (19 CFR —)	*Summary*
Vessels; drawback/parts 4 and 22.	*Description:* Conform regulations relating to Panama Canal Zone to provisions of Panama Canal Treaty. *Need:* Amendments required by Treaty of Sept. 7, 1977, "Panama Canal Treaty." *Authority:* 19 U.S.C. 1466. *Contact:* Donald H. Reusch, 202-566-5706. *Status:* T.D. 79-276, published Oct. 29, 1979 (44 F.R. 61954).

Customs Service—Semiannual Agenda

Part I—Regulations Under Development

Title/citation (19 CFR —)	*Summary*
Public gaugers—petroleum/parts 4 and 151.	*Description:* Insure maintenance of reliable statistics by implementing standardized guidelines and procedures for monitoring imports of petroleum and petroleum products. *Need:* Implement recommendations of Customs Petroleum Task Force. *Authority:* 19 U.S.C. 1202. *Contact:* Alice Rigdon, 202-566-5354. *Status:* Work plan 79-27 approved; NPRM published Dec. 21, 1979 (44 F.R. 75684); Treasury decision under development.
Vessels; foreign repairs/parts 4.7 and 4.14.	*Description:* Revision of requirements and procedures for handling entries relating to foreign repairs and equipment purchases by U.S. vessels. *Need:* To expedite processing of entries. *Authority:* 19 U.S.C. 1466, 1498, 1514. *Contact:* James Fritz, 202-566-5706. *Status:* NPRM published Apr. 4, 1978 (43 F.R. 14060); Treasury decision under development.
Vessels; navigation fees/part 4.98.	*Description:* Amend fee schedule under which Customs charges and collects fees for specific services provided to vessels. *Need:* To implement provisions of Public Law 95-410, "Customs Procedura' Reform and Simplification Act of 1978." *Authority:* 31 U.S.C. 483a. *Contact:* Jerry Laderberg, 202-566-5706. *Status:* NPRM published May 25, 1979 (44 F.R. 30375); T.D. 80-25, published Jan. 18, 1980 (45 F.R. 3570).
Vessels; forms substitution/part 4.99.	*Description:* Authorize printing of Customs forms used in connection with the entry and clearance of vessels by private parties and foreign governments on metric A-4 size paper. *Need:* To further U.S. policy regarding metric system and to facilitate international commerce. *Authority:* General. *Contact:* John Mathis, 202-566-5706. *Status:* Work plan 79-9 approved; T.D. 79-255 published Oct. 4, 1979 (44 F.R. 57087).

Customs Service—Semiannual Agenda

Part I—Regulations Under Development

Title/citation (19 CFR —)	*Summary*
Air commerce/parts 6, 10, and others.	*Description:* Establish new rules for (1) duty-free trade in civil aircraft and parts for civil aircraft, and (2) dutiability of foreign repairs to, and foreign purchases of parts and materials for, U.S.-registered civil aircraft. *Need:* To implement title VI, Civil Aircraft Agreement, of Public Law 96–39, "Trade Agreements Act of 1979." *Authority:* General. *Contact:* John Mathis, 202–566–5706. *Status:* Work plan 79–30 approved; NPRM published Jan. 8, 1980 (45 F.R. 1633).
Air commerce/parts 6.3 and 6.8	*Description:* Simplification and clarification of aircraft clearance procedures. *Need:* To facilitate clearance of aircraft departing U.S. *Authority:* 49 U.S.C. 1509. *Contact:* John Mathis, 202–566–5706. *Status:* Work plan 79–6 approved; Treasury decisions under development.
Petroleum/part 10	*Description:* Regulation of petroleum exports from Canada. *Need:* Conforming amendment required by Public Law 95–159. *Authority:* General. *Contact:* G. Scott Shreve, 202–566–5307. *Status:* Treasury decision under development.
Endangered species—antiques/parts 10 and 12.	*Description:* Provide for importation of specified antique articles otherwise prohibited entry by Endangered Species Act of 1973 at designated ports of entry. *Need:* Implement provisions of Public Law 95–632, "Endangered Species Act Amendments of 1978." *Authority:* 19 U.S.C. 1202. *Contact:* Harrison Feese, 202–566–8651. *Status:* Work plan 79–28 approved; NPRM under joint development by Customs and Fish and Wildlife Service.

313-579 O - 79 - 3

Customs Service—Semiannual Agenda

Part I—Regulations Under Development

Title/citation (19 CFR —)	*Summary*
Conforming amendments/parts 10, 12, and others.	*Description:* Conform regulations to provisions of various titles of Public Law 96–39, "Trade Agreements Act of 1979." *Need:* Miscellaneous amendments required by the Trade Agreements Act of 1979. *Authority:* General. *Contact:* Benjamin Mahoney, 202–566–765. *Status:* Work plan 79–31 approved; Treasury decision under development.
Carnets (E.C.S./A.T.A.)/parts 10 and 114.	*Description:* Substitute use of ATA carnet for ECS carnet in relation to the entry of commercial samples. *Need:* U.S. withdrawal from Customs Convention on ECS carnets (TIAS 6632) and accession to the Convention on ATA carnets (TIAS 6631). *Authority:* General. *Contact:* Jerrald Worley, 202–566–8607. *Status:* Treasury decision under development.
Entry of noise-emitting merchandise; standards and labeling/part 12.	*Description:* Regulations to administer the EPA noise emission standard and labeling requirements on certain imported merchandise. *Need:* To implement provisions of Public Law 92–572, "Noise Control Act of 1972." *Authority:* General. *Contact:* Harrison Feese, 202–566–8651. *Status:* NPRM under joint development by Customs and EPA.
Importation of motor vehicles/part 12.73	*Description:* Conform regulations governing importation of motor vehicles under Clean Air Act to proposed EPA amendments on Federal emission standards. *Need:* To implement provisions of "Clean Air Act of 1955" as amended by Public Law 95–95. *Authority:* 19 U.S.C. 1484. *Contact:* Harrison Feese, 202–566–8651. *Status:* NPRM under joint development by Customs and EPA.

Customs Service—Semiannual Agenda

Part I—Regulations Under Development

Title/citation (19 CFR —)	*Summary*
Entry of electronic products/parts 12.90 and 12.91.	*Description:* Implement FTC labeling requirements for certain imported electronic products. *Need:* Required by provisions of Public Law 93–523, "Public Health Service Act." *Authority:* General. *Contact:* Darrell Kast, 202–566–5765. *Status:* NPRMs published Sept. 5, 1975 (40 F.R. 41118) and July 27, 1976 (41 F.R. 31223); procedures under joint development by Customs and FTC.
Entry of energy-using products; labeling/part 12.92.	*Description:* Implement FTC labeling requirements for certain imported energy-using products. *Need:* Required by provisions of Public Law 94–163, "Energy Policy Conservation Act." *Authority.* General. *Contact:* Harrison Feese, 202–566–8651. *Status:* NPRM under joint development by Customs and FTC.
In-bond transportation of merchandise/parts 18, 123, and 144.	*Description:* Change time limits and other rules relating to in-bond transportation of merchandise. *Need:* To give Customs greater control over merchandise transported in bond. *Authority:* 19 U.S.C. 1552, 1553, 1557, 1623. *Contact:* J. Bradley Lund, 202–566–5354. *Status:* NPRM published Aug. 13, 1976 (41 F.R. 34271); Treasury decision under development.
Transportation in bond/part 18.8	*Description:* Increase amount of liquidated damages required by carrier's bond for shortage, failure to deliver or irregular delivery of duty-free merchandise. Carrier also would be liable for duty on dutiable merchandise, as well as liquidated damages. *Need:* To clarify carrier's obligations under required bond and provide for liquidated damages as deterrent to violations. *Authority:* 19 U.S.C. 1551, 1623. *Contact:* William Rosoff, 202–566–5856. *Status:* Work plan 79–11 approved; NPRM under development.

Customs Service—Semiannual Agenda

Part I—Regulations Under Development

Title/citation (19 CFR —)	*Summary*
Drawback; identification of entries/part 22.	*Description:* Require drawback entries be identified at time of entry. *Need:* To reduce delays in processing drawback claims. *Authority:* 19 U.S.C. 1313; 31 U.S.C. 483a. *Contact:* George Steuart, 202-566-8453. *Status:* ANPRM under development.
Drawback; bulk-fungible goods/part 22.5.	*Description:* Allow drawback without actual use of bulk-fungible goods if substituted for goods of same kind/quality. *Need:* To extend to other articles privileges now applicable to petroleum products. *Authority:* General. *Contact:* Donald Beach, 202-566-5856. *Status:* Action on NPRM suspended pending economic analysis and study as to whether legislation is required.
Entry of merchandise/parts 24. 141, 142, 144.	*Description:* To reduce the 10-working day period during which estimated duties must be deposited after merchandise is released under an entry or a permit for immediate delivery. *Need:* To improve the Government's cash flow by earlier collection of duties. *Authority:* 19 U.S.C. 1484, 1505, 1557. *Contact:* Benjamin Mahoney, 202-566-5765. *Status:* Possibility of accelerated duty payment remains under study.
Customs accounting procedure: Bonds/parts 24 and 113.	*Description:* Charge interest on delinquent accounts of importers and others with Customs. *Need:* To encourage importers to pay Customs bills promptly and thereby improve cash flow. *Authority:* 19 U.S.C. 1623. *Contact:* Robert B. Hamilton, 202-566-2598. *Status:* Work plan in review in Customs.

Customs Service—Semiannual Agenda

Part I—Regulations Under Development

Title/citation (19 CFR —)	*Summary*
Port of entry limits/part 101.3	*Description:* Extend port of entry limits of Brownsville, Tex. *Need:* To improve service to public. *Authority:* 19 U.S.C. 2; Executive Order 10289. *Contact:* Robert Schenarts, 202–566–8151. *Status:* NPRM published Feb. 9, 1979 (44 F.R. 8276); T.D. 79–254 published Oct. 4, 1979 (44 F.R. 57088).
New Customs district/part 101.3	*Description:* Establish Customs district at Dallas-Fort Worth, Tex. *Need:* To improve service to public. *Authority:* 19 U.S.C. 2; Executive Order 10289. *Contact:* Robert Schenarts, 202–566–8151. *Status:* NPRM published Aug. 15, 1978 (43 F.R. 36108); T.D. 79–232 published Aug. 20, 1979 (44 F.R. 48671).
Customhouse brokers/part 111	*Description:* Amend regulations relating to responsibilities of customhouse brokers. *Need:* To clarify responsibilities of customhouse brokers and to ensure uniform compliance with applicable regulations. *Authority:* 19 U.S.C. 1641. *Contact:* Edward B. Gable, Jr., 202–566–8047. *Status:* Action on work plan 79–5 suspended pending review of related legislative proposals.
Carriers of bonded merchandise/part 112.11.	*Description:* Revise criteria for designating private carriers of bonded merchandise to require only that they file bonds and transport their own property. *Need:* To lessen restrictions of prior regulation. *Authority:* 19 U.S.C. 1551. *Contact:* Donald Beach, 202–566–5856. *Status:* Work plan 79–10 approved; NPRM under development.

Customs Service—Semiannual Agenda

Part I—Regulations Under Development

Title/citation (19 CFR —)	*Summary*
Customs bonds/part 113	*Description:* Consolidation of Customs bonds and related forms. *Need:* To simplify bond structure and language preparatory to expansion of AMPS program. *Authority:* 19 U.S.C. 1623. *Contact:* Joseph Goody, 202–566–2974. *Status:* ANPRM under development.
Customs bonds, letter of credit/part 113.	*Description:* Authorize use of letter of credit in lieu of foreign-trade zone bond to guarantee payment of claims made by Customs against a foreign-trade zone operator. *Need:* To facilitate use of foreign-trade zones. *Authority:* 19 U.S.C. 81c, 1623. *Contact:* William Rosoff, 202–566–5856. *Status:* NPRM under development (consolidated with "Trade fairs," 147.45, below).
Contiguous countries; manifest discrepancies/part 123.9.	*Description:* Establish uniform procedures for handling manifest discrepancies of vehicles and certain vessels arriving from contiguous countries. *Need:* To facilitate entry of vessels and vehicles from Canada or Mexico. *Authority:* General. *Contact:* Donald Reusch, 202–566–5706. *Status:* NPRM published July 28, 1978 (43 F.R. 32817); Treasury decision under development.
Contiguous countries; railroad equipment/part 123.12.	*Description:* Admission of empty foreign railroad equipment without entry and payment of duty in certain instances. *Need:* To clarify permitted use of foreign railroad equipment. *Authority:* General. *Contact:* Michael Tomenga, 202–566–5706. *Status:* Work plan 79–18 under development.

Customs Service—Semiannual Agenda

Part I—Regulations Under Development

Title/citation (19 CFR —)	*Summary*
Contiguous countries; manifest validation/parts 123.41 and 123.42.	*Description:* Require truck driver carrying merchandise between the United States and Canada to present manifest for validation by U.S. Customs at U.S. port of departure. *Need:* Jointly initiated by United States and Canadian Customs to prevent evasion of duty when merchandise reenters the United States from Canada on in-transit documentation. *Authority:* 19 U.S.C. 1553, 1554. *Contact:* J. Bradley Lund, 202-566-5354. *Status:* NPRM published Dec. 9, 1976 (41 F.R. 53810); new NPRM under development.
Copyrights/part 133	*Description:* Amendments to regulations relating to recordation of copyrights with Customs. *Need:* To implement provisions of Public Law 94-533, "Copyright Act of 1976." *Authority:* 17 U.S.C. 1603. *Contact:* Samuel Orandle, 202-566-5765. *Status:* NPRM under joint development by Customs and Copyright Office.
Entry of merchandise; special permits for immediate delivery/parts 141 and 142.	*Description:* Revise consumption entry (Customs form 7501) to accommodate new entry procedures. *Need:* To implement provisions of Public Law 95-410, "Customs Procedural Reform and Simplification Act of 1978." *Authority:* 19 U.S.C. 1484. *Contact:* William Wagner, 202-566-5307. *Status:* Request for comments on the proposed form published May 23, 1979 (44 F.R. 29916); comments under review at Customs.
Entry and liquidation/parts 141, 142, and others.	*Description:* Amendments relating to the entry and liquidation of merchandise. *Need:* To implement provisions of Public Law 95-410, "Customs Procedural Reform and Simplification Act of 1978." *Authority:* 19 U.S.C. 467, 1315, 1484, 1504, 1505, 1520, 1559. *Contact:* Herbert Geller, 202-566-5307. *Status:* NPRM published Nov. 29, 1978 (44 F.R. 55774), T.D. 79-221 published Aug. 9, 1979 (44 F.R. 46794).

Customs Service—Semiannual Agenda

Part I—Regulations Under Development

Title/citation (19 CFR —)	*Summary*
Entry of merchandise/part 141.89	*Description:* To revise the additional information required on entry of footwear. *Need:* To assist Customs in the appraisement and classification of imported footwear. *Authority:* 19 U.S.C. 1202, 1481, 1484. *Contact:* Linda Mays, 202–566–2957. *Status:* NPRM published July 28, 1978 (43 F.R. 32819); after consideration of comments, a second NPRM under development.
Informal entries/part 143.23	*Description:* Provide for use of Customs form 7523 for informal entry of noncommercial, duty-free merchandise, regardless of value. *Need:* Public benefit and Customs convenience. *Authority:* General. *Contact:* Drury Williford, 202–566–5354. *Status:* Work plan 79–17 approved; T.D. 80–10 published Jan. 4, 1980 (45 F.R. 1012).
Foreign-trade zones/part 146.48	*Description:* Change of appraisement practice involving costs of processing and profit for certain merchandise produced in foreign-trade zones. *Need:* To encourage use of domestic labor and materials in foreign-trade zones. *Authority:* 19 U.S.C. 81h. *Contact:* Thomas Lobred, 202–566–2938. *Status:* NPRM published May 21, 1979 (44 F.R. 29489); Treasury decision in review at Treasury Department.
Trade fairs/part 147.45	*Description:* Removal of trade fair merchandise from foreign-trade zones for consumption without permission of Foreign-Trade Zones Board. *Need:* Amendments required to implement provisions of Public Law 91–692. *Authority:* 19 U.S.C. 81h. *Contact:* William Rosoff, 202–566–5856. *Status:* NPRM under development (consolidated with "Customs bonds, letter of credit," part 113, above)

Customs Service—Semiannual Agenda

Part I—Regulations Under Development

Title/citation (19 CFR —)	*Summary*
Registration of merchandise/part 148.1.	*Description:* New instructions for registration of personal effects taken abroad. *Need:* To insure uniform registration procedures. *Authority:* 19 U.S.C. 1498. *Contact:* Bernard Harris, 202–566–5354. *Status:* Work plan under development.
Personal declarations and exemptions/part 148.73.	*Description:* Execution of written baggage declarations by military personnel. *Need:* To conform Customs and DOD regulations. *Authority:* General. *Contact:* Donald Thompson, 202–566–5607. *Status:* NPRM under development.
Examination of merchandise/part 151.2.	*Description:* Expand accelerated cargo clearance and entry processing test (ACCEPT), an automated selective merchandise examination system, to various ports of entry. *Need:* Facilitate movement of merchandise by fewer but more intensive examinations. *Authority:* 19 U.S.C. 1202, 1499. *Contact:* Michael Lanoue, 202–566–8651. *Status:* Work plan 79–20 approved; NPRM in review at Treasury Department.
Appraisement of merchandise/part 152.	*Description:* Amendments required by new International Valuation Code agreed to in multilateral trade negotiations. *Need:* To implement title II, Customs Valuation, of Public Law 96–39, "Trade Agreements Act of 1979." *Authority:* General. *Contact:* Thomas Lobred, 202–566–2938. *Status:* Work plan 79–26 approved; NPRM under review at Treasury Department.
Recordkeeping, inspection, search, and seizure/part 162.47.	*Description:* Waiver of bond requirements by district director for individuals who show proof of inability to obtain bond. *Need:* Decisions of U.S. Courts of Appeals, *Wiren* v. *Eide*, 542 F. 2d 757 (9 Cir. 1976), and *Lee & Rich* v. *Thornton*, 538 F. 2d 27 (2 Cir. 1976). *Authority:* General. *Contact:* Joseph Priddy, 202–566–5746. *Status:* T.D. under development.

Customs Service—Semiannual Agenda

Part I—Regulations Under Development

Title/citation (19 CFR —)	*Summary*
American manufacturer's petitions/ part 175.	*Description:* Reflect extension of procedures applicable to American manufacturer's petitions to cases involving antidumping and countervailing duties. *Need:* To implement provisions of Public Law 93-618, "Trade Act of 1974." *Authority:* 19 U.S.C. 1516. *Contact:* John Elkins, 202-566-8237. *Status:* Withdrawn in light of Reorganization Plan No. 3 of 1979 (44 F.R. 69273) and Executive Order 12188 (45 F.R. 989) transferring function to Commerce Department.

Part II—Existing Regulations To Be Reviewed

Title/citation (19 CFR —)	*Summary*
Bond/part 18	*Description:* Transportation in bond and merchandise in transit. *Need:* To insure consistency of format and style. *Contact:* James Seal, 202-566-8237. *Status:* Customs review of draft completed; NPRM under development.
Finance/part 24	*Description:* Customs financial and accounting procedure. *Need:* To insure consistency of format and style. *Contact:* James Seal, 202-566-8237. *Status:* Customs review of draft completed; NPRM under development.
Duties/parts 10 and 54	*Description:* Articles conditionally free, subject to reduced rate, etc., and certain importations temporarily free of duty. *Need:* To insure consistency of format and style. *Contact:* Jenny Johnson, 202-566-8237. *Status:* Customs review of draft completed; NPRM under development.
Freedom of Information/part 103	*Description:* Availability of information. *Need:* To conform to amendments to Freedom of Information Act made by Public Law 93-502. *Contact:* John Roth, 202-566-8237. *Status:* NPRM published Aug. 20, 1979 (44 F.R. 48709); Treasury decision under development.

Customs Service—Semiannual Agenda

Part II—Existing Regulations To Be Reviewed—Continued

Title/citation (19 CFR —)	*Summary*
Drawback/part 22	*Description:* Drawback. *Need:* To modernize procedures relating to claims for drawback. *Contact:* George Steuart, 202-566-5856. *Status:* Preliminary draft in Customs review.

U.S. Customs Service

Customs Service Decisions

The following are decisions made by the U.S. Customs Service where the issues involved are of sufficient interest or importance to warrant publication in the CUSTOMS BULLETIN.

Dated: February 15, 1980.

HARVEY B. FOX,
Acting Director,
Office of Regulations and Rulings.

(C.S.D. 80-16)

Bonds: When Single Entry Bond Rather Than Antidumping Bond May Be Filed To Cover Merchandise Subject To Dumping Finding

Date: June 26, 1979
File: BON-1-R:CD:D
210324 L

Issue.—A domestic company imports merchandise subject to a finding of dumping from a nonrelated supplier. May the importer file a single entry bond, Customs form (CF) 7551, to cover the requirements of section 208 of the Antidumping Act of 1921, as amended (19 U.S.C. 167), or is an antidumping bond, CF 7591, required.

Facts.—An inquirer states it understands the Customs Service has ruled that an importer can file a single entry bond (immediate delivery and consumption entry bond (single entry) CF 7551) in lieu of an antidumping bond (CF 7591) to cover any dumping duties which may accrue if the parties to the import transaction are not related.

The inquirer points out that it has sold its interest in one foreign supplier and is no longer related to it. It further points out that it is not related to any other supplier from which it imports merchandise.

It suggests that some confusion may arise from its relationship with its foreign service company which it wholly owns. The service

company acts as its agent. Title to goods is never vested in the service company nor is the service company represented as the seller of the invoiced items. However, the service company uses its own letterhead in preparing the import invoices which may make it appear they are the actual supplier when they are not.

The inquirer requests a ruling as to whether it should file a single entry bond or an antidumping bond.

Law and analysis.—Section 207 of the Antidumping Act of 1921, as amended (19 U.S.C. 166), (the act) defines an exporter as follows:

> For the purposes of sections 160–171 of this title, the exporter of imported merchandise shall be the person by whom or for whose account, the merchandise is imported into the United States:
>
> (1) If such person is the agent or principal of the exporter, manufacturer, or producer, or;
>
> (2) If such person owns or controls, directly or indirectly, through stock ownership or control or otherwise, any interest in the business of the exporter, manufacturer, or producer; or
>
> (3) If the exporter, manufacturer, or producer owns or controls, directly or indirectly, through stock ownership or control or otherwise, any interest in any business conducted by such person; or
>
> (4) If any person or persons, jointly or severally, directly or indirectly, through stock ownership or control or otherwise, own or control in the aggregate 20 per centum or more of the voting power or control in the business carried on by the person by whom or for whose account the merchandise is imported into the United States, and also 20 per centum or more of such power or control in the business of the exporter, manufacturer, or producer.

Section 208 of the act (19 U.S C. 167) requires an importer to post a bond to obtain merchandise covered by a dumping finding unless the importer declares that he is not the exporter or states the exporter's sales price of that merchandise. Section 208 also sets the terms of the required bond. The bond is to guarantee that the importer will report the exporter's sales price within 30 days after the sale or sales agreement is made. The bond also guarantees that any lawful antidumping duty will be paid, that any information needed for appraisement known to the importer will be furnished to Customs, and that the importer will maintain all required records.

Section 153.50, Customs Regulations (19 CFR 153.50), provides in part that:

> When the district director * * * has been advised of a finding provided for in 153.43 * * * he shall withhold release of any merchandise * * * which is then in his custody * * * unless an appropriate bond is filed or is on file, as specified in 153.51 * * *.

Section 153.51, Customs Regulations (19 CFR 153.51), specifies that a single consumption entry bond, in addition to any other required bond, shall be furnished by the person making the entry or withdrawal unless the resale price of the merchandise in the United States is unknown. If the resale price of the merchandise in the United States is unknown, the bond required by section 208 of the act is Customs form 7591 (antidumping bond), and a separate bond is required for each entry or withdrawal, and is in addition to any other bond required by law or regulation.

In *Lagerloef Trading Co. (Inc.)* v. *United States*, Treasury decision (T.D.) 46288 (Cust. Ct. 1933), it was held that where goods are imported as to which the Secretary of the Treasury has made a finding of dumping as provided in section 201 of the act (19 U.S.C. 160), the filing of the antidumping bond provided for in section 208 of that act and T.D. 45474 is not a condition precedent to the delivery of the goods, provided "the person by whom or for whose account such merchandise is imported makes oath before the collector (now appropriate Customs officer), under regulations prescribed by the Secretary, that he is not an exporter," or "that such person declares under oath at the time of entry, under regulations prescribed by the Secretary, the exporter's sales price of such merchandise."

The inquirer states it is not related to the foreign supplier of merchandise subject to a dumping finding and that its wholly owned foreign agent never takes title to the merchandise nor represents itself as the seller of the merchandise. Under these circumstances, and providing the person by whom or for whose account the merchandise is imported makes oath that he is not an exporter, or declares under oath at the time of entry the exporter's sales price, an antidumping bond on CF 7591 is not required.

The Customs Service is not aware of any prior administrative ruling on this issue.

Holding.—Where the person by whom for whose account merchandise subject to a finding of dumping is imported makes oath before the appropriate Customs officer that he is not an exporter or declares under oath at the time of entry the exporter's sales price of the merchandise, an antidumping bond on CF 7591 is not required. The merchandise may be released upon filing of a single consumption entry bond covering the shipment as provided in sections 153.50 and 153.51, Customs Regulations (19 CFR 153.50 and 153.51).

(C.S.D. 80-17)

Carrier Control: Applicability of Coastwise Laws to time Chartered Vessel

Date: June 26, 1979
File: VES-3-11-R:CD:C
104044 JL

This ruling concerns the chartering for profit of a private pleasure vessel.

Issues.—1. Where a vessel is time chartered to a motion picture company for the purpose of making a film, will the actors and film crew personnel be considered passengers within the meaning of section 4.50(b), Customs Regulations?

2. Where a vessel departs from a U.S. port carrying passengers and returns to the same port where the passengers disembark and the vessel has not touched at another port, will the cruise be considered as coming within the prohibition of the coastwise laws?

Facts.—A U.S. corporation which owns a vessel which is restricted from engaging in the coastwise trade proposes to enter into an agreement with a motion picture production corporation under which the vessel, a 40-foot sloop which is documented as a U.S. pleasure vessel, would be used to film a motion picture. The vessel would be captained by an employee of the owner. Approximately six actors and appropriate film crew personnel would be carried on board each morning during the charter period, returning each night to the same port in Maine. The vessel would not transport the actors or film crew to different ports nor would it provide overnight accommodations. In consideration for the use of the vessel, the film production company would agree to pay the owner a specified percentage of the profits to be derived from the film.

Law and analysis.—Title 46, United States Code, section 289, provides that no unqualified vessel shall transport passengers between ports and places in the United States, either directly or by way of a foreign port, under a penalty of $200 for each passenger so transported and landed. Section 4.50(b), Customs Regulations, defines a passenger as any person carried on a vessel who is not connected with the operation of such vessel, her navigation, ownership, or business.

In headquarters ruling of December 15, 1975, file VES-3-11, case No. 101933, it was held that where a vessel prohibited from engaging in the coastwise trade was time chartered to a motion picture studio to go out 20 miles each day for purposes of motion picture photography and return to the same port, such voyages would not be in violation of the coastwise laws even if the time charterer's employees were con-

sidered passengers and their equipment merchandise. The ruling defined coastwise trade as transportation of passengers of merchandise or both between points in the United States, or on a voyage to and from the same point if solely within the U.S. territorial waters.

In regard to the first issue presented, in the case where the owner of a yacht is paid to carry a person or persons on his vessel who are connected with the actual operation, navigation, ownership, or business of the vessel, the owner is considered to be transporting passengers within the meaning of section 289. Both the person who hired the yacht and the members of his party, that is, his guests (or, as in the present case, his employees), are considered passengers within the meaning of the law.

We therefore conclude that under the facts presented, the motion picture crew and actors would be considered passengers under the coastwise laws and if the yacht makes a voyage from a port in Maine wholly within U.S. territorial waters, that is, within the 3-mile limit, a transportation of such passengers would have occurred in contravention of 46 U.S.C. 289. Conversely, if on each voyage the vessel goes out beyond the 3-mile limit, no coastwise transportation will have occurred, and the fact that the employees of the time charterer would have been considered passengers under the coastwise laws will not subject the master of the vessel to a penalty thereunder.

Holding.—1. Where a motion picture company time charters a noncoastwise qualified yacht, actors and other members of the film crew carried on board the vessel would be considered passengers for purposes of 46 U.S.C. 289 and section 4.50(b) of the Customs Regulations.

2. Where a noncoastwise qualified vessel departs from a U.S. port and accomplishes a voyage entirely within U.S. territorial waters and returns to the same port, a violation of the coastwise laws will have occurred. Where the voyage extends at some point beyond the 3-mile limit, that is, outside U.S. territorial waters, no coastwise violation will have occurred, and the fact that persons carried on board would be considered passengers within the meaning of 46 U.S.C. 289 will be irrelevant.

Effect on other rulings.—None.

(C.S.D. 80–18)

Resident Exemption: Household Effects; Time Limit for Free Entry of Household Effects Following Nonresident's Last Arrival

Date: June 26, 1979
File: ENT-6-01-R:E:E
710614 MC

This ruling concerns the interpretation of the phrase "the last arrival" in 19 CFR 148.52(d).

Issue.—Whether the latest visit back to an immigrant's former residence in another country constitutes "the last arrival" within the meaning of 19 CFR 148.52(d).

Facts.—Inquirer moved from Montreal, Canada, to the United States in 1964, leaving behind his family's household goods. Since that time he has made a number of trips back to Montreal, including visits within the past 10 years. His parents are now planning to leave the apartment in which they have lived since before their son moved out and he would now like to import some household effects used for more than 1 year.

Law and analysis.—Customs Regulations 148.52(a) provides that "usual household furnishings and effects actually used abroad for not less than 1 year by residents or nonresidents, and not intended for any other person or for sale may be allowed entry free of duty and tax." Section 148.52(d) stipulates that "household effects arriving more than 10 years after the last arrival of the importer from the country in which they were used shall not be admitted free of duty."

This regulation is concerned with the date of the last arrival of the importer from the country in which the effects were used, rather than the date of the importer's last residence in such country. Accordingly, the 10-year period begins to run after the last trip back to the foreign country. Personal visits are included as delaying the commencement of the 10-year, duty-exemption period.

Holding.—Return from the most recent visit back to a former residence in a foreign country is considered "the last arrival" for section 148.52(d) purposes.

313-579 O - 79 - 5

(C.S.D. 80-19)

Entry: Time Limit Concerning Submission of Documentary Evidence Supporting Claims for Reliquidation Under 19 U.S.C. 1520(c)(1)

Date: June 26, 1979
File: ENT-1-01-R:E:E
710523 M

This ruling reviews a protest against a district director's determination that an entry could not be reliquidated pursuant to section 520(c)(1) of the Tariff Act of 1930, as amended, because, although the claim was timely made, the documentary evidence to substantiate such claim was not made within the time limits of section 520(c)(1).

Issue.—Must the documentary evidence, which substantiates a claim for reliquidation pursuant to section 520(c)(1), be submitted with the time limits prescribed by that section?

Facts.—An entry was filed on July 20, 1976, for radiators as parts for "leveling, boring, and extracting machinery" under item 664.05 of the Tariff Schedules at a duty rate of 5 percent ad valorem and was liquidated on August 13, 1976, as entered.

On October 10, 1976, the importer submitted a request for reliquidation of the entry pursuant to section 520(c)(1) of the Tariff Act of 1930, as amended (19 U.S.C. 520(c)(1)) because the shipper had erred in noting on the invoices which accompanied the merchandise that the imported radiator assemblies were to be used in "off-highway track vehicles, the manufacture of ski lifts and the manufacture of potato harvesters." The importer contended that the radiators were in fact to be used as parts for vehicles of a type which would qualify as "motor vehicles" within the purview of schedule 6, part 6, subpart B of the tariff schedules and thereby such radiators would qualify for duty-free entry. In addition, the importer submitted literature which depicted the use of the radiators in such vehicles. However, parts for such vehicles are not automatically accorded duty-free status. Documentary evidence as to its intended use, in accordance with section 10.84 of the Customs Regulations, must be submitted. Such documentary evidence was not submitted with this request. On January 21, 1977, and again on May 26, 1977, the importer made requests for reliquidation of the entry pursuant to section 520(c)(1), Tariff Act of 1930, as amended. In both instances, the necessary documentary evidence was not submitted.

The necessary documentary evidence was not submitted, until it was submitted on October 7, 1977, with the importer's protest against the district director's failure to reliquidate his entry pursuant to section 520(c)(1). The district director notes that if the documentary

evidence had been submitted with any one of the three requests for reliquidation pursuant to section 520(c)(1) the request would have been granted. However, the district director denies the protest because the documentary evidence to substantiate the importer's section 520(c)(1) claim was not received within the time limits prescribed by section 520(c)(1).

Law and analysis.—Section 520(c)(1), Tariff Act of 1930, as amended, (19 U.S.C. 1520(c)(1)), in pertinent part, provides that Customs may reliquidate an entry to correct a clerical error, mistake of fact, or other inadvertence not amounting to an error in the constructions of a law, if such error, mistake, or inadvertence is brought to the attention of Customs within 1 year after the liquidation of the entry.

The Court of Customs and Patent Appeals in the *United States* v. *C. J. Tower & Sons of Buffalo, Inc.*, C.A.D. 1129 (1974), among other things, ruled that if an error is timely brought to Customs attention within the appropriate time period, the entry is entitled to be reliquidated pursuant to section 520(c)(1), even though the importer did not submit the documentary evidence to substantiate its claim until after the time limits of section 520(c)(1) have run. Therefore, the entry should be reliquidated pursuant to section 520(c)(1), Tariff Act of 1930, as amended.

Holding.—Since the claim for reliquidation pursuant to section 520(c)(1), Tariff Act of 1930, as amended, was timely made, the importer is entitled to the reliquidation of his entry pursuant to that section, even though the documentary evidence substantiating such claim was not made within the time limits of section 520(c)(1). The protest is therefore allowed in full.

(C.S.D. 80-20)

Country-of-Origin Marking: Dungarees Labeled With Trade Name Containing the Name of a Locality Other Than the Country of Origin

Date: June 26, 1979
File: MAR-2-05-R:E:E
710682 MC

This ruling concerns the country-of-origin marking of dungarees bearing the trademark "Rome 1001."

Issue.—Whether the special location and lettering size exception for trademarks and trade names using the name of a location in the United States, as provided by Customs Regulations section 134.47, extends to trademarks containing the name of a foreign city.

Facts.—Dungarees manufactured in Hong Kong are intended to be imported into the United States. Each pair of jeans will have a sewn-on textile label firmly and permanently affixed to the interior waistband clearly and legibly indicating the material used, the size and the model number of the garment, and the words "Made in Hong Kong." The exterior waistband and/or rear pocket will have a leather or metal label attached or lettering embroidered indicating the importer's trademark "Rome 1001." The exterior of the garment will also have a cardboard hang tag affixed to the garment by means of a plastic fastener, which would again display the trademark logo "Rome 1001" and indicate the country of origin as "Made in British Colony of Hong Kong by (name of manufacturer)."

Law and analysis.—Section 304 of the Tariff Act of 1930, as amended (19 U.S.C. 1304), requires that all articles imported into the United States be legibly, conspicuously, and permanently marked with the English name of the country of origin. Section 134.46 of the Customs Regulations further requires that where "the name of any city or locality in the United States, or the name of any foreign country or locality other than the country or locality in which the article was manufactured or produced" appears, the country-of-origin designation be "in close proximity to such words, letters, or name, and in at least a comparable size."

Section 134.47 provides a special exception where the city or locality name is part of a trademark or trade name. No "comparable size" requirement exists in such circumstances and the location of the country-of-origin marking can either be "in close proximity or in some other conspicuous location." However, unlike the "foreign country or locality" language in section 134.46, section 134.47 only mentions "the name of a location in the United States."

The rationale for granting a special exemption for trademarks and trade names containing the name of a domestic locality applies at least as strongly to trademarks bearing the name of a foreign locality. Accordingly, it is our opinion that the intent of section 134.47 was to include foreign trademark designations as well as domestic locales.

Holding.—Country-of-origin markings need not be in comparable size nor in close proximity (if in some other conspicuous location) to a trademark containing the name of a foreign locale. The markings appearing on the "Rome 1001" dungarees meet the requirements of section 134.47.

(C.S.D. 80–21)

Marking: Country-of-Origin Marking of Automotive Lamps Assembled Abroad From Components Made in the United States and Another Country

Date: June 27, 1979
File: MAR-1-01-R:E:E
710366 HS

This ruling concerns country-of-origin marking for 12-volt automotive lamps consisting of unbased lamps manufactured in Taiwan or Canada and American-made metal bases that are assembled in Mexico and being imported under the provisions of item 807.00, TSUS.

Issues.—1. What is the country of origin of the finished lamps?

2. Whether individual marking is required on lamps which are in packages that indicate the country of origin.

Facts.—Unbased lamps with filaments which have been evacuated of all atmosphere and sealed will be manufactured in Taiwan or in Canada and shipped directly to Mexico where they will be assembled to a metal base of U.S. origin to make a finished automatic 12-volt lamp that will be imported to the United States under the provisions of item 807.00, Tariff Schedules of the United States, American products exported and returned.

The completed lamps will be packaged in immediate containers of a blister pack with two lamps and an immediate container which will contain 10 of the same lamps for sale at retail in the United States.

Law and analysis.—1. Section 304 of the Tariff Act of 1930, as amended (19 U.S.C. 1304), provides in general that all articles of foreign origin imported into the United States must be legibly and conspicuously marked to indicate the English name and the country of origin to an ultimate purchaser in the United States.

Section 134.1, Customs Regulations, defines "country of origin" as the country of manufacture, production, or growth of any article of foreign origin entering the United States. Further work or material added to an article in another country must effect a substantial transformation in order to render such country the country of origin.

In this case, unbased lamps that are made in Taiwan or Canada are assembled with American-made metal bases in Mexico. The unbased lamp becomes an integral part of the finished based lamps by the combining process. The assembly process is an intricate one and the unbased lamp is substantially transformed into a new and different product. The unbased lamp would have no functional value without being combined with the metal base.

Because the base of the lamp is manufactured in the United States, the lamp will be imported to the United States under the provisions of item 807.00, Tariff Schedules of the United States, which permits a reduced duty treatment for the value of components manufactured in the United States and assembled abroad. Section 10.22, Customs Regulations, provides that assembled articles entitled to the item 807.00, TSUS, reduced duty are considered products of the country of assembly for the purpose of country-of-origin requirements.

As Mexico is the country of assembly and the assembly process involves substantial transformation of the Taiwan/Canadian-made components, Mexico is the country of origin of the finished automotive lamps. Therefore, it would be acceptable for each brass base to have "Mexico" etched on it legibly, permanently, and indelibly in a conspicuous location.

2. The finished lamps are to be packaged in 10-packs and blister packs containing two lamps. The inquirer asks whether marking the immediate containers with the country of origin would be sufficient. The inquirer states that an ultimate consumer will be the purchaser of a blister pack containing two lamps, but the purchaser of a 10-pack may, or may not, be the ultimate consumer "because it is considered possible that individual lamps from the container may be further distributed by mechanics or service stations to other ultimate consumers."

Section 134.1, Customs Regulations, defines "ultimate purchaser" as generally the last person in the United States who will receive the article in the form in which it was imported. The purpose of the marking requirements is to enable the ultimate purchaser to decide whether to buy goods with knowledge of the goods' country of origin.

Section 134.32(d), Customs Regulations, provides an exception to individual marking requirements for articles for which the marking of the containers will reasonably indicate the origin of the article. The exception cannot apply, however, if containers will not remain intact, but be broken up for distribution to ultimate purchasers. As this is anticipated by the inquirer for the 10-packs, individual marking is required on all automotive lamps that are sold in 10-packs. However, as the ultimate purchaser will be the purchaser of a blister pack containing two lamps, the marking of the blister pack container with the country of origin will be sufficient for the two-pack.

Holding.—The country of origin of the 12-volt automotive lamps is Mexico. All the lamps contained in a 10-pack must be individually marked while it is only necessary to mark the immediate containers of the blister packs containing two lamps.

(C.S.D. 80-22)

Classification: Ski Hats

Date: June 28, 1979
File: CLA-2:R:CV:MA
062070 c

This ruling concerns the tariff classification of a ski hat.

Facts.—The sample is a ski hat made of 100 percent acrylic yarn, of knitted construction, which has an elastic band inserted into the edge of the hat.

The sample hat may be worn in two ways. It may be worn with the hat folded at the bottom to form a cuff, or it may be worn with the hat not folded in the manner of a ski hat.

The inquirer maintains that it is generally the practice that knitted hats, in order to fit snugly around a person's head, have an elastic band inserted either at the edge of the hat, or in the case of a hat which is turned up to form a cuff, near the part where the crease of the cuff is located. For this reason he suggests that the hat is properly classifiable under the provision for headwear, of manmade fibers: Wholly or in part of braid, in item 703.05, Tariff Schedules of the United States (TSUS), and dutiable at the rate of 18 percent ad valorem.

Issue.—Whether the hat is classifiable as claimed by the inquirer or is classifiable under the provision for headwear, of manmade fibers: Not in part of braid: Knit, in item 703.10, TSUS, and dutiable at the rate of 25 cents per pound plus 20 percent ad valorem.

Law and analysis.—It should be noted that in the instant case the braid is present in the form of a concealed tubular braid with an elastic core. Inasmuch as it is concealed it cannot be considered ornamentation.

General headnote 9(f) (iv), TSUS, provides that: "For the purposes of the schedules, unless the context otherwise requires—(f) the term 'of,' 'wholly of,' 'almost wholly of,' 'in part of' and 'containing,' when used between the description of an article and a material (e.g., 'furniture of wood,' 'woven fabrics, wholly of cotton'), have the following meanings (iv) 'in part of' or 'containing,' mean that the article contains a significant quantity of the named material." It is also noted that general headnote 9, TSUS, also provides that the de minimus rule apply.

Our interpretation of the word "significant," as used in the above-cited headnote, implies a degree of usefulness, being meaningful or necessary, or denoting employment for a reason. Thus, an item would

contain a significant quantity of braid if that portion or quantity serves a useful purpose and/or increases the saleability of the article.

An examination of the sample hat shows that it is made of jersey knit, 100 percent acrylic, spun staple fiber yarn. Unlike textured yarn, spun staple fiber yarn does not exhibit any significant stretch when subjected to tension. By way of contrast, a textured yarn exhibits varying degrees of stretch depending on the texturing process employed.

The primary difference in the uses of spun staple fiber yarn and textured filament yarn is their degree of stretchability when used in a knit fabric. Since a textured yarn can be stretched longitudinally as well as twisted or bent, the stretchability is enhanced over that exhibited by a spun staple yarn used in a knit fabric.

Spun staple yarn is generally used in applications which do not require a high degree of stretch. Hats, sweaters, gloves, and scarves are the most common applications. The so-called stretch (textured) yarns are primarily used in active-type wear, body supporting garments such as swimwear, hosiery, certain athletic uniforms, etc., which require a high degree of stretchability. In such applications the fabric must have "give" to accomodate extremes of movement in the knees, elbows, and back, for example. Whereas, for the hat in issue, the stretchability of the fabric is necessary simply for a snug fit.

The inquirer claims that the elastic makes up for a loss in stretchability with repeated usage. The primary cause for the loss of stretchability in a knitted fabric is slippage of the yarn through the knit structure. The knit structure of the hat before us is of relatively closed configuration. The thickness of the yarn is comparable to the size of the knit stitch by a ratio of approximately 1:3. Since each knit stitch contains two thickness of yarn, the yarn fills almost all the space in the knit structure.

It should be noted that slippage of the yarn through the knit structure, when tension is applied along the courses, is directly related to the extent of the compression of the courses. The thicker the yarn is in comparision to the knit stitch size, the less the courses can be compressed, and, thus, the less slippage occurs.

In a closed-knit structure such as that which appears in the sample hat, the relative thickness of the yarn compared to the knit stitch size effectively prevents excessive compression of the courses and thus precludes slippage of the yarn, resulting in a fabric with good stretchability. Consequently, it is our position that the presence if the braid in the hat is not significant because the knitted construction of the hat gives it sufficient stretchability thus rendering the elastic braid an unnecessary addition.

Holding.—The sample hat is dutiable at the rate of 25 cents per pound plus 20 percent ad valorem under item 703.10, TSUS.

We are forwarding a copy of your inquiry to our Duty Assessment Division which will furnish you with information concerning the stastical suffixes and textile category designations applicable to the merchandise described above.

(C.S.D. 80-23)

Country-of-Origin Marking: Watchcases Assembled Abroad From American Casebacks and Foreign-Made Bezels

Date: June 29, 1979
File: MAR-2-05-R:E:E
710710 HS

This ruling concerns country-of-origin marking on watchcases assembled in a foreign country, the casebacks of which are of U.S. origin, when the watchcases are assembled into complete watches and then imported.

Issue.—How should watchcases assembled in a foreign country consisting of American-made casebacks and foreign-made bezels be marked when they are assembled into complete watches before importation?

Facts.—Watch casebacks of U.S. origin are shipped to Europe where they are assembled with European-made bezels and waterproof tested. They are then shipped to the Far East for assembly into complete watches. The watches are then imported into the United States.

Law and analysis.—Schedule 7, part 2, subpart E, headnote 4, Tariff Schedules of the United States (1978) sets forth special marking requirements for watches. According to these requirements, watchcases are to be marked in the inside or outside of the back cover to show the name of the country of manufacture and the name of the manufacturer or purchaser. The country of manufacture in this requirement refers to where the case was manufactured, rather than where the watch was made.

The special marking requirements set forth by the Tariff Schedules do not apply to American-made components of imported watches. Therefore, if the watchcase is considered to be American made, it would not be necessary for the watchcase to be marked.

In this instance, the watchcase consists of an American-made caseback combined with a European-made bezel and the watchcase is assembled in Europe. The question becomes whether the caseback is

substantially transformed into a new and different product by the addition of the bezel.

Without the bezel, the caseback cannot serve as a watchcase. The caseback loses its identity by being combined with the bezel and becomes an integral part of a watchcase. Further, the caseback has little or no value as an item of commerce apart from being part of a watchcase. Therefore, the American-made caseback is substantially transformed into a new and different product, a European-made watchcase, and it is necessary for the watchcase to be marked according to the special requirements set forth by the Tariff Schedules.

Holding.—Watchcases, consisting of American-made casebacks and foreign-made bezels, that are assembled in a foreign country, must be marked to indicate the country of assembly as the country of manufacture, pursuant to the special marking requirements of the Tariff Schedules of the United States.

(C.S.D. 80–24)

Temporary Importations Under Bond: Whether Drugs Imported for Testing Are Considered To Be Destroyed Because Lack of FDA Approval Makes Them Unmarketable

Date: June 30, 1979
File: CON–9–09 R:CD:D B
210532

Issue.—Are drugs entered under item 864.30, TSUS, free of duty under temporary importation bond for testing considered destroyed within the meaning of headnote 3, schedule 8, part 5, subpart C, TSUS, when such drugs are used for stability testing and cannot be marketed since they have no commercial value?

Facts.—A U.S. corporation imports from its parent foreign corporation certain drugs for testing. These drugs cannot be marketed because they have not been approved by the Food and Drug Administration. One of the tests required by the FDA is one for stability or "shelf life." The importer/corporation freely admits that the stability testing will extend longer than the bond period, or any extensions thereof, but claims that because the drugs cannot be marketed lacking FDA approval, they have effectively been destroyed within the meaning of the above-cited headnote to the tariff schedules.

Law and analysis.—Item 864.30, TSUS, allows the free importation under temporary importation bond for articles intended solely for testing, experimental, or review purposes. To satisfy the bond and

avoid liquidated damages, articles entered for testing must be exported or destroyed within 1 year. This period may be extended for one or more further periods which when added to the initial 1 year, shall not exceed a total of 3 years.

Headnote 3, schedule 8, part 5, subpart C. TSUS, provides:

> Upon satisfactory proof that any article admitted under item 864.30 has been destroyed because of its use for any purpose provided for therein, the obligation under the bond to export such article shall be treated as satisfied.

It is clear that the testing for stability does not destroy these drugs, unless it can be shown that their life on the shelf has depreciated them to the point that they have no value and cannot be used for any useful purpose. However, the importer does not allege this, but claims these drugs are destroyed because they must remain on the shelf and cannot be marketed without FDA approval. There is a vast difference between the two foregoing situations.

These drugs do have commercial value; not in the sense of being saleable to the public, but in the sense that the data obtained from the stability testing represent a substantial commercial asset to the importer.

The Customs Court and its predecessor, the Board of Appraisers, have consistently held that the privilege of free entry under temporary importation bond must be "strictly construed." *American Gas Accumulator Co.* v. *United States*, 56 Treas. Dec. 368, at 370, T.D. 43642 (October 29, 1929). The board, noting that of three acetylene gas drums which had been substantially damaged in testing, one had been sold as scrap, the other two salvaged. The Board of Appraisers assumed by "salvage" that "the merchandise was either put to *some valuable use* or some substantial amount was received for it". 56 Treas. Dec., at 369 [italic added]. It cannot be easily denied that drugs undergoing stability testing are being put to valuable use. Further, the Board of Appraisers and the Customs Court consistently used language similar to: "(An article) is destroyed when its value, usefulness, and that which makes it what it is are completely lost." *United States* v. *Pastene & Co.*, 22 Treas. Dec. 725, at 727, T.D. 32458 (April 17, 1912). Any article undergoing testing has not lost its value or usefulness while it remains under testing, unless it is destroyed by the testing. The Customs Court has continued to follow this reasoning: To be considered destroyed, "total destruction rendering an article utterly worthless is necessary." *H. A. Johnson Co.* v. *United States.*, 21 Cust. Ct. 56, at 61, C.D. 1127 (August 25, 1948).

Finally, the Customs Service, not only under the present law but under its predecessor, section 308(4), Tariff Act of 1930, as amended, has

repeatedly ruled that substances or drugs imported for testing which are not destroyed or consumed by such testing, must be destroyed. See the following: Bureau letter to Collector of Customs, Tampa, May 17, 1956 (516.23) (fructose used as test with diabetics); Bureau letter to law firm of O'Connor & Farber, September 12, 1955 (412.6) (common cold medicine for distribution as part of a test); Bureau letter to Collector, Indianapolis, August 8, 1955 (516.23) (tablets used for testing on persons suffering from hypertension).

Holding.—While undergoing stability testing, these drugs are not considered destroyed within the meaning of headnote 3, schedule 8, part C, TSUS, unless it can be shown that because of the length of such testing, the drugs have completely deteriorated. The drugs which have not completely deteriorated must be exported timely or the importer will incur liquidated damages.

This matter should be referred to the agent in charge. If it can be shown that the importer knew at the time of importation the drugs could not be timely exported within the bond period or any extensions thereof, there is a strong possibility that section 1592, title 19, United States Code, has been violated.

(C.S.D. 80-25)

Collections and Refunds: Special Tonnage Taxes and Light Money

Date: July 3, 1979
File: VES-11-11-R:CD:C
103848 KP

To: Regional Commissioner of Customs, Baltimore, Md.

From: Acting Director, Carriers, Drawback and Bonds Division.

Subject: Request for Internal Advice—Collection of Special Tonnage Tax and Light Money.

This refers to a memorandum of January 31, 1979 (VES-11-RO:IC T), requesting internal advice relating to the collection of special tonnage tax and light money under the provisions of sections 4.20(c) and 4.22, Customs Regulations.

Your specific questions with our responses are set forth in the order asked.

1. Are vessels under the following registry subject to special tonnage tax and light money: Bahamas, Bangladesh, Libya?

With respect to Bangladesh and the Bahamas, we have received assurances from the State Department that will, in time, no doubt place the vessels of these nations on the exempt list. However, certain mechanics must first take place that are still in process. Therefore,

vessels of Bangladesh and the Bahamas are subject to the payment of special tonnage taxes and light money.

Registered vessels of Libya are exempt from the payment of special tonnage tax and light money retroactive to September 1, 1969, under T.D. 78–451, dated November 7, 1978. The addition of Libya to the list of countries in section 4.22, Customs Regulations, has not yet been published.

2. Is a country exempt if it is still under the rule of its mother country, i.e., Netherland Antilles?

Under the Treaty of Friendship, Commerce and Navigation, entered into force December 5, 1957, between the United States and the Kingdom of the Netherlands, exemption from the payment of special tonnage tax and light money was granted to vessels under the flag of the Netherlands. However, article XXIV provided that the treaty shall not apply with respect to Surinam or the Netherland Antilles, until 1 month after the receipt by the United States of notification of such application by the Kingdom of the Netherlands. While we have not received the assurances required by the treaty and Surinam and the Netherland Antilles have therefore not qualified for the exemption under the terms of the treaty, Surinam subsequently applied for exemption and in T.D. 78–157, dated May 23, 1978, vessels under the flag of Surinam were granted exemption from the payment of special tonnage tax and light money. Vessels of the Netherland Antilles are not so exempt.

3. Are there limitations on collecting special tonnage taxes and light money from previous arrivals?

We know of no limitations on collecting special tonnage taxes and light money from previous arrivals. We attach herewith a copy of a legal memorandum relating to this issue.

(C.S.D. 80–26)

Carrier Control: Entry of Vessels Arriving From the High Seas

Date: July 6, 1979
File: VES–5–R:CD:C/VES–9
104017 MKT

This ruling concerns the entry of vessels arriving in the United States from the high seas whose crewmembers have traveled to a foreign country for shore leave.

Issue.—Whether a vessel arriving in the United States from the high seas must make entry pursuant to title 19, United States Code, section

313-579 O - 79 - 4

1434 or 1435, merely because its crewmembers have been transported by launch from the vessel to a foreign port or place for shore leave.

Facts.—Crewmembers of vessels which lighter crude from storage vessels located on the high seas travel by launch from the vessels at a point on the high seas to Panama for shore leave. The lightering vessels then proceed to the United States.

Law and analysis.—Title 19, United States Code, section 1434, requires U.S. vessels arriving from a foreign port or place to make entry. Section 1435 of title 19 requires any foreign vessel to make entry whenever it arrives in any Customs collection district, unless otherwise exempted by stature.

As we advised you in our ruling of March 12, 1976 (copy enclosed), when a U.S. vessel arrives in the United States from the high seas, no entry is required. A foreign vessel arriving under the same circumstances is required to make entry. The U.S. vessel is not required to make entry because it has not made contact with a foreign port or place within the meaning of section 1434. A "foreign port" is defined as "a port or place exclusively within the sovereignty of a foreign nation." *The Winnie*, 65 F. 2d 706, 707 (3d Cir. 1933). In this case, although crewmembers have visited a foreign port or place, the vessel has remained on the high seas, outside the territorial waters of any foreign nation. Therefore, we do not consider the vessel to have arrived from a foreign port or place. Nevertheless, the crewmembers will be required to declare any articles purchased abroad upon the arrival of the vessel in the United States, in compliance with section 148.62, Customs Regulations. Regardless of whether a foreign vessel has touched a foreign port or place, unless otherwise exempt, it is required to make entry.

Holding.—A U.S. vessel arriving in the United States from the high seas is not required to make entry in accordance with section 1434 of title 19 merely because its crewmembers have traveled by launch from that vessel to a foreign country for shore leave. Unless exempted by statute, a foreign vessel must make entry in accordance with section 1435 whenever it arrives in any Customs collection district.

(C.S.D. 80-27)

Generalized System of Preferences: Substantial Transformation of Rattan; Pulling, Straightening, Cutting To Size, and Soaking

Date: July 9, 1979
File: R:CV:S JLV
061412

This is our response to your request for internal advice (No. 103/79), dated May 11, 1979, concerning metal-frame furniture containing rattan materials. Specifically, you raise the question as to whether the rattan, imported into Haiti, is a substantially transformed constituent material of the furniture for purposes of the Generalized System of Preference (GSP). The classification of the article imported into the United States is not an issue raised in your request.

Issue.—Does the pulling, straightening, cutting to size, and soaking substantially transform imported rattan into a material produced in Haiti within the meaning of section 503(b)(2)(A)(i) of the Trade Act of 1974 and section 10.177(a)(2) of the Customs Regulations?

Facts.—Rattan reeds are imported into Haiti and used in the manufacture of metal-frame furniture classifiable under item 727.55, Tariff Schedules of the United States (TSUS). For purposes of the GSP, Haiti is a beneficiary developing country (BDC) and articles imported under item 727.55, TSUS, are designated as eligible for duty-free treatment.

The rattan reeds are imported in bundles weighing 110 pounds. The bundled reeds vary in widths of approximately 3.25 millimeters and 4.25 millimeters and in lengths of 10 to 12 feet. After the bundles are opened, the rattan reeds are pulled, straightened, and cut to size (length) for weaving. The reeds are then soaked in water to soften them and to make them manageable for weaving. While still soft and pliable, the processed rattan needs are woven onto metal frames. The woven rattan is then finished by drying, burning, and sanding to remove fray and fuzz resulting from the weaving process. The article is then ready for exportation.

Law and analysis.—Under the provisions of the GSP, an eligible article may be imported free of duty if it otherwise qualifies. One such qualifying requirement is a value-added requirement. That is, the sum of (1) the cost or value of materials produced in the BDC and (2) the direct costs of processing operations performed in that BDC must not be less than 35 percent of the appraised value of the eligible article at the time of its entry into the customs territory of the United States. The question presented in this case is whether the imported

rattan may be considered a "material produced" in Haiti for purposes of the value-added requirement.

Under section 10.177(a)(2) of the Customs Regulations (19 CFR 10.177(a)(2)), a material imported into a BDC may be considered a material produced in that BDC if it is substantially transformed in the BDC into a new and different article of commerce prior to being used in the production of the eligible article. It is claimed that the imported rattan is substantially transformed into a constituent material by the pulling, straightening, cutting to length, and soaking operations. Headquarters letter dated April 26, 1976 (file 044602), concerning leather cut into shapes and forms for gloves, is cited as support.

Mere cutting to length is not a processing operation which results in a substantial transformation. In this case, the rattan reeds are merely cut to manageable lengths for weaving. The cited letter (file 044602) concerned a cutting operation which resulted in leather glove components of specific sizes, shapes, and patterns. Such a situation is clearly distinguishable from the instant case and is not applicable here.

The straightening and soaking operations merely place the imported rattan into a physical condition suitable for weaving. The processing does not result in an intermediate product prior to the weaving of the rattan into the eligible article. It is our opinion that such processing does not result in a new and different article of commerce within the meaning of section 10.177(a)(2) of the Customs Regulations.

Holding.—The pulling, straightening, cutting to length, and soaking of imported rattan does not result in a substantial transformation of the rattan under the law and regulations of the GSP.

(C.S.D. 80-28)

Entry: Whether Consumption and Warehouse Entry Summaries May Be Filed for Different Portions of the Same Shipment of Merchandise

Date: July 10, 1979
File: ENT-1-01-R:E:E
710521 M

This ruling concerns the question as to whether a consumption entry summary may be filed for part of a shipment and a warehouse entry summary for the remainder of the shipment when the entire shipment was transported under one immediate transportation entry.

Facts.—A shipment of merchandise is transported inbond under one immediate transportation entry in installments from Seattle to Chicago. At Chicago, the importer desiring to obtain release for consumption on a portion of the shipment and to place in a bonded Customs warehouse the remainder of the shipment files two entries, as the term is understood under the new entry procedure established by Public Law 95–410. (Under this new entry procedure, the releasing document is referred to as the entry, and the followup document setting forth information needed for duty determination and statistical purposes is called the entry summary.) One entry would specify that a consumption entry summary will be filed for that portion of the shipment, whereas the other entry would specify that a warehouse entry summary will be filed for the remainder. Subsequently, a consumption entry summary is filed for the part of shipment indicated on the first entry, and a warehouse entry summary is filed for the remainder of the shipment indicated on the latter entry.

The district director believes that this procedure is precluded by 19 U.S.C. 1484(f) and sections 141.55 and 141.52(c) of the Customs Regulations.

Issue.—May a consumption entry summary be accepted for part of a shipment and a warehouse entry summary accepted for the remainder when the shipment was originally transported to the port of destination inbond under one immediate transportation entry?

19 U.S.C. 1484(f) and section 141.55 of the Customs Regulations, in pertinent part, provides that the district director is authorized to accept an entry for consumption or for warehousing for the entire quantity of merchandise covered by an entry for immediate transportation after the arrival of any part of such quantity at the port of destination.

Section 141.52(c) provides, in pertinent parts, that separate entries may be made for different portions of a shipment if the consignee desires to enter different portions under different forms of entry, for transportation to different ports of entry, or for warehousing in separate warehouses.

Since both 19 U.S.C. 1484(f) and section 141.55 of the Customs Regulations, in effect, provide that the district director is "authorized to accept" one entry summary for a shipment arriving under an immediate transportation entry, we believe that this language is permissive and neither mandatory nor restrictive. Such language would not authorize the district director to require only one entry summary in such circumstances. Whether or not one entry summary should be filed would be left to the discretion of the importer. If the importer decided to file one entry summary for such shipment, the

district director would have the authority to accept such entry summary.

In support of his contention that such language is mandatory rather than permissive, the district director notes that Customs headquarters issued Legal Determination 3550–16 which set forth circumstances when one entry summary may be accepted by the district director for a shipment arriving under one immediate transportation entry or multiple immediate transportation entries. This legal determination arose out of the desire by importers and brokers to file one entry summary for such shipments and the necessity by Customs to issue guidelines in regard to the circumstances as to when one entry summary may be accepted.

The district director also refers to Manual Supplement No. 3551–01 and suggests that this supplement set forth the general rule of "one shipment, one consignee, one entry." This statement merely repeats the general rule as set forth in section 141.51 of the Customs Regulations. The exceptions to the general rule are set forth in section 141.52 of the Customs Regulations and are so noted in this manual supplement.

The district director believes that the phrase "different forms of entry" as used in section 141.52(c) is qualified by the last two clauses in that section and hence only permits the filing of transportation entries and entries for warehouse (now referred to as warehouse entry summaries) for one shipment. This phrase, under the district director's interpretation, would not apply to consumption entry summaries. Therefore, under his interpretation, warehouse entry summaries and consumption entry summaries could not be filed for the same shipment.

We believe that, on the contrary, section 141.52(c) sets forth three different circumstances whereby the filing of separate entry summaries are permissible and that the last two clauses do not modify the first clause. We believe that the first clause which states that "The consignee desires to enter different portions under different forms of entry, * * *" is self-sufficient and includes both consumption entry summaries and warehouse entry summaries. The second clause addresses a different situation and is concerned when merchandise is being transported to different ports of entry, and the third clause is concerned about another situation in which merchandise is being warehoused in separate warehouses. Under situation two or three, you are not speaking in terms of different forms of entry, but are concerned about filing more than one type of the same entry for the circumstance involved.

The district director notes that, instead of filing a consumption entry summary for a portion of the merchandise and a warehouse entry summary for the remaining merchandise in that shipment, the same result could be obtained if the importer filed a warehouse entry summary for the entire shipment and immediately filed a warehouse withdrawal for consumption for that portion of the merchandise he desires to enter for consumption. The district director believes that requiring the importer to file a warehouse entry summary for the entire portion of the merchandise would result in a quicker payment of the estimated duties because such duties for that portion of merchandise he desires to immediately enter for consumption must be paid when he files the warehouse withdrawal.

We note that the district director in arriving at this determination is making a couple of assumptions that may or may not apply depending upon the circumstances and that depending on the circumstances his requirement could result in a later payment, rather than an earlier payment, of duty. First, after the merchandise is released under the entry document the importer has 10 working days to file the appropriate entry summary, irrespective of whether it is a warehouse entry summary or a consumption entry summary. Thus, although importers may generally file a warehouse entry summary at time of release or shortly thereafter, they could wait until the 10th day after release before filing such entry summary. Second, the district director is assuming that the importer desires to obtain that portion of the merchandise designated for consumption immediately. There is no requirement that merchandise placed in a Customs-bonded warehouse must be withdrawn immediately. The importer has up to 5 years from the date of the importation of such merchandise to withdraw it. However, when a consumption entry summary is filed with Customs, the importer is required to deposit with that entry summary the estimated duties.

Holding.—A consumption entry summary may be filed at the port of final destination for part of a shipment and a warehouse entry summary for the remainder of the shipment, even though the entire shipment was transported inbond under one immediate transportation entry from the port of arrival to the port of final destination.

(C.S.D. 80-29)

Marking: Country-of-Origin Marking on Disposable Container Packaging

Date: July 10, 1979
File: MAR 2-05 R:E:E
709707 JB

This ruling concerns the legend on disposable container packaging with the name and address of the distributor and the legend "Country of Origin on Contents" when the contents for sale at retail, such as garments, are not excepted from country-of-origin marking.

Issue.—May the marking on packaging indicating the name, address, and ZIP code of the distributor followed by the statement "Country of Origin on Contents" be used to satisfy country-of-origin marking requirements when the labels or tags attached to the contents are required to indicate the name of the country of foreign origin?

Facts.—The U.S. distributor imports garments and other products individually packaged for sale at retail to ultimate purchasers in disposable containers, generally in polybags or polywrap. If an immediate container reasonably indicates the country of origin of the contents, an article may be excepted from origin marking (19 U.S.C. 1304 (a) (3) (D)). In the case of imported wearing apparel, however, labels or tags are attached to the garments to indicate the country of origin and to conform to additional requirements of the Textile Fiber Identification Act, Wool Products Labeling Act, and the Fair Packaging and Labeling Act.

The distributor's practice is to purchase the packaging in bulk and to export the containers to a variety of foreign suppliers. The company states that when the specific name of the country of origin must follow its name and address (19 CFR 134.46 and 19 CFR 134.22(c)), additional costs and complexities arise due to shorter production runs for the printed packaging, the maintenance of an increased number of unit containers in inventory, and difficulties in the distribution of the packaging for use by its manufacturers abroad.

The distributor places its name, address, and ZIP code on consumer packaging in order to comply with the laws of States which have adopted the Model State Packaging Law which requires products subject thereto to bear the name, address, or locality, and ZIP code of the manufacturer, distributor, or packer. The Federal Fair Packaging and Labeling Act (15 U.S.C. 1451 et seq.; 16 CFR 500.5) contains similar requirements for consmer commodities.

Law and analysis.—19 CFR 134.46 provides that where the name of any locality in the United States (or the words or letters "United

States," "American," "U.S.A.," or any variation thereof) appears on an imported article or its container, the name of the country of origin of the imported article must appear conspicuously and in close proximity to such locality in letters of comparable size preceded by "Made in," "Product of," or other words of similar meaning; 19 CFR 134.22 (c) reflects the provisions of 19 CFR 134.46, as applied to containers or holders bearing a U.S. address. The purpose of this requirement is is to obviate a misleading impression or any false representation to the ultimate purchaser that the article is of U.S. origin.

The proposed country-of-origin legend is not misleading or in contravention of 19 CFR 134.46 if the marked contents are packaged in disposable containers normally opened by a purchaser at retail prior to sale, e.g., a polybag with slit, envelope-type opening, or a sealed, disposable container where the origin marking is visible to the ultimate purchaser without unpacking. In the case of foreign goods which are excepted from origin marking if the country of foreign origin appears on the immediate containers (19 U.S.C. 1304 (a)(3)(D)), however, the country of origin must be affixed in close proximity to the legend.

Holding.—A marking legend "Imported and Distributed By *Name, address, and ZIP code,* Country of Origin on Contents," is an acceptable method of marking on disposable containers when the contents are labeled or tagged to indicate the specific name of the country of foreign origin, provided the labels or tags are clearly visible without unpacking or the contents are packed in containers that are normally opened by the ultimate purchaser at retail prior to sale. However, the name of the specific country of origin must be affixed in close proximity to the legend on the container if the contents are excepted from country-of-origin marking.

(C.S.D. 80-30)

Prohibited and Restricted Importations: Copyright Infringement; Book With Art Reproductions and Textual Commentary

Date: July 10, 1979
File: CPR-5-R:E:E
709582 SO

This ruling concerns the manufacturing requirements of the Copyright Act of 1976 and the possible applicability of the restrictions thereunder to the importation of the book, "The Armand Hammer Collection: Four Centuries of Masterpieces," manufactured in Japan.

Issue.—Would the importation into the United States of a book entitled "The Armand Hammer Collection: Four Centuries of Masterpieces," be restricted or prohibited by the "manufacturing clause" of the 1976 U.S. Copyright Law (17 U.S.C. 601)?

Facts.—A New York publisher intends to manufacture a book in the English language in Japan. The work will consist of 290 pages with 115 full-page, full-color illustrations of paintings, drawings, water colors, and pasters that together form most of the art collection of Dr. Armand Hammer. The work will have a suggested retail price of $75. The textual portions of this volume were written by a distinguished American art expert. The textual portions are comprised chiefly of introductory material on the life of Dr. Hammer and the formation of his collection and individual commentaries on each of the illustrations of the works of art in the collection. A complete mockup of the work was submitted along with a letter from the New York publisher expressing the opinion that the introductory material and the individual commentaries on each work of art reproduced are secondary and ancillary to the reproductions of the works of art themselves.

Law and analysis.—In general, section 601(a) of the 1976 Copyright Law prohibits the importation into or public distribution in the United States of "a work consisting preponderantly of nondramatic literary material that is in the English language and is protected under this title," unless the portions consisting of such material have been manufactured in the United States or Canada. The manufacturing requirements would not extend to dramatic, musical, pictorial, or graphic works; foreign-language works and bilingual or multilingual dictionaries; or public domain material.

The Senate report on the 1976 Copyright Law Revision (No. 94–473) states that:

> A work containing "nondramatic literary material that is in the English language and is protected under this title," and also containing dramatic, musical, pictorial, graphic, foreign-language, public domain, or other material that is not subject to the manufacturing requirement, or any combination of these, is not considered to consist "preponderantly" of the copyright-protected, nondramatic, English language, literary material unless such material exceeds the exempted material in importance. Thus, where the literary material in a work consists merely of a forward or preface, and captions, hearings, or brief descriptions or explanations of pictorial, graphic, or other nonliterary material, the manufacturing requirement does not apply to the work in whole or in part. In such case, the nonliterary material clearly exceeds the literary material in importance, and the entire work is free of the manufacturing requirement.

We are of the opinion that the book, "The Armand Hammer Collection: Four Centuries of Masterpieces," is the type of work discussed in the excerpt from the Senate report quoted above, where the pictorial material clearly exceeds the copyright-protected, nondramatic, literary material in importance.

Holding.—The book described above entitled, "The Armand Hammer Collection: Four Centuries of Masterpieces," published in Japan and bearing the notice of copyright, would not be prohibited entry into the United States by the "manufacturing clause" of the 1976 U.S. Copyright Law (17 U.S.C. 601).

Decisions of the United States Customs Court

United States Customs Court

One Federal Plaza
New York, N.Y. 10007

Chief Judge
Edward D. Re

Judges

Paul P. Rao
Morgan Ford
Scovel Richardson
Frederick Landis
James L. Watson
Herbert N. Maletz
Bernard Newman
Nils A. Boe

Senior Judge
Samuel M. Rosenstein

Clerk
Joesph E. Lombardi

Customs Decisions

(C.D. 4840)

STATE METALS, INC., PLAINTIFF, *v.* UNITED STATES, DEFENDANT

Court No. 76-6-01378

[Plaintiff's motion granted.]

(Dated February 5, 1980)

Shaw & Stedina for the plaintiff.
Alice Daniel, Assistant Attorney General, for the defendant.

ORDER

RE, C.J.: Upon reading and filing of plaintiff's motion, with the consent of the United States, defendant, to dismiss this action, which

action was the subject of a decision and judgment of this court, decided on March 28, 1979, C.D. 4793, which decision and judgment is now the subject of a pending motion for rehearing filed by defendant on April 25, 1979, and in consideration of the fact that plaintiff and defendant have reached agreement as to an acceptable resolution of the issue contested in this action, it is hereby

ORDERED, ADJUDGED AND DECREED that plaintiff's motion to dismiss is granted, and court No. 76-6-01378 is therefore dismissed; and it is further

ORDERED that the decision and judgment of this court in C.D. 4793, decided March 28, 1979, now being moot, is hereby vacated and set aside, *Cf. United States* v. *Munsingwear, Inc.*, 340 U.S. 36 (1950); and it is further

ORDERED that, inasmuch as the action is dismissed and the decision and judgment vacated and set aside, defendant's motion for rehearing in C.D. 4793 is moot.

(C.D. 4841)

COLONNA & CO., INC., PLAINTIFF, *v.* UNITED STATES, DEFENDANT

Marble and travertine blocks

Consolidated Court No. 70/50462

Imported marble and travertine blocks are not advanced beyond their rough state by additional sawing done at the quarry to straighten irregular shapes, eliminate cracks and bumps. The work is done to create a merchantable rough block, has no direct relation to the ultimate stone products, and is not a manufacturing step. The classification in provisions for manufactured stone is held erroneous. The contrary holding in *Domestic Marble & Stone Co.* v. *United States*, 64 Cust. Ct. 360, C.D. 4003 (1970) is criticized.

[Judgment for plaintiff.]

(Decided February 6, 1980)

Lamb & Lerch (*Murray Sklaroff* at the trial and on the brief) for the plaintiff.

Alice Daniel, Assistant Attorney General; *Joseph I. Liebman*, Attorney in Charge, Field Office for Customs Litigation (*Susan C. Cassell* at the trial and on the brief), for the defendant.

WATSON, Judge: This consolidated action challenges the classification of marble and travertine blocks imported from Italy.

The marble block was classified as sawed marble under item 514.57[1] of the Tariff Schedules of the United States (TSUS) and assessed with duty at the rate of 40 cents per cubic foot. The travertine blocks were classified as sawed travertine under item 515.24[2] of the TSUS and assessed with duty at the rate of 14.5 or 12.5 per centum ad valorem, depending on the date of entry.

Plaintiff claims that the marble block is properly classifiable as marble, in block, rough or squared, under item 514.51[3] of the TSUS, dutiable at the rate of 22 cents per cubic foot and further claims that the travertine blocks are properly classifiable as unsawn travertine under item 515.21[4] of the TSUS, dutiable at the rate of 7 or 6 cents per cubic foot, depending on the date of entry.

The record of *Domestic Marble & Stone Co.* v. *United States*, 64 Cust. Ct. 360, C.D. 4003 (1970) was incorporated herein.

The imported stone blocks are removed from the quarry by wire sawing, resulting first in a large stone mass of 100 to 200 tons and then in more manageable rectangular blocks of less than 20 tons. A typical block would be about 10 feet long, 3½ feet high, and 3½ feet wide, and would weigh about 10 tons. At the quarry some additional work is normally done to straighten out irregular shapes, remove bumps and recut blocks to eliminate cracks. In the *Domestic Marble & Stone Co.* case, this additional work was considered to be manufacturing and the court held travertine blocks to be manufactured within the meaning of item 515.24. The defendant argues for the *stare decisis* effect of that holding.

However, the court is presently of the opinion that *stare decisis* should not apply because the decision in the *Domestic Marble* case was erroneous. It is unreasonable to hold that massive blocks of stone, which must be utterly transformed after importation into relatively thin slabs, are subjected to manufacture by steps taken at the quarry which merely place the blocks in a rough, merchantable condition and eliminate the need to ship useless, cracked portions and protuberances. The additional shaping of the rough blocks has no direct relation to the dimensions of the finished product. In this important respect the analogies drawn in the *Domestic Marble* case to

---

[1] Marble, breccia, or onyx, sawed or dressed, over 2 inches thick ..... 40¢ per cubic foot.

[2] Travertine, hewn, sawed, dressed, polished or otherwise manufactured, and suitable for use as monumental, paving, or building stone ..... 14.5% ad val. [1970]
12.5% ad val. [1971]

[3] Marble, breccia, in block, rough or squared only ..... 22¢ per cubic foot.

[4] Travertine, not hewn, not sawed, not dressed, not polished, and not otherwise manufactured ..... 7¢ per cubic foot. [1970]
6¢ per cubic foot. [1971]

the cutting of one end of used print rollers and the trimming of palmyra stalks to approximate ordered lengths were defective. In *David M. Studner* v. *United States*, 62 Cust. Ct. 63, C.D. 3679, 295 F. Supp. 289 (1969), the cutting of one end of used print rollers was directly related to the ultimate use of the objects as articles of interior decoration such as lamp bases, umbrella stands, floor vases, etc. In *Chas. H. Demarest, Inc.* v. *United States*, 44 CCPA 133, C.A.D. 650 (1957), the palmyra stalks were trimmed to approximate ordered lengths, an act which directly contributed to the ensuing production of brooms and brushes. No equivalent trimming to size took place here and there was no measurable relation between what was done at the quarry and the final products.

A far better analogy is offered by cane sticks which were stripped of bark, trimmed of valueless portions, dried or seasoned, denoded (removal of joints between the straight sections), sorted, and, in some instances, quartered—all this prior to importation for use in the manufacture of reeds for musical instruments. Nevertheless they were held to be "in the rough." *Rico Products Co. et al.* v. *United States*, 44 Cust. Ct. 100, C.D. 2159 (1960). *Cf. General Freight Services, Inc., et al.* v. *United States*, 74 Cust. Ct. 87, C.D. 4590 (1975) in which frozen "pearl" onions, from which the roots, tops, and outer skin layers were removed, were held not to be cut, sliced, or otherwise reduced in size. *See also The Hothouse Products Corp. et al.*, 21 CCPA 261, T.D. 46789) (1933) in which endive, from which the grower normally removed 20 percent of the outer leaves, was held to be a vegetable in its natural state. *See also E. Dillingham, Inc., et al.* v. *United States*, 61 Cust. Ct. 33, C.D. 3522 (1968) in which the removal of burrs or slivers of steel from axe head forgings was held not to have advanced them beyond forgings.

If there was any doubt in the incorporated record as to the significance of the additional work done at the quarry, the additional testimony herein made it clear that the imported blocks do not possess perfectly straight surfaces and the surface portions of the blocks are rarely, if ever, used. After importation they are normally sliced away as part of the process by which a rank of gang saws makes parallel cuts to produce slabs from the interior of the block. In retrospect, the rudimentary additional shaping which occurred at the quarry had no direct relation to the final product and was only an eminently reasonable preparation of a bulky natural material for shipment and sale.

It is clear that the sawing done merely to remove stone from the quarry and reduce it to commercial sizes suitable for transportation is not the manufacturing of travertine referred to in item 515.25. The sawing referred to in that provision must be an act of manufacture,

not an act of extraction from the earth or a related preparation for shipment and sale. Nor would it be reasonable to read item 514.57 covering sawed marble as including marble in which sawing has been used only for the same basic quarrying purposes and for the preparation of blocks for shipment, because another provision (item 514.51) already exists for blocks of marble in the rough.

Accordingly, it is the holding of the court that the classification of these marble and travertine blocks in the provisions governing those materials when "sawed" was incorrect. Plaintiff has successfully proved that the proper classification for the marble block is under item 514.51 as marble blocks in the rough and that the proper classification for the travertine blocks is as unmanufactured travertine under item 515.21.

Judgment will enter accordingly.

(C.D. 4842)

TERRA FIRMA SALES CO., PLAINTIFF *v.* UNITED STATES, DEFENDANT

On Plaintiff's Motion and Defendant's Cross-Motion for Summary Judgment

Court No. 75-10-02593

ARTIFICIAL FLOWERS

Flowers made by glueing together parts of natural plants were properly classified as artificial flowers. The use of natural plant materials to create a flower does not result in a natural flower. An artificial flower is a flower whose body was not created by nature.

[Plaintiff's motion denied; defendant's cross-motion granted.]

(Dated February 6, 1980)

Stanley R. Gustafson for the plaintiff.

Alice Daniel, Assistant Attorney General; *Joseph I. Liebman*, Attorney in Charge, Field Office for Customs Litigation (*Susan C. Cassell* on the briefs), for the defendant.

MEMORANDUM OPINION AND ORDER

WATSON, Judge: This action challenges the classification of imported articles having the likeness of flowers. They consist of parts of dried plants which have been glued together to form a flower and then attached to a wrapped wire stem. They were classified as artificial

flowers under item 748.21 [1] of the Tariff Schedules of the United States (TSUS) and assessed with duty at the rate of 42.5 per centum ad valorem. Plaintiff claims that they are either free of duty as dried or bleached natural plants under item 748.30 [2] of the TSUS or dutiable at the rate of 5 per centum ad valorem under item 748.25 [3] of the TSUS as cut natural flowers.

Plaintiff argues in effect that artificial flowers must be composed of artificial substances. However, in the opinion of the court, the artificiality of artificial flowers resides in the manner of their creation and not in the synthetic nature of their components. An artificial flower is a flower whose body was not created by nature, and it matters not whether it is made from bits and pieces of natural plants. This court has previously held that the insertion of an artificial stem into a natural flower does not create an artificial flower. *Hub Floral Corp.* v. *United States*, 77 Cust. Ct. 21, C.D. 4669, 422 F. Supp. 283 (1976). However, in that case the essential part of the natural flower remained inviolate. Here, there are no complete flowers of natural origin but rather objects which arose from artificial construction.

There is no ambiguity in the term artificial flowers and no reason to refer to legislative history. In any event, plaintiff's references [4] reveal only that the fabrication of artificial flowers from parts of natural plants was not one of the principle concerns of the legislators. There is no indication that such products were not to be considered artificial.

For the above reasons, the correctness of the classification is apparent and it is clear that plaintiff's motion for summary judgment must be denied at the same time as defendant's cross-motion must be granted. It is therefore

ORDERED, that plaintiff's motion for summary judgment be, and hereby is, denied, and it is further

ORDERED, that defendant's cross-motion for summary judgment be, and hereby is, granted, and it is further

ORDERED, ADJUDGED AND DECREED, that the liquidated assessment of duties be, and hereby is, affirmed, that plaintiff's claims be, and hereby are, overruled, and that this action be dismissed.

---

[1] Artificial flowers, trees, foliage, fruits, vegetables, grasses, or grains, parts of the foregoing, and articles made of the foregoing (except articles provided for in item 748.15 or 748.40 of this subpart):

* * * * * * *

Other ..... 42.5% ad val.

[2] Grains, grasses, lichens, mosses, and other natural plants, all the foregoing, and parts thereof, dried, bleached, colored, or chemically treated, suitable for bouquets, wreaths, or other ornamental use:

Dried or bleached ..... Free

[3] Cut natural flowers, dried, bleached, colored, or chemically treated ..... 5% ad val.

[4] "Summaries of Tariff Information" (1948), vol. 15, part 2, pp. 76, 79; "Summary of Tariff Information" (1929), schedule 14, p. 1976.

313-579 O - 79 - 2

Decisions of the United States Customs Court

Abstracts

Abstracted Protest Decisions

DEPARTMENT OF THE TREASURY, *February 11, 1980.*

The following abstracts of decisions of the United States Customs Court at New York are published for the information and guidance of officers of the customs and others concerned. Although the decisions are not of sufficient general interest to print in full, the summary herein given will be of assistance to customs officials in easily locating cases and tracing important facts.

ROBERT E. CHASEN,
Commissioner of Customs.

DECISION NUMBER	JUDGE & DATE OF DECISION	PLAINTIFF	COURT NO.	ASSESSED	HELD	BASIS	PORT OF ENTRY AND MERCHANDISE
				Par. or Item No. and Rate	Par. or Item No. and Rate		
P80/24	Rao, J. February 8, 1980	Phono Sonic Radio Corp.	78-8-01461	Item 678.50 5%	Item 678.50 Free of duty under GSP, by virtue of Ex. Order No. 11906 of 2/27/76	Agreed statement of facts	New York AM/FM/MPX with 8-track tape player chassis; product of eligible beneficiary country

Decisions of the United States Customs Court

Abstracts

Abstracted Reappraisement Decisions

DECISION NUMBER	JUDGE & DATE OF DECISION	PLAINTIFF	COURT NO.	BASIS OF VALUATION	HELD VALUE	BASIS	PORT OF ENTRY AND MERCHANDISE
R80/6	Rao, J. February 8, 1980	YKK Zipper Co., Inc., Yoshida International, Inc.	77-10-04066	United States value	Equal to invoiced unit prices, net, packed	Agreed statement of facts	New York Zippers and/or zipper parts classified under item 745.70, 745.72 or 745.74
R80/7	Rao, J. February 8, 1980	Yoshida International, Inc.	76-5-01320	Constructed value	Equal to invoiced unit prices plus 8.5%, net, packed	Agreed statement of facts	New York Zippers and/or zipper parts classified under item 745.70, 745.72 or 745.74
R80/8	Ford, J. February 8, 1980	Mitsui & Co.	R68/17314	United States value	F.o.b. unit invoice prices plus 50%	Agreed statement of facts	New York Electron receiving tubes

International Trade Commission Notices

Investigations by the U.S. International Trade Commission

DEPARTMENT OF THE TREASURY

The appended notices relating to investigations by the U.S. International Trade Commission are published for the information of Customs officers and others concerned.

R. E. CHASEN,
Commissioner of Customs.

[19 CFR 207.40]

Investigation Nos. 701–TA–4 (Final) and 701–TA–5 (Final)

TAPS, COCKS, VALVES, AND SIMILAR DEVICES, AND PARTS THEREOF FROM ITALY AND JAPAN

Notice of Termination of Investigations and Cancellation of Hearing

AGENCY: U.S. International Trade Commission.

ACTION: Termination of the two captioned investigations under section 704 of the Tariff Act of 1930.

EFFECTIVE DATE: February 12, 1980.

FOR FURTHER INFORMATION CONTACT: Mr. John MacHatton, Office of Investigations; telephone No. 202–523–0439.

SUPPLEMENTARY INFORMATION: By notice issued January 10, 1980, and published in the Federal Register (45 F.R. 3400 (January 17, 1980)), the Commission instituted the subject investigations to determine whether with respect to the articles involved an industry in the United States is materially injured, or is threatened with material injury, or the establishment of an industry in the United States is materially retarded, by reason of the subsidized imported merchandise. A public hearing was scheduled, on a tentative basis,

to be held at the International Trade Commission Building, on April 2, 1980.

On February 4, 1980, the Commission received a letter from counsel for the original petitioner for the countervailing duty investigations. The text of that letter is reproduced below.

JANUARY 31, 1980.

Mrs. CATHERINE BEDELL,
Chairman, U.S. International Trade Commission,
Washington, D.C.

DEAR MADAM CHAIRMAN: I am writing to inform you on behalf of the Valve Manufacturers Association that the Valve Manufacturers, petitioners in a countervailing duty case against Japan and Italy, wish to withdraw their petition. I request, as a result, that the International Trade Commission accept this withdrawal and notify all companies who have received questionnaires of the withdrawal. Thank you.

Sincerely,

DAVID A. HARTQUIST,
Counsel, Valve Manufacturers Association.

The legal authority for a request to withdraw a petition for a countervailing duty investigation and the legal authority for the Commission to terminate an investigation in response to a request to withdraw the petition are found in section 704 of the Tariff Act of 1930. The only restriction on the Commission's authority to terminate is that all parties to the investigation must be notified of the termination. In the instant case only the petitioners have appeared as parties before the Commission. For these reasons the Commission is granting the request and terminating these investigations. In addition to notifying interested persons who have not appeared before the agency, the Commission is notifying the Department of Commerce of its action in these cases.

By order of the Commission.

Issued: February 13, 1980.

KENNETH R. MASON,
Secretary.

[332-73]

Notice of Release for Public Comment of Provisionally Adopted Chapters of the Harmonized Commodity Description and Coding System

AGENCY: U.S. International Trade Commission.

ACTION: Release for public comment, pursuant to Commission investigation No. 332-73, under the authority of section 332(g) of

the Tariff Act of 1930, as amended, of drafts of the following chapters of the Harmonized Commodity Description and Coding System as provisionally adopted by the Harmonized System Committee and the Nomenclature Committee of the Customs Cooperation Council.

Chapter 1: Live animals; animal products.
Chapter 2: Meat and edible meat offal.
Chapter 3: Fish, crustaceans, and molluscs.
Chapter 5: Products of animal origin, not elsewhere specified or included.
Chapter 6: Live trees and other plants; bulbs, roots, and the like; cut flowers and ornamental foliage.
Chapter 7: Edible vegetables and certain roots and tubers.
Chapter 8: Edible fruit and nuts; peel of melons or citrus fruits.
Chapter 9: Coffee, tea, maté, and spices.
Chapter 10: Cereals.
Chapter 11: Products of the milling industry; malt and starches; gluten; inulin.
Chapter 13: Lacs; gums, resins, and other vegetables saps and extracts.
Chapter 14: Vegetable plaiting materials; vegetable products not elsewhere specified or included.
Chapter 15: Animal and vegetable fats and oils and their cleavage products; prepared edible fats; animal and vegetable waxes.
Chapter 16: Preparations of meat, of fish, of crustaceans or molluscs.
Chapter 17: Sugars and sugar confectionery.
Chapter 20: Preparations of vegetables, fruit, nuts, or other parts of plants.
Chapter 24: Tobacco and manufactured tobacco substitutes.
Chapter 25: Salt; sulphur; earth and stone; plastering materials; lime and cement.
Chapter 26: Ores, slag, and ash.
Chapter 28: Inorganic chemicals; organic and inorganic compounds of precious metals, of rare Earth metals, of radioactive elements, and of isotopes.
Chapter 29: Organic chemicals.
Chapter 30: Pharmaceutical products.
Chapter 33: Essential oils and resinoids; perfumery, cosmetics, and toilet preparations.
Chapter 34: Soap, organic, surface-active agents, washing preparations, lubricating preparations, artificial waxes, prepared waxes, polishing and scouring preparations, candles and similar articles, modelling pastes, and "dental waxes."

Chapter 41: Raw hides and skins (other than furskins) and leather.
Chapter 43: Furskins and artificial fur; manufactures thereof.
Chapter 44: Wood and articles of wood; wood charcoal.
Chapter 45: Cork and articles of cork.
Chapter 46: Manufactures of straw, of esparto, and of other plaiting materials; basketware and wickerwork.
Chapter 47: Pulp of wood or of other fibrous cellulosic material; waste and scrap of paper or paperboard.
Chaper 48: Paper and paperboard; articles of paper pulp, of paper, or of paperboard.
Chapter 49: Printed books, newspapers, pictures, and other products of the printing industry; manuscripts, typescripts, and plans.
Chapter 64: Footwear, gaiters, and the like; parts of such articles.
Chapter 65: Headgear and parts thereof.
Chapter 66: Umbrellas, sun umbrellas, walking sticks, seat sticks, whips, riding crops, and parts thereof.
Chapter 67: Prepared feathers and down and articles made of feathers or of down; artificial flowers; articles of human hair.
Chapter 68: Articles of stone, of plaster, of cement, of asbestos, of mica, and of similar materials.
Chapter 69: Ceramic products.
Chapter 70: Glass and glassware.
Chapter 71: Natural or cultured pearls, precious or semiprecious stones, precious metals, metals clad with precious metals, and articles thereof; imitation jewelery; coin.
Chapter 74: Copper and articles thereof.
Chapter 75: Nickel and articles thereof.
Chapter 76: Aluminum and articles thereof.
Chapter 78: Lead and articles thereof.
Chapter 79: Zinc and articles thereof.
Chapter 80: Tin and articles thereof.
Chapter 81: Other base metals; cermets; articles thereof.
Chapter 82: Tools, implements, cutlery, spoons, and forks, of base metal; parts thereof.

WRITTEN SUBMISSIONS: Parties wishing to submit written comments should do so by July 1, 1980.

HEARING: Parties desiring the Commission to hold a hearing on these draft chapters of the Harmonized Code should contact the Secretary of the Commission by April 1, 1980, and show good cause for holding a hearing.

COPIES OF DOCUMENTS: Copies of the chapters which are the subject of this notice are available for public inspection at the offices of the Commission, 701 E Street NW., Washington, D.C. 20436, or at 6 World Trade Center, New York, N.Y. 10048. The Commission will also send copies to interested parties upon request.

FOR FURTHER INFORMATION CONTACT: Eugene A. Rosengarden, Director, Office of Nomenclature, Valuation and Related Activities, U.S. International Trade Commission, 701 E Street NW., Washington, D.C. 20436; telephone 202-523-0370.

SUPPLEMENTARY INFORMATION: The purpose of this notice is to obtain the comments and views of interested parties with respect to the above-mentioned provisionally adopted chapters of the Harmonized Commodity Description and Coding System.

This notice is being issued pursuant to Commission investigation No. 332-73, instituted on January 31, 1975 (40 F.R. 6329), under section 332 (g) of the Tariff Act of 1930. The investigation was initiated in accordance with section 608(c) of the Trade Act of 1974, which provides, in part, that the Commission shall institute an investigation which would provide the basis for—

> (2) full and immediate participation by the U.S. International Trade Commission in the U.S. contribution to technical work of the Harmonized Systems [sic] Committee under the Customs Cooperation Council to assure the recognition of the needs of the U.S. business community in the development of a Harmonized Code reflecting sound principles of commodity identification and specification and modern producing methods and trading practices . . . .

The Harmonized Commodity Description and Coding System (Harmonized Code) is being developed by the Customs Cooperation Council (CCC), an 80-member international organization with headquarters in Brussels, as an international commodity classification system which will be adaptable for modernized customs tariff nomenclature purposes and for recording, handling, and reporting of transactions in international trade. The Harmonized Code will be based on, and in many respects will be an extension of, the Customs Cooperation Council Nomenclature (CCCN), formerly known as the Brussels Tariff Nomenclature (BTN).

Currently, the technical team working under auspices of the CCC prepares drafts of the various chapters of the Harmonized Code for consideration by the Harmonized System Committee, which was established in order to develop the code. These drafts are forwarded to the members and observers of the Committee for their review and submission of written comments. The Committee meets three times a year

to consider these drafts and the written comments and presentations of the various delegations. The review of a particular chapter or group of chapters may extend to more than one meeting.

In its public notices of May 4, 1976 (41 F.R. 18716 of May 6, 1976), August 9, 1976 (41 F.R. 34370 of August 13, 1976), December 20, 1976 (41 F.R. 55948 of December 23, 1976), September 1, 1977 (42 F.R. 44852 of September 7, 1977), February 7, 1978 (43 F.R. 5902 of February 10, 1978), October 16, 1978 (43 F.R. 43723 of October 19, 1978), February 14, 1979 (44 F.R. 10435 of February 20, 1979), May 18, 1979 (44 F.R. 29740 of May 22, 1979), and September 5, 1979 (44 F.R. 53112 of September 12, 1979), the Commission identified those chapters which have been considered thus far by the Harmonized System Committee, and the chapters for which a technical team draft has been released.

Following its deliberations on the draft chapters, the Harmonized System Committee forwards recommended texts for the chapters to the Nomenclature Committee. The Nomenclature Committee, which supervises the operations of the Convention on Nomenclature for the Classification of Goods in Customs Tariffs and is responsible for insuring international uniformity in the interpretation and application of the CCCN, reviews the recommended texts for the Harmonized System and returns the draft chapters which it has approved to the Harmonized System Committee. The draft chapters which have thusly been provisionally approved by both committees are then held in abeyance pending final revision session. It is anticipated that the Harmonized System Committee will begin final revision sessions early in 1981.

The draft chapters released for public comment today have been provisionally adopted by the Harmonized System Committee and the Nomenclature Committee according to the above described procedure. As further chapters are adopted the Commission will issue future notices requesting public comment.

In 1971, the Department of the Treasury established an Interagency Advisory Committee on Customs Cooperation Council Matters in order to provide a basis for interested Federal agencies to participate with respect to CCC matters. In order to establish and develop U.S. programs and policies with respect to the Harmonized Code, the interagency committee has instituted procedures which take into account the provisions of section 608(c) of the Trade Act of 1974, which call for the Commission to contribute to the U.S. technical input to the Harmonized System Committee. Under these procedures the Commission is preparing technical comments and proposals on the various chapters of the Harmonized Code for consideration by the interagency

committee in the determination of U.S. positions with respect to the Harmonized Code. In making proposals, the Commission is seeking and taking into consideration the views of trade and industry and other interested parties and of interested Government agencies.

By order of the Commission.

Issued: February 8, 1980.

KENNETH R. MASON,
Secretary.

Index

U.S. Customs Service

Treasury decisions:

	T.D. No.
Bonds, Consolidated Aircraft	80-71
Cotton, wool and manmade fiber textile products:	
Macau	80-73
Indonesia	80-74
Customs delegation order No. 60	80-75
Foreign currencies: Daily certified rates; February 4-8, 1980	80-69
Manmade fiber textile products—Haiti	80-72
Notice of recordation of trade name—Colt Communications	80-70

Customs Service decisions:

Bonds: Use of single entry bond to cover merchandise subject to dumping finding	80-16
Carrier control:	
Applicability of coastwise laws to time chartered vessel	80-17
Entry of vessels arriving from high seas	80-26
Classification: Ski hats	80-22
Collection and refunds: Special tonnage taxes and light money	80-25
Country-of-origin marking:	
Watchcases assembled abroad from American casebacks and foreign-made bezels	80-23
Disposable container packaging	80-29
Copyright infringement: Book with art reproductions and textual commentary	80-30
Entry:	
Whether consumption and warehouse entry summaries may be filed for different portions of same shipment of merchandise	80-28
Time limit for submitting documentary evidence in order to support reliquidation claim under 19 U.S.C. 1520(c)(1)	80-19
Generalized system of preferences: Substantial transformation of rattan	80-27
Marking:	
Dungarees labeled with trade name containing name of locality other than country of origin	80-20
Automotive lamps assembled abroad from American and foreign components	80-21
Resident exemption: Time limit for free entry of household effects following nonresident's last arrival	80-18
Temporary importation under bond: Whether drugs imported for testing are considered destroyed because lack of FDA approval makes drugs unmarketable	80-24

Customs Court

Artificial flowers; summary judgment, cross-motions for, C.D. 4842
Blocks, marble and travertine; marble blocks in the rough; unmanufactured travertine, C.D. 4841
Consent motion; dismissal of action, C.D. 4840
Construction:
    Tariff Schedules of the United States:
        Item 514.51, C.D. 4841
        Item 514.57, C.D. 4841
        Item 515.21, C.D. 4841
        Item 515.24, C.D. 4841
        Item 748.21, C.D. 4842
        Item 748.25, C.D. 4842
        Item 748.30, C.D. 4842
Cross-motions for summary judgment, C.D. 4842
Cut natural flowers, C.D. 4842
Decision and judgment vacated, C.D. 4840
Definition; artificial flower, C.D. 4842
Dismissal of action; consent motion, C.D. 4840
Dried or bleached natural plants, C.D. 4842
Flowers:
    Artificial, C.D. 4842
    Cut natural, C.D. 4842
Legislative history:
    Summaries of Tariff Information, 1948, vol. 15, part 2, pp. 76, 79, C.D. 4842
    Summary of Tariff Information, 1929, schedule 14, p. 1976, C.D. 4842
Marble:
    Block, C.D. 4841
    Blocks in the rough; unmanufactured travertine; blocks, marble and travertine, C.D. 4841
    In block, rough or squared, C.D. 4841
    Sawed, C.D. 4841
Motion:
    For rehearing moot, C.D. 4840
    For summary judgment, C.D. 4842
    To dismiss action granted, C.D. 4840
Natural:
    Flowers, cut, C.D. 4842
    Plants, dried or bleached, C.D. 4842
Plants, natural (dried or bleached), C.D. 4842
Rehearing, motion for, C.D. 4840
Sawed:
    Marble, C.D. 4841
    Travertine, C.D. 4841
Summary judgment, cross-motions for; artificial flowers, C.D. 4842
Travertine:
    Blocks; unmanufactured, C.D. 4841
    Sawed, C.D. 4841
    Unsawn, C.D. 4841
Unmanufactured; travertine blocks, C.D. 4841
Unsawn travertine, C.D. 4841
Words and phrases; artificial flower, C.D. 4842

MAR 1 4 1980
313-580
350
Item 950-D T1.11/3:14/11
1/contin

Customs Bulletin

Regulations, Rulings, Decisions, and Notices concerning Customs and related matters

and Decisions

of the United States Court of Customs and Patent Appeals and the United States Customs Court

Vol. 14 | MARCH 12, 1980 | No. 11

9247

This issue contains

T.D. 80–76
C.S.D. 80–31 thru 80–50
Appeals No. 79–15
C.D. 4843
Protest abstracts P80/25 thru P80/29
Reap. abstracts R80/9 thru R80/17
International Trade Commission Notices

THE DEPARTMENT OF THE TREASURY
U.S. Customs Service

A.T.

NOTICE

The abstracts, rulings, and notices which are issued weekly by the U.S. Customs Service are subject to correction for typographical or other printing errors. Users may notify the U.S. Customs Service, Logistics Management Division, Washington, D.C. 20229, of any such errors in order that corrections may be made before the bound volumes are published.

For sale by the Superintendent of Documents, U.S. Government Printing Office, Washington, D.C. 20402. Price: $1.30 (single copy domestic); $1.65 (single copy foreign). Subscription price: $65.00 a year domestic; $81.25 a year foreign.

U.S. Customs Service

Treasury Decisions

(T.D. 80–76)

Bonds

Approval and discontinuance of bonds on Customs form 7587 for the control of instruments of international traffic of a kind specified in section 10.41a of the Customs Regulations

Bonds on Customs form 7587 for the control of instruments of international traffic of a kind specified in section 10.41a of the Customs Regulations have been approved or discontinued as shown below. The symbol D indicates that the bond previously outstanding has been discontinued on the month, day, and year represented by the figures which follow. PB refers to a previous bond, dated as represented by the figures in parentheses immediately following which has been discontinued. If the previous bond was in the name of a different company or if the surety was different, the information is shown in a footnote at the end of the list.

Dated: February 20, 1980.

Name of principal and surety	Date of bond	Date of approval	Filed with district director/area director/amount
J. H. Baxter & Co., Inc., 120 Montgomery St., San Francisco, CA; St. Paul Fire & Marine Ins. Co. D 1/7/80	Mar. 19, 1965	Mar. 19, 1965	Seattle, WA; $10,000
Boxline Shipping Co., Ltd., 17 Battery Place, New York, NY; Old Republic Ins. Co.	Jan. 11, 1980	Jan. 11, 1980	New York Seaport; $10,000
Cadbury Schweppes U.S.A., Inc., and its w/o/s Schweppes USA Ltd., Jefferson Bottling Co., Inc. and Peter Paul Cadbury Inc., 1200 High Ridge Rd., Stamford, CT; Old Republic Ins. Co.	Jan. 23, 1980	Jan. 28, 1980	New York Seaport; $10,000
Cargo-Ships & Containers Agency Ltd., 618 Second Ave, Seattle, WA; Washington International Ins. Co. D 12/11/79	Jan. 4, 1978	Jan. 4, 1978	Seattle, WA; $10,000

Footnotes at end of table.

Name of principal and surety	Date of bond	Date of approval	Filed with district director/area director/amount
Edward R. Comber, Jr., P.O. Box 217, Jackman, ME; Hartford Accident & Indemnity Co. D 12/31/79	Aug. 7, 1964	Aug. 14, 1964	Portland, ME; $10,000
Fritz Maritime Agencies, 142 Sansome St., Suite 400, San Francisco. CA; Old Republic Insurance Co. D 1/10/80	Jan. 10, 1979	Jan. 10, 1979	San Francisco, CA; $10,000
The Goodyear Tire and Rubber Co., (An OH Corp.), 1144 East Market St., Akron, OH; Federal Ins. Co.	Aug. 18, 1976	Feb. 11, 1977	Norfolk, VA; $10,000
House of Windsor, Inc., 100 W. Putnam Ave., Greenwich, CT; Federal Insurance Co.	Nov. 20, 1979	Nov. 27, 1979	New York Seaport; $10,000
Long Manfacturing N.C., Inc., 1907 N. Main St., Tarboro, NC; Investors Insurance Co. of America	Dec. 12, 1979	Dec. 18, 1979	Wilmington, NC; $10,000
Luigi Serra Inc., 21 West St., New York, NY; American Motorists Insurance Co.	Dec. 21, 1979	Dec. 21, 1979	New York Seaport; $10,000
E. P. Melanson Ltd., Cocagne, New Brunswick, Canada; Maine Bonding & Casualty Co. D 1/31/80	Nov. 22, 1967	Nov. 22, 1967	Portland, ME; $10,000
National Can Puerto Rico, Inc., Box 185, Catano, PR; Puerto Rican American Insurance Co.	Nov. 14, 1979	Nov. 27, 1979	San Juan, PR; $10,000
Puerto Rican Cement Co., Chase Manhattan Bldg., Hato Rey, PR; New Hampshire Insurance Co. (PB 11/21/78) D 10/30/79 [1]	Oct. 31, 1979	Oct. 31, 1979	San Juan, PR; $10,000
Refrigeration Equipment Co., Inc., 1606 Carondelet St., New Orleans, LA; St. Paul Fire & Marine Insurance Co.	Dec. 14, 1979	Dec. 19, 1979	New Orleans, LA; $10,000
Rhone-Poulenc Inc., 125 Black Horse Lane, Branswick, NJ; Old Republic Insurance Co. (PB 3/1/78) D 11/27/79 [2]	Nov. 27, 1979	Nov. 28, 1979	New York Seaport; $20,000
Roberts Tilston Group Inc., and its w/o/s Roberts Steamship Agency Inc. and Tilston Roberts Corp., Inc., 17 Battery Place, New York, NY; American Motorists Insurance Co.	Dec. 31, 1979	Dec. 31, 1979	New York Seaport; $10,000
Rothesay Paper Corp., Brunswick House, Saint John, New Brunswick, Canada; Maine Bonding & Casalty Co. D 1/31/80	Oct. 10, 1972	Mar. 20, 1973	Portland, ME; $10,000
Sea Islands Transport, Inc., (A U.S. Virgin Islands Corp.), P.O. Box 7667, St. Thomas, Virgin Islands; U.S. Fidelity and Guaranty Co. D 11/9/79	Jan. 1, 1979	Feb. 7, 1979	San Juan, PR; $10,000
Searle Medical Products USA Inc., and its Div. Matheson Gas, 932 Patterson Plank Rd., E. Rutherford, NJ; Old Republic Insurance Co.	Jan. 15, 1980	Jan. 14, 1980	New York Seaport; $15,000

Footnotes at end of table.

Name of principal and surety	Date of bond	Date of approval	Filed with district director/area director/amount
Shinko Bokei Co., Ltd., 3-14 Udagawa-cho, Shibuya-ku, Tokyo, Japan; American Motorists Insurance Co.	Jan. 14, 1980	Jan. 14, 1980	New York Seaport; $10,000
Source Production & Equipment Co., Inc., 625 Oxley St., Kenner, LA; St. Paul Fire & Marine Ins. Co.	Jan. 23, 1980	Jan. 28, 1980	New Orleans, LA; $10,000
Timex Corp., Waterbury, CT; Federal Ins. Co.	Nov. 2, 1979	Dec. 17, 1979	Boston, MA; $10,000
G. P. Toomey & Associates Inc., 1201 Corbin St., Elizabeth, NJ: American Motorists Insurance Co. D 2/4/80	Dec. 18, 1978	Dec. 19, 1978	New York Seaport; $10,000
Trafpak U.S.A. Inc., 2000 West Loop South, Suite 1800, Houston, TX; Old Republic Ins. Co.	Jan. 23, 1980	Jan. 28, 1980	New York Seaport; $10,000
Trans Asia Marine Corp., 60 Broad St., New York, NY; Federal Ins. Co.	Dec. 21, 1979	Dec. 21, 1979	New York Seaport; $10,000
Transmarine Navigation Corp., 1000 Wilshire Blvd., Los Angeles, CA; St. Paul Fire & Marine Ins. Co. D 11/26/79	June 9, 1977	June 10, 1977	Los Angeles, CA; $50,000

[1] Surety in Puerto Rican American Insurance Co.
[2] Principal is Rhodia, Inc. Surety is Peerless Ins. Co.

BON-3-10

DONALD W. LEWIS,
Director,
Office of Regulations and Rulings.

U.S. Customs Service

Customs Service Decisions

The following are decisions made by the U.S. Customs Service where the issues involved are of sufficient interest or importance to warrant publication in the CUSTOMS BULLETIN.

Dated: February 22, 1948.

SALVATORE E. CARAMAGNO
(For the Director, Office of
Regulations and Rulings).

(C.S.D. 80-31)

Marking: Partially Obscured Country-of-Origin Marking Label on Clock Movement

Date: July 10, 1979
File: MAR 2-05 R:E:E
710611 MC

This ruling concerns the sufficiency of marking a clock movement with an encapsulated label.

Issue.—Whether a partially obscured marking in which all of the required information is ultimately legible is "conspicuous" enough to comply with clock movement marking requirements.

Whether a label, permanently encapuslated by transparent colloid, complies with marking requirements for clock movements.

Facts.—The submitted clock movement is a 17/16-inch long by 3/8-inch wide printed circuit board. A silver label, almost as wide as the board itself, contains the words "unadjusted, no jewels, made in Taiwan" and the name of the manufacturer. The label and the board have been covered with transparent colloid, permanently, encapsulating the movement and marking label. A component, attached above the label partially obscures the words, "unadjusted, no jewels" but they are not illegible.

Law and analysis.—Schedule 7, part 2, subpart E, headnote 4, TSUS, requires that movements be "conspicuously * * * marked." The

presence of the label itself on the face of the movement is conspicuous. Although the entire label is not easily readable at first glance, the words "Made in Taiwan" and the presence of other words are obvious. The ultimate purchaser, the watchmaker, should not encounter difficulty determining what is printed. All of the required information that the watchmaker would expect to see appears on the label. The nature of the movement is such that some obstruction is inevitable; the method employed allows the marking to be legible.

Schedule 7, part 2, subpart E, headnote 4, TSUS, also requires that movements be "indelibly marked by cutting, die-sinking, engraving, or stamping." While another marking method was employed, the encapsulated label is as indelible as possible. Cutting, die-sinking, engraving, or stamping of the movement would not be as effective as the process achieved here. The purpose of a permanent, legible marking has been satisfied.

Holding.—A partially obscured but legible marking sufficiently complies with marking requirements when some obstruction is unavoidable due to the nature of the item.

An indelible marking of a clock movement by means of an encapsulated label sufficiently complies with the marking requirements.

(C.S.D. 80-32)

Marking: Conspicuous Country-of-Origin Marking of Household Paring Knife

Date: July 10, 1979
File: MAR 2-05 R:E:E
710683 MC

This ruling concerns the contry-of-origin marking on the unexposed side of a knife blade.

Issue.—Whether knives are conspicuously marked as to country of origin when, in their retail containers (sheaths), the marked side of the blade is covered while the unmarked side can be seen through the transparant plastic panel of the sheath.

Facts.—The knife in question is a household paring knife with a wood-like handle. The blade is covered by a plastic sheath which on one side consists of clear plastic, while the other is a solid brown color through which the blade cannot be seen. On the visible side of the blade appear the company name, the model number, the words "super stainless steel" and the figure of a soldier's head. The word "Japan" is die sunk on the side of the blade which cannot be seen through the sheath.

Law and analysis.—Section 304 of the Tariff Act of 1930, as amended (19 U.S.C. 1304), requires that all articles imported into the United States be legibly, conspicuously, and permanently marked with the English name of the country of origin. Knives, in particular, are required by section 134.43 of the Customs Regulations to be individually "marked legibly and conspicuously by die stamping, cast-in-the-mold lettering, etching (acid or electrolytic), engraving, or by means of metal plates."

The submitted knife is legibly and permanently marked with the country of origin by die stamping. Only by removing the sheath does the marking become visible. But once the sheath is removed for examination of the blade, the marking is conspicuous.

We are of the opinion that the marking method employed sufficiently complies with the requirements of section 134.43. The ultimate purchaser of the knife would normally remove the blade from the sheath to examine it for sharpness or quality. Upon casual examination of the knife, the word "Japan" is obvious.

The presence of the sheath may be construed as a possible attempt to conceal the country-of-origin marking. However, the plastic does serve a useful purpose as it protects the handler of the knife from the blade; the use of colored plastic on one side insures that the sheath is visible. Intent of the manufacturer is irrelevant anyway as we believe that the ultimate purchaser would uncover the blade and see the marking prior to purchase.

Holding.—Marking a knife with the country of origin on an unexposed side of the blade complies with section 134.43, where the covering sheath would normally be removed prior to purchase.

(C.S.D. 80-33)

Carrier Control: Repair Parts For Containers; Coastwise Laws; 46 U.S.C. 883

Date: July 11, 1979
File: VES-3-17-R:CD:C
104016 JL

This ruling concerns the carriage of repair parts for containers and chassis by foreign-flag vessels between U.S. ports.

Issue.—Whether repair parts for chassis and containers fall within the term "equipment for use with cargo vans, lift vans, or shipping tanks" in the sixth proviso of 46 U.S.C. 883.

Facts.—A British steamship company desires to transport repair parts, such as tires and panels, for containers and chassis used in

international trade in its ships between U.S. ports. It is stated that all of the repair parts proposed to be shipped will be used specifically for the repair of containers used in international traffic.

Law and analysis.—The sixth proviso to 46 U.S.C. 883 provides in relevant part as follows:

> *Provided further*, that upon such terms and conditions as the Secretary of the Treasury by regulation may prescribe, and, if the transporting vessel is of foreign registry, * * * this section shall not apply to the transportation by vessels of the United States not qualified to engage in the coastwise trade, or by vessels of foreign registry, of (a) empty cargo vans, empty lift vans, and empty shipping tanks, (b) equipment for use with cargo vans, lift vans, or shipping tanks * * *.

The overrriding consideration in the interpretation of all statutes has been to so interpret them as to carry out their legislative intent. *United States* v. *Oregon*, etc., 164 U.S. 526, 539; *Hawaii* v. *Nankichi*, 190 U.S. 197, 213; *United States* v. *Katz*, 271 U.S. 354.

The Treasury Department's comments on the bill which became Public Law 90–474 and, among other things, added clauses (b) through (d) to the proviso, said in part:

> The Department interprets the words "equipment" in line 4, page 2, of the bill to mean equipment designed for use with cargo vans, lift vans, or shipping tanks, including but not limited to running gear (for example, single axle and tandem bogies , adaptor frames, and chassis), and understands the intent of the bill to be that such equipment may be transported coastwise by a non-entitled vessel without regard to whether it is affixed to or accompanies the vans or tanks.

See 2 U.S. Cong. & Admin. News 68, page 3187.

In considering the statute, 46 U.S.C. 883, we note that it is a protective statute and therefore should be construed strictly in favor of the interest to be protected. Further, we consider the statute to be clear and unambiguous and observe that "repair parts" are nowhere provided for therein. Also, the Senate report to S. 1485 stated in the background portion that:

> The Bureau of Customs has held that the language of Public Law 89–194 insofar as it relates to "empty cargo vans, empty lift vans, and empty shipping tanks" is not sufficiently broad to embrace running gear related to such containers unless such gear is, in fact, affixed thereto * * *.

Based on the above, we interpret the sixth proviso of 46 U.S.C. 883 as not encompassing the coastwise movement of repair parts of containers, cargo vans, lift vans, shipping tanks, etc., but instead consider that "equipment" as it is used in said proviso relates to accessories of said articles.

313-580 O - 80 - 2

Holding.—Repair parts of containers may not be transported by noncoastwise qualified vessels between U.S. ports without incurring the penalties provided for in 46 U.S.C. 883.

Effect on other holdings.—Headquarters decision 103639 amplified.

(C.S.D. 80-34)

Generalized System of Preferences: Substantial Transformation of Constituent Chemical Materials; 35 Percent Value-Added Requirement

Date: July 12, 1979
File: R:CV:S
055716/055717 JLV

This ruling concerns the processing of NPR-2 into Naproxen which results in an intermediate product which is a material produced in a beneficiary developing country (BDC) for purposes of the Generalized system of preferences (GSP).

Issue.—Does the processing of NPR-2 into the intermediate potassium salt of Naproxen result in a new and different article of commerce which, when processed to make Naproxen, is a constituent material produced in the Bahamas within the meaning of section 503(b)(2)(A)(i) of the Trade Act of 1974 and section 10.177(a)(2) of the Customs Regulations (19 CFR 10.177(a)(2))? Is the mixing of Naproxen with a starch excipient a substantial transformation resulting in a new and different article of commerce for purposes of the GSP?

Facts.—NPR-2 is produced in the United States by resolving the isomeric mixture of dextrorotatory and levorotatory Naproxen (d,1—acid) with cinchonidine. The NPR-2 (cinchonidine menapropionate) is a complex of the active d-isomer and the resolving agent. This product is then exported to the Bahamas for processing into Naproxen ((+)-6-methoxy-α-methyl-2-naphthaleneacetic acid).

The NPR-2 is reacted in the Bahamas with potassium hydroxide to form the potassium salt of Naproxen. In this chemical reaction the resolving agent, cinchonidine, is recovered from the NPR-2 complex and is returned to the United States for recycling. The potassium salt of Naproxen is then reacted with hydrochloric acid to yield crude Naproxen and potassium chloride. Isolation of the crude Naproxen from the solution is achieved by precipitating with water and centrifugation.

The crude Naproxen, known as a "wet-cake," is then dissolved in acetone and treated with activated carbon to remove discoloration. After the carbon is filtered off, the acetone volume is reduced by

distillation. By adding water to the solution the pure Naproxen is precipitated. It is then dried and milled to a fine white powder.

It is proposed to export either the Naproxen in the pure form or to further process the Naproxen by mixing with a starch excipient and then to export the Naproxen-starch mixture. Mixing with starch is one of several stages during the tableting process. Final mixing with additional excipients and tableting would take place in the United States.

Naproxen is not an article eligbible for duty-free treatment under the GSP. However, this ruling is requested for the purpose of future action in which GSP eligibility will be requested for the product.

Law and analysis.—In order to qualify for duty-free entry under the GSP, an eligible article must satisfy certain requirements. One of these is the 35 percent value-added requirement established by section 503(b)(2)(A) of the Trade Act of 1974. That provision requires that the sum of (1) the cost or value of the materials produced in the BDC plus (2) the direct costs of processing operations performed in such BDC must not be less than 35 percent of the appraised value of such article at the time of its entry into the customs territory of the United States. Materials "produced in a BDC" are defined in section 10.177 (a) of the Customs Regulations as constituent materials of the eligible article which are either (1) wholly the growth, product, or manufacture of the BDC or (2) substantially transformed in the BDC into a new and different article of commerce.

In this case, the basic materials used in the production of Naproxen are imported into the Bahamas. Therefore, the cost or value of such materials may not be included in the 35-percent requirement for Naproxen unless the imported materials are substantially transformed into intermediate products which are new articles of commerce distinct from the chemical precursors and from the eligible article into which the intermediates are subsequently processed.

The chemical reaction of the NPR-2 complex with potassium hydroxide forms a potassium salt of Naproxen. This product is an intermediate in the production of Naproxen and is a compound which is chemically distinct from the precursors NPR-2 and potassium hydroxide. Potassium salt of Naproxen is not isolated and marketed in that form. However, the sodium salt of Naproxen is marketed in several foreign countries for specific medicinal purposes. The functional equivalency of both salts of Naproxen appears to be chemically correct. The manufacturer of the sodium salt of Naproxen indicates that the sodium form was chosen for market because of reasons which were other than medicinal reasons.

The sodium salt of Naproxen is an analgesic with selective anti-inflammatory and anti-pyretic functions. Analgesics marketed by

other companies are sold in either the sodium or potassium salt forms without significant difference in the therapeutic value of the medicines. The distinction between the sodium and the potassium salts of Naproxen appears to be only in the presence of a sodium or potassium element. They apparently are otherwise medicinally interchangeable. In view of this fact, the intermediate produced in the formation of Naproxen is a chemical which is of the same general class or kind as the sodium salt of Naproxen. Therefore, the potassium salt of Naproxen, distinct from its precursors, is a new and different article of commerce. If this intermediate product is subsequently used in the production of a new article, then it would be a constituent material produced in a BDC within the meaning of section 10.177(a)(2) of the Customs Regulations.

The potassium salt is chemically reacted with hydrochloric acid to produce the acid Naproxen which is then precipitated out as crude Naproxen. The subsequent processing of the crude Naproxen is a purifying process to remove discoloration. The "pure" Naproxen is an analgesic similar in therapeutic value to the sodium salt of Naproxen. There is an overlap in their respective analgesic functions. However, they are not to be used interchangeably and are not marketed as interchangeable. The sodium salt form has different characteristics and uses which are attributed to a different rate of absorption. Such differences would also exist between the potassium salt form and the acid form of Naproxen. Therefore, the production of Naproxen from the potassium salt of Naproxen results in a new and different article of commerce for purposes of the GSP. The potassium salt of Naproxen is a constituent material of Naproxen and its cost or value would therefore be includable in the 35-percent value-added requirement for Naproxen.

The further processing of the "pure" Naproxen into a mixture of Naproxen and starch is not a processing operation which results in a new and different article of commerce. This is merely a dilution process and is a preliminary step in the tableting process. The product is still Naproxen, whether in "pure" form or in a fixed ratio with starch.

Holdings.—(1) The processing of NPR-2 into the intermediate potassium salt of Naproxen results in a new and different article of commerce which, if used in the production of Naproxen, is a constituent material produced in the Bahamas within the meaning of the law and regulations under the GSP.

(2) The mixing of Naproxen with a starch excipient does not result in a substantial transformation of the Naproxen into a new and different article of commerce for purposes of the GSP.

(C.S.D. 80-35)

Bonds: Unfair Methods of Competition and Unfair Trade Practices; Amount of Bond Prescribed by 19 U.S.C. 1337 (e) and (g)(3) Determined by ITC

Date: July 13, 1979
File: BON-3-R:CD:D JB
209852

Issue.—When a special bond is required for temporary entry, under provisions of 19 U.S.C. 1337(e) and 19 U.S.C. 1337(g)(3) who shall determine the value of the bond?

Facts.—The statute states that the bond shall be "determined by the Commission and prescribed by the Secretary." 19 U.S.C. 1337(e), Public Law 93-618, title III, section 341(a). The Commission referred to is the International Trade Commission (ITC). The Secretary is the Secretary of the Treasury. Identical language is repeated in 19 U.S.C. 1337(g)(3). ITC rules adopted pursuant to the statute, 19 CFR 210.14 (3), state that the Commission will "(d)etermine the amount of bond pursuant to section 337(e) or section 337(g)(3) of the Tariff Act * * *" Customs Service Regulations, 19 CFR 12.39(b) state that the value of the bond "shall be in an amount equal to the domestic value, as ascertained by the appraising officer, * * *" In accord, 19 CFR 113.14(z).

Law and analysis.—Customs Service Regulations, 19 CFR 12.39(b) and 113.14(z) are in the process of being revised to conform with the 1975 amendments to the Tariff Act of 1930. ITC rules (19 CFR 210. 14(3)) are controlling as to determination of the value of the bond.

Holding.—When a special bond is required pursuant to 19 U.S.C. 1337(e) and 19 U.S.C. 1337(g)(3) the value of the bond shall be determined by the International Trade Commission, as detailed in 19 CFR 210.14.

(C.S.D. 80-36)

In-Bond Entries: Exposed Film Imported for Viewing and Evaluation

Date: July 13, 1979
File: CON-9-09-R:CD:D JB
210659

Issue.—Whether exposed film, intended to be imported into the United States for viewing and evaluation as to content and reproduction standards, is eligible for temporary importation under bond.

Facts.—Importer is a graphic arts company that wishes to import

exposed film into its New York office from Canada. The purpose of the entry is to enable the importer to view the film and evaluate its content and reproduction standards. The film will not be altered or processed in any manner. After viewing all film it will be exported to Canada.

Law and analysis.—All articles imported into the United States are subject to duty unless specifically exempt. One such exemption is provided for in item 864.30, Tariff Schedules of the United States (TSUS), which reads in part: "Articles intended solely for testing, experimental, or review purposes * * *" Such goods are eligible for temporary importation under bond, subject to the usual conditions of such importations, detailed in sections 10.31 to 10.40 of the Customs Regulations. (19 CFR 10.31–10.40).

The question arises whether the goods at issue here may qualify as "articles intended solely for * * * review purposes." A previous case permitted entry under 864.30 of developed film for screening and evaluation. It is understood that such film or films must be used solely for that purpose, and not diverted to other uses. This office has also permitted entry under 864.30 of films to be screened for the purpose of having them judged at a film festival. Such use is construed as "review" within the meaning of section 864.30.

In the present case the film will be imported solely for review at the offices of the importer as to content and reproduction standards. Such use falls within the purview of section 864.30, and is eligible for temporary importation under bond, subject to the usual regulations.

Holding.—Exposed film imported into the United States for review and evaluation as to content and reproduction standards is eligible for temporary importation under bond.

(C.S.D. 80–37)

Bonds Evidence of Authority to Act by Officer of Corporate Surety

Date: July 17, 1979
File: BON-3-R:CD:D MR
209861

Issue.—What evidence of authority to act is required when an authorized officer of a corporate surety executes a Customs bond?

Facts.—A general term bond (Customs form 7595) executed by a surety company was signed by the assistant secretary of the corporation. No power of attorney had been filed for the assistant secretary authorizing him to act on behalf of the corporation.

Law and analysis.—While section 113.34(c), Customs Regulations

(19 CFR 113.34(c)), clearly sets forth the type of evidence of authority to act which is required when an authorized officer of a corporate principal executes a bond, there is no corresponding section dealing with corporate sureties. Section 113.37(d), Customs Regulations (19 CFR 113.37(d)), says, "A bond executed by a corporate surety shall be signed by an authorized officer or attorney of the corporation . . ." Section 113.37(f) outlines the procedure for executing and filing a power of attorney for the agent or attorney of a corporate surety, but it makes no mention of the evidence of authority required when an officer of the corporate surety executes the bond.

In general, no corporate officer has inherent power to do any act on behalf of a corporation unless authorized to do so. For example, there are many cases in which a secretary of a private corporation has been held not to have implied power to bind the corporation by a contract in its name. (19 Am. Jur. 2d. 604). A person dealing with an officer of a corporation is under a duty to use "reasonable diligence and prudence" in determining whether the officer is acting within the scope of his powers. (19 Am. Jur. 2nd 592.) Therefore, Customs must require some evidence that the officer executing a Customs bond on behalf of a corporate surety has authority to bind that corporation.

A power of attorney for the corporate officer, executed and filed in the manner specified in 19 CFR 113.37(f), would clearly constitute sufficient evidence of authority to execute the bond. Alternatively, a certificate similar to the "certificate as to corporate principal", provided for in 19 CFR 113.34(c)(1), may be executed and submitted with the bond in lieu of a power of attorney. Finally, the corporate surety may instead attach to the bond, in lieu of the certificate, evidence outlined in 19 CFR 113.34(c)(2)(iii–iv), namely a copy of the document authorizing such officer to sign such bond, certified by the secretary of the corporation under the corporate seal, together with a document verifying the signature of the officer properly attested under the corporate seal. So long as such a certificate or evidence in lieu thereof is submitted with each bond, there would be no need to have a power of attorney for a corporate officer sent to the Customs Data Center and listed on its computer printout of corporate powers of attorney; nor would there be a need for each port to keep a record of corporate officers authorized to execute Customs bonds at that port.

Holding.—When an authorized officer of a corporate surety executes a Customs bond, either a power of attorney authorizing him to execute the bond on behalf of the corporate surety must be on file under the provisions of 19 CFR 113.37(f), or a certificate or evidence in lieu thereof equivalent to that required of a corporate principal under 19 CFR 113.34(c)(1) and 19 CFR 113.34(c)(2)(iii–iv), respectively, must be submitted with the bond.

(C.S.D. 80-38)

Country of Origin: Unmarked Dinnerware in Marked Cartons To Be Used by Airline for Inflight Meals

Date: July 17, 1979
File: MAR-2-01-R:E:E
710493 HS

This ruling concerns country-of-origin marking on dinnerware that will be sold to an airline for inflight usage by passengers.

Issue.—Whether the marking of containers is sufficient for dinnerware that will be imported expressly and exclusively for sale to a company that will exclusively resell the merchandise in its original cartons to an airline company that will use the dinnerware to serve passengers inflight.

Facts.—Dinnerware is manufactured in Japan. The dinnerware is to be imported by the importer expressly and exclusively for sale to another company. Pursuant to an exclusive national contract, this company will resell the dinnerware to an airline company which will use the dinnerware for inflight meals served to passengers.

The dinnerware will be forwarded to the airline company in the original unopened shipping cartons. Only in the event of breakage are the cartons to be opened prior to delivery. The cartons will be marked with the country of origin of the dinnerware.

Law and analysis.—Section 304 of the Tariff Act of 1930, as amended (19 U.S.C. 1304), provides in general that all articles of foreign origin imported into the United States must legibly and conspicuously be marked to indicate the English name of the country of origin to an ultimate purchaser in the United States.

There are, however, certain exceptions to the general rule. Among the exceptions are section 304(a) (3) (D) which provides that articles for which the marking of the containers will reasonably indicate the origin of the articles need not be marked.

For this exception to be granted, the articles must reach the ultimate purchaser in a properly marked container and the container must reach the ultimate purchaser unopened.

Section 134.1, Customs Regulations, defines ultimate purchaser as generally the last person in the United States who will receive the article in the form in which it was imported. Ultimate purchaser does not necessarily mean the ultimate user or consumer of an article.

Although the airline company, in this case, will distribute the dinnerware in-flight for use by passengers, the passengers will not keep the dinnerware, but will return it to the airline company after usage. The passengers, therefore, are clearly not the ultimate purchasers

even though they are the ultimate users. The airline company is the ultimate purchaser of the dinnerware.

While the dinnerware will be sold and resold before reaching the airline company, with the importer selling it to another company who will resell it to the airline company, the airline company will receive the dinnerware in the original unopened shipping cartons bearing the country-of-origin marking, barring breakage.

The purpose of the marking requirements is to enable the ultimate purchaser to decide whether to buy goods with knowledge of the goods country of origin. As the airline company, the ultimate purchaser, will have knowledge of the country of origin of the dinnerware by receiving the dinnerware in original unopened cartons properly marked with the dinnerwares' country of origin, the purpose of the marking requirements will be met. Accordingly, the dinnerware need not individually be marked.

Holding.—Dinnerware need not be individually marked it if will be imported expressly and exclusively for sale to a company that will exclusively resell the merchandise to an airline company that will use the dinnerware to serve passengers in-flight, provided the dinnerware is delivered to the airline company in the original unopened shipping cartons and the cartons are properly marked with the country of origin of the dinnerware.

(C.S.D. 80-39)

Prohibited and Restricted Importations: Merchandise of Foreign Manufacture Bearing an American Trademark; Doctrine of Foreign Equivalents

Date: July 17, 1979
File: TMK-3-R:E:E
709616/709710 SO

This ruling concerns the applicability of the prohibition set forth in section 526 of the Tariff Act of 1930, as amended (19 U.S.C. 1526), against the importation into the United States of merchandise of foreign manufacture bearing an American trademark.

Issue.—Would the importation of soles and heels for shoes bearing the mark "Amazonas" infringe upon the rights of the owner of the registered trademark "Amazon" for soles, half-soles, and flexible taps for shoes.

Facts.—Shipments of rubber soles and heels for shoes have arrived at New York (seaport) from Brazil bearing the mark "Amazonas." The attorney for the trademark owner and Customs officers at New York are both seeking a ruling as to whether these shipments infringe

313-580 O - 80 - 3

upon the rights of the American trademark owner who has recorded its registered trademark "Amazon" with Customs for import protection. The trademark registration is for soles, half-soles, and flexible taps for shoes.

Law and analysis.—Section 526 of the Tariff Act of 1930, as amended, (19 U.S.C. 1526) prohibits the importation into the United States of any merchandise of foreign manufacture bearing a trademark owned by a corporation created or organized within the United States, provided, a copy of such trademark registration is filed with the Secretary of the Treasury and recorded in the manner provided by regulations (19 CFR 133.1–133.7). Any such merchandise bearing a counterfeit mark, within the meaning of section 45 of the act of July 5, 1946 (commonly referred to as the Lanaham Act, 60 Stat. 427; 15 U.S.C. 1127), imported in violation of the provisions of section 42 of the act of July 5, 1946 (15 U.S.C. 1124), shall be seized, and, in the absence of written consent of the trademark owner, forfeited for violations of the Customs laws.

The term "counterfeit" is defined in the law (15 U.S.C. 1127) as a spurious mark which is identical with, or substantially indistinguishable from, a registered mark. Since the mark "Amazonas" is not identical to "Amazon" (except in meaning when translated into English) it is not considered to be a "counterfeit" mark within the definition cited above, and future shipments would not be subject to the procedures set forth in 19 U.S.C. 1526(e) for notice to the trademark owner and seizure and forefeiture to the Government in the absence of written consent of the trademark owner to an alternative disposition.

Infringment of federally registered marks if governed by the test of whether defendant's use is likely to cause confusion, or to cause mistake, or to deceive. It has been noted that the word "Amazonas," when translated into English from the Portuguese, means "Amazon." Under the doctrine of "foreign equivalents," foreign words from common languages are translated into English to determine their confusing similarity to English word marks. The test is whether, to those American buyers familiar with the foreign language, the word would denote its English equivalent. The rationale of this rule is that a foreign word familiar to an appreciable segment of American purchasers may be confusingly similar to its English equivalent, or vice versa. If the foreign word mark is from a modern language and uses simple words translatable by many people, then the meaning of the mark may indeed be confusingly similar to an English word mark having a similar meaning. In this case, it is clear that the two marks, the Portuguese "Amazonas" and the English translation "Amazon," are similar enough to cause confusion, and that the

"Amazon" mark would be infringed by the sale of soles and heels bearing the "Amazonas" mark.

It is now well settled in this country that a trademark protects the owner against not only its use upon the articles to which he has applied it, but upon such other goods as might naturally be supposed to come from him. There is indeed a limit. The goods on which the supposed infringer puts the mark may be too remote from any that the owner would be likely to make or sell. But no such difficulty arises here. It is a matter of common knowledge that heels are likely to be manufactured by the same company that manufactures soles, half-soles, and flexible taps for shoes.

Holding.—We are of the opinion that this case should be decided under the doctrine of "foreign equivalents," and therefore, there is a strong likelihood of confusion. Accordingly, entry of imported soles and heels bearing the mark "Amazonas" would be prohibited as infringing on the registered trademark "Amazon." Importations of infringing merchandise should be detained pursuant to section 133.22 of the Customs Regulations (19 CFR 133.22). Articles detained in accordance with section 133.22 may be released to the importer during the 30-day period of detention if any of the circumstances allowing exemption from trademark restrictions set forth in section 133.21(c) are established.

(C.S.D. 80-40)

Collections and Refunds: Whether Duties on Chinese Elm Seedlings Destroyed Under State Law Are Refundable

Date: July 17, 1979
File: ENT-1-01 R:E:E
306418 MK

This ruling reviews a protest against a district director's refusal to refund the duties paid on merchandise destroyed pursuant to a state law.

Facts.—A shipment of Chinese Elm seedlings was imported and duties were paid. Subsequent to release from Customs custody, a State government agency found the trees to be not virus free. The trees were destroyed, under supervision of the State government agency, pursuant to State law.

Issue.—Is a refund of duties authorized?

Law and analysis.—The importer's protest is based upon 19 U.S.C. 1558(a)(2) and 19 CFR 158.41. The law in question provides, in pertinent part, for a refund of duties, " * * * When prohibited articles

have been regularly entered in good faith and are subsequently exported or destroyed pursuant to a *law of the United States* and under such regulations as the Secretary of the Treasury may prescribe." [Italic added.]

Section 158.41 of the Customs Regulations provides that:

> Merchandise regularly entered or withdrawn for consumption in good faith and denied admission into the United States by any Government agency after its release from Customs custody * * * may be destroyed under Government supervision.

The importer contends that these provisions entitle him to a refund of duties because the merchandise was destroyed under the supervision of a government employee of the State of Michigan, pursuant to a law of that State.

We do not interpret the cited provision of law and regulation as applying to merchandise prohibited or destroyed pursuant to a State law.

A "law of the United States" is a Federal law. Furthermore, under the importer's reasoning, the Secretary of the Treasury would be empowered to prescribe regulations under which State governments should export or destroy prohibited merchandise. The Secretary does not have the jurisdiction to prescribe how State employees do their jobs.

We therefore, conclude that the "Government agency" and the "Government supervision" referred to in section 158.41 of the regulations can, logically and legally, only refer to the Federal Government.

Holding.—Merchandise prohibited by State law does not come within the provisions of 19 U.S.C. 1558(a)(2). The protest is therefore denied in full.

(C.S.D. 80–41)

Commercial Mail Importations: Collection of State Taxes on Importation of U.S.-Made Cigarettes

Date: July 17, 1979
File: RES-2-26 R:E:E
709654 SO

This ruling concerns the role of the U.S. Customs Service in the collection of taxes due a State tobacco tax administrator pursuant to the Jenkins Act (15 U.S.C. 376) upon shipment by mail of U.S.-made cigarettes in small quantities (1,000–2,000 cigarettes) from the British Virgin Islands to individual purchasers in the United States.

Issue.—Would a corporation planning to engage in the business of shipping small quantities of U.S.-made cigarettes by mail from the

British Virgin Islands to individual purchasers in the United States be required by the U.S. Customs Service to report such shipments to the State tobacco tax administrators of the States to which the cigarettes are shipped.

Facts.—A foreign shipper is planning to export small quantities of U.S.-made cigarettes by mail from the British Virgin Islands to individual U.S. consumers for their personal use. The shipper seeks a ruling as to whether or not the Jenkins Act (19 U.S.C. 376) requires that these shipments be reported to the State tobacco tax administrators of the States to which the cigarettes are shipped and what role the U.S. Customs Service would play in the enforcement of the reporting requirements of the Jenkins Act. The shipper is of the opinion that the term "interstate commerce" as used in the Jenkins Act would not include the shipments described above.

Law and analysis.—In general, the Jenkins Act provides that any person who sells or otherwise disposes of cigarettes for profit in interstate commerce (where shipment is made to other than a distributor licensed by or located in a State taxing the sale or use of cigarettes) must provide the tax administrator, in the State where the shipment is made, necessary data upon which to base assessment and collection of the State cigarette tax. The legislative history of the Jenkins Act indicates that the law was enacted to prevent the avoidance of State's sale and use taxes on cigarettes by interstate shipment to consumers in States taxing cigarettes, particularly where the U.S. mails are used to accomplish the avoidance. The shipments are for the most part by parcel post because the light weight and small bulk of the articles, relative to their value, make this an inexpensive method of interstate transportation.

The constitutionality of the Jenkins Act was upheld in the case of *Consumer Mail Order Ass'n of America* v. *McGrath*, D.C.D.C. 1950, 94 F. Supp. 705, affirmed 71 S. Ct. 500, 340 U.S. 925, 95 L. Ed. 668, rehearing denied 71 S. Ct. 611, 341 U.S. 906, 95 L. Ed. 1344. Furthermore, it was held in the case of *United States* v. *E. A. Goodyear, Inc.*, 344 F. Supp. 1096 (1971) that:

> The requirement of furnishing information to State tobacco tax administrators is a reasonable one. At present, every State taxes the sale and/or use of cigarettes, but the amount of tax differs from State to State. There are those in high-tax States who seek to avoid the burden of such taxes by importing cigarettes which are shipped through the mail to them by defendants. Indeed, it would seem impossible to collect taxes on interstate sales of cigarettes through the mails were it not for the Jenkins Act or other reporting requirements.

Holding.—We are of the opinion that sales of cigarettes through the mails in interstate commerce as outlined in your proposal would be

reportable to the State tobacco tax administrator pursuant to the terms of the Jenkins Act. We understand that the practice in the Miami customs district is that shipments of cigarettes by mail into the United States are detained until the importer provides satisfactory evidence that the secretary of the State of Florida has been notified. We would recommend that all ports of entry adopt the Miami practice of requiring evidence of notification of the appropriate State tobacco tax administrator before releasing small shipments of cigarettes to individual purchasers.

We are of the opinion that Customs enforcement of the Jenkins Act in the manner prescribed above is authorized by title 18, section 545 of the United States Code, which provides criminal penalties for persons who knowingly import or bring into the United States any merchandise contrary to law. It was held, in the case of *U.S.* v. *Claybourne*, D.C. Cal. 1960, 180 F. Supp. 448, that the purpose of this section proscribing smuggling or clandestinely introducing merchandise into the United States which should have been invoiced, and knowingly importing or bringing into the United States merchandise contrary to law, without complying with other provisions of law, is to prevent the surreptitious, clandestine, or fraudulent entry of goods into the United States. In order to provide uniformity of treatment by the U.S. Customs Service, a copy of the decision is being circulated to all Customs officers.

(C.S.D. 80-42)

Prohibited and Restricted Importations: Manufacturing Clause of the 1976 U.S. Copyright Law (17 U.S.C. 1601(a))

Date: July 17, 1979
File: CPR-5-R:E:E
709805 MC

This ruling concerns the possible restrictions and prohibitions of the 1976 U.S. Copyright Law applicable to the importation of the book, "Michelangelo, Painter, Sculptor, Architect," printed in Italy and bound in Switzerland.

Issue.—Whether the importation into the United States of the book entitled "Michelangelo, Painter, Sculptor, Architect," would be restricted or prohibited by the "manufacturing clause" of the 1976 U.S. Copyright Law (17 U.S.C. 1601(a)).

Facts.—Two shipments of the book, "Michelangelo, Painter, Sculptor, Architect," printed in Italy and bound in Switzerland, arrived in New York. Two notices of redelivery were issued with

regard to these books on the ground that their importation would violate the 1976 U.S. Copyright Law.

The book in question is an oversized work (10½ by 12½ inches), printed on heavy-coated stock with heavy covers. Its retail list price was $35 until the end of 1978 and is now $40. The same text in a black and white paperback version containing fewer photographs sells for $5.95.

The oversized version consists of 220 pages containing 180 black and white illustrations and 514 color plates. Sixty-two pages are completely textual while 103 pages are all pictorial (with some captions) and 30 pages contain both text and illustration. Several full-page color photographs of Michelangelo's greatest works are featured. Twelve pages consist of a preface, introduction, bibliography, notes, and an index.

Law and analysis.—In general, section 601(a) of the 1976 Copyright Law provides that "the importation into or public distribution in the United States of copies of work consisting preponderantly of nondramatic literary material that is in the Engish language and is protected under this title is prohibited unless the portions consisting of such material have been manufactured in the United States or Canada."

Where the work consists only partially of material protected by the manufacturing clause (i.e., copyrighted text), the test is whether the work consists "preponderantly" of the protected material. The manufacturing requirement would apply if the English language, nondramatic literary text exceeds the pictorial material in importance, even thought more pages of a book might be devoted to the pictures than the text. Both quantitative and qualitative aspects of a book must be appraised in order to determine the relative importance of the non dramatic literary material. Among the factors to be examined include the main purpose of the book, the percentage increase in the monetary value of the book with and without the pictures, and the degree to which the nonprotected material enhances the quality of the work as a whole.

In this case we are of the opinion that the pictures exceed the copyright-protected, nondramatic literary material in importance. Quantitatively, the number of predominantly pictorial pages greatly exceeds the number of pages that consist basically of text. Qualitatively, the photographs transform a history of the life and works of Michelangelo into a beautiful illustrative treasury of great art. As can be seen by comparing the $40 current price of the work with the $5.95 price of the paperback version, the size and color pictures of the work greatly enhance its value.

Holding.—The book described above, entitled "Michelangelo,

Painter, Sculptor, Architect," published in Italy and bound in Switzerland, and bearing the notice of copyright, should not be prohibited entry into the United States by the "manufacturing clause" of the 1976 U.S. Copyright Law (17 U.S.C. 1601).

We are suggesting that our New York office cancel the notices of redelivery and permit distribution of the work in question in the United States.

(C.S.D. 80-43)

Marking: Country-of-Origin Marking Requirements for Eyeglass Frame Components

Date: July 17, 1979
File: MAR-2-05-R:E:E
710338 HS

This ruling concerns the applicability of 19 U.S.C. 1304 to unfinished eyeglass frame component materials imported from Italy.

Issue.—Whether the importer substantially transforms the imported eyeglass parts, becoming the ultimate purchaser, and necessarily knows the origin of the parts.

Facts.—The importer will purchase and import directly from an Italian manufacturer plastic eyeglass frame fronts and temples. The subject frame fronts and temples will be imported in a neutral and unfinished condition.

After importation, the frame fronts and temples will be subject to processing before they are assembled and dyed. Two styles of frames will be created.

The following operations are performed on the subject fronts and temples by the importer after importation into the United States:

Temples

1. Temple hinges removed and temples ultrasonically cleaned and sorted.
2. Temples trimmed according to style specifications.
3. Temples machined to accommodate the attachment of trim.
4. Temples cleaned prior to assembly with front.
5. Temples engraved (Elasta frame only).
6. Temples trimmed further (Elasta frame only).
7. Temples subjected to five-part milling process (Elasta frame only).
8. Seven-piece hinge assembled and fixed on temple (Elasta frame only).
9. Lictite injected into hinge screws (Elasta frame only).

Frame fronts

10. Hinge holes drilled, frame composition tested, and hinges attached.

11. Frame front heated, reformed, and reshaped to assure proper meniscus curve for the lens.

12. Frame front inspected and ultrasonically cleaned.

13. Frame front and temples assembled.

14. Pantoscopic angle for frame determined.

15. Frame sterilized and dye base applied in 10-step process.

16. Frame immersed in Freon bath.

17. Frame dyed.

18. Protective gloss coating applied to frame.

19. Frame adjusted and set in accordance with fitting requirements.

20. Frame stamped with requisite optical specifications.

Sixty-one percent of petitioner's costs will be attributable to the post-import manufacturing process of one of the frame styles, and the domestic cost involved in the manufacture of the other frame style will also exceed the cost of procuring the unfinished neutral components from the foreign supplier. According to the petitioner's cost analysis, nearly 85 percent of its domestic costs will be attributable to the processes of machining, dyeing, and assembly.

Law and analysis.—Section 304 of the Tariff Act of 1930, as amended (19 U.S.C. 1304), provides in general that all articles of foreign origin imported into the United States must be legibly and conspicuously marked to indicate the English name of the country of origin to the ultimate purchaser in the United States.

There are, however, certain exceptions to the general rule. Among the exceptions are section 304(a)(3)(H) which provides that if an ultimate purchaser, by reason of the circumstances of its importation, necessarily knows the country of origin of the article, the article need not be marked to indicate its origin.

19 CFR 134.35 provides that an article used in the United States in manufacture which results in an article having a name, character, or use differing from that of the imported article, will be within the principle of the decision in the case of *United States* v. *Gibson-Thomson Co., Inc.*, 27 CCPA 267 (CAD 98). Under this principle, the manufacturer or processor in the United States who converts or combines the imported article into the different article will be considered the "ultimate purchaser" of the imported article within the contemplation of section 304(a), Tariff Act of 1930, as amended (19 U.S.C. 1304(a)).

Generally, a manufacturer is considered an ultimate purchaser if a manufacturing process is performed on an imported item so that the item loses its identity and becomes an integral part of a new article with a new name, character, and use.

313-580 O - 80 - 4

An item might lose its identity and become an integral part of a new article by becoming functionally necessary to the new article rather than being merely decorative or accessory, or by having little or no value as an item of commerce apart from its being part of the new article. Generally, the imported article must lose its identity or independent functional significance as a result of the further manufacturing process in order to be exempted pursuant to 19 U.S.C. 1304(a) (3) (H).

In this case, the frames and temples cannot be used in their imported condition except by the producer of the finished frames. Mere assembly will not render them useful. The frames and temples must undergo substantial adjustment to accommodate the lenses and to properly fit the human face, as well as an elaborate dyeing process. This requires the attention of skilled workers. Domestically purchased hinges, screws, nuts, and trim are used in finishing the eyeglasses

In short, the imported frames and temples become an integral part of a pair of eyeglasses The processes that the imported frames and temples go through after importation result in a substantial transformation. Therefore, the importer of the frames and temples is the ultimate purchaser.

For the 304(a)(3)(H) exception to marking to apply, it must be shown that the ultimate purchaser necessarily knows the origin of the goods. In this case, the importer will purchase and import the plastic eyeglass frame fronts and temples directly from an Italian manufacturer. The ultimate purchaser, therefore, knows the origin of the frames is Italy. Accordingly, the frame fronts and temples fall under the 304(a)(3)(H) exception and need not be marked.

Holding.—The importer is the ultimate purchaser of the plastic eyeglass frame fronts and temples and necessarily knows the origin of the goods due to the circumstances of their importation. Accordingly, the plastic eyeglass frame fronts and temples may be excepted from individual marking pursuant to 19 U.S.C. 1304(a)(3)(H).

(C.S.D. 80–44)

Marking: Country-of-Origin Marking of Silver-plated Flatware in Prepackaged Sets

Date: July 17, 1979
File: MAR 2–05 R:E:E
710685 EB

This ruling concerns country-of-origin marking requirements for imported silver-plated flatware.

Issue.—May silver-plated flatware to be imported and sold in prepackaged sets be excepted from the country-of-origin marking requirements applicable to the individual flatware pieces?

Facts.—A foreign manufacturer of silver-plated flatware seeks to import his product into the United States. The flatware articles themselves are not marked. The flatware is sold in predetermined sets contained in "presentation packs." These packs are marked to indicate the country of origin of the flatware. The manufacturer asserts that the container marking is sufficient to give to the ultimate purchaser notice of the country of origin of the flatware.

Law and analysis.—Section 304 of the Tariff Act of 1930, as amended (19 U.S.C. 1304), generally requires that each article of foreign origin imported into the United States be marked to indicate its country of origin to its ultimate purchaser. Section 134.43(a) of the Customs Regulations further requires that certain items, including silver-plated knives and forks, be permanently marked. Both the requirements have been construed to be subject to the general exception from marking provided in section 134.32(d) for the regulations, which excepts from individual marking articles for which the marking of the containers will reasonably indicate the origin of the articles.

We do not believe, however, that this exception may be applied in the case of silver-plated flatware in presentation packs. It is customary for each article of flatware to be marked. It is reasonable to expect that the purchaser at retail might open the presentation pack to examine the merchandise. Once the packages have been opened, it is conceivable that the container markings might no longer be intact, or that the unmarked flatware pieces from the open packages might be purchased individually.

We believe, therefore, that the standard marking requirements must apply in this case. Silver-plated forks and cutlery will be subject to permanent marking in accordance with section 134.43(a) of the Customs Regulations. Other items must be marked in any sufficiently legible, conspicuous, and permanent manner.

Holding.—It is not reasonable to expect that the country-of-origin markings on presentation packs containing sets of silver-plated flatware will reach the ultimate purchaser intact. Therefore, such flatware is subject to the individual marking requirements of 19 U.S.C. 1304, in the case of most flatware items, and the special requirements of section 134.43(a) of the Customs Regulations, in the case of silver-plated forks and cutlery.

(C.S.D. 80-45)

Special Appraisement: Processed Cloth From the Virgin Islands; General Headnote 3(a), TSUS

Date: July 19, 1979
File: R:CV:V JV
541964

This is in reference to your communication of May 7, 1979, concerning the treatment of laminated cloth imported from the U.S. Virgin Islands, insular possessions outside the Customs territory of the United States.

Before addressing the subject matter of your request, a summarization of the pertinent provisions of general headnote 3(a), Tariff Schedules of the United States (TSUS), and section 7.8(d) of the Customs Regulations governing the treatment of merchandise from insular possessions of the United States is in order.

General headnote 3(a), TSUS, provides as follows:

> [A]rticles imported from insular possessions of the United States * * * are subject to the rates of duty set forth in column numbered 1 of the schedules, except that all such articles * * * manufactured or produced in any such possession from materials the growth, product, or manufacture of any such possession * * * which do not contain foreign materials to the value of more than 50 percent (70 percent of their total value with respect to watches and watch movements), coming to the Customs territory of the United States directly from any such possessions, * * * are exempt from duty.

Section 7.8(d) of the Customs Regulations (19 CFR 7.8(d)) provides for the determination of the percentage of foreign materials contained in products from insular possessions:

> (d) In determining whether an article produced or manufactured in any such insular possession contains foreign materials to the value of more than 50 per centum (70 percent in the case of watch movements) a comparison shall be made between the *actual purchase price* cf the foreign materials * * * plus the cost of transportation to such insular possession * * * and the final appraised value in the United States determined in accordance with section 402, Tariff Act of 1930, as amended, of the article brought into the United States. [Italic ours.]

You explain that for many years your client has been engaged in the business of importing waterproof and/or laminated cloth into the United States. The cloth in unwaterproofed form has been imported from various European countries into the Virgin Islands where it is further processed. When imported into the Customs territory of the

United States, the finished product has been accorded free entry under the provisions of general headnote 3(a).

In order to minimize its financial risk, the importer is contemplating a new procedure by which instead of purchasing unprocessed cloth in Europe, it, together with another firm as joint venturer, intends importing the material into the Virgin Islands as consignees with ownership remaining with the European supplier, a State-owned enterprise. The joint venturers would then process the cloth either directly or indirectly through various subsidiaries. Because the proposed transactions will involve consignment rather than purchase, no actual purchase price will be available to establish the value of the foreign material; nor will there be sales of such or similar merchandise in suitable quantities by the same supplier at arm's length for importation into the Virgin Islands, or shipments on a consignment basis upon which to determine the existence of comparable values.

In view of the foregoing, you request that a ruling be issued by headquarters instructing the appraising officer that, in the absence of a specific reason to conclude that the stated or declared value of consigned foreign materials entering the Virgin Islands differs from the value of such materials for the purposes of general headnote 3(a), TSUS, to accept the declared value as representing the actual value for appraisement purposes. If, however, the appraising officer should determine that the stated value is insufficient to establish value, you propose several alternative methods of valuation.

The first alternative is that the merchandise being brought into the Virgin Islands be valued at the "option price." This would contemplate that there be a contract between the joint venturers and the supplier pursuant to which the supplier would agree upon a price at which the joint venturers could purchase for their own account any and all of the merchandise which would be the subject of the transaction. Any such price would not be set by the seller at a level below that which it would be willing to accept in an arm's length transaction.

The second alternative would be for the joint venturers to purchase a portion of the material at an "agreed price," accepting the balance on consignment. The portion of the merchandise which the joint venturers would agree to purchase could range between 10 and 25 percent of the total quantity of cloth to be shipped to the Virgin Islands.

As independent evidence that the value of the foreign cloth was a realistic value, the joint venturers would be prepared to offer evidence relating to the importation into the United States of garmets made from similar cloth in the same supplying country or, if necessary, undertake importations into the Virgin Islands of similar cloth from suppliers in other European countries.

For the most part, Customs practice with regard to the valuation of foreign merchandise entered into the Virgin Islands for processing under general headnote 3(a), TSUS, and section 7.8(d) of the Customs Regulations, has been clear insofar as purchased merchandise is concerned. The appraising officer has generally accepted the transaction price as representing the value of the merchandise where it is clear that the transaction involved is an arm's length sale. Customs, in following this practice, has not been bound by the strictures of U.S. appraisement law, as promulgated by 19 U.S.C. 1401a and 1402. Consequently, it has been free to determine value on any reasonable basis. It is your opinion that this same latitude be granted with respect to the valuation of foreign materials entered into the Virgin Islands on consignment for further processing, at least when the values of similar merchandise are not available for comparison.

In *Delaware Watch Co., Inc.* v. *United States*, 64 Cust. Ct. 659, R.D. 11698 (1970), which involved the interpretation of section 301, Tariff Act of 1930, the predecessor to headnote 3(a), as well as 19 CFR 7.8(d), the Government contended that the Customs valuation statutes (19 U.S.C. 1401a and 1402) could properly be used to determine the "value" of the foreign materials contained in certain insular possession watch movements, rather than the "actual purchase price" as provided for by 7.8(d), Customs Regulations. The court stated that *in the absence of a specific congressionally imposed requirement to use the valuation statutes in the manner sought by the Government, it was reasonable to conclude that Congress intended to give the Customs Service reasonable discretion to employ any appropriate method of valuation.* The court concluded that 7.8(d), Customs Regulations, was not inconsistent with Congress intent and that congressional action which later revised parts of the law, affirmed the validity of the regulation by not overruling Customs interpretation of section 301. [Italic ours.]

Although the *Delaware Watch* case affirmed the validity of the regulation involved, it did little to clarify either the meaning of "value" in headnote 3(a) or of "actual purchase price" in 7.8(d), Customs Regulations. Instead, the court indicated that the regulation involved merely "direct[ed] the Customs officials concerning the manner in which the value of foreign materials is to be ascertained." Because the testimony in the case established that the Customs examiner had attempted to calculate the actual purchase prices of the materials involved, the court found those figures to be the "value" of the foreign materials contained in the imported merchandise, and not those calculated pursuant to 19 U.S.C. 1401a or 1402. Accordingly, the courts have validated 7.8(d) of the Customs Regulations; have stated that it mandates Customs to find a value for foreign components contained in importations from the insular possessions based on the "actual

purchase price" of those materials; and have implied that as long as Customs makes an effort (other than by using 19 U.S.C. 1401a or 1402) to calculate the actual purchase price of foreign components, our decision will not be disturbed by the courts.

We would agree that if the appraising officer has no specific reason to believe that the declared values are not representative of the actual purchase price of the consigned foreign materials, he should accept those values in making his appraisement. Likewise, if he determines such values to be deficient or there is no evidence of comparable values he may, consistent with the underlying judical decision, employ any appropriate method of valuation to find value.

We have carefully considered your proposals for alternative methods for constructing a purchase price and find them not to be objectionable so long as their application results in the ascertainment of a reasonable value, that is, a value approximating the actual purchase price of the foreign merchandise. We should point out, however, that regardless of the method of valuation employed by the importer in arriving at the stated value, it is, of course, incumbent upon him to prove to the satisfaction of the appraising officer that a bona fide effort was made to arrive at the best approximation possible.

(C.S.D. 80-46)

Carrier Control: Application of the Coastwise Laws to Foreign-Built Barge Used to Transport Fish

Date: July 20, 1979
File: VES-7-02-R:CD:C
103982 IKT

This ruling concerns the transportation of fish for processing and of packaging materials for consumption between points in U.S. territorial waters.

Issues.—1. Whether pursuant to title 46, United States Code, section 883, a foreign-built barge may lade either unprocessed fish for processing or processed fish at one point in the United States and transport them to another point in the United States where they will be landed.

2. Whether a foreign-built barge which carries fish-packaging materials from Canada may unlade the materials temporarily at a costwise point, relade them at the same point, and transport them to a second coastwise point without violating section 883.

3. Whether a foreign-built barge may lade fish-packaging materials at one point in the United States and transport them to another point in the United States where they will be landed without violating section 883.

Facts.—The operators of a non-self-propelled, fish-processing barge, built in Canada and registered in the United States, plan to use the barge to process and store fish and seafood products received from U.S. fishing boats at various points in U.S. territorial waters. At the same point at which the barge would receive the fish they would be processed and discharged. A qualified tug would then tow the barge to another processing point. The operators would also like to transport processed or unprocessed fish on the barge from one coastwise point to a second coastwise point where they would be landed.

In addition, the barge would carry packaging materials from Canada to a point in U.S. territorial waters where the fish would be processed. The packaging materials consist of unconstructed boxes, corn sirup glazing liquid, straps, plastic bags, and labels. Some of the unused packaging materials would be landed at that point by qualified lighters and, if necessary, placed in a bonded warehouse or otherwise stored. Other packaging materials would remain on board the barge to be used and landed later as packages containing seafood. The packaging materials temporarily stored would be returned to the barge when the barge had finished processing at that point. You state that the return of the stored materials was always intended. The barge would then move to the next U.S. processing point.

The barge would also receive "other packaging materials" at a U.S. processing point. We assume that "other packaging materials" means materials not transported from abroad by the barge. These materials would not be entirely consumed (which we assume means used as packages containing seafood) or removed at that point. The barge would then transport any remaining materials to another processing point where some would be used and landed as packages containing fish and the unused materials might again be removed for storage.

Law and analysis.—1. Title 46, United States Code, section 883, prohibits a foreign-built vessel from transporting merchandise between points in the United States embraced within the coastwise laws, either directly or via a foreign port for any part of the transportation. Merchandise includes goods, wares, and chattels of every description.

The Customs Service has ruled that to be merchandise within the meaning of section 883, material need not be salable or even of use to anyone else so long as it has some value to the owner of which he would be deprived by forfeiture. Since the seafood, whether processed or unprocessed, has some value to the owner of which he would be deprived by forfeiture, we consider it to be merchandise within the meaning of section 883.

You contend that the movement of seafood products between coastwise points is permissible because the seafood products would not be made available for sale, or as a practical matter, entered into the

stream of commerce until after their arrival at the second coastwise point. However, section 883 prohibits simply the use of a non-coastwise-qualified vessel to lade merchandise at one coastwise point, transport it to another coastwise point, and unlade it at the second coastwise point, regardless of the time the merchandise is made available for sale. Therefore, a barge which lades seafood products at one point in the United States, transports them to another point in the United States, and there unlades the seafood products, will violate section 883.

You state that you believe the packaging material is not "merchandise" within the meaning of section 883 since it is like fuel, dunnage, stores, and other items which are integral to the operation of the vessel and which are consumed. We do not agree that packaging materials actually used as seafood packaging are consumable vessel supplies since they are not for the consumption, sustenance, or medical needs of the crew or passengers. Thus, if the barge relades the packaging materials regardless of how they were stored prior to being reladen, transports the materials between coastwise points, and unlades the packaging materials at a second coastwise point, it will have transported merchandise in violation of section 883.

You argue that even if the packaging materials are considered to be cargo, the materials are in a continuous movement from a foreign point and not in a movement between two U.S. points. For support, you cite *The Bermuda*, 70 U.S. (3 Wall.) 514 (1866):

> A transportation from one point to another remains continuous so long as intent remains unchanged, no matter what stoppages or transshipments intervene. Id. at 553.

This quotation implies that you consider intent relevant to determine whether a coastwise transportation has taken place. However, in *The Bremuda*, the Supreme Court examined intent to determine whether an exportation to a belligerent nation occurred in violation of the rule prohibiting belligerent trade. While intent is an essential element of an exportation, *see Swan & Finch* v. *United States*, 190 U.S. 143, 145 (1903), we do not consider section 883 to require an element of intent to prove the occurrence of a coastwise transportation, *see generally*, *American Maritime Association* v. *Blumenthal*, 590 F. 2d 1156, 1164 (D.C. Cir. 1978), *cert. denied*, 47 U.S.L.W. 3739 (May 14, 1979) (No. 78–1287). In cases involving section 883, the Customs Service has examined intent to determine whether an exportation of merchandise has occurred to break the continuity of a transportation between two coastwise points (see also 19 U.S.C. 1588). However, that issue is not raised by the facts at hand.

Holding.—1. Pursuant to title 46, United States Code, section 883, a foreign-built barge may not lade either unprocessed or processed

313-580 O - 80 - 5

fish at one point in the United States and transport the fish to another point in the United States and unlade them.

2. A foreign-built barge carrying packaging materials from Canada may unlade the materials temporarily at a coastwise point, relade the materials at the same point, and transport them to a second coastwise point, but may not unlade them there without violating section 883.

3. A foreign-built barge may not lade packaging materials at one point in the United States and transport them to another point in the United States and unlade them without violating section 883.

Effect on other rulings.—This ruling follows Customs Service ruling VES-7-02-R:CD:C 103421 CH, dated June 16, 1978, which applies only to the situation where fish-packaging materials were offladen at dockside only for the purpose of entering the packaging materials and thus were not deemed to have been landed within the meaning of section 883.

(C.S.D. 80-47)

Prohibited and Restricted Merchandise: Whether Characters on the Faces of Children's Watches Are Piratical Copies

Date: July 23, 1979
File: CPR 3-01 R:E:E
710747 MC

This ruling concerns the possible restrictions and prohibitions of the 1976 U.S. Copyright Law applicable to the importation of children's watches bearing some resemblance to copyrighted figures.

Issue.—Whether the characters appearing on the face of each of the five sample watches bear substantial similarity to recorded copyright-protected figures so as to constitute piratical copies, within the meaning of section 133.42 of the Customs Regulations, prohibited from importation.

Facts.—650 children's watches were imported into the United States from Hong Kong. This office was requested to determine whether a copyright infringement exists. The watches are currently in general order.

Five different watches were submitted as samples, each featuring a different printed character on its face. The first watch has a picture of a mouse-like person holding a rose in his left hand. Certain features of the character bear some resemblance to "Mickey Mouse," copyrighted by Walt Disney Productions, Inc. The second watch face contains the drawing of a girl with flowing blond hair and star-patterned dress, walking down a flight of stairs. Instead of a second

hand, the watch features a shoe, presumably Cinderella's glass slipper, moving up and down with the beat of each second. The image conveyed is that of the storybook character Cinderella; both Disney and Pioneer Merchandise Co. have copyrighted Cinderella designs.

The third and fourth watches feature a cowboy and cowgirl, respectively, each holding a pistol which moves up and down marking the seconds. Pioneer also has a copyright on a cowboy watch, but no copyright of a cowgirl figure has been recorded with Customs. Printed on the fifth watch is a figure dressed in a cape and carrying a rose. This character has both mouse and pig features but resembles no copyright-protected drawing.

Law and analysis.—Section 602(a) of the 1976 U.S. Copyright Law (17 U.S.C. 602(a)) states: "Importation into the United States, without the authority of the owner of copyright under this title, of copies or phonorecords of a work that have been acquired outside the United States is an infringement of the exclusive right to distribute copies or phonorecords under section 106, actionable under section 501." Under 17 U.S.C. 603(c), "Articles imported in violation of the importation prohibitions of this title are subject to seizure and forfeiture in the same manner as property imported in violation of the Customs revenue laws." The prohibited importations, referred to as piratical copies, are defined in section 133.42 of the Customs Regulations as "actual copies or substantial copies of a recorded copyrighted work, produced and imported in contravention of the rights of the copyright owner."

After a comparison of the first submitted watch with the recorded copyright, we are of the opinion that the mouse figure on the face of the sample watch is not substantially similar to the recorded "Mickey Mouse" character. The total effect or the image conveyed by the mouse character on the sample watch would not cause the average lay observer to believe that the mouse figure was appropriated from the "Mickey Mouse" character.

Specifically, the following features differentiate the watch figure from "Mickey Mouse." While "Mickey Mouse" wears gloves, distinctive short pants, and large, light-colored "puffy" shoes, the mouse here in question wears no gloves, his pants are long and flared in a modern style and his shoes are of a normal modern style with heels. Unlike "Mickey Mouse," the watch figure wears a jacket, has neither a tail nor buttons and holds a flower in his hand.

Although the second watch features a Cinderella character, it cannot be considered a piratical copy of the Disney version. The watch figure has a different hair style, color, dress, and background. The Disney version has no stars on her dress and the ticking slipper here was not employed by Disney.

Pioneer Merchandise copyrighted both its own Cinderella watch and a cowboy watch. However, due to the fact that Pioneer no longer produces watches and no Pioneer samples are available for comparison, we will assume that the present samples do not infringe. If Pioneer shall resume production of its copyrighted watches, appropriate action may be taken with regard to future shipments.

No cowgirl figure has been recorded with Customs and the fifth watch figure resembles no copyrighted character.

Holding.—We are satisfied that the mouse and Cinderella characters on the face of the sample watches do not constitute a piratical copying of the recorded "Mickey Mouse" and Disney Cinderella characters within the meaning of section 133.42 and 17 U.S.C. 602 and 603. The other three watches bear no resemblance to any other copyrighted character available for comparison. Accordingly, we are recommending that the watches be released from storage and permitted entry.

(C.S.D. 80-48)

Temporary Importation Under Bond: Drugs Intended Solely for Testing; Failure to Export Under Customs Supervision

Date: July 23, 1979
File: CON-9-09-R:CD:D
210591 JB

Issue.—Whether drugs imported under item 864.30, TSUS, temporary importation under bond for testing purposes, must be tested in the United States. Additionally, whether such goods may be transported abroad, without Customs supervision, for further testing, without violating the conditions of the bond.

Facts.—A producer of medical supplies imported various drugs for testing purposes under item 864.30, TSUS, which permits temporary free entry, under bond, to "Articles intended solely for testing * * *." This merchandise was shipped out of the country to continue the testing in France, but was not exported under Customs supervision as required in section 10.38 of the Customs Regulations (19 CFR 10.38). Regulations promulgated pursuant to the statutory authorization for temporary importation bonds require that goods so admitted be destroyed or exported under Customs supervision within a stipulated time period. Failure to comply results in violation and assessment of liquidated damages (19 CFR 10.38, 10.39).

The importer here advances two major assertions intended to demonstrate why the bond has not been violated. First, that mer-

chandise imported for testing under item 864.30, TSUS, is not restricted to testing solely in the United States. Second, that shipment of the drugs to France "as an integral part" of the testing program did not constitute an "exportation" as contemplated in sections 10.38 and 10.39 of the Customs Regulations (19 CFR 10.38 and 10.39).

The district director of Customs in Philadelphia asserts the contrary of importer's two claims and recommends assessment of liquidated damages. He believes the conditions of the temporary importation bond were violated when the drugs were shipped out of the country without Customs supervision.

Law and analysis.—Importer suggests that it is permissible to ship drugs out of the country without Customs supervision because the testing program continues abroad. This claim is contingent upon a finding that the shipping is not an "exportation" within the meaning of sections 10.38 and 10.39 of the Customs Regulations (19 CFR 10.38 and 10.39). If the shipment does constitute a valid exportation the bond has clearly been breached.

The statute and Customs Regulations offer little guidance on this question. Neither the headnotes to schedule 8, subpart C, TSUS, or the regulations specify where testing under 864.30 must take place. Generally, of course, the provision is designed to permit testing in the United States; if one wanted to continue testing elsewhere normal procedure would be to export under supervision and cancel the bond. Here, however, the importer has already shipped goods out of the country without supervision.

Customs Regulations, section 10.39(d)(1) (19 CFR 10.39(d)(1)) state the following: "If any article entered under schedule 8, part 5C, Tariff Schedules of the United States * * * has not been exported or destroyed in accordance with the regulations * * * the district director shall make a demand in writing under the bond for the payment of liquidated damages. * * *"

An exportation has been defined by the Solicitor General and the courts as "a severance of goods from the mass of things belonging to this country with an intention of uniting them to the mass of things belonging to some foreign country or other." 17 Op. Atty. Gen. 579 (1883) at p. 583; cited with approval *Swann & Finch Co.* v. *U.S.*, 190 U.S. 143 (1903).

When a question arises as to whether or not a valid exportation has occurred the intent of the exporter has been held the determining factor. If the initial bona fide purpose is to remove the goods to another country, with no intention of returning them to the United States an exportation may occur even if intervening factors force a change. Similarly, the mere shipping of goods abroad, with an actual intent to return them, would not constitute an exportation.

It is clear that there was here a bona fide intent to carry goods out of the United States, with no intention of returning them.

There are some indications that exportation also requires an intent to seek a foreign market, to enter the commerce of the country exported to (27 Op. Atty. Gen. 113, (1908); 28 Op Atty. Gen. 173 (1910)). In 1916, the Attorney General denied drawback on cigarettes sent abroad for destruction, noting that the goods were "not exported for use in, or with any intention of having them enter into, the commerce of any foreign country" (31 Op. Atty. Gen. 1 (1916), at p. 2). Here, and in similar cases, the attempt to export was intended to enable the exporter to evade the intent of the statutory grant. The suggestion that goods should be intended for commerce can be distinguished as necessary in some instances to carry out the intent of Congress. With regard to testing materials, the fact that they do not enter into commerce is not similarly relevant. Further, the opinion cited above suggests that "use" of imported goods is sufficient. This requirement distinguishes the present case from examples where goods are destroyed, or merely stored, in an effort to establish an exportation. Although the drugs were, or will be, ultimately destroyed, that result is not the purpose of the exportation. Rather, the use in testing is the purpose.

There appears no compelling reason to adopt the restricted definition of "exportation" that the importer here implicitly urges. Such a definition is not required by law and seems contrary to the policy of maintaining Customs control over goods granted temporary free entry under bond.

Holding.—Drugs imported for testing under item 864.30, TSUS, may not be shipped abroad without Customs supervision as provided in section 10.38 and 10.39 of the Customs Regulations (19 CFR 10.38 and 10.39), without violating the terms of the temporary importation bond.

(C.S.D. 80-49)

Inbond Merchandise Intransit Through the United States: Goods Entered For T. & E. Via a Military Transportation Officer to an Overseas Area Exchange

Date: July 23, 1979
File: BON-1-R:CD:D MR 210707

Issues.—May imported merchandise be shipped inbond to a military transportation officer for export to an overseas area exchange and not be liable for duty?

Facts.—A firm is importing sweaters for export to the Okinawa area exchange. The sweaters will be brought in through the Atlanta foreign trade zone, shipped to the military transportation officer in Oakland, Calif., and then sent to Okinawa.

Law and analysis.—According to 19 U.S.C. 1553:

> Any merchandise, other than explosives and merchandise the importation of which is prohibited, shown by the manifest, bill of lading, shipping receipt, or other document to be destined to a foreign country, may be entered for transportation in bond through the United States by a bonded carrier without appraisement or the payment of duties and exported under such regulations as the Secretary of the Treasury shall prescribe. * * *

The sweaters have been shown to be destined for a foreign country, Japan.

An exportation is usually defined as "a severence of goods from a mass of things belonging to this country with an intention of uniting them with a mass of things belonging to some foreign country" (17 Op. Atty. Gen. 579 (1883)). It is intended that the sweaters will be sold and used in Japanese territory thereby entering the commerce of Japan. This is sufficient in order for there to be an exportation. It should also be pointed out that the shipment of goods to overseas exchanges has been considered an exportation for the purposes of drawback. Thus, the sweaters do qualify under 19 U.S.C. 1553 for transportation and exportation without payment of duty.

The importer and the military transportation officer to whom the goods are transferred must, of course, comply with sections 18.20–18.24 of the Customs Regulations (19 CFR 18.20–18.24) concerning merchandise in transit through the United States to foreign countries in order to satisfy the transportation and exportation bond covering the sweaters.

Holding.—Assuming compliance with sections 18.20–18.24 of the Customs Regulations, goods may be transferred from a foreign trade zone for transportation and exportation via a military transportation officer to an overseas area exchange without appraisement or payment of duty.

(C.S.D. 80–50)

Carrier Control: Customs Treatment of Aircraft as Private or Commercial

Date: July 23, 1979
File: AIR-4-01-R:CD:C
104072 JM

This ruling concerns the treatment of an aircraft as private or commercial for Customs purposes.

Issue.—Is an aircraft, leased to and piloted by the owner of an air charter service, considered to be commercial or private when used to transport representatives and customers of a regular patron of the air charter service on a fishing trip to Canada with the pilot being reimbursed for fuel and his food and lodging.

Facts.—An aircraft, leased to and piloted by the owner of an air charter service, was used to fly the manager of (name of company), (company's) salesman, and three of (company's customers) from the United States to Canada and back. The pilot has stated that the aircraft is leased to his charter service at the rate of $80 per hour of flying time which includes fuel; that (name of company) reimbursed him approximately $35 per hour of flying time for fuel on the trip; and that in appreciation (company's) frequent use of his charter service, he volunteered to provide the aircraft if (name of company) would provide the fuel for the subject fishing trip. In addition, while the pilot has stated that he paid his own expenses for fishing, he presumably is referring to the cost of a fishing license since he told the Customs inspector at Williston, N. Dak., upon return to the United States, that he was being compensated by the passengers for his food and lodging at approximately $20 a day.

Upon departure from the United States, the pilot failed to obtain an outward clearance and file an outward declaration as required for commercial aircraft under sections 6.3 and 6.8, Customs Regulations.

Law and analysis.—Customs has defined "private aircraft" as any civil aircraft engaged in a personal or business flight to or from the United States and not carrying passengers and/or cargo for compensation or hire, nor departing from the United States for purposes of loading passengers and/or cargo for compensation or hire. This definition interprets section 6.3 (a) and (c), Customs Regulations, relating to entry and clearance of aircraft, and is in agreement with the definition of "private aircraft" contained in title 49, United States Code, section 1741. The term "private aircraft" is defined in section 1741 (d)(1) as "any civilian aircraft not being used to transport persons or property for compensation or hire." Guidelines on the application of section 1741(d)(1), and section 6.3, Customs Regulations, state that for Customs purposes, a person transported for compensation or hire on an aircraft is a person who would not be transported unless there were some payment by or for him and who is not connected with the operation of the aircraft or its navigation, ownership, or business.

In this case, the pilot has acknowledged the fact that he was reimbursed for fuel, food, and lodging and that he volunteered to provide the aircraft in appreciation of (company's) frequent use of his charter service. This fact situation is covered by paragraph 1a of the information sheet, "Definition of 'Private' Aircraft for U.S. Customs Pur-

poses," distributed to field offices and the public by the Office of Operations.

Holding.—An aircraft, leased to and piloted by the owner of an air charter service, is a commercial aircraft when used to transport representatives and customers of a regular patron of the air charter service on a fishing trip to Canada with the pilot being reimbursed for fuel and his food and lodging.

Decisions of the United States Court of Customs and Patent Appeals

APPEAL NO. 79-15

ASG INDUSTRIES, INC., PPG INDUSTRIES, INC., LIBBEY-OWENS-FORD COMPANY, AND C E GLASS, APPELLANTS *v.* THE UNITED STATES, APPELLEE, C.A.D. 1237

(Decided February 21, 1980)

Before MARKEY, *Chief Judge*, RICH, BALDWIN, and MILLER, *Associate Judges*, and PENN,* *Judge*.

PER CURIAM.

Upon consideration of appellee's petition for rehearing, the action requested by appellee is denied.

However, in response to appellants' memorandum in opposition, the court's slip opinion under date of November 29, 1979, is modified by adding the following footnote 16.5 on page 18 (symbol indicated after the period in line 4):

[16.5] Section 771(6) of the Tariff Act of 1930, added by the Trade Agreements Act of 1979 and conditionally effective January 1, 1980, lists specific items that are deductible in determining the net subsidy. The list does not include "locational" expenses, and the Senate committee report states:

> The list is narrowly drawn and is all inclusive. For example, offsets under present law which are permitted for indirect taxes paid but not actually rebated, or for increased costs as a result of locating in an underdeveloped area, are not now permitted as offsets. * * *

S. Rept. No. 96-249, 96th Cong., 1st sess. 86, *reprinted in* [August 1979] United States Code Cong. & Ad. News No. 6A, 3, 94. The House committee report underscores that the list is all inclusive. H. Rept. No. 96-317, 96th Cong., 1st sess. 74 (1979).

*The Honorable John G. Penn, U.S. District Court for the District of Columbia, sitting by designation.

Decisions of the United States Customs Court

United States Customs Court

One Federal Plaza
New York, N.Y. 10007

Chief Judge

Edward D. Re

Judges

Paul P. Rao
Morgan Ford
Scovel Richardson
Frederick Landis
James L. Watson
Herbert N. Maletz
Bernard Newman
Nils A. Boe

Senior Judge

Samuel M. Rosenstein

Clerk

Joseph E. Lombardi

Customs Decision

(C.D. 4843)

IDEAL MUSICAL MERCHANDISE CO., A DIVISION OF IDEAL INSTRUMENT CO., INC., PLAINTIFF *v.* UNITED STATES, DEFENDANT

Horse Tail Hair—Bow Hair

Court No. 75-8-02145

PROCESSING—HORSEHAIR—BOW HAIR

In a contest as to whether imported merchandise is horsehair or bow hair, the extent of the processing the merchandise has undergone is the critical factor. Where the facts adduced at trial clearly demonstrate the merchandise may be used as is, or has been sig-

nificantly processed, as the facts in this case do show, the merchandise must be classified as bow hair. *United States* v. *J. Gerber & Co., Inc., et al.*, 58 CCPA 110, C.A.D. 1013, 436 F. 2d 1390 (1971); *B. Feder* v. *United States*, 58 Cust. Ct. 223, C.D. 2946 (1967).

PROCESSING—HORSEHAIR—BOW HAIR

Where imported horsehair has been double drawn, weighed, bundled, washed, sterilized, fumigated and graded, as appearing in the case here, that importation must be classified as bow hair.

[Judgment for defendant.]

(Decided February 13, 1980)

Freundlich, Schwartz & Weinraub (*Milton J. Freundlich* at the trial; *Jeffrey A. Loeb* with him on the brief) for the plaintiff.

Alice Daniel, Assistant Attorney General; *Joseph I. Liebman*, Attorney in Charge, Field Office for Customs Litigation (*Sidney H. Kuflik* at the trial and on the brief), for the defendant.

LANDIS, Judge: The question presented in this case is whether the imported merchandise invoiced as "double-drawn horse tail hair"[1] should be classified as "Bow hair" under Tarrif Schedules of The United States (TSUS) item 726.20 or as "Other * * *" hair under TSUS item 186.55. There is a significant difference in the tariff rates for if plaintiff's claim is upheld the merchandise is properly entered free of duty.

Plaintiff claims the proper classification is under TSUS item 186.55, to wit:

SCHEDULE 1. – ANIMAL AND VEGETABLE PRODUCTS

* * * * * * *

PART 15. – OTHER ANIMAL AND VEGETABLE PRODUCTS

* * * * * * *

Subpart D. – Feathers, Downs, Bristles and Hair

* * * * * * *

Hair, and fur removed from the skin, not specially provided for, crude, sorted, treated, dyed, or otherwise processed but not made up into articles:

* * * * * * *

Other

186.55	Crude, sorted, treated, or both sorted and treated, but not otherwise processed	Free

Defendant urges that the Customs Service's classification is correct. TSUS item 726.20, under schedule 7, part 3, subpart B, reads "Bow

[1] "Drawn" hair refers to that sorted precisely as to length.

hair." Since the country of exportation is the People's Republic of China, the rates of duty prescribed by the tariff schedules, column 2, apply. General headnote 3(e), "Products of Communist Countries." Thus the ad valorem rate of duty under TSUS item 726.20 is 40 percent.

The issue in this case, simply stated, is whether the imported bulk horsehair has been sufficiently processed to be classified as violin bow hair. On the basis of the testimony adduced at trial, I uphold the defendant's contention and sustain the classification previously made by the Customs Service.

As the decision in this case is dependent on the testimony of the witnesses, the evidence given by the witnesses should be reviewed.

The testimony consisted of two witnesses for the plaintiff and one for the defendant.

Plaintiff's first witness was Mr. Jack Loeb, the president of the plaintiff corporation, Ideal Musical Merchandise Co. He testified he had been in the musical merchandise business since 1945, that he had been involved in all facets of the music industry (r. 8), and that while he has seen horsehair processed into bow hair (r. 13), he had never personally restrung a bow (r. 43). Mr. Loeb described how the horsehair is processed into bow hair, as follows:

> First of all, the hair has to be combed. The short hairs have to be removed from the bundle. It has to be washed, it has to be separated into specific measurements, and it has to be washed in order to prepare it to be used as a violin bow (r. 13).

It is undisputed that the importation in issue is bulk hair, although the plaintiff also introduced coiled hanks of violin bow hair. Mr. Loeb reiterated how the bulk hair is transformed into the hanks:

> As I stated before, this hair, when it comes in this condition, this horse tail hair, has to be separated, the short hairs have to be removed, it has to be combed, washed, and waxed. The ends have to be waxed in order to prepare it. As you notice, the wax tip on the end of the coil of the bow has been—this has been already processed for use on a violin bow, or cello bow, or viola bow, or any bow used for a stringed instrument (r. 17).

Under cross-examination, Mr. Loeb conceded that in some of the catalogs introduced by plaintiff into evidence, bulk horsehair as well as hanks was listed under the category "bow hair" (r. 53, 56). Also on cross-examination, the witness stated that the imported merchandise had not been processed at all (r. 59); yet he admitted that the merchandise was double-drawn, weighed, and bundled for purposes of sale, washed, sterilized, and fumigated (r. 59–60). Mr. Loeb stated he did not know whether the bulk hair had been graded as to color (r. 61). However, in clear contradiction to this, as defendant's

counsel pointed out, in response to interrogatories this witness had previously stated the merchandise had been graded as to color. The interchange proceeded as follows:

> Q. Do you know if it has been graded as to color?
>
> A. No. All I know is that it has been fumigated in order to comply with U.S. Customs requirements.
>
> Q. I would like to show you plaintiff's response to interrogatory 5, which defendant propounded to plaintiff. The question in interrogatory 5.(a) says: "Describe fully the processing the subject merchandise underwent from the time it was removed from the horse in order to place it in its condition as imported."
>
> And you state: "Ans.: Unknown to plaintiff in detail except that it was (1) double drawn, (2) weighed and bundled, (3) sterilized or fumigated, and (4) graded as to color."
>
> A. Well, it is possible. I don't remember that, but it is possible. I know that this has been weighed and bundled because that is the way it is sold.
>
> JUDGE LANDIS: When the witness says "this," he is referring to plaintiff's exhibit 2 (r. 61).

Mr. Loeb also testified as to what remained to be done to the importation to transform it into bow hair:

> It has to be processed. It has to undergo additional washing, it has to undergo additional sorting, the short hairs have to be removed, the black hairs have to be removed, it has to be treated, it has to be measured, it has to be tied, and it has to be waxed, and then it becomes bow hair, ready to be used in violin bows (r. 71–72).

Plaintiff's second witness was Mr. John Sipko, an employee of the plaintiff corporation. Mr. Sipko works with all musical string instruments, adjusting and repairing them (r. 88, 89), and has done so for over 40 years (r. 89). He repairs bows for professional musicians (r. 92). Mr. Sipko has rehaired many thousands of bows (r. 101).

To the question of whether the importation could be used immediately in a bow, Mr. Sipko answered: "For better bow I have to select it" (r. 90). Subsequently, he enumerated the other processes the bulk hair would have to undergo to be used as bow hair—combing four or five times, tieing, and then burning the end (r. 90–91), and possibly waxing the end (r. 92–93).

On cross-examination, Mr. Sipko explained that the hanks of hair would have to undergo the same processes as the bulk hair in order to be used as bow hair (r. 97–98). On redirect, the witness appeared to testify that the hanks of hair could be used as bow hair without much further processing—but his testimony was not that clear (r. 99). On recross, he stated that there was "not a big difference" in the processing of hanks and bow hair, but again his testimony was uncertain (r. 101–102).

The most persuasive witness was defendant's, Mr. David Renard. Mr. Renard served as head repairer of old instruments, which included responsibility for rehairing and restringing of bows for 20 to 25 years, at the firm of Luthier Rosenthal & Son (r. 104). He had been stringing bows with bow hair since he was about 9 years old. He estimated that he had rehaired some 6,000 to 8,000 bows (r. 104). Mr. Renard has strung bows for many philharmonic men and persons such as Jascha Heifetz, Mischa Elman, and John Corigliano (r. 104–105). Mr. Renard has imported bow hair similar to the importation at bar (r. 105).

Mr. Renard explained how he would string a bow with the imported merchandise (r. 105–106). Significantly, Mr. Renard testified that he would string the hanks of hair just as he would the bulk hair:

> Well, it would be the same way; without taking them off the large bulk. It is the same thing actually, except it is a smaller quantity. It still has to be done over as far as sorting them out, taking out the short hairs and dark hairs and things (r. 106).

In response to a hypothetical question, whether he would charge a higher price for using the bulk hair or hanks, assuming the same amount of hair was used from each, Mr. Renard responded that there would not be a difference in price (r. 110). He added that as far as time was concerned, one might need more time in stringing a bow from hanks than from the bulk (r. 110). I find the following interchange on direct examination also significant:

> Q. Now, if you or I were to cut hair directly from a horse and give it to you, would you be able to place that on a bow?
> A. No.
> Q. But you could use plaintiff's exhibit 2 to string a bow?
> A. Definitely (r. 110).

The most important query and response went as follows:

> Q. In your opinion, does the subject merchandise need any further processing to be considered bow hair? That is, plaintiff's exhibit 2?
> A. No; it is usable the way it is (r. 111).

Mr. Renard, who was the most credentialed witness, straightforwardly testified that the imported merchandise is bow hair. He stated that the coils of horsehair introduced, which both sides agree is bow hair, would be strung on a bow just as the bulk hair.

On balance, the testimony is heavily weighted in favor of the defendant's position. Of course, as defendant's brief contends, there is a presumption in favor of the Customs Service's classification.

Plaintiff's arguments are unavailing. Plaintiff has argued that the bulk hair is not sufficiently processed to be used as bow hair. Yet defendant's witness, Mr. Renard, specifically testified that the merchandise could be used as is, and plaintiff's witness, Mr. Sipko, seemed

to concede the point. Only witness Loeb, who had never restrung a bow, felt that more processing was mandatory.

Plaintiff also argued that only coiled hanks of horsehair, not bulk hair, are used to restring bows. However, the very catalogs introduced by plaintiff demonstrated that bulk hair, as well as coiled hanks, may be categorized as bow hair. Indeed, defendant's witness testified that he preferred restringing with bulk hair.

Finally, plaintiff relies on *B. Feder* v. *United States*, 58 Cust. Ct. 223, C.D. 2946 (1967). In *Feder*, the proper classification of silver-grey horse tail hair was in issue. The merchandise was classified under paragraph 1541(a) of the Tariff Act of 1930, as modified by the Torquay Protocol to the General Agreement on Tariffs and Trade, T.D. 52739, as "Violin bow hair." Plaintiff urged classification under paragraph 1688 of the 1930 Tariff Act, as "Hair of horse * * * cleaned or uncleaned, drawn or undrawn, but unmanufactured, not specially provided for." The Court sustained the plaintiff's protest. However, the facts are clearly distinguishable from those at bar.

As here, both sides agreed that the importation was horsehair. The issue in *Feder* was "whether, at the time of importation, the horsehair in question had been advanced in condition sufficiently to be considered as violin bow hair as classified or whether the imported horsehair is 'Hair of horse * * * unmanufactured.' " *Feder*, 224. The testimony of record in *Feder* established that the merchandise was covered with kerosene, that approximately 40 percent of the hair consisted of off-color material, dead hair, and hair of improper lengths. In our case, the merchandise was not covered with kerosene, had been double drawn, and only about 5 percent would not be usable as bow hair (r. 111).

> Each case must be decided on the facts of record therein. In the instant case, the merchandise represented by plaintiff's exhibit 1 (the importation) is not violin bow hair in the condition as imported. The imperfections therein are many and include various colors, sizes, dirt, and kerosene. Horsehair in that condition is not usable as violin bow hair without extensive processing [58 Cust. Ct., 226–227].

As I have noted, the weight of the testimony here is precisely the reverse. *See United States* v. *J. Gerber & Co., Inc., et al.*, 58 CCPA 110, C.A.D. 1013, 436 F. 2d 1390 (1971); *B. Feder* v. *United States*, 58 Cust. Ct. 223, C.D. 2946 (1967).

Furthermore, the plaintiff has failed to carry its dual burden of proof. Plaintiff must not only show that the Customs Service's classification is erroneous, but must also demonstrate the correctness of the claimed classification. *United States* v. *New York Merchandise Co., Inc.*, 58 CCPA 53, C.A.D. 1004, 435 F. 2d 1315 (1970). Plaintiff's claimed classification, TSUS item 186.55, is set out supra. The critical lan-

guage is: "Hair * * * Crude, sorted, treated, or both sorted and treated, but not otherwise processed." Even plaintiff's chief witness, Mr. Jack Loeb, testified that the imported merchandise had been otherwise processed before entry (r. 60). Thus, TSUS item 186.55 would be an improper classification according to plaintiff's own witness.

Finally, plaintiff's exhibits 12–A and 12–B for identification are deemed irrelevant. They were admitted only as illustrative exhibits (r. 39, 81–82), and while this action by the court was proper, nevertheless, as defendant states in its brief:

> * * * even if these exhibits had been admitted for other than illustrative purposes they are totally immaterial and irrelevant with respect to the instant action. Whereas the instant merchandise was exported from the People's Republic of China into the United States in 1974, plaintiff's exhibits 12 A and B for identification originated from Japan and were imported into this country in 1978. The classification by the Customs Service of the imported hair is a separate and distinct action from any other entries subsequently imported * * * (defendant's brief, 27).

For all these reasons, I find for the defendant and uphold the classification of the Customs Service.

Judgment for the defendant will enter accordingly.

Decisions of the United States Customs Court

Abstracts

Abstracted Protest Decisions

DEPARTMENT OF THE TREASURY, *February 19, 1980*

The following abstracts of decisions of the United States Customs Court at New York are published for the information and guidance of officers of the customs and others concerned. Although the decisions are not of sufficient general interest to print in full, the summary herein given will be of assistance to customs officials in easily locating cases and tracing important facts.

ROBERT E. CHASEN,
Commissioner of Customs.

DECISION NUMBER	JUDGE & DATE OF DECISION	PLAINTIFF	COURT NO.	ASSESSED	HELD	BASIS	PORT OF ENTRY AND MERCHANDISE
				Par. or Item No. and Rate	Par. or Item No. and Rate		
P80/25	Ford, J. February 11, 1980	International Importers, Inc.	67/62025	Item 684.70 15%	Item 685.22 12.5%	Judgment on the pleadings	Chicago Radio earphones, not headphones
P80/26	Ford, J. February 11, 1980	Nomura (America) Corp.	65/18040	Par. 353 15%	Par. 353 13.75%	Judgment on the pleadings	New York Earphones having an essential electrical featuref

P80/27	Ford, J. February 11, 1980	RCA Corporation	72-12-02543, etc.	Item. 684.70 10% or 9%	Item 685.25 8.5% or 7%	Judgment on the pleadings	Los Angeles-Long Beach Radio earphones, not headphones
P80/28	Ford, J. February 11, 1980	Karl Schroff & Assoc., Inc.	67/31968	Item 684.70 15%	Item 685.22 12.5%	Judgment on the pleadings	San Francisco Radio earphones, not headphones
P80/29	Maletz, J. February 13, 1980	Mim Lador, Inc.	78-10-01859	Item 737.80 22%	Item 725.50 8%	Amico, Inc. v. U.S. (C.A.D. 1214)	New York Music boxes

Decisions of the United States Customs Court

Abstracts

Abstracted Reappraisement Decisions

DECISION NUMBER	JUDGE & DATE OF DECISION	PLAINTIFF	COURT NO.	BASIS OF VALUATION	HELD VALUE	BASIS	PORT OF ENTRY AND MERCHANDISE
R80/9	Rao, J. February 13, 1980	Imported Rug Associates, Ltd.	R62/11260, etc.	Export value	F.o.b. unit invoice prices plus 20% difference between f.o.b. unit invoice prices and appraised values	Agreed statement of facts	New York Rugs
R80/10	Rao, J. February 13, 1980	Imported Rug Associates, Ltd.	R65/5475, etc.	Export value	F.o.b. unit invoice prices plus 20% of difference between f.o.b. unit invoice prices and appraised values	Agreed statement of facts	New York Rugs
R80/11	Rao, J. February 14, 1980	Manhattan Novelty Corp.	R59/1023, etc.	Export value	F.o.b. unit invoice prices plus 20% of difference between f.o.b. unit invoice prices and appraised values	Agreed statement of facts	New York Binoculars

R80/12	Rao, J. Feburary 14, 1980	Selsi Co., Inc.	263158-A, etc.	Export value	F.o.b. unit invoice prices plus 20% of difference between f.o.b. unit invoice prices and appraised values	Agreed statement of facts	New York Binoculars
R80/13	Rao, J. February 14, 1980	Selsi Co., Inc.	289216-A, etc.	Export value	F.o.b. unit invoice prices plus 20% of difference between f.o.b. unit invoice prices and appraised values	Agreed statement of facts	New York Binoculars
R80/14	Rao, J. February 14, 1980	Selsi Co., Inc.	R58/14402, etc.	Export value	F.o.b. unit invoice prices plus 20% of difference between f.o.b. unit invoice prices and appraised values	Agreed statement of facts	New York Binoculars
R80/15	Rao, J. February 14, 1980	Selsi Co., Inc.	R58/26525, etc.	Export value	F.o.b. unit invoice prices plus 20% of difference between f.o.b. unit invoice prices and appraised values	Agreed statement of facts	New York Binoculars
R80/16	Rao, J. February 14, 1980	Selsi Co., Inc.	R59/5264, etc.	Export value	F.o.b. unit invoice prices plus 20% of difference between f.o.b. unit invoice prices and appraised values	Agreed statement of facts	New York Binoculars
R80/17	Rao, J. February 14, 1980	Selsi Co., Inc.	R61/6788, etc.	Export value	F.o.b. unit invoice prices plus 20% of difference between f.o.b. unit invoice prices and appraised values	Agreed statement of facts	New York Binoculars

Appeals to U.S. Court of Customs and Patent Appeals

APPEAL 80-16.—Atkins Kroll & Co., Ltd.* *v.* United States.—CARBON STEEL BARS AND BARS-SHAPES—LTFV AND INJURY DETERMINATIONS—DUMPING DUTIES—ANTIDUMPING ACT. Appeal from C.D. 4821, rehearing denied December 5, 1979.

The issue in this case relates to the imposition of any dumping duties on the involved carbon steel bars and bars-shapes under the Antidumping Act of 1921, as amended.

Plaintiff's complaint challenged the Secretary of the Treasury's determination that the merchandise in question was being, or was likely to be, sold at less than fair value (LTFV) and the Tariff Commission's determination that an industry in the United States was being injured by reason of the importation into the United States of the involved merchandise on a number of grounds.

It was the opinion of the Customs Court that plaintiff-appellant, at the trial, abandoned all but one of its contentions directed to the Secretary's LTFV determination, but its brief dealt exclusively with the LTFV issues which plaintiff expressly abandoned at the trial; plaintiff did not explicitly address itself, at the trial or in its brief, to the remaining pleading issues relating to the Commission's injury determination. Accordingly, the court determined that plaintiff would not be permitted to resurrect issues it abandoned at the trial, and its abandonment of the sole issue tendered for trial necessitated dismissal of the action for failure of proof—the regularity of the LTFV and injury determinations being presumed in the absence of evidence to the contrary.

It is claimed that the Customs Court erred in finding and holding that plaintiff's briefs dealt exclusively with LTFV issues which plaintiff had abandoned at trial; in finding and holding that plaintiff abandoned all LTFV issues other than the de minimis issue; in finding and holding that the issues raised in plaintiff's briefs were not properly before the court for determination; in finding and holding that none of the unabandoned allegations in plaintiff's complaint permitted

*Also referred to as Atkins Kroll & Co., Inc., by the parties.

plaintiff to raise the issues in its briefs; in not holding that the court's ruling at trial regarding allegation 11 of plaintiff's complaint was susceptible to interpretation that would permit plaintiff to challenge all issues concerning the Secretary's dumping finding other than those specific points set forth in allegations 20–23 of plaintiff's complaint; in not holding that the complaint should be liberally construed so as to permit plaintiff to challenge the constitutionality of the Tariff Commission's voting procedure; in failing to set aside the court's decision dated September 10, 1979, as reported in C.D. 4821; in failing to resubmit the case to the court for a decision, pursuant to plaintiff's motion of October 10, 1979, for a rehearing or a retrial; in failing to grant plaintiff's alternative relief for a retrial, as requested in plaintiff's motion of October 10, 1979, for a rehearing or a retrial; in failing to address the merits of the arguments set forth in plaintiff's briefs.

APPEAL 80–17.—Border Brokerage Co., Inc. *v.* United States.—STEEL REINFORCING BARS—LTFV AND INJURY DETERMINATIONS—DUMPING DUTIES—ANTIDUMPING ACT. Appeal from C.D. 4825, rehearing denied December 7, 1979.

The issue in this case relates to the imposition of dumping duties on the involved steel reinforcing bars under the Antidumping Act of 1921, as amended.

Plaintiff's complaint challenged the Secretary of the Treasury's determination that the merchandise in question was being, or was likely to be, sold at less than fair value (LTFV) and the Tariff Commission's determination that an industry in the United States was likely to be injured by reason of the importation into the United States of the involved merchandise on certain grounds. At the trial plaintiff stated it intended "to submit these cases wholly on documentary evidence, on a wholly documentary record, using the official records on the investigations by the Secretary of the Treasury and Tariff Commission as supporting evidence for claims that the Secretary and the Commission failed to properly interpret and apply the laws and regulations governing the less than fair value determination and the injury or likelihood of injury determination." In its brief, plaintiff contended that the provision of section 201(a) of the Antidumping Act of 1921, as amended, which allows the Commission to make a finding of likelihood of injury upon a divided vote of the commissioners voting, as in this case, is in violation of parliamentary law, the rules of Congress, the 10th amendment to the Federal Constitution, the due process clauses of the 5th and 14th amendments to the Federal Constitution, fundamental rights, and the concept of ordered liberty.

The Customs Court concluded that the matters discussed in plaintiff's brief were wholly outside of the parameters of the pleadings and, as such, were not properly before the court, and since plaintiff had in effect abandoned its claims as pleaded, the regularity of the challenged administrative determinations are presumed, the court not being persuaded of the existence of evidence in the record to the contrary. The action was dismissed for failure of proof.

It is claimed that the Customs Court erred in finding and holding that the matters raised in plaintiff's briefs were not connected with the allegations in the complaint but were wholly outside the parameters of the pleadings; in finding and holding that none of the unabandoned allegations in plaintiff's complaint permitted plaintiff to raise the issues in its briefs; in finding and holding that the due process arguments in plaintiff's briefs were not addressed to evidentiary matters or to the underlying administrative record; in not finding that plaintiff was not required to specifically plead to the constitutional issues because the statute defining the voting procedure of the Tariff Commission was unconstitutional on its face; in not holding that the complaint should be liberally construed so as to permit plaintiff to challenge the constitutionality of the Tariff Commission's voting procedure; in failing to set aside the court's decision dated October 11, 1979, as reported in C.D. 4825; in failing to resubmit the case to the court for a decision, pursuant to plaintiff's motion of November 13, 1979, for a rehearing or retrial; in failing to grant plaintiff's alternative relief for a retrial, as prayed in plaintiff's motion of November 13, 1979, for a rehearing or retrial; in failing to address the merits of the arguments set forth in plaintiff's briefs.

Recent Unpublished Customs Service Decisions

The following listing of recent administrative decisions issued by the Office of Regulations and Rulings, U.S. Customs Service, and not otherwise published, is published for the information of Customs officers and the importing community. Although the decisions are not of sufficient general interest to warrant publication as Treasury decisions, the listing describes the issues involved and is intended to aid Customs officers and concerned members of the public in identifying matters of interest which recently have been considered by the Office of Regulations and Rulings.

A copy of any decision included in this listing, identified by its date and file number, may be obtained in a form appropriate for public distribution upon written request to the Office of Regulations and Rulings, attention: Legal Reference Area, room 2404, U.S. Customs Service, 1301 Constitution Avenue NW., Washington, D.C. 20229. These copies will be made available at a cost to the requester of 10 cents per page. However, the Customs Service will waive this charge if the total number of pages copied is 10 or less.

Decisions listed in earlier issues of the CUSTOMS BULLETIN, through October 24, 1979, are available in microfiche format at a cost of $15.10 (15 cents per sheet of fiche). It is anticipated that additions to the microfiche will be made quarterly and subscriptions are available. Requests for the microfiche now available and for subscriptions should be directed to the Legal Reference Area. Subscribers will automatically receive updates as they are issued and will be billed accordingly.

Dated: February 25, 1980.

JOHN T. ROTH,
Acting Director,
Office of Regulations and Rulings.

Date of decision	File No.	Issue
1-25-80	104392	Carrier control: Whether certain crusie itineraries of a foreign vessel are violative of the coastwise laws

Date of decision	File no.	Issue
1-25-80	104412	Carrier control: Whether a foreign vessel may land passengers from abroad in Puerto Rico and remain in port for 2 days without violating the coastwise laws
8- 3-79	541968	Valuation: Whether certain inland freight charges incurred in the country of exportation form part of the dutiable value of imported merchandise
9-20-79	552005	Valuation: Use of the Japanese commodity tax in determining the foreign market value of Japanese televisions
2- 6-80	712253	Liquidation: Courtesy notice of liquidation
1-29-80	057884	Classification: Handblown glass miniatures (737.15, 737.95)
11-30-79	060438	Classification: Polyethylene sheeting (389.62, 774.60)
8- 2-79	061156	Valuation: Dutiable status of research and development costs incurred in the manufacture of printed circuit boards
8-13-79	061373	Valuation: Whether an amount paid to a commissionarie by the importer is a bona fide buying commission
9-11-79	061463	Valuation: Whether certain transactions between an importer and related exporter constitute bona fide sales
1- 8-80	061543	Valuation: Whether certain titanium sponge should be appraised under export value utilizing the contract price for the shipment or a higher price in effect at the time of exportation
1-31-80	061802	Classification: Whether a textile label on wearing apparel constitutes ornamentation
1-31-80	062853	Classification: Laminated textile fabrics (355.81, 355.82, 774.55)

International Trade Commission Notices

Investigations by the U.S. International Trade Commission

DEPARTMENT OF THE TREASURY

The appended notices relating to investigations by the U.S. International Trade Commission are published for the information of Customs officers and others concerned.

R. E. CHASEN,
Commissioner of Customs.

In the Matter of CERTAIN APPARATUS FOR THE CONTINUOUS PRODUCTION OF COPPER ROD	Investigation No. 337-TA-52

Notice of Publication of Memorandum Regarding Krupp's Request for an Advisory Opinion

On February 14, 1980, the U.S. International Trade Commission published a memorandum regarding the Krupp request for an advisory opinion of December 17, 1979. Public comment had previously been sought regarding Krupp's request. See 45 F.R. 1950 (January 9, 1980). Copies of the memorandum are available at the Office of the Secretary, U.S. International Trade Commission, 701 E Street NW., Washington, D.C. 20436; telephone 202-523-0161.

By order of the Commission.

Issued: February 14, 1980.

KENNETH R. MASON,
Secretary.

Inv. Nos. 701-TA-22 thru 701-TA-51 (Final)

Notice of Institution of Countervailing Duty Investigations and Scheduling of Hearings in Cases in Which Countervailing Duties Have Been Waived or Published After July 26, 1979

AGENCY: U.S. International Trade Commission.

ACTION: Institution of 30 countervailing duty investigations to determine whether with respect to the articles involved an industry in the United States is materially injured, or is threatened with material injury, or the establishment of an industry in the United States is materially retarded, by reason of subsidized imported merchandise.

EFFECTIVE DATE: February 5, 1980.

FOR FURTHER INFORMATION CONTACT: The senior supervisory investigator assigned by the Commission to the particular investigation for which the information is sought. The assignments of senior supervisory investigators and their telephone numbers at the Commission are designated below.

SUPPLEMENTARY INFORMATION: The Trade Agreements Act of 1979, section 104(a), requires the Commission to conduct countervailing duty investigations in cases where the Commission has received the most current net subsidy information pertaining to any countervailing duty order in effect on January 1, 1980, which had been waived pursuant to section 303(d) of the Tariff Act or on certain duties published after July 26, 1979. On February 5, 1980, the Commission received such information. Accordingly, the Commission hereby gives notice that it is instituting the following investigations pursuant to section 705 of the Tariff Act of 1930, as added by title I of the Trade Agreements Act of 1979. These investigations will be subject to the provisions of part 207 of the Commission's Rules of Practice and Procedure (19 CFR 207, 44 F.R. 76457) and, particularly, subpart C thereof, effective January 1, 1980.

Written submissions.—Any person may submit to the Commission on or before the prehearing statement due date specified below for the relevant investigation a written statement of information pertinent to the subject matter of the investigation. A signed original and nineteen true copies of such statements must be submitted.

Any business information which a submitter desires the Commission to treat as confidential shall be submitted separately and each sheet must be clearly marked at the top "Confidential Business Data." Confidential submissions must conform with the requirements of section 201.6 of the Commission's Rules of Practice and Procedure (19 CFR 201.6). All written submissions, except for confidential business data, will be available for public inspection.

Hearings.—The Commission has scheduled a hearing in each investigation on the date specified below. All hearings will be held in the Commission's hearing room, U.S. International Trade Commission Building, 701 E Street NW., Washington, D.C. 20436, beginning at 10 a.m., e.s.t., on the dates indicated in the attachment. A report

containing preliminary findings of fact prepared by the Commission's professional staff will be made available to all interested persons prior to the hearing. Any person's prehearing statement must be filed on or before the indicated date. All parties that desire to appear at the hearing and make oral presentations must file prehearing statements. For further information consult the Commission's Rules of Practice and Procedure, part 207, subpart C (44 F.R. 76457), effective January 1, 1980.

COUNTERVAILING DUTY INVESTIGATIONS IN CASES IN WHICH COUNTERVAILING DUTIES HAVE BEEN WAIVED OR PUBLISHED AFTER JULY 26, 1979

Invoice No.	Product/country	Prehearing report to parties	Deadline for prehearing statements from parties	Hearing date	Hearing location	Contact person
701-TA-22 (final) [1]	Dextrines and soluble or chemically treated starches derived from potato starch, provided for in TSUS item 493.30/Belgium.	Mar. 21, 1980	Apr. 7, 1980	Apr. 9, 1980	ITC Bldg., Washington, D.C.	John MacHatton, 523-0439.
701-TA-23 (final) [1]	Destrines and soluble or chemically treated starches derived from potato starch, provided for in TSUS item 493.30/Denmark.	do	do	do	do	Do.
701-TA-24 (final) [1]	Dextrines and soluble or chemically treated starches derived from potato starch, provided for in TSUS item 493.30/Federal Republic of Germany.	do	do	do	do	Do.
701-TA-25 (final) [1]	Dextrines and soluble or chemically treated starches derived from potato starch, provided for in TSUS item 493.30/France.	do	do	do	do	Do.
701-TA-26 (final) [1]	Dextrines and soluble or chemically treated starches derived from potato starch, provided for in TSUS item 493.30/Ireland.	do	do	do	do	Do.
701-TA-27 (final) [1]	Dextrines and soluble or chemically treated starches derived from potato starch, provided for in TSUS item 493.30/Italy.	do	do	do	do	Do.
701-TA-28 (final) [1]	Dextrines and soluble or chemically treated starches derived from potato starch, provided for in TSUS item 493.30/Luxembourg.	do	do	do	do	Do.
701-TA-29 (final) [1]	Dextrines and soluble or chemically treated starches derived from potato starch, provided for in TSUS item 493.30/Netherlands.	do	do	do	do	Do.
701-TA-30 (final) [1]	Dextrines and soluble or chemically treated starches derived from potato starch, provided for in TSUS item 493.30/United Kingdom.	do	do	do	do	Do.
701-TA-31 (final)	Hams and pork shoulders, cooked and packed in airtight containers, provided for in TSUS items 107.30 and 107.35/Belgium.	May 13, 1980	May 28, 1980	June 4, 1980	do	Vera Libeau, 523-0368.
701-TA-32 (final)	Hams and pork shoulders, cooked and packed in airtight containers, provided for in TSUS items 107.30 and 107.35/Denmark.	do	do	do	do	Do.

701-TA-33 (final)	Hams and pork shoulders, cooked and packed in airtight containers, provided for in TSUS items 107.30 and 107.35/Federal Republic of Germany.	do	do	do	do	Do.
701-TA-34 (final)	Hams and pork shoulders, cooked and packed in airtight containers, provided for in TSUS items 107.30 and 107.35/France.	do	do	do	do	Do.
701-TA-35 (final)	Hams and pork shoulders, cooked and packed in airtight containers, provided for in TSUS items 107.30 and 107.35/Ireland.	do	do	do	do	Do.
701-TA-36 (final)	Hams and pork shoulders, cooked and packed in airtight containers, provided for in TSUS items 107.30 and 107.35/Italy.	do	do	do	do	Do.
701-TA-37 (final)	Hams and pork shoulders, cooked and packed in airtight containers, provided for in TSUS items 107.30 and 107.35/Luxembourg.	do	do	do	do	Do.
701-TA-38 (final)	Hams and pork shoulders, cooked and packed in airtight containers, provided for in TSUS items 107.30 and 107.35/Netherlands.	do	do	do	do	Do.
701-TA-39 (final)	Hams and pork shoulders, cooked and packed in airtight containers, provided for in TSUS items 107.30 and 107.35/United Kingdom.	do	do	do	do	Do.
701-TA-40 (Final)	Fish, fresh, chilled, or frozen, whether or not whole, but not otherwise prepared or preserved, provided for in TSUS items 110.35, 110.50, and 110.55/Canada.	Apr. 1, 1980	Apr. 16, 1980	Apr. 21, 1980	do	John MacHatton, 523-0439.
701-TA-41 (final)	Handbags of leather, provided for in TSUS items 706.07 and 706.09/Brazil.	Apr. 8, 1980	Apr. 23, 1980	Apr. 28, 1980	do	Bruce Cates, 523-0368.
701-TA-42 (final)	Tomatoes (whether or not reduced in size), packed in salt, in brine, pickled, or otherwise prepared or preserved, provided for in TSUS items 141.65 and 141.66/Belgium.	Apr. 17, 1980	May 2, 1980	May 9, 1980	do	Robert Eninger. 523-0312.
701-TA-43 (final)	Tomatoes (whether or not reduced in size), packed in salt, in brine, pickled, or otherwise prepared or preserved, provided for in TSUS items 141.65 and 141.66/Denmark.	do	do	do	do	Do.
701-TA-44 (final)	Tomatoes (whether or not reduced in size), packed in salt, in brine, pickled, or otherwise prepared or preserved, provided for in TSUS items 141.65 and 141.66/Federal Republic of Germany.	do	do	do	do	Do.
701-TA-45 (final)	Tomatoes (whether or not reduced in size), packed in salt, in brine, pickled, or otherwise prepared or preserved, provided for in TSUS items 141.65 and 141.66/France.	do	do	do	do	Do.

COUNTERVAILING DUTY INVESTIGATIONS IN CASES IN WHICH COUNTERVAILING DUTIES HAVE BEEN WAIVED OR PUBLISHED AFTER JULY 26, 1979—Continued

Invoice No.	Product/country	Prehearing report to parties	Deadline for prehearing statements from parties	Hearing date	Hearing location	Contact person
701-TA-46 (final)	Tomatoes (whether or not reduced in size), packed in salt, in brine, pickled, or otherwise prepared or preserved, provided for in TSUS items 141.65 and 141.66/Ireland.	do	do	do	do	Do.
701-TA-47 (final)	Tomatoes (whether or not reduced in size), packed in salt, in brine, pickled, or otherwise prepared or preserved, provided for in TSUS items 141.65 and 141.66/Italy.	do	do	do	do	Do.
701-TA-48 (final)	Tomatoes (whether or not reduced in size), packed in salt, in brine, pickled, or otherwise prepared or preserved, provided for in TSUS items 141.65 and 141.66/Luxembourg.	do	do	do	do	Do.
701-TA-49 (final)	Tomatoes (whether or not reduced in size) packed in salt, in brine, pickled, or otherwise prepared or preserved, provided for in TSUS items 141.65 and 141.66/Netherlands.	do	do	do	do	Do.
701-TA-50 (final)	Tomatoes (whether or not reduced in size), packed in salt, in brine, pickled, or otherwise prepared or preserved, provided for in TSUS items 141.65 and 141.66/United Kingdom.	do	do	do	do	Do.
701-TA-51 (final)	Butter cookies provided for in TSUS item 182.20/Denmark	Apr. 24, 1980	May 9, 1980	May 16, 1980	do	Daniel Leahy 523-1369.

[1] This investigation is being consolidated for purposes of the hearing with the investigation involving corn starch from the same country.

By order of the Commission.
Issued: February 14, 1980.

KENNETH R. MASON,
Secretary.

In the Matter of CERTAIN POULTRY DISK-PICKING MACHINES AND COMPONENTS THEREOF	Investigation No. 337-TA-78

Notice of Investigation

Notice is hereby given that a complaint was filed with the U.S. International Trade Commission on January 8, 1980, and amended January 21, 1980, under section 337 of the Tariff Act of 1930 (19 U.S.C. 1337), on behalf of Stork-Gamco, Inc., Airport Parkway SW., P.O. Box 1258, Gainesville, Ga. 30501, alleging that unfair methods of competition and unfair acts exist in the importation into the United States of certain poultry disk-picking machines, or in their sale, because such poultry disk-picking machines are allegedly covered by claims 3, 6, and 8 of U.S. Letters Patent 3,197,809. The complaint alleges that the effect or tendency of the unfair methods of competition and unfair acts is to destroy or substantially injure an industry, efficiently and economically operated, in the United States.

Complainant requests that, after a full investigation has been conducted, exclusion of the imports in question and such other and further relief as the Commission deems appropriate be ordered by the Commission.

Having considered the complaint, the Commission, on February 5, 1980, ORDERED THAT—

(1) Pursuant to subsection (b) of section 337 of the Tariff Act of 1930 (19 U.S.C. 1337), an investigation be instituted to determine whether there is a violation of subsection (a) of this section in the unauthorized importation of certain poultry disk-picking machines, and components thereof, into the United States, or in their sale, because of the alleged infringement by such poultry disk-picking machines of claims 3, 6, and 8 of U.S. Letters Patent No. 3,197,809, the effect of tendency of which is to destroy or substantially injure an industry, efficiently and economically operated, in the United States.

(2) For the purpose of this investigation so instituted, the following are hereby named as parties upon which this notice of investigation shall be served:

(a) The complainant is—

Stork-Gamco, Inc.
Airport Parkway SW.
P.O. Box 1258
Gainesville, Ga. 30501

(b) The respondents are the following companies alleged to be engaged in the unauthorized importation of certain poultry disk-picking machines or components thereof, into the United States, or in their sale, and are parties upon which the complaint is to be served:

(1) Meyn USA, Inc.
P.O. Box 627
Cornelia, Ga. 30531

(2) Machinefabriek Meyn B.V.
Postbus 16
Nordeinde 68
1510 AA Oostzaan
Holland

(c) David J. Dir, U.S. International Trade Commission, 701 E Street NW., Washington, D.C. 20436, is hereby named Commission investigative attorney, a party to this investigation; and

(3) For the investigation so instituted, Chief Administrative Law Judge Donald K, Duvall, U.S. International Trade Commission, 701 E Street NW., Washington, D.C. 20436, shall designate the presiding officer.

The phrase "and components thereof" has been added to paragraph (1) above on the basis of the informal investigative activities by the Commission investigative attorney which revealed that the poultry disk-picking machines of the type alleged to infringe claims 3, 6, and 8 of U.S. Letters Patent 3,197,809 have been and can be imported in component parts rather than entirely assembled.

Responses must be submitted by the named respondents in accordance with section 210.21 of the Commission's Rules of Practice and Procedure (19 CFR 210.21). Pursuant to section 201.16(d) and 210.21 (a) of the rules, such responses will be considered by the Commission if received not later than 20 days after the date of service of the complaint. Extensions of time for submitting a response will not be granted unless good and sufficient cause therefor is shown.

Failure of a respondent to file a timely response to each allegation in the complaint and in this notice may be deemed to constitute a waiver of the right to appear and contest the allegations of the complaint and this notice, and to authorize the presiding officer and the Commission, without further notice to the respondent, to find the facts to be as alleged in the complaint and this notice and to enter both a recommended determination and a final determination containing such findings.

The complaint is available for inspection by interested persons at the Office of the Secretary, U.S. International Trade Commission, 701 E Street NW., Washington, D.C. 20436, and in the Commission's New York City office, 6 World Trade Center, New York, N.Y. 10048.

By order of the Commission.

Issued: February 15, 1980.

KENNETH R. MASON,
Secretary.

---

19 CFR Part 200

Employee Responsibilities and Conduct

AGENCY: U.S. International Trade Commission.

ACTION: Notice of proposed rules.

SUMMARY: This notice proposes procedures for administrative enforcement of the restrictions on postemployment activity established by title V of the Ethics in Government Act of 1978, Public Law 95–521, 92 Stat. 1864 (18 U.S.C. 207) (as amended by Public Law 96–28, 93 Stat. 76 (1979)) with respect to former employees of the U.S. International Trade Commission.

DATE: Comments must be received on or before March 24, 1980.

ADDRESS: Interested persons may submit comments in writing to the Secretary to the Commission, 701 E Street NW., Washington, D.C. 20436.

FOR FURTHER INFORMATION CONTACT: The Honorable Bill Alberger, Counselor for Employee Responsibilities and Conduct, or Michael B. Jennison, Esq., Acting Deputy Counselor, U.S. International Trade Commission, 701 E Street NW., Washington, D.C. 20436; telephone 202–523–0133, or 202–523–0189, respectively.

SUPPLEMENTARY INFORMATION: On October 26, 1978, Congress enacted the Ethics in Government Act of 1978. Title V of the act amended 18 U.S.C. 207, which restricts postemployment conflicts of interest. Congress further amended 18 U.S.C. 207 on June 22, 1979, with passage of Public Law 96–28, 93 Stat. 76. Subsection 207(j) of title V provides for administrative sanctions to be applied by an agency to a former officer or employee found to have violated subsections 207 (a), (b), or (c). Agencies are required, in consultation with the Director of the Office of Government Ethics, to establish procedures to carry out subsection 207(j).

These regulations establish procedures for handling allegations of a violation of subsections (a), (b), or (c), affording the affected former

officer or employee notice and opportunity for a hearing, and applying an administrative sanction if a violation is found.

It is proposed that title 19, part 200, of the Code of Federal Regulations be amended by the addition of a new subpart D, to be composed of sections 200.735–124 through 126, as follows:

CONTENTS

SUBPART D—PROVISIONS FOR ADMINISTRATIVE ENFORCEMENT OF POSTEMPLOYMENT CONFLICT OF INTEREST RESTRICTIONS

200.735–124. General.
200.735–125. Exemption from restrictions.
200.735–126. Administrative enforcement proceedings.

AUTHORITY: Ethics in Government Act of 1978, Public Law 95–521, 92 Stat. 1864 (18 U.S.C. 207) (as amended by Public Law 96–28, 93 Stat. 76 (1979)); 45 F.R. 7402 (1979) (to be codified at 5 C.F.R. part 737).

SUBPART D—PROVISIONS FOR ADMINISTRATIVE ENFORCEMENT OF POSTEMPLOYMENT CONFLICT OF INTEREST RESTRICTIONS

Sec. 200.735–124. General.

The procedures in this subpart are established pursuant to subsection 207(j) of title 18, United States Code, for the administrative enforcement of the restrictions on postemployment activities in title V of the Ethics in Government Act of 1978 (18 U.S.C. 207 (a), (b), and (c)) and implementing regulations published by the Office of Government Ethics (5 CFR part 737). Subsections 207 (a), (b), and (c) of title 18, United States Code, prohibit certain forms of representational activity or communications by former Commission employees.

Sec. 200.735–125. Exemption from restrictions.

(a) *Scientific and technological information solicited by the Commission.*—Communications of a former Commission employee solely for the purpose of furnishing scientific or technological information solicited by the Commission in the course of its statutory investigations are exempted from the restrictions on postemployment practices.

(b) *Exemption for persons with special qualifications in a technical discipline.* (1) *Applicability.*—A former Commission employee may be exempted from the restrictions on postemployment practices if the Chairman, in consultation with the Director, office of Government Ethics (the Director), executes a certification published in the Federal Register that the former Commission employee has outstanding qualifications in a scientific, technological, or other technical discipline; that the former Commission employee is acting with respect to a particular matter which requires such qualifications; and that the national interest would be served by the former Commission employee's participation.

(2) *Certification authority.*—Certification shall be by the Chairman,

or in the absence thereof, by the acting head of the Commission. Consultation with the Director shall precede any certification. The exemption is effective upon the execution of the certification. The Secretary shall immediately transmit the certification to the Federal Register for publication.

(c) *Testimony and statement under oath or subject to penalty of perjury.* (1) *Applicability.*—A former Commission employee may testify before any court, board, commission, or legislative body with respect to matters of fact within the personal knowledge of the former Commission employee. This provision does not, however, allow a former Commission employee, otherwise barred under 18 U.S.C. 207 (a), (b), or (c), to testify on behalf of another as an expert witness except (i) to the extent that the former employee may testify from personal knowledge as to occurrences which are relevant to the issues in the proceeding, including those in which the Commission employee participated, utilizing his or her expertise, or (ii) in any proceeding where it is determined that another expert in the field cannot practically be obtained, that it is impracticable for the facts or opinions on the same subject to be obtained by other means, and that the former Commission employee's testimony is required in the interest of justice.

(2) *Statements under penalty of perjury.*—A former Commission employee may make any statement required to be made under penalty of perjury, such as those required in registration statements for securities, tax returns, or security clearances. The exception does not, however, permit a former employee to submit pleadings, applications, or other documents in a representational capacity on behalf of another merely because the attorney or other representative must sign the documents under oath or penalty of perjury.

Sec. 200.735–126. Administrative enforcement proceedings.

The following are basic guidelines for administrative enforcement of restrictions on postemployment activities:

(a) *Initiation of administrative disciplinary hearing.*—(1) On receipt of information regarding a possible violation of 18 U.S.C. 207, and after determining that such information does not appear to be frivolous, the Chairman shall expeditiously provide such information, along with any comments or agency regulations, to the Director and to the Criminal Division, Department of Justice. Any investigation or administrative action will be coordinated with the Department of Justice to avoid prejudicing criminal proceedings, unless the Department of Justice informs the Commission that it does not intend to initiate criminal prosecution.

(2) Whenever the Chairman has determined after appropriate review that there is reasonable cause to believe that a former Commission employee has violated 18 U.S.C. 207 (a), (b), or (c) or imple-

menting regulations of the Office of Government Ethics (5 CFR part 737), he or she shall initiate an administrative disciplinary proceeding by providing the former Commission employee with notice as defined in subsection (b).

(3) The Chairman shall take all necessary steps to protect the privacy of former employees prior to a determination of sufficient cause to initiate an administrative disciplinary hearing.

(b) *Notice.*—(1) The Chairman shall provide the former Commission employee with notice of an administrative disciplinary proceeding and an opportunity for a hearing.

(2) Notice to the former Commission employee must include—

(A) A statment of allegations and the basis thereof in detail sufficient to enable the former Commission employee to prepare an adequate defense;

(B) Notification of the right to a hearing;

(C) An explanation of the method by which a hearing may be requested; and

(D) A copy of this subpart.

(c) *Examiner.*—(1) The presiding official at proceedings under this subpart shall be an individual to whom the Chairman has delegated authority to make a recommended determination (hereinafter referred to as examiner).

(2) An examiner shall be an experienced government attorney of high moral character and sound judgment.

(3) An examiner shall be impartial. No individual who has participated in any manner in the decision to initiate the proceedings may serve as an examiner in those proceedings.

(d) *Scheduling of hearing.*—In setting a hearing date, the examiner shall give due regard to the former Commission employee's need for—

(A) Adequate time to prepare a defense properly, and

(B) An expeditious resolution of allegations that may be damaging to his or her reputation.

(e) *Hearing rights.*—A hearing shall include, at a minimum, the following rights:

(1) To be represented by counsel,

(2) To introduce and examine witnesses and to submit physical evidence,

(3) To confront and cross-examine adverse witnesses,

(4) To present oral argument; and

(5) To obtain a transcript or recording of the proceeding on request.

(f) *Burden of proof.*—In any hearing under this subpart the Commission has the burden of proof and must establish a violation by clear and convincing evidence. The case of the Commission shall be presented by the Office of the General Counsel.

(g) *Recommended determination.*—(1) The examiner shall make a recommended determination exclusively on matters of record in the proceeding and shall set forth therein all findings of fact and conclusions of law relevant to the matters at issue. The recommended determination shall be delivered to the parties.

(2) Within ten (10) days of the date of receipt of the recommended determination either party may submit to the Chairman exceptions to the recommended determination and alternative findings of fact and conclusions of law.

(h) *Final administrative decision.*—(1) Within forty (40) days of the date of the recommended determination, the Chairman shall make a final administrative decision based solely on the record of the proceedings.

(2) In the event that no hearing is requested, the Chairman shall make a final administrative decision within forty (40) days of the date notice is provided to the former employee and the record of the proceedings shall consist of the statement of allegations as defined in subsection (b)(2)(A) and whatever written response the former employee shall provide.

(3) The Chairman shall specify in the final administrative decision the findings of fact and conclusions of law that differ from the recommended determination of the hearing examiner.

(i) *Administrative sanctions.*—The Chairman may take appropriate action in the case of any individual who is found in violation of 18 U.S.C. 207 (a), (b), or (c) or implementing regulations of the Office of Government Ethics (5 CFR part 737) after a final administrative decision by—

(1) Prohibiting the individual from making, on behalf of any other person (except the United States), any formal or informal appearance before, or, with the intent to influence, any oral or written communication to, the Commission on any matter of business for a period not to exceed five (5) years. This prohibition may be enforced by directing Commission employees to refuse to participate in any such appearance or to accept any such communication;

(2) Taking other appropriate disciplinary action.

(j) *Judicial review.*—Any person found to have participated in a violation of 18 U.S.C. 207 (a), (b), or (c) or these regulations may seek judicial review of the administrative determination. Review shall be before the appropriate United States district court.

By order of the Commission.

Issued: February 15, 1980.

KENNETH R. MASON,
Secretary.

Proposed Rules on Regulatory Impact

AGENCY: U.S. International Trade Commission.

ACTION: Proposed rule.

SUMMARY: The U.S. International Trade Commission is issuing this notice to obtain public comments on its proposed rules on the regulatory impact of substantive rulemaking. These proposed rules are necessitated by the consideration by the Commission of proposed substantive rules under 19 U.S.C. 1337. These proposed rules on regulatory impact would establish the definition of significant regulations, the criteria and elements of regulatory analysis, the standards for review of existing regulations, and the procedures for public participation in the development of regulations.

DATE: Comments on this proposed rule must be received on or before (30 days after the publication of this notice in the Federal Register).

ADDRESS: Send comments to Jack Simmons, Office of the General Counsel, U.S. International Trade Commission, Washington, D.C. 20436. Copies of all written comments will be available for examination in the Office of the Secretary, U.S. International Trade Commission, 701 E Street NW., Washington, D.C.

FOR FURTHER INFORMATION: Write Jack Simmons at the above address or telephone 202–523–0345.

SUPPLEMENTARY INFORMATION:

I. Introduction.

II. Proposals for rules on regulatory impact.

I. INTRODUCTION

The Commission is a six-member independent agency with broad factfinding powers under the Tariff Act of 1930, the Agricultural Adjustment Act, the Trade Act of 1974, and the Trade Agreements Act of 1979. These statutes authorize the Commission to investigate factors relating to the foreign trade of the United States, with an emphasis on the competitive impact of imported products in the domestic markets of U.S. producers. The character of the Commission's investigative responsibility depends upon the specific statutory mandate. In some cases, the Commission's investigation consists of a purely informational study. In others, the statutes authorize the Commission to make final determinations on import injury to domestic industries.

Due to the primarily investigatory nature of its functions, the Commission has in the past done little rulemaking. Although the Commission does adjudicate cases involving unfair practices in the import trade, this jurisdiction has not yet resulted in significant regulatory activities. Such regulations as have been published relate to the pro-

cedural aspects of participating in the different types of Commission investigations, and have no significant impact on the economy. Consequently, there has been no need for the Commission to establish a formal process for developing regulations; the process has been ad hoc. The Commission, however, is now considering substantive rules which would define certain unfair methods of competition and unfair acts in the importation and sale of steel wire rope.

The Commission's regulations are found in 19 CFR chapter II. These regulations are—

Part 200 Employee responsibilities and conduct.
Part 201 Rules of general application.
Part 202 Investigations of cost of production.
Part 204 Investigations of effects of imports on agricultural programs.
Part 205 Investigations to determine the probable economic effects on the economy of the U.S. of proposed modifications of duties or of any barrier to (or other distortion of) international trade or of taking retaliatory actions to obtain the elimination or unjustifiable or unreasonable foreign acts or policies which restrict U.S. commerce.
Part 206 Investigations for relief from import injury or market disruption to domestic industries.
Part 207 Investigations of whether injury to domestic industries results from imports sold at less than fair value or from subsidized exports to the U.S.
Part 208 (Reserved.)
Part 209 (Reserved.)
Part 210 Investigations of alleged unfair practices in import trade.

II. PROPOSALS FOR RULES ON REGULATORY IMPACT

It is proposed that the following amendment be made to 19 CFR chapter II, subchapter C—Adjudicative Investigations.

A new Part 212 would be added containing subparts A and B as follows:

Subpart A—General provision for rulemaking procedures.
Subpart B—Rules.

SUBPART A—GENERAL PROVISION FOR RULEMAKING PROCEDURES

212.100-1. Purpose.
212.100-2. Scope.
212.100-3. Significant regulations.
212.100-4. Regulatory analysis.
212.100-5. Review of existing regulations.
212.100-6. Public participation in the development of regulations.

AUTHORITY: Sec. 335, Tariff Act of 1930 (19 U.S.C. Section 1335).

212.100-1. Purpose.

This subpart establishes the impact analysis procedures which shall

apply in the development of substantive rules proposed by the Commission.

212.100–2. Scope.

A. Except as provided in this section, this subpart applies to all regulations issued by the U.S. International Trade Commission published in the Federal Register.

B. Unless specifically noted to the contrary, this subpart does not apply to:

1. Regulations issued in accordance with the provisions for adjudications and formal rulemaking in the Administrative Procedure Act (5 U.S.C. 556, 557);

2. Matters related to agency management or personnel;

3. Regulations related to Federal Government procurement;

4. Regulations issued pursuant to statutory or judicial deadlines of less than 91 days or regulations that are issued in response to an emergency;

5. Regulations establishing agency practices or procedures; and

6. Any other matter exempted by the Commission.

C. In cases where the exemptions in pargaraph B of this section apply, regulations will be developed, to the extent practicable, in accordance with the spirit and intent of this subpart.

212.100–3. Significant regulations.

A. The Commission shall identify a regulation to be significant if—

1. The regulation bears an important relationship to Commission policy;

2. A substantial number of individuals, businesses, and public or private organizations would be affected by the regulation; and

3. Compliance with or reporting requirements of the regulations are likely to have a substantial impact on prices or other competitive conditions of the affected merchandise or industry.

B. Before developing new significant regulations, the Commission shall review all issues to be considered; explore alternative approaches; prepare a plan for obtaining public comments; prepare a plan for consultation with other government agencies, if appropriate; and prepare a schedule for the completion of all necessary steps in the development of the regulation.

C. The Commission shall approve all significant regulations before they are published in the Federal Register. Before approving significant regulations, the Commission must determine that—

1. The regulation is necessary;

2. The effects, direct and indirect, have been taken into account;

3. Alternative approaches to the problems and various types of regulations have been considered and the least burdensome of the acceptable alternatives was chosen;

4. Public comments have been considered;

5. The regulation is written clearly and is understandable to those who must comply with it;

6. The cost of the regulation to the Government and to the public has been estimated; and

7. The name, address, and telephone number of a knowledgeable Commission official is included in the publication.

212.100–4. Regulatory analysis.

A. A regulatory analysis shall be required for each proposed significant regulation which could be reasonably expected:

1. To result in increased costs to consumers, business, and Federal, State and local governments exceeding $100 million during any one (1) year of its existence;

2. To result in increased costs to either consumers, businesses, or Federal, State, and local governments exceeding $25 million during any 1 year of its existence;

3. To result in a large increase or decrease in costs or prices for the products(s) and/or service(s) affected by the proposed regulations; or

4. To redirect large amounts of supplies of material, equipment, products, or services from one market to another.

B. The General Counsel or the Director of Operations shall inform the Commission of each proposed regulation which, in his judgment, requires a regulatory analysis.

C. A regulatory analysis shall also be prepared when the Commission determines that such an analysis should be performed.

D. A regulatory analysis shall consist of an examination of alternative approaches in the decisionmaking process and shall include—but not be limited to—the following elements:

1. A succinct statement of the situation;

2. A description of the major alternative methods of dealing with the situation which were considered; and

3. An analysis of the probable economic consequences of each of the major alternatives with an explanation of the reasons for choosing one alternative over the others.

E. The notice of proposed rulemaking for each regulation for which a regulatory analysis is required shall include—

1. An explanation of the regulatory approach that has been selected or favored by the Commission;

2. A summary describing the other alternatives which have been considered;

3. The major reason(s) for selecting or favoring a particular alternative.

F. The Commission shall consider public comments on each regulatory anaylsis and have a final regulatory analysis prepared to be

made available when the final regulations are published. Significant public comments shall be summarized and responded to in the final regulation.

212.100–5. Review of existing regulations.

A. The Commission shall review all existing regulations administered by the Commission at least once every 4 years.

B. The following criteria, among others, shall be considered in the review of existing regulations:

1. The continued need for the regulation;
2. The availability of alternative approaches to the regulation;
3. Any complaints or suggestions received in connection with the regulation;
4. Any burden imposed on those affected by the regulation;
5. The cost to the Government of the administration of the regulation;
6. The desirability of revising the language of the regulation to simplify or clarify it; and
7. The desirability of eliminating duplicative regulations.

212.100–6. Public participation in the development of regulations.

A. The Commission shall consider a variety of ways to provide the public with an early opportunity to participate in the development of the Commission's regulations. Among the methods to be considered are—

1. Publishing an advance notice of proposed rulemaking;
2. Holding public hearings or open conferences;
3. Mailing notices of proposed regulations to publications likely to be read by persons who might be affected by the regulations; and
4. Providing for more than one cycle of public comments.

B. When none of the methods listed in paragraph A of this section is used in a particular rulemaking covered by this subpart, the accompanying final regulation shall explain the reasons and indicate what other steps were taken to assure an adequate opportunity for public participation.

C. The public shall be given at least 60 days to comment on all proposed significant regulations. Exceptions to this policy shall be granted only by the Commission and only when the Commission determines that it is not possible to comply. When an exception is made the regulation shall be accompanied by a brief statement of the reasons for the shorter time period.

By order of the Commission.

Issued: February 20, 1980.

KENNETH R. MASON,
Secretary.

(603-TA-5)

Calcium Pantothenate From Japan

Notice of Preliminary Investigation

Notice is hereby given that on February 12, 1980, the U.S. International Trade Commission voted to institute a preliminary investigation under section 603 of the Trade Act of 1974 (19 U.S.C. 2482) to investigate whether imports of calcium pantothenate from Japan are the subject of:

(a) a combination, contract or conspiracy to restrain trade and commerce in the United States; or

(b) a scheme to monopolize the d-calcium pantothenate and/or dl-calcium pantothenate submarkets in the United States.

Specifically, among other issues, the Commission staff has been directed to investigate the following questions raised by the amended complaint filed on October 24, 1979, by Syntex Agribusiness, Inc.:

(1) The identities of any and all participants in the d-calcium pantothenate and dl-calcium pantothenate markets in the United States and their respective market shares;

(2) The relationship among certain Japanese manufacturers or importers of calcium pantothenate;

(3) Any attempts by certain Japanese manufacturers or importers to absorb the amount of any antidumping duties imposed on these imported products;

(4) Prices charged by the certain Japanese manufacturers to U.S. importers and prices charged by U.S. importers to U.S. consumers for for calcium pantothenate;

(5) Cost of production for calcium pantothenate manufactured in Japan.

The Commission staff has been directed to submit a report on the above matters to the Commission no later than August 11, 1980.

By order of the Commission.

Issued: February 20, 1980.

Kenneth R. Mason,
Secretary.

U.S. Customs Service

Index

T.D. No.

Treasury decisions: Bonds: Instruments of international traffic 80-76

Customs Service decisions:

C.S.D. No.

Bonds:

Unfair methods of competition and unfair trade practices 80-35

Evidence of authority to act by officer of corporate surety 80-37

Inbond merchandise intransit through United States:

Goods entered for transportation and entry via military transportation officer to overseas area exchange 80-49

Exposed film imported for viewing and evaluation 80-36

Carrier control:

Carriage of repair parts for containers 80-33

Application of coastwise laws to foreign-built barge used to transport fish 80-46

Customs treatment of aircraft as private or commercial 80-50

Commercial mail importations: Collection of State taxes on importation of American-made cigarettes 80-41

Collections and refunds: Whether duties on Chinese elm seedlings destroyed under State law are refundable 80-40

Copyright infringement:

Manufacturing clause of 1976 U.S. Copyright Law 80-42

Whether characters on the faces of children's watches are piratical copies 80-47

Generalized system of preferences:

Substantial transformation of constituent chemical materials; 35 percent value-added requirement 80-34

Marking:

Partially obscured country-of-origin marking label on clock movement 80-31

Conspicuous country-of-origin marking of household paring knife 80-32

Unmarked dinnerware in marked cartons to be used by airline for inflight meals 80-38

Country-of-origin marking requirements for eyeglass frame components 80-43

Country-of-origin marking of silver-plated flatware in prepackaged sets 80-44

Special appraisement: Processed cloth from the Virgin Islands 80-45

Temporary importation under bond: Drugs intended solely for testing; failure to export under Customs supervision 80-48

Trademark infringement: Doctrine of foreign equivalents 80-39

Appeal No. 79-15: ASG Industries, Inc., PPG Industries, Inc., Libbey-Owens-Ford Co., and C.E. Glass, *v.* The United States

Customs Court

Appeals to U.S. Court of Customs and Patent Appeals (p. —):
Appeals:
80-16—Carbon steel bars and bars-shapes; LTFV and injury determinations; dumping duties; Anti-dumping Act
80-17—Steel reinforcing bars; LTFV and injury determinations; dumping duties; Anti-dumping Act
Bow hair, horse tail hair, C.D. 4843
Construction; Tariff Schedules of the United States:
General Headnotes and Rules of Interpretation, headnote 3(e), C.D. 4843
Item 186.55, C.D. 4843
Item 726.20, C.D. 4843
Schedule 1, part 15, subpart D, C.D. 4843
Schedule 7, part 3, subpart B, C.D. 4843
Hair:
Bow, C.D. 4843
Horse tail, C.D. 4843
Violin bow, C.D. 4843
Horsehair, C.D. 4843
Horse tail hair; bow hair, C.D. 4843
Other * * * hair, C.D. 4843
Violin bow hair, C.D. 4843

f# 313-581
350
Item 950-D
contains
T1.11/3:14/12
9247

Customs Bulletin

Regulations, Rulings, Decisions, and Notices concerning Customs and related matters

and Decisions

of the United States Court of Customs and Patent Appeals and the United States Customs Court

Vol. 14 | MARCH 19, 1980 | No. 12

9247

This issue contains

T.D. 80-77 through 80-81
C.D. 4844
Protest abstracts P80/30 through P80/32
Reap. abstracts R80/18 through R80/28
International Trade Commission Notice

THE DEPARTMENT OF THE TREASURY
U.S. Customs Service

NOTICE

The abstracts, rulings, and notices which are issued weekly by the U.S. Customs Service are subject to correction for typographical or other printing errors. Users may notify the U.S. Customs Service, Logistics Management Division, Washington, D.C. 20229, of any such errors in order that corrections may be made before the bound volumes are published.

For sale by the Superintendent of Documents, U.S. Government Printing Office, Washington, D.C. 20402. Price: $1.30 (single copy domestic); $1.65 (single copy foreign). Subscription price: $65.00 a year domestic; $81.25 a year foreign.

U.S. Customs Service

Treasury Decisions

(T.D. 80-77)

Foreign Currencies—Daily Rates for Countries Not on Quarterly List

Rates of exchange based on rates certified to the Secretary of the Treasury by the Federal Reserve Bank of New York for the Brazil cruziero, People's Republic of China yuan, Hong Kong dollar, Iran rial, Philippines peso, Singapore dollar, Thailand baht (tical), and Venezuela bolivar

The Federal Reserve Bank of New York, pursuant to section 522(c), Tariff Act of 1930, as amended (31 U.S.C. 372(c)), has certified buying rates for the dates and foreign currencies shown below. The rates of exchange, based on these buying rates, are published for the information and use of Customs officers and others concerned pursuant to part 159, subpart C, Customs Regulations (19 CFR 159, subpart C).

Brazil cruziero:	
February 11, 1980	$0.0228
February 12, 1980	Holiday
February 13–15, 1980	.0228
People's Republic of China yuan:	
February 11, 1980	$0.666711
February 12, 1980	Holiday
February 13–15, 1980	.666711
Hong Kong dollar:	
February 11, 1980	$0.206313
February 12, 1980	Holiday
February 13, 1980	.205297
February 14, 1980	.204415
February 15, 1980	.204499
Iran rial:	
February 11–15, 1980	Not available

Philippines peso:	
February 11, 1980	$0.1350
February 12, 1980	Holiday
February 13–15, 1980	.1350
Singapore dollar:	
February 11, 1980	$0.464792
February 12, 1980	Bank Holiday
February 13, 1980	.464576
February 14, 1980	.464533
February 15, 1980	.464468
Thailand baht (tical):	
February 11, 1980	$0.048875
February 12, 1980	Holiday
February 13–15, 1980	.048875
Venezuela bolivar:	
February 11, 1980	$0.2329
February 12, 1980	Holiday
February 13–15, 1980	.2329

(LIQ-3-TRODE)

Dated: March 5, 1980.

G. Scott Shreve,
Acting Director,
Duty Assessment Division.

(T.D. 80-78)

Foreign Currencies—Daily Rates for Countries Not on Quarterly List

Rates of exchange based on rates certified to the Secretary of the Treasury by the Federal Reserve Bank of New York for the Brazil cruziero, Peoples Republic of China yuan, Hong Kong dollar, Iran rial, Philippines peso, Singapore dollar, Thailand baht (tical), and Venezuela bolivar

The Federal Reserve Bank of New York, pursuant to section 522(c), Tariff Act of 1930, as amended (31 U.S.C. 372(c)), has certified buying rates for the dates and foreign currencies shown below. The rates of exchange, based on these buying rates, are published for the information and use of Customs officers and others concerned pursuant to part 159, subpart C, Customs Regulations (19 CFR 159, subpart C).

Brazil cruziero:	
February 18, 1980	Holiday
February 19–20, 1980	$0.0228
February 21–22, 1980	.0221

People's Republic of China yuan:	
February 18, 1980	Holiday
February 19, 1980	$0.666711
February 20–22, 1980	.663350
Hong Kong dollar:	
February 18, 1980	Holiday
February 19, 1980	$0.204290
February 20, 1980	.203998
February 21, 1980	.202306
February 22, 1980	.202429
Iran rial:	
February 18–22, 1980	Not available
Philippines peso:	
February 18, 1980	Holiday
February 19–22, 1980	$0.1350
Singapore dollar:	
February 18, 1980	Holiday
February 19, 1980	$0.463285
February 20–21, 1980	.464360
February 22, 1980	.463822
Thailand baht (tical):	
February 18, 1980	Holiday
February 19–21, 1980	$0.048875
February 22, 1980	.0489
Venezuela bolivar:	
February 18, 1980	Holiday
February 19–22, 1980	$0.2329

(LIQ-3-TRODE)

Dated: March 5, 1980.

G. Scott Shreve,
Acting Director,
Duty Assessment Division.

(T.D. 80-79)

Foreign Currencies—Variances From Quarterly Rate

Rates of exchange based upon rates certified to the Secretary of the Treasury by the Federal Reserve Bank of New York

The following rates of exchange are based upon rates certified to the Secretary of the Treasury by the Federal Reserve Bank of New York, pursuant to section 522(c), Tariff Act of 1930, as amended (31 U.S.C. 372(c)), and reflect variances of 5 per centum or more from

the quarterly rate published in T.D. 80–28 for the following countries. Therefore, as to entries covering merchandise exported on the dates listed, whenever it is necessary for Customs purposes to convert such currency into currency of the United States, conversion shall be at the following rates:

Portugal escudo:

February 13, 1980	$0.021142
February 14, 1980	.021164
February 15, 1980	.021133

(LIQ-3-TRODE)

Dated: March 5, 1980.

G. SCOTT SHREVE,
Acting Director,
Duty Assessment Division.

(T.D. 80–80)

Foreign Currencies—Variances From Quarterly Rate

Rates of exchange based upon rates certified to the Secretary of the Treasury by by the Federal Reserve Bank of New York

The following rates of exchange are based upon rates certified to the Secretary of the Treasury by the Federal Reserve Bank of New York, pursuant to section 522(c), Tariff Act of 1930, as amended (31 U.S.C. 372(c)), and reflect variances of 5 per centum or more from the quarterly rate published in T.D. 80–28 for the following countries. Therefore, as to entries covering merchandise exported on the dates listed, whenever it is necessary for customs purposes to convert such currency into currency of the United States, conversion shall be at the following rates:

Switzerland franc:

February 22, 1980	$0.601685

(LIQ-3-TRODE)

Dated: March 5, 1980.

G. SCOTT SHREVE,
Acting Director,
Duty Assessment Division.

(T.D. 80–81)

Cotton Textile Products—Restriction on Entry

Restriction on entry of cotton textile products manufactured or produced in Pakistan

There is published below a directive of February 19, 1980, received

by the Commissioner of Customs from the chairman, Committee for the Implementation of Textile Agreements, concerning restriction on entry of cotton textile products in category 351 manufactured or produced in Pakistan. This directive amends, but does not cancel, that committee's directive of December 20, 1979 (T.D. 80–60).

This directive was published in the Federal Register on February 26, 1980 (45 F.R. 12472), by the committee.

(QUO–2–1)

Dated: March 5, 1980.

WILLIAM D. SLYNE
(For Chester R. Krayton,
Director, Duty Assessment Division).

U.S. DEPARTMENT OF COMMERCE,
INTERNATIONAL TRADE ADMINISTRATION,
Washington, D.C., February 19, 1980.

Committee for the Implementation of Textile Agreements

COMMISSIONER OF CUSTOMS,
Department of the Treasury,
Washington, D.C.

DEAR MR. COMMISSIONER: This directive amends, but does not cancel, the directive issued to you on December 20, 1979, by the chairman, Committee for the Implementation of Textile Agreements, concerning imports into the United States of certain cotton textile products, produced or manufactured in Pakistan.

Under the terms of the Arrangement Regarding International Trade in Textiles done at Geneva on December 20, 1973, as extended on December 15, 1977; pursuant to the Bilateral Cotton Textile Agreement of January 4, 1978, as amended, between the Governments of the United States and Pakistan; and in accordance with the provisions of Executive Order 11651 of March 3, 1972, as amended by Executive Order 11951 of January 6, 1977, you are directed to prohibit, effective on February 20, 1980, and for the 12-month period beginning on January 1, 1980, and extending through December 31, 1980, entry into the United States for consumption and withdrawal from warehouse for consumption of cotton textile products in category 351, produced or manufactured in Pakistan, in excess of 19,231 dozen.[1]

The actions taken with respect to the Government of Pakistan and

[1] The level of restraint has not been adjusted to reflect any imports after Dec. 31, 1979.

with respect to imports of cotton textile products from Pakistan have been determined by the Committee for the Implementation of Textile Agreements to involve foreign affairs functions of the United States. Therefore, the directions to the Commissioner of Customs, which are necessary for the implementation of such actions, fall within the foreign affairs exception to the rulemaking provisions of 5 U.S.C. 553. This letter will be published in the Federal Register.

Sincerely,

PAUL T. O'DAY,
Chairman, Committee for the Implementation of Textile Agreements.

Decisions of the United States Customs Court

United States Customs Court

One Federal Plaza
New York, N.Y. 10007

Chief Judge

Edward D. Re

Judges

Paul P. Rao
Morgan Ford
Scovel Richardson
Frederick Landis
James L. Watson
Herbert N. Maletz
Bernard Newman
Nils A. Boe

Senior Judge

Samuel M. Rosenstein

Clerk

Joseph E. Lombardi

Customs Decision

(C.D. 4844)

THE FERRISWHEEL, PLAINTIFF *v.* UNITED STATES, DEFENDANT

Scottish Highland Jackets and Kilts

Court No. 77-8-02280

Articles of Highland dress imported from Scotland were classified as ornamented men's wearing apparel, of wool, and of cotton. Plaintiff claimed the articles were not ornamented because the alleged ornamentation, fringe, epaulets, and braid, was functional and traditional. The court found that the fringe, epaulets and braid were primarily decorative and rendered the garments ornamented for tariff purposes. The Scottish Highland jackets and kilts were thus properly classified by the customs officials.

313-581 O - 80 - 2

ORNAMENTED WEARING APPAREL—DEFINITION

Whether a garment having fringe, epaulets or braiding is ornamented for tariff purposes depends upon whether the fringe, epaulets or braiding adorns or embellishes the garment. *Excelsior Import Associates, Inc.* v. *United States*, 444 F. Supp. 780, 79 Cust. Ct. 144 (1977), *aff'd*, 583 F. 2d 513, 60 CCPA—(1978); *Blairmoor Knitwear Corp. et al.* v. *United States*, 284 F. Supp. 315, 60 Cust. Ct. 388 (1968).

ORNAMENTATION—PRIMARY PURPOSE

If the primary purpose of fringe, braid or epaulets added to a garment is to adorn, embellish or enhance the appearance of the garment, it will be considered ornamented for tariff purposes, even though the additions are incidentally utilitarian. *Inter-Maritime Fwdg. Co., Inc.* v. *United States*, 69 Cust. Ct. 138, C.D. 4384 (1972); *See also Paramont Bead Corp. et al.* v. *United States*, 19 CCPA 385, T.D. 45522 (1932); *Arthur J. Fritz & Co., Inc.* v. *United States*, 52 Cust. Ct. 61, C.D. 2437 (1964).

SAMPLES—EVIDENCE

The court may look at the illustrative exhibits as potent witnesses. *Karoware, Inc.* v. *United States*, 564 F. 2d 77, 65 CCPA 1 (1977); *Marshall Field & Co.* v. *United States*, 45 CCPA 72, C.A.D. 676 (1958).

AGENCY RULINGS—PRECEDENT

Agency rulings by the Customs Service are not binding on the Customs Court. *Ditbro Pearl Co., Inc.* v. *United States*, 515 F. 2d 1157, 62 CCPA 95 (1975); *C. J. Tower & Sons* v. *United States*, 33 Cust. Ct. 14, C.D. 1628 (1954).

[Judgment for defendant.]

(Decided February 21, 1980)

Thomas G. Ferris, pro se.

Alice Daniel, Assistant Attorney General; *Joseph I. Liebman*, Attorney in Charge, Field Office for Customs Litigation (*Susan C. Cassell* at the trial and on the brief), for the defendant.

RE, Chief Judge: The question presented in this case pertains to the proper classification, for Customs duty purposes, of articles of Highland dress imported from Scotland. The articles include two men's kilts made of wool, a Sheriffmuir jacket made from cotton, and an Argyll jacket fashioned from wool.

The wool garments were classified by the Customs officials under item 380.02 of the Tariff Schedules of the United States (TSUS), as modified by T.D. 68–9, as ornamented men's wearing apparel, of wool. Accordingly, they were assessed with duty at the rate of 42.5 per centum ad valorem. The Sheriffmuir jacket was classified as an article of ornamented men's wearing apparel, of cotton, under TSUS

item 380.00, as modified by T.D. 68–9, and was assessed with duty at the rate of 35 per centum ad valorem.

Plaintiff maintains that none of these items is ornamented. Hence, it contends that the wool garments should properly be classified under TSUS item 380.66 with a duty of 37.5 cents per pound plus 21 per centum ad valorem, and the Sheriffmuir jacket under TSUS item 380.12, as modified by T.D. 68–9, with a duty of 8 per centum ad valorem, as men's wearing apparel, not ornamented.

The pertinent statutory provisions are as follows:

Classified under:

Schedule 3, part 6, subpart F:

"Men's or boys' lace or net wearing apparel, whether or not ornamented, and other men's or boys' wearing apparel, ornamented:

380.00	Of cotton	35% ad val.
380.02	Of wool	42.5% ad val."

Claimed under:

Schedule 3, part 6, subpart F:

"Other men's or boys' wearing apparel, not ornamented:

Of cotton:

* * * * * * *

380.12	Valued over $4 each	8% ad val.

* * * * * * *

Of wool:

* * * * * * *

380.66	Valued over $4 per pound	37.5¢ per lb. + 21% ad val."

Schedule 3, headnote 3 of the Tariff Schedules of the United States provides in pertinent part:

> 3. For the purposes of the tariff schedules—
>
> (a) *the term "ornamented"*, as used with reference to textile fabrics and other articles of textile materials, *means fabrics and other articles* of textile materials *which are ornamented with*—
>
> (i) fibers, filaments (including tinsel wire and lame), yarns, or cordage, any of the foregoing introduced as needlework or otherwise, including—
>
> (A) embroidery, and pile or tufting, whether wholly cut, partly cut, or not cut, and
>
> (B) other types of ornamentation, but not including functional stitching or one row of straight hemstitching adjoining a hem;
>
> (ii) burnt-out lace;
>
> (iii) lace, netting, *braid*, *fringe*, edging, tucking, or trimming, or textile fabric;
>
> (iv) applique and replique work, beads, bugles spangles, bullions, or ornaments; or
>
> (v) any combination of foregoing types of methods of ornamentation; [Italic added in part.]

At the outset, the court finds that plaintiff has abandoned its claim as to the Argyll jacket. Plaintiff, at the trial, submitted an illustrative exhibit of the wool Argyll jacket. After the trial, however, but before briefs were submitted, plaintiff requested that the exhibit be returned for its personal, temporary use. Defendant acceded to this request on the stipulation that plaintiff return the exhibit contemporaneously with filing its brief, or, failing to do so, abandon that protion of the claim which pertained to the Argyll jacket. Plaintiff agreed to this stipulation. Nevertheless, plaintiff filed its brief without returning the exhibit. It thus abandoned its claim as to the Argyl jacket. Consequently, the Customs classification of the Argyll jacket under TSUS item 380.02 is affirmed.

As to the remaining articles, the two men's kilts and the Sheriffmuir jacket, the question presented is whether these garments are ornamented for Customs duty purposes. Based upon a careful examination of the garments, and the record before the court, it is the determination of the court that they have been properly classified by the Customs officials as "other men's or boys' wearing apparel, ornamented," of wool, and of cotton, respectively.

At the trial, plaintiff called four witnesses and introduced five exhibits, illustrative of the garments in question. The defendant did not call any witnesses, but relied upon its cross-examination of the witnesses, and the statutory presumption of correctness which attaches to the classification of the Customs officials. 28 U.S.C. 2635(a); *United States* v. *New York Merchandise Co., Inc.*, 435 F. 2d 1315, 58 CCPA 53 (1970). To overcome this presumption, the plaintiff must prove that the Customs classification was wrong and that its claimed classification is correct. *United States* v. *New York Merchandise Co., Inc., supra; Technical Tape Corp.* v. *United States*, 55 CCPA 38, C.A.D. 931 (1968).

The kilts are garments of male attire, similar to skirts, which wrap around the body at the waist and fall to the knee. They are fashioned in wool plaid known as tartan. Traditionally, different tartans distinguished Scottish family clans and militia. Because the wrap of the kilt overlaps across the front of the garment, the front is two pieces thick. The underneath piece attaches at the left hip, and the top piece, or apron, overlaps the underneath piece, and attaches at the right hip. The edge of the apron is fringed from the waist to the knee.

The Sheriffmuir jacket is made of blue cotton velvet. It is a close-fitting man's jacket, tapered to the waist, with braided epaulets, standup collar, and gauntlet cuffs. Pointed double flaps, two sets in the front and two in the back, hang from the waist. A pocket is concealed on the under flap of each of the double sets of flaps in the front of the jacket. On the top flap of all four sets of flaps are three strips of braiding spaced about an inch and a half from one another. At the

end of each strip of braid is a silver button. Braid and buttons are similarly affixed to each cuff.

Mr. Thomas G. Ferris, the owner of plaintiff import business, is an attorney. Although not admitted to practice before this court, he appeared pro se. He testified that the fringe on the kilts serves to strengthen and protect the edge of the kilt's front piece or apron from wear, and may be replaced, thereby extending the life of the kilt. He explained that centuries ago the fringe resulted from the normal fraying of the fabric. With the invention of the sewing machine and refinement of the kilt, the fringe is now added to the kilt by turning under the front edge of the apron, and sewing two separate pieces of cloth to the turned under edge. These two pieces of cloth, which extend about half an inch beyond the edge, are then raveled to produce the fringe. According to Mr. Ferris, without a fringe a kilt is not authentic, unless it is one of those kilts worn by Highland military regiments which does not have a fringe. Mr. Ferris has never seen a civilian kilt that did not have a fringe.

On cross-examination, Mr. Ferris admitted that he had never replaced a fringe on a kilt, nor had any of his customers ever asked him to replace one. He also testified that women's kilts were identical to men's kilts in all respects except size. In response to questioning he admitted that the fringe on a woman's kilt, though physically like that on a man's, was decorative rather than functional.

As to the Sheriffmuir jacket, Mr. Ferris testified that the epaulets are functional because the left one may be used to secure the plaid, and the right one to secure a sword strap. The plaid is a rectangular length of tartan, worn so that it extends from the left shoulder diagonally across the back, under the right arm and diagonally across the chest to the left shoulder where it is pinned to the epaulet with a large brooch. According to Mr. Ferris, the purpose of securing the plaid to the left epaulet, rather than to the jacket, is to prevent the jacket from being torn should the plaid inadvertently be pulled. Mr. Ferris also testified that the plaid is primarily worn on dress occasions, and that the sword strap is not usually worn, though it may be used for ceremonial purposes.

With reference to the braiding on the jacket, Mr. Ferris admitted that it serves no function but is traditional. He explained that it is intended to give the appearance of ancient style jackets by simulating buttonholes on the cuffs and pocketflaps which were once functional. He noted that in ordering Sheriffmuir jackets he specifies only the name of the jacket, the size, and the fabric number. Mr. Ferris indicated that Sheriffmuir jackets always come with braid and button features, and if one came without them he would return it. He explained that his customers are almost exclusively members of Scottish

societies, and authenticity is important to these groups. Mr. Ferris also stated that he imported similar jackets for women, and that on those jackets he considered the braiding to be ornamental.

Plaintiff's second witness was Mr. J. Charles Thompson, an expert on Scottish heraldry and tartans. He testified that he does not believe anyone can explain the origin of the fringe on the kilt, but if the side of the kilt is merely hemmed, the hem very soon may wear through. The witness said he has replaced the fringe on a kilt. Concerning the jacket, Mr. Thompson testified that the epaultes may be used to hold the bonnet when it is not being worn. This use comes from the military. He stated that the buttons and braid are also military features which originated in the latter half of the 18th century. Mr. Thompson noted that the plaid is part of formal attire, and should not be worn on all occasions when Highland dress is worn.

Plaintiff's two other witnesses were Mr. William Banks, the manager of a store owned by a Scottish company which manufactures and sells Highland dress, and Mr. William Quay, the owner of a small business which imports Scottish wearing apparel. Mr. Banks testified that women's kiltlike skirts are not traditional garments but that there is no significant difference between the fringing on the woman's garment and that on a man's, other than cost of production. He further testified that the fringing on a worman's kiltlike skirt has an ornamental effect, and that it performs no function.

Mr. Quay testified that in ordering Highland dress he specifies no special features other than color. He has never received a jacket which did not meet accepted standards. Were he to receive one without the traditional epaulets, braid, and buttons, he would send it back since it would not be authentic attire. The same would be true of the fringe on a kilt.

The specific Customs classification question presented is whether the fringe on the kilts, and the epaulets and braid on the jacket, render the kilts and the jacket ornamented under the appropriate provisions of the tariff schedules.

Plaintiff maintains that the imported garments are not ornamented because: (1) The fringe and epaulets are functional, and the braiding, though no longer functional, simulates buttonholes which were once functional; and (2) all of these features are traditional in Highland dress, and, therefore, do not constitute ornamentation.

The defendant asserts that the plaintiff has failed to overcome the presumption of correctness which attaches to the classification of the Customs officials. It indicates that whether or not braiding and fringe per se constitute ornamentation, headnote 3 of schedule 3 "establishes that braid and fringe are at least among the group of common features which ornament garments." It maintains that the "samples themselves

stand as potent witnesses for the Government and dispel any contention that the fringe, braid, and also the epaulets are not decorative embellishments which adorn the garments." The defendant adds that "the fringe, braid, and epaulets are primarily, if not exclusively, decorative."

The law which pertains to the ornamentation of imported garments has been examined in a number of decided cases. See *Excelsior Import Associates, Inc.* v. *United States*, 444 F. Supp. 780, 79 Cust. Ct. 144 (1977), *aff'd*, 583 F. 2d 513, 60 CCPA—(1978); *Blairmoor Knitwear Corp. et al.* v. *United States*, 284 F. Supp. 315, 60 Cust. Ct. 388 (1968); *The Baylis Brothers, Inc.* v. *United States*, 282 F. Supp. 791, 60 Cust. Ct. 336 (1968), *aff'd*, 416 F. 2d 1383, 56 CCPA 115 (1969). These cases have interpreted headnote 3 of schedule 3 which provides that for purposes of the tariff schedules—

> (a) *the term "ornamented"*, as used with reference to textile fabrics and other articles of textile materials, *means fabrics and other articles* of textile materials *which are ornamented with*—
>
> * * * * * * *
>
> (iii) lace, netting, *braid*, *fringe*, edging, tucking, or trimming, or textile fabric; [Italic added in part.]

They teach that, notwithstanding the headnote language, the addition of lace, netting, braid, or fringe, for example, would not per se render an imported garment "ornamented." Rather, the headnote "sets forth the circumstances under which fabrics and articles may be considered to be ornamented, and the types of embellishments which may accomplish that effect." *Blairmoor Knitwear Corp. et al.* v. *United States*, 284 F. Supp. 315, 318, 60 Cust. Ct. 388, 392 (1968).

In essence, in every case, the basic question is whether the additional materials or features were used primarily for the purpose of ornamentation. If the primary purpose was ornamentation, the imported article or garment has been held to be "ornamented" within the meaning of the tariff schedules. Ornamentation, as distinguished from a utilitarian purpose, implies adornment and embellishment, i.e., an enhancement in appearance and beauty.

The cases also teach that the adornment or embellishment accomplished by the addition, such as the braid or fringe in this case, must be more than incidental. However, if the primary purpose of the addition is ornamental, an incidental utilitarian purpose will not prevent the garment from being considered "ornamented" for Customs duty purposes. *Inter-Maritime Fwdg. Co., Inc.* v. *United States*, 69 Cust. Ct. 138, C.D. 4384 (1972). *See also Paramount Bead Corp. et al.* v. *United States*, 19 CCPA 385, T.D. 45522 (1932); *Arthur J. Fritz & Co., Inc.* v. *United States*, 52 Cust. Ct. 61, C.D. 2437 (1964). In the present case, therefore, the court must determine whether the

fringe, braid, and epaulets adorn or embellish the garments, and whether enhancing the beauty and appearance of the garments is their primary purpose.

It is often stated in Customs law that illustrative exhibits are potent witnesses. *Karoware, Inc.* v. *United States*, 564 F. 2d 77, 65 CCPA 1 (1977); *Marshall Field & Co.* v. *United States*, 45 CCPA 72, C.A.D. 676 (1958). This is particularly true in a case where the issue is one of ornamentation. *The Baylis Brothers, Inc.* v *United States*, 282 F. Supp. 791, 60 Cust. Ct. 336 (1968), *aff'd*, 416 F. 2d 1383, 56 CCPA 115 (1969).

It is clear that the fringe added to the kilts, and the epaulets and braid added to the jacket, embellish and enhance their beauty. Although this cannot be denied, plaintiff contends that these features are only incidentally ornamental, and are primarily functional. The court does not agree.

Plaintiff asserts that the fringe on the kilts is functional because it protects the garment from wear, and allows the fringe to be replaced without discarding the garment. At trial, however, only Mr. Thompson testified that he had ever replaced the fringe on a kilt. Mr. Ferris testified that he had never replaced a fringe, nor been asked to do so by any of his customers. Mr. Banks stated that the fringe performs no function. Mr. Ferris opined that the fringe serves a utilitarian function because it prevents unraveling of the apron edge of the kilt. Close examination, however, will show that, rather than the fringe, it is the stitching over the edge of the apron that prevents unraveling. Additionally, both Mr. Ferris and Mr. Banks testified that they would consider the fringe on a woman's kilt, which is like that on a man's, to be decorative and nonfunctional.

A statement of this court from *Inter-Maritime Fwdg. Co., Inc.* v. *United States*, 69 Cust. Ct. 138, C.D. 4384 (1972), is particularly applicable here. In the *Inter-Maritime Fwdg.* case the question was whether scarves imported from Scotland, having fringe along the edges, and short, protruding weft threads on the sides, were ornamented. The court wrote:

> While there is evidence in the instant case that the fringe served to prevent or slow down fraying, the testimony and the sample indicate that its primary purpose was ornamental: To enhance the appearance and aesthetic appeal of the scarf. 69 Cust. Ct. at 144.

From an examination of the kilts and all of the testimony, it is the determination of the court that the fringe is primarily ornamental and only incidentally utilitarian.

It is also the determination of the court that the epaulets and braiding on the Sheriffmuir jacket are primarily ornamental. Plaintiff

ascribes three functions to the epaulets: holding the bonnet, securing the sword strap, and securing the plaid in such a manner that, if it is inadvertently pulled, the epaulet will be torn and not the jacket. All of the evidence presented indicates conclusively that these functions are not so important to the jacket as the decorative and ornamental effect created by the epaulets. Protecting the jacket from being torn by an accidental pull on the plaid is, at best, incidental, and not the primary function of the epaulets. The witnesses testified that the epaulets were of military origin and were used to hold plaid, sword, and bonnet. Other testimony establishes clearly that plaid, sword, and bonnet are not proper attire for all occasions on which Highland dress is worn. On most occasions when the jacket is worn the epaulets perform none of these functions. From all of the evidence the court concludes that the epaulets are not functional, and are retained primarily for their ornamental and decorative value.

Plaintiff does not claim that the braiding on the flaps and cuffs of the jacket is functional. Since it is agreed that the braid serves no function, other than ornamentation, the braiding renders the jacket ornamented for tariff purposes irrespective of any alleged functions performed by the epaulets.

Plaintiff nevertheless contends that the fringe, braid, and epaulets, whether or not currently functional, are traditional features of Scottish Highland dress, and that, therefore, articles of Highland dress decorated with these additions are excluded from being classified as "ornamented" for tariff purposes. In support of this assertion, plaintiff cites agency rulings in which the Customs Service has allowed particular garments with traditional features to be classified as "not ornamented." Even if the agency rulings cited by plaintiff suggest a different result in this case, and the court is not persuaded that they do, agency rulings are not binding on this court. *Ditbro Pearl Co., Inc.* v. *United States*, 515 F. 2d 1157, 62 CCPA 95 (1975); *C. J. Tower & Sons* v. *United States*, 33 Cust. Ct. 14, C.D. 1628 (1954). Here, the Customs officials have decided that the garments under consideration do not fall within the narrow exceptions that may have been allowed. Moreover, the classifications enjoy a presumption of correctness.

Although not cited by the parties, the court has also examined Customs classification decisions which dealt with the importation of certain ornamental costumes or apparel as "regalia." *Leo J. Doyle* v. *United States*, 44 Cust. Ct. 426, Abs. 64081 (1960); *Duquesne University Tamburitzans* v. *United States*, 41 Cust. Ct. 372, Abs. 62355 (1958): *Railway Express Agency* v. *United States*, 36 Cust. Ct. 452, Abs. 59971 (1956). These cases have considered the interpretation and application of paragraph 1773 of the Tariff Act of 1930, the predecessor provision to TSUS item 851.30. These provisions pertain

313-581 O - 80 - 2

to the duty-free importation of "regalia" by narrowly defined religious or other institutions. It is to be noted, however, that both under paragraph 1773 and the present provision, it is stated that the term "regalia" does not include regular wearing apparel. Moreover, plaintiff clearly does not qualify as one of the institutions enumerated under these provisions. The existence of the provisions indicates that Congress has considered the importation of traditional attire and, in some instances, has chosen to treat it specially. The present case, however, is not one of those instances.

In substance, plaintiff urges the court to hold that garments, having clearly ornamental features which may be traditional, are classifiable as "not ornamented" because the ornamentation is necessary to make the garment authentic. The court has found no statutory or decisional authority for such a holding. Traditional features, such as the fringe, braid, and epaulets, are retained when no longer functional because they enhance the aesthetic appeal and beauty of the garment. When features, whether or not traditional, are added to a garment primarily for purposes of decoration and ornamentation, the garment is "ornamented" within the meaning of the tariff schedules.

In view of the foregoing, it is the determination of the court that the kilts and the Sheriffmuir jacket were properly classified by the Customs officials as ornamented men's wearing apparel, of wool, and of cotton, respectively. The Customs classification is, therefore, sustained, and the complaint is dismissed.

Judgment will be entered accordingly.

Decisions of the United States Customs Court

Abstracts

Abstracted Protest Decisions

DEPARTMENT OF THE TREASURY, *February 25, 1980.*

The following abstracts of decisions of the United States Customs Court at New York are published for the information and guidance of officers of the customs and others concerned. Although the decisions are not of sufficient general interest to print in full, the summary herein given will be of assistance to customs officials in easily locating cases and tracing important facts.

ROBERT E. CHASEN,
Commissioner of Customs.

DECISION NUMBER	JUDGE & DATE OF DECISION	PLAINTIFF	COURT NO.	ASSESSED	HELD	BASIS	PORT OF ENTRY AND MERCHANDISE
				Par. or Item No. and Rate	Par. or Item No. and Rate		
P80/30	Rao, J. February 19, 1980	International Paint Co., Inc.	73-2-00595	Item 409.00 4¢ per lb. + 27%	Item 405.15 2¢ per lb. + 15%	Agreed statement of facts	Newark (New York) Arsenical paste for paint containing phenarsazine chloride, a benzenoid pesticide

DECISION NUMBER	JUDGE & DATE OF DECISION	PLAINTIFF	COURT NO.	ASSESSED	HELD	BASIS	PORT OF ENTRY AND MERCHANDISE
				Par. or Item No. and Rate	Par. or Item No. and Rate		
P80/31	Rao, J. February 19, 1980	Roger Gimbel Accessories	78-9-01650	Item 706.24 20%	Item 706.23 6.5%	Agreed statement of facts	Portland, Oreg. Linen bags
P80/32	Maletz, J. February 20, 1980	Dan Dee Imports, Inc.	79-5-00898	Item 737.20 17.5% (items marked "A" and "B")	Item 725.50 8% (items marked "A") Item A725.50 Free of duty under GSP, Trade Act of 1974 (items marked "B")	Amico, Inc. v. U.S. (C.A.D. 1214) (items "A" and "B")	New York Music boxes (items marked "A"); music boxes with revolving figurines, figures with musical movement, etc. (items marked "B")

Decisions of the United States Customs Court

Abstracts

Abstracted Reappraisement Decisions

DECISION NUMBER	JUDGE & DATE OF DECISION	PLAINTIFF	COURT NO.	BASIS OF VALUATION	HELD VALUE	BASIS	PORT OF ENTRY AND MERCHANDISE
R80/18	Re, C. J. February 19, 1980	Reynolds Trading Company	73-8-02279, etc.	Export value	Invoice unit values	C.B.S. Imports Corp. v. U.S. (C.D. 4739)	Los Angeles Bicycle parts
R80/19	Rao, J. February 19, 1980	Inter-Maritime Fwdg. Co., Inc.	R59/3108, etc.	Export value	F.o.b. unit invoice prices plus 20% of difference between f.o.b. unit invoice prices and appraised values	Agreed statement of facts	New York Ear sets
R80/20	Rao, J. February 19, 1 80	Manhattan Novelty Corp.	R58/6521, etc.	Export value	F.o.b. unit invoice prices plus 20% of difference between f.o.b. unit invoice prices and appraised values	Agreed statement of facts	New York Binoculars
R80/21	Rao, J. February 19, 1980	Manhattan Novelty Corp.	R60/0731	Export value	F.o.b. unit invoice prices plus 20% of difference between f.o.b. unit invoice prices and appraised values	Agreed statement of facts	San Francisco-Oakland Binoculars

DECISION NUMBER	JUDGE & DATE OF DECISION	PLAINTIFF	COURT NO.	BASIS OF VALUATION	HELD VALUE	BASIS	PORT OF ENTRY AND MERCHANDISE
R80/22	Rao, J. February 19, 1980	Manhattan Novelty Corp.	R61/5203, etc.	Export value	F.o.b. unit invoice prices plus 20% of difference between f.o.b. unit invoice prices and appraised values	Agreed statement of facts	New York Binoculars
R80/23	Re, C.J. February 20, 1980	Mersco Wholesale Co., Inc.	76-5-01069	Export value	U.S. $32.45, $28.65 and $28.40 per doz., pkd. (Style Nos. M-485, L-4059, L-4059M) (currency fluctuation additions improper)	C.B.S. Imports Corp. v. U.S. (C.D. 4739)	New York Knit wearing apparel
R80/24	Rao, J. February 20, 1980	Charmilles Corp. of America	75-4-00881	United States value	Determined by adding to f.o.b. unit invoice price in Swiss francs converted to a dollar value at fixed rate of exchange as shown on special customs invoice in entry documents (the "claimed value"), 53% of difference between claimed value and appraised value	Agreed statement of facts	New York Machine tools and accessories and parts thereof
R80/25	Rao, J. February 20, 1980	House of Adler, Inc.	78-7-01345	Export value	Invoiced unit value, and, where applicable, less air mail, assay, and insurance charges, net packed	Agreed statement of facts	Honolulu Loose diamonds

R80/26	Rao, J. February 20, 1980	Merit International Corp.	74-10-02770	Export value	Various f.o.b. invoice prices as shown in entry documents, net packed, without additions which were included in appraised values to reflect currency valuation	C.B.S. Imports Corp. v. U.S. (C.D. 4739)	Boston Tape players, stereo sets, speakers, etc.
R80/27	Rao, J. February 21, 1980	Manhattan Novelty Corp.	297068-A, etc.	Export value	F.o.b. unit invoice prices plus 20% of difference between f.o.b. unit invoice prices and appraised values	Agreed statement of facts	New York Binoculars
R80/28	Rao, J. February 21, 1980	Selsi Co., Inc.	278406-A, etc.	Export value	F.o.b. unit invoice prices plus 20% of difference between f.o.b. unit invoice prices and appraised values	Agreed statement of facts	New York Binoculars

Judgment of the U.S. Customs Court in Appealed Case

FEBRUARY 22, 1980

APPEAL 79-23.—Pharmacia Laboratories, Inc. *v.* United States.—RADIOIMMUNOASSAY TESTING KITS—OTHER ARTICLES NOT PROVIDED FOR ELSEWHERE IN TARIFF SCHEDULES—CHEMICAL COMPOUNDS WHICH ARE USEFULLY RADIOACTIVE—TSUS.—C.D. 4798 affirmed November 15, 1979 (C.A.D. 1235).

Appeal to U.S. Court of Customs and Patent Appeals

APPEAL 80-18.—Edge Import Corp. *v.* United States.—HUNTING KNIVES—KNIVES, OTHER—STAG HANDLE AND WOOD HANDLE KNIVES—TSUS. Appeal from C.D. 4832.

In this case the Customs Court held that imported knives with metal pommels and metal guards were properly classified under the provision in item 650.21, Tariff Schedules of the United States, as modified by T.D. 68-9, for knives with their handles, other, with duty at the rate of 0.5 cent each plus 8.5 percent ad valorem. Plaintiff-appellant claimed the knives containing stag horn in their handles were properly classifiable under the provision in item 650.13, as modified by T.D. 68-9, for knives with animal horn handles, and the knives containing wood in their handles were properly classifiable under the provision in item 650.19, as modified by T.D. 68-9, for hunting knives with wood handles, dutiable at the rates of 2 cents each plus 6 percent (item 650.13) and 1 cent each plus 6 percent (item 650.19).

In its notice of appeal to the Court of Customs and Patent Appeals, appellant submitted the following statement of errors and fact:

1. Imported hunting knives with stag and wooden cover materials are stag handle and wood handle knives.

2. Imported hunting knives with stag and wooden cover materials were improperly classified under TSUS 650.21. These knives are properly classified under TSUS item 650.13 or 650.19, respectively.

Decisions on Petitions for Rehearings Before the U.S. Court of Customs and Patent Appeals

FEBRUARY 21, 1980

APPEAL 79-15.—ASG Industries, Inc., et al. *v.* United States.—AMERICAN MANUFACTURERS' ACTION—FLOAT GLASS—BOUNTIES OR GRANTS—COUNTERVAILING DUTIES—SUMMARY JUDGMENT.—C.D. 4782 reversed and remanded November 29, 1979 (C.A.D. 1237). Petition for rehearing filed by appellee on January 10, 1980, denied; C.A.D. 1237 modified by adding footnote 16.5 on page 18.

APPEAL 79-16.—ASG Industries, Inc., et al. *v.* United States.—AMERICAN MANUFACTURERS' ACTION—FLOAT GLASS—BOUNTIES OR GRANTS—COUNTERVAILING DUTIES—SUMMARY JUDGMENT.—C.D. 4788 reversed and remanded November 29, 1979 (C.A.D. 1238). Petition for rehearing filed by appellee on January 10, 1980, denied.

APPEAL 79-18.—Schott Optical Glass, Inc. *v.* United States.—COLOR FILTER GLASS—OPTICAL GLASS—COLORED OR SPECIAL GLASS—TSUS.—C.D. 4783 affirmed December 20, 1979 (C.A.D. 1239). Petition for rehearing filed by appellant on January 10, 1980, denied.

International Trade Commission Notices

Investigations by the U.S. International Trade Commission

DEPARTMENT OF THE TREASURY

The appended notices relating to investigations by the U.S. International Trade Commission are published for the information of Customs officers and others concerned.

R. E. CHASEN,
Commissioner of Customs.

In the Matter of CERTAIN INCLINED-FIELD ACCELERATION TUBES AND COMPONENTS THEREOF	Investigation No. 337-TA-67

Notice of Commission Hearing on the Presiding Officer's Recommended Summary Determination

Recommendation of the presiding officer.—On January 10, 1980, the presiding officer certified to the U.S. International Trade Commission a recommended summary determination of the Commission's investigation under section 337 of the Tariff Act of 1930 (19 U.S.C. 1337) of alleged unfair methods of competition and unfair acts in the importation and sale of certain inclined-field acceleration tubes and components thereof in the United States. On motion of respondent Dowlish Developments, Ltd., the presiding officer recommended that the Commission—

(1) Find that there is no genuine issue of material fact that must be decided in this case;

(2) Find that, based on the pleadings, affidavits, depositions, and admissions on file, respondent Dowlish is entitled to summary determination as a matter of law; and

(3) Terminate the investigation as to all respondents.

The presiding officer certified the evidentiary record to the Commission for its consideration. Copies of the presiding officer's recommendation and all other public documents may be obtained by contacting the Office of the Secretary to the Commission, 701 E Street NW., Washington, D.C. 20436; telephone 202-523-0161.

Commission hearing scheduled.—The Commission will hear oral argument on the recommended determination beginning at 10 a.m., e.s.t., on March 12, 1980, in the Commission's hearing room (room 331), 701 E Street NW., Washington, D.C. 20436. A party to the Commission's investigation or an interested agency wishing to present to the Commission an oral argument concerning the presiding officer's recommendation will be limited to 30 minutes. A party or interested agency may reserve 10 minutes of its time for rebuttal. The oral arguments will be held in this order: Complainant, respondents, other government agencies, Commission investigative attorney.

How to participate in the hearing.—Any person desiring to appear at the Commission's hearing must file a written request to appear with the Secretary to the U.S. International Trade Commission, 701 E Street NW., Washington, D.C. 20436, no later than the close of business (5:15 p.m., e.s.t.) on March 7, 1980. Only parties to the Commission's investigation, interested agencies, and the Commission investigative staff may present an oral argument concerning the presiding officer's recommended determination.

Written submissions to the Commission.—Parties to the Commission's investigation, interested agencies, and the Commission investigative staff are encouraged to file briefs concerning exceptions to the presiding officer's recommendation. Briefs must be served on all parties of record to the Commission's investigation on or before the date they are filed with the Secretary. Statements made in briefs should be supported by references to the record. The Commission requests that written submissions be filed no later than the close of business on March 24, 1980.

Additional information.—The original and 19 true copies of all briefs and written comments and any written request to participate must be filed with the Secretary to the Commission.

Any person desiring to discuss confidential information at the hearing shall request the Chairman to direct that a portion of the hearing be held in camera. Documents containing confidential information which has been previously submitted subject to the protective order in this investigation will be treated accordingly. Documents containing information which has not been previously submitted as confidential subject to the protective order will be treated as confidential only upon a written request directed to the Secretary which includes a full statement of the reasons why the

Commission should grant such treatment. All nonconfidential written submissions will be open to public inspection at the Secretary's office.

Notice of the Commission's investigation was published in the Federal Register of June 27, 1979 (44 F.R. 37567).

By order of the Commission.

Issued: February 25, 1980.

KENNETH R. MASON,
Secretary.

303-TA-13 (Preliminary)

CERTAIN PUBLIC WORKS CASTINGS FROM INDIA

Notice of Institution of Preliminary Countervailing Duty Investigation and Scheduling of Conference

Investigation instituted.—Following receipt of a petition on February 19, 1980, filed by Pinkerton Foundry, Inc., Lodi, Calif., a domestic producer of cast gray-iron articles, the U.S. International Trade Commission of February 21, 1980, instituted a preliminary countervailing duty investigation under section 303 of the Tariff Act of 1930, as amended by section 103(b) of the Trade Agreements Act of 1979, to determine whether there is a reasonable indication that an industry in the United States is materially injured, or is threatened with material injury, or the establishment of an industry in the United States is materially retarded, by reason of allegedly subsidized imports from India of manhole covers, and frames, catch basin grates and frames, and cleanout covers and frames provided for in item 657.09 of the Tariff Schedules of the United States. This investigation will be subject to the provisions of part 207 of the Commission's Rules of Practice and Procedure (19 CFR 207, 44 F.R. 76457) and, particularly, subpart B thereof, effective January 1, 1980.

Written submissions.—Any person may submit to the Commission on or before March 20, 1980, a written statement of information pertinent to the subject matter of the investigation. A signed original and 19 copies of such statements must be submitted.

Any business information which a submitter desires the Commission to treat as confidential shall be submitted separately and each sheet must be clearly marked at the top "Confidential business data." Confidential submissions must conform with the requirements of section 201.6 of the Commission's Rules of Practice and Procedure (19 CFR 201.6). All the written submissions, except for confidential business data, will be available for public inspection.

Conference.—The Director of Operations of the Commission has scheduled a conference in connection with the investigation for 10 a.m., e.s.t., on Monday, March 17, 1980, at the U.S. International Trade Commission Building, 701 E Street NW., Washington, D.C. Parties wishing to participate in the conference should contact the senior investigator for the investigation, Mr. Thomas St. Maxens, 202-523-0267. It is anticipated that parties in support of the petition for countervailing duties and parties opposed to such petition will each be collectively allocated 1 hour within which to make an oral presentation at the conference. Further details concerning the conduct of the conference will be provided by the senior investigator.

Inspection of petition.—The petition filed in this case is available for public inspection at the Office of the Secretary, U.S. International Trade Commission, and at the New York City office of the U.S. International Trade Commission located at 6 World Trade Center.

Issued: February 22, 1980.

KENNETH R. MASON,
Secretary.

In the Matter of CERTAIN CATHODE SPUTTER-COATED GLASS TRANSPARENCIES	Investigation No. 337-TA-79

Notice of Investigation

Notice is hereby given that a complaint was filed with the U.S. International Trade Commission on January 14, 1980, and amended on February 12, 1980, under section 337 of the Tariff Act of 1930 (19 U.S.C. 1337), on behalf of PPG Industries, Inc., 1 Gateway Center, Pittsburgh, Pa. 15272, alleging that unfair methods of competition and unfair acts exist in the importation into the United States of certain cathode sputter-coated glass transparencies, or in their sale, because such cathode sputter-coated glass transparencies are allegedly prepared by a process covered by claims 1-11 of U.S. Letters Patent 4,094,763. The complaint alleges that the effect or tendency of the unfair methods of competition and unfair acts is to destroy or substantially injure an industry, efficiently and economically operated, in the United States.

Complainant requests that the Commission order permanent exclusion of the imports after a full investigation has been conducted.

Having considered the complaint, the Commission on February 12, 1980, ordered that—

(1) Pursuant to subsection (b) of section 337 of the Tariff Act of 1930, (19 U.S.C. 1337), and pursuant to 19 U.S.C. 1337(a), an investi-

gation be instituted to determine whether there is a violation of subsection (a) of this section in the unauthorized importation of certain cathode sputter-coated glass transparencies or in their sale, because of the alleged preparation of such cathode sputter-coated glass transparencies by a process covered by claims 1–11 of U.S. Letters Patent 4,094,763, the effect or tendency of which is to destroy or substantially injure an industry, efficiently and economically operated, in the United States;

(2) For the purpose of this investigation so instituted, the following are hereby named as parties upon which this notice of investigation shall be served:

(a) The complainant is—

PPG Industries, Inc.
1 Gateway Center
Pittsburgh, Pa. 15272

(b) The respondents are the following companies alleged to be engaged in the unauthorized importation of certain cathode sputter-coated glass transparencies, into the United States, or in their sale, and are parties upon which the complaint is to be served:

Triplex Safety Glass Co., Ltd.
1 Eckersall Road
Kings Norton
Birmingham B38 8SR, England (UK)

British Aerospace, Inc.
13850 McClearen Road
Dallas Industrial Aerospace Park
Herndon, Va. 22070

(c) Wilhelm A. Zeitler, U.S. International Trade Commission, 701 E Street NW., Washington, D.C. 20436, is hereby named Commission investigative attorney, a party to this investigation; and

(3) For the investigation so instituted, Chief Administrative Law Judge Donald K. Duvall, U.S. International Trade Commission, 701 E Street NW., Washington, D.C. 20436, shall designate the presiding officer.

Responses must be submitted by the named respondents in accordance with section 210.21 of the Commission's Rules of Practice and Procedure (19 CFR 210.21). Pursuant to sections 201.16(d) and 210.21(a) of the rules, such responses will be considered by the Commission if received not later than 20 days after the date of service of the complaint. Extensions of time for submitting a response will not be granted unless good and sufficient cause therefor is shown.

Failure of a respondent to file a timely response to each allegation in the complaint and in this notice may be deemed to constitute a waiver of the right to appear and contest the allegations of the complaint and this notice, and to authorize the presiding officer and the Commission, without further notice to the respondent, to find the facts to be as alleged in the complaint and this notice and to enter

both a recommended determination and a final determination containing such findings.

The complaint is available for inspection by interested persons at the Office of the Secretary, U.S. International Trade Commission, 701 E Street NW., Washington, D.C. 20436, and in the Commission's New York City office, 6 World Trade Center, New York, N.Y. 10048.

By order of the Commission.

Issued: February 22, 1980.

KENNETH R. MASON,
Secretary.

In the Matter of CERTAIN PLASTIC BOUQUET HOLDERS	Investigation No. 337-TA-80

Notice of Investigation

Notice is hereby given that a complaint was filed with the U.S. International Trade Commission on January 18, 1980, and amended on February 7, 1980, under section 337 of the Tariff Act of 1930 (19 U.S.C. 1337), on behalf of Lomey Manufacturing Corp., 301 Suburban Avenue, Deer Park, N.Y. 11729, alleging that unfair methods of competition and unfair acts exist in the importation into the United States of certain plastic bouquet holders, or in their sale, because such plastic bouquet holders are allegedly covered by claims 1-4 of U.S. Letters Patent 3,576,699. The complaint alleges that the effect or tendency of the unfair methods of competition and unfair acts is to destroy or substantially injure an industry, efficiently and economically operated, in the United States.

Complainant requests that, after a full investigation has been conducted, the Commission order exclusion of the imports in question and such other and further relief as it may deem appropriate. The complainant has also requested that a temporary exclusion order be issued during the pendency of the investigation.

Named as a proposed respondent in the complaint is Sal Spitz Co., Inc. The Commission has also named International Artware Corp. as a party respondent based upon the informal investigation by the Commission investigative attorney. The investigation revealed that International Artware Corp. had allegedly imported plastic bouquet holders of a type alleged to infringe claims 1-4 of U.S. Letters Patent 3,576,699.

Having considered the complaint as amended and the investigatory memorandum, the Commission, on February 19, 1980, ordered that—

(1) Pursuant to subsection (b) of section 337 of the Tariff Act of

1930 (19 U.S.C. 1337), an investigation be instituted to determine whether there is reason to believe that there is a violation of subsection (a) of the section in the unauthorized importation of certain plastic bouquet holders and components thereof into the United States, or in their sale, because of the alleged infringement by such plastic bouquet holders of claims 1–4 of U.S. Letters Patent 3,576,699, the effect or tendency of which is to destroy or substantially injure an industry, efficiently and economically operated, in the United States;

(2) For the purposes of the investigation so instituted, the following are named as parties upon which this notice of investigation shall be served:

(a) The complainant is—

Lomey Manufacturing Corp.
301 Suburban Avenue
Deer Park, N.Y. 11729

(b) The respondents are the following companies alleged to be engaged in the unauthorized importation of certain plastic bouquet holders into the United States, or in their sale, and are the parties upon which the complaint is to be served—

Sal Spitz Co., Inc. 120 Broadway Garden City Park, N.Y. 11040	International Artware Corp. 1999 Enterprise Parkway Twinsburg, Ohio 44087

(c) Louis S. Mastriani, U.S. International Trade Commission, 701 E Street NW., Washington, D.C. 20436, is hereby named Commission investigative attorney, a party to this investigation; and

(3) For the investigation so instituted, Chief Administrative Law Judge Donald K. Duvall, U.S. International Trade Commission, 701 E Street NW., Washington, D.C. 20436, shall designate the presiding officer.

The phrase "and components thereof" has been added to paragraph (1) above on the basis of the informal investigatory activities by the Commission investigatory attorney which revealed that the plastic bouquet holders of the type alleged to infringe claims 1–4 of U.S. Letters Patent No. 3,576,699 can be imported in component parts rather than entirely assembled.

Responses must be submitted by the named respondents in accordance with section 210.21 of the Commission's Rules of Practice and Procedure (19 C.F.R. 210.21). Pursuant to sections 201.16(d) and 210.21(a) of the rules, such responses will be considered by the Commission if received not later than 20 days after the date of service of the complaint. Extensions of time for submitting a response will not be granted unless good and sufficient cause therefor is shown.

Failure of a respondent to file a timely response to each allegation in the complaint and in this notice may be deemed to constitute a waiver

of the right to appear and contest the allegations of the complaint and this notice, and to authorize the presiding officer and the Commission, without further notice to the respondent, to find the facts to be as alleged in the complaint and this notice and to enter both a recommended determination and a final determination containing such findings.

The complaint as amended is available for inspection by interested persons at the Office of the Secretary, U.S. International Trade Commission, 701 E Street NW., Washington, D.C. 20436, and in the, Commission's New York office, 6 World Trade Center, New York, N.Y. 10048.

By order of the Commission.

Issued: February 29, 1980.

KENNETH R. MASON,
Secretary.

Proposed Rule Requiring Country-of-Origin Marking of Imported Steel Wire Rope

AGENCY: U.S. International Trade Commission.

ACTION: Proposed substantive rule under section 337.

SUMMARY: Comments are solicited on the general question of the promulgation of substantive rules by the U.S. International Trade Commission under 19 U.S.C. section 1337 and on the specific rule proposed requiring country-of-origin marking of imported steel wire rope. The Commission is considering the issuance of a substantive rule specifying the country-of-origin markings required in the sale and distribution of imported steel wire rope. Under section 337 of the Tariff Act of 1930 (19 U.S.C. 1337), the Commission is provided with the authority to take action against certain "unfair methods of competition and unfair acts in the importation of articles into the United States, or in their sale by the owner, importer, consignee, or agent or either, the effect or tendency of which is to destroy or substantially injure an industry, efficiently and economically operated, in the United States, or to prevent the establishment of such an industry, or to restrain or monopolize trade and commerce in the United States." The proposed rule defines practices which would be deemed unfair methods of competition and unfair acts under section 337 with respect to the country-of-origin marking of imported steel wire rope. The term "steel wire rope" is broadly defined to encompass steel cordage products, except strand, and certain fabricated assemblies.

DATES: Comments on the proposed rule and on the promulgation of substantive rules by the Commission under section 337 must be re-

ceived on or before (60 days after publication). If the Commission is convinced that the proposal has merit, a public hearing will be scheduled after the end of the period for public comment.

ADDRESS: Written comments and requests to participate in the oral hearing should be addressed to: Kenneth R. Mason, Secretary, U.S. International Trade Commission, 701 E Street NW., Washington, D.C. 20436. Copies of comments received are available for public inspection at the Secretary's Office, U.S. International Trade Commission.

FOR FURTHER INFORMATION CONTACT: Donald R. Dinan, Office of Legal Services, room 321, U.S. International Trade Commission, 701 E Street NW., Washington, D.C. 20436; telephone 202-523-0488.

SUPPLEMENTARY INFORMATION:

BACKGROUND

The U.S. International Trade Commission has been requested by the Committee of Domestic Steel Wire Rope and Specialty Cable Manufacturers to promulgate a trade regulation rule defining what constitutes an unfair practice cognizable under section 337 of the Tariff Act of 1930 with respect to the importation and sale of steel wire rope. Such action by this Commission has been requested to correct and prevent alleged unfair practices relating to the country-of-origin labeling of imported steel wire rope.

The Commission's Office of Legal Services (OLS) has conducted an informal inquiry into marking practices in the sale of imported steel wire rope within the United States. This investigation has uncovered numerous instances of mismarking or failure to mark the country of origin on imported steel wire rope or on its containers or holders.

The OLS has also learned in its informal inquiry that a significant proportion of U.S. purchasers and users of steel wire rope normally believe that the steel wire rope which they purchase is of domestic manufacture unless it is otherwise marked. Although the initial purchaser from an importer might be orally advised that the steel wire rope is of foreign manufacture, such notice of origin is frequently not passed on to subsequent purchasers. Moreover, it has been alleged that many end users of steel wire rope have a clear preference for the domestically produced product because of perceived quality differences as well as differences in the handling of product liability claims and servicing subsequent to purchase.

Although it appears that upon importation there are country-of-origin tags attached to the reels of most foreign-produced steel wire rope, these tags are often subsequently either accidentally or intentionally removed. Furthermore, the common practice of respooling steel

wire rope for distribution and sale in the United States after it has been imported often results in the rope being sold to subsequent purchasers without any indication of origin, since such marking was only on the original shipping reel. Steel wire rope is also sold in coils or lengths that typically do not indicate the origin of the product.

Foreign-produced steel wire rope is offered by importers and distributors and sold through the use of sales literature, such as price lists, which in many cases does not disclose the country of origin of the rope. Absent oral disclosure, there is no way of telling whether one is buying a foreign or domestically produced product. This problem is compounded by the fact that once the steel wire rope is received shipping documents such as invoices normally fail to indicate the place of manufacture of the rope.

Purchasers with a preference for domestically produced steel wire rope may try to avoid these problems by specifying that the steel wire rope they order be of domestic manufacture. It has been alleged that this practice of failure to indicate country of origin on the product itself or on its containers or holders has aided certain importers and distributors of imported steel wire rope in affirmatively deceiving these purchasers. The OLS has been advised of cases in which foreign-produced steel wire rope allegedly has been offered for sale and sold as domestic rope. Other alleged intentional misrepresentations that have been reported include instances in which foreign steel wire rope has been purposely placed on domestic manufacturers' reels and where falsified domestic mill certificates have been furnished with foreign-produced steel wire rope.

Domestically produced steel wire rope usually contains a colored strand marker which is made by impregnating a strand of the rope with a colored grease. Most if not all, of these colored strand markers are registered trademarks of specific domestic steel wire rope manufacturers. Instances in which foreign-produced steel wire rope containing colored strand markers similar, if not identical, to those of domestic manufacturers, have also been reported.

All of the above-mentioned examples of alleged unintentional and intentional misrepresentation may have the capacity, tendency, and effect of misleading and deceiving purchasers and prospective purchasers. An affirmative indication of the origin of the product would thus appear to be the only means of informing purchasers and prospective purchasers as to the origin of the rope.

These instances which have been disclosed and investigated in the Commission's informal inquiry would, if proven to exist, constitute unfair methods of competition and unfair acts within the meaning of section 337(a) of the Tariff Act of 1930. Furthermore, in many instances such failure to inform purchasers and prospective purchasers

of the origin of the product has resulted in lost sales of domestic steel wire rope. Therefore, it would appear that should such unfair acts and unfair methods of competition be proven it may be further shown that such practices would have the effect or tendency of causing injury to the domestic steel wire rope industry within the meaning of the statute. Moreover, such unfair behavior in the sale of imported steel wire rope constitutes a distortion of the competitive process and thus might be considered a restraint of trade and commerce in the United States under section 337.

Although substantive rulemaking is no longer a novelty in the practice of administrative law, this Commission has not previously employed it. The authority of the U.S. International Trade Commission to issue substantive rules is found in the Commission's general rulemaking statute, 19 U.S.C. 1335, which enpowers the Commission to "adopt such reasonable procedures and rules and regulations as it deems necessary to carry out its functions and duties."

The proposed rule could be found necessary by the Commission to carry out its functions of investigating and remedying alleged violations of section 337, and would have the effect of substantive law. Thus, should a subsequent adjudicative determination under section 337 find that a respondent has committed acts or practices in violation of the rule, the respondent might be found in violation of section 337 and be subject to any or all of the remedies provided thereunder. A respondent in such an enforcement proceeding would nevertheless be given the opportunity to argue that the rule should not be applied to it under the particular facts of such case.

The Commission believes that the proposed rule could be found to be the most equitable, effective, and least burdensome way to remedy the alleged widespread problem of deceptive labeling of imported steel wire rope. The proposed rule is intended to provide a clear standard in the day-to-day sale, offer for sale, and distribution of imported steel wire rope. This may be a more efficient, cost-effective remedy than case-by-case adjudication.

After review and analysis of the General Counsel's recommendations, the Commission determines that the proposed substantive rule is significant within the meaning of 19 CFR 212.100–3, proposed simultaneously herewith, because compliance with it is, by causing a shift in consumption to domestic products, likely to have a substantial impact on competitive conditions of imported steel wire rope. Absent a showing of such a substantial impact, it is unlikely that the petitioner will be able to comply with the injury or restraint-of-trade requirements of section 337. This proposed substantive rule does not require a regulatory analysis under proposed 19 CFR 212.100–4.

PROPOSED RULE

It is proposed that the following amendment be made to 19 CFR, chapter II, subchapter C—Adjudicative investigations.

A new part 212 would be added, containing subparts A and B as follows:

PART 212—SUBSTANTIVE RULES FOR USE IN ADJUDICATIVE INVESTIGATIONS

Subpart A—General Provision for Rulemaking Procedures [Proposed simultaneously herewith]
Subpart B—Rules

SUBPART B—RULES

212.200 Country-of-Origin Marking of Imported Steel Wire Rope
212.200–1 Scope
212.200–2 Product Definition
212.200–3 Proscribed Conduct
212.200–4 Interpretation
212.200–5 Amendment
212.200–6 Violation

AUTHORITY: Sec. 335, 337, Tariff Act of 1930 (19 U.S.C. 1335, 1337).

212.200–1 Scope

This rule is intended to have the effect of substantive law. If a subsequent adjudicative determination is made under section 337 of the Tariff Act of 1930 (19 U.S.C. 1337) that a respondent has committed an unfair practice in violation of this rule, respondent may be found in violation of section 337 and be subject to any or all of the statutory remedies provided by that section.

The rule shall be interpreted to effectuate its remedial purpose, and in that regard, shall be interpreted to have a broad scope. All persons, firms, corporations, organizations, and business entities which distribute or sell foreign-produced steel wire rope at all stages of commerce up to and including sale or distribution to the ultimate consumer of the product fall within this rule.

212.200–2 Product Definition

Steel wire rope.—Ropes, cables, and cordage (except strand), all the foregoing of iron or steel wire, whether or not cut to length, and whether or not fitted with hooks, swivels, clamps, clips, thimbles, sockets, rings, or other fittings, or made up into slings, cargo nets, or similar fabricated assemblies consisting primarily (by value, weight, of mass) of iron or steel wire rope or cable, and not covered with brass, or textile or other nonmetallic material.

212.200–3 Proscribed Conduct

It shall be an unfair method of competition and an unfair act within the meaning of section 337 of the Tariff Act 1930:

a. To fail to disclose the country of manufacture on any invoices, promotional materials, price lists, or other documents

used in connection with, sales, offers to sell, or distribution of foreign-produced steel wire rope in the United States.

b. To fail to disclose the country of origin of foreign-produced steel wire rope on either the product itself or on the reel, spool or other holder or container of the product, when selling, offering for sale or distributing such product in the United States.

c. To make any express or implied representation to any purchaser or prospective purchaser of steel wire rope in the United States that foreign-produced steel wire rope is of domestic origin.

d. To import, sell, offer to sell, and/or distribute foreign-produced steel wire rope in the United States with a colored strand marker which infringes a registered U.S. trademark or otherwise has a tendency to mislead purchasers as to the origin of the product.

212.200–4 Interpretation

a. This rule is to be interpreted as a whole. However, if any part is found invalid, it will not affect the validity of the other parts.

b(1). The U.S. International Trade Commission will aid in the interpretation of this rule by issuing advisory opinions when requested to do so. Advisory opinions may be relied upon by the person requesting such opinion until, if ever, such opinion is revoked.

b(2). In amending or revoking advisory opinions issued hereunder the U.S. International Trade Commission will do so by rule pursuant to 5 U.S.C. section 553 (1976). If the Commission deems it necessary, it may afford the parties an opportunity to provide oral testimony.

212.200–5 Amendment

a. Upon request of any party, or upon its own initiative, the U.S. International Trade Commission may initiate a rulemaking proceeding in conformity with 5 U.S.C. 553 and its own rules to modify, amend or revoke this rule.

b. In considering whether to institute a rulemaking proceeding to amend, modify or revoke this rule, the Commission will consider the possible effects of the requested action on the overall purpose of the rule.

212.200–6 Violation

a. Upon a complaint by any person alleging a violation of this rule and otherwise conforming with 19 CFR section 210.20, or upon its own initiative, the Commission shall institute an investigation under section 337 of the Tariff Act of 1930, for the purpose of determining (1) whether there has been violation of this rule, and (2) whether the application of this rule to the particular facts of such case should be waived. Such investigation shall be conducted in accordance with the Rules of Practice and Procedure governing adjudicative investigations. (19 CFR part 210).

b. If a violation of the rule is found to exist by the Commission, it shall take such remedial action that it deems appropriate pursuant to subsections (d), (e), and/or (f) of section 337, unless,

after considering the effect of such relief upon the public health and welfare, competitive conditions in the United States economy, the production of like or directly competitive articles in the United States, and United States consumers, it finds that such remedy should not be ordered.

c. Commission determinations of a violation of section 337 by reason of a violation of this rule and the action taken thereunder are subject to presidential review pursuant to subsection (g) of section 337, and are appealable to the Court of Customs and Patent Appeals pursuant to subsection (c) of section 337.

By order of the Commission.

Issued: February 20, 1980.

KENNETH R. MASON,
Secretary.

Index

U.S. Customs Service

Treasury decisions:
Foreign currencies:

	T.D. No.
Daily certified rates; February 11–15, 1980	80–77
Daily certified rates; February 18–22, 1980	80–78
Rates which varied from quarterly rate; February 13–15, 1980	80–79
Rates which varied from quarterly rate; February 22, 1980	80–80
Cotton textile products—Pakistan	80–81

Customs Court

Agency rulings as precedent, C.D. 4844
Appeal to U.S. Court of Customs and Patent Appeals (p. —);
Appeal 80–18—Hunting knives; knives, other; stag handle and wood handle knives; TSUS
Construction:
Tariff Act of 1930, par. 1773, C.D. 4844
Tariff Schedules of the United States:
Item 380.00, C.D. 4844
Item 380.02, C.D. 4844
Item 380.12, C.D. 4844
Item 380.66, C.D. 4844
Schedule 3:
Headnote 3, C.D. 4844
Part 6, subpart F, C.D. 4844
Definition:
Ornamented, C.D. 4844
Ornamented wearing apparel, C.D. 4844
Evidence; samples, C.D. 4844
Exhibits, illustrative; ornamentation issue, C.D. 4844
Highland dress, articles of, C.D. 4844
Illustrative exhibits, C.D. 4844
Jacket:
Argyll, C.D. 4844
Sheriffmuir, C.D. 4844
Judgment in appealed case (p. —):
Appeal 79–23—Radioimmunoassay testing kits; other articles not provided for elsewhere in tariff schedules; chemical compounds which are usefully radioactive; TSUS
Kilts, men's, C.D. 4844
Men's wearing apparel:
Not ornamented, C.D. 4844

Men's wearing apparel—Continued
Ornamented:
Of cotton, C.D. 4844
Of wool, C.D. 4844
Ornamentation:
Issue; exhibits, illustrative, C.D. 4844
Primary purpose of fringe, braid or epaulets, C.D. 4844
Ornamented:
Men's wearing apparel, of wool and of cotton; Scottish Highland jackets and kilts, C.D. 4844
Wearing apparel; definition, C.D. 4844
Primary purpose of fringe, braid or epaulets; ornamentation, C.D. 4844
Rehearings denied (p.—); U.S. Court of Customs and Patent Appeals:
Appeals:
79-15—American manufacturers' action; float glass; bounties or grants; countervailing duties; summary judgment
79-16—American manufacturers' action; float glass; bounties or grants; countervailing duties; summary judgment
78-18—Color filter glass; optical glass; colored or special glass; TSUS
Samples; evidence, C.D. 4844
Scottish Highland jackets and kilts; ornamented men's wearing apparel, of wool and of cotton, C.D. 4844
Words and phrases:
Ornamented, C.D. 4844
Regalia, C.D. 4844

U. S. GOVERNMENT PRINTING OFFICE : 1980 O - 313-591

MAR 27 1980

Item 950-D T1.11/3:14/13
contin/p

Customs Bulletin

Regulations, Rulings, Decisions, and Notices concerning Customs and related matters

and Decisions

of the United States Court of Customs and Patent Appeals and the United States Customs Court

313-582
350

Vol. 14

MARCH 26, 1980

No. 13

9247

This issue contains

T.D. 80–82 through 80–85
General Notice
C.D. 4845
Protest abstracts P80/33 through P80/38
Reap. abstracts R80/29
International Trade Commission Notice

THE DEPARTMENT OF THE TREASURY
U.S. Customs Service

N.D.

NOTICE

The abstracts, rulings, and notices which are issued weekly by the U.S. Customs Service are subject to correction for typographical or other printing errors. Users may notify the U.S. Customs Service, Logistics Management Division, Washington, D.C. 20229, of any such errors in order that corrections may be made before the bound volumes are published.

For sale by the Superintendent of Documents, U.S. Government Printing Office, Washington, D.C. 20402. Price: $1.30 (single copy domestic); $1.65 (single copy foreign). Subscription price: $65.00 a year domestic; $81.25 a year foreign.

U.S. Customs Service

Treasury Decisions

(T.D. 80–82)

Bonds

Approval and discontinuance of consolidated aircraft bonds (air carrier blanket bonds) Customs form 7605

The following consolidated aircraft bonds have been approved or discontinued as shown below. The symbol D indicates that the bond previously outstanding has been discontinued on the month, day, and year represented by the figures which follow. PB refers to a previous bond, dated as represented by figures in parentheses immediately following, which has been discontinued. If the previous bond was in the name of a different company or if the surety was different, the information is shown in a footnote at the end of the list.

Dated: March 10, 1980.

Name of principal and surety	Date term commences	Date of approval	Filed with district director of Customs; amount
Air New Zealand, Ltd., 510 West 6th St., Los Angeles, CA; St. Paul Fire & Marine Ins. Co. (PB 12/9/77) D 2/21/80 [1] The foregoing principal has been designated as a carrier of bonded merchandise.	Dec. 9, 1979	Feb. 21, 1980	Honolulu, HI; $100,000
Cargolux Airlines International S.A., 905 16th St., NW, Washington, D.C.; Investors Insurance Company of America The foregoing principal has been designated as a carrier of bonded merchandise.	Jan. 18, 1980	Feb. 11, 1980	Miami, FL; $100,000

BON–3–01

[1] Surety is Hartford Accident and Indemnity Co.

ALFRED G. SCHOLLE,
Director, Carriers, Drawback and Bonds Division.

(T.D. 80-83)

Fish—Tariff-Rate Quota

Tariff-rate quota for the calendar year 1980, on fish dutiable under item 110.50, Tariff Schedules of the United States (TSUS)

AGENCY: U.S. Customs Service, Department of the Treasury.

ACTION: Announcement of the quota quantity on certain fish for calendar year 1980.

SUMMARY: The tariff-rate quota for fish pursuant to item 110.50, TSUS, for the 1980 calendar year is 45,241,035 pounds.

EFFECTIVE DATES: The 1980 tariff-rate quota is applicable to fish described in item 110.50, TSUS, which are entered, or withdrawn from warehouse, for consumption during calendar year 1980.

FOR FURTHER INFORMATION CONTACT: Helen C. Rohrbaugh, Head, Quota Section, Duty Assessment Division, Office of Commercial Operations, U.S. Customs Service, Washington, D.C. 20229; 202-566-8592.

SUPPLEMENTARY INFORMATION: This tariff-rate quota for fish is equal to 15 percent of the average aggregate apparent annual consumption in the United States of fish, fresh, chilled or frozen, fillets, steaks, and sticks, of cod, cusk, haddock, hake, pollock, and rosefish, for the 3 preceding years, as provided for in headnote 1, part 3A, schedule 1, and item 110.50, TSUS.

It has been determined that the average aggregate consumption for calendar years 1977 through 1979 was 301,606,899 pounds. Therefore, the quota quantity of fish, item 110.50, TSUS, for calendar year 1980 is 45,241,035 pounds.

Dated: March 7, 1980.

WILLIAM T. ARCHEY,
Acting Commissioner of Customs.

(T.D. 80-84)

Foreign Currencies—Daily Rates for Countries Not on Quarterly List

Rates of exchange based on rates certified to the Secretary of the Treasury by the Federal Reserve Bank of New York for the Brazil cruziero, People's Republic of China yuan, Hong Kong dollar, Iran rial, Philippines peso, Singapore dollar, Thailand baht (tical), and Venezuela bolivar

The Federal Reserve Bank of New York, pursuant to section 522(c), Tariff Act of 1930, as amended (31 U.S.C. 372(c)), has certified

buying rates for the dates and foreign currencies shown below. The rates of exchange, based on these buying rates, are published for the information and use of Customs officers and others concerned pursuant to part 159, subpart C, Customs Regulations (19 CFR 159, subpart C).

Brazil cruziero:	
February 25–29, 1980	$0.0221
People's Republic of China yuan:	
February 25, 1980	$0.660720
February 26–29, 1980	.658111
Hong Kong dollar:	
February 25, 1980	$0.200521
February 26, 1980	.200682
February 27, 1980	.202041
February 28, 1980	.202429
February 29, 1980	.202511
Iran rial:	
February 25–29, 1980	Not available
Philippines peso:	
February 25–29, 1980	$0.1350
Singapore dollar:	
February 25, 1980	$0.462107
February 26, 1980	.461894
February 27, 1980	.462107
February 28, 1980	.462000
February 29, 1980	.460511
Thailand baht (tical):	
February 25–29, 1980	$0.0489
Venezuela bolivar:	
February 25–29, 1980	$0.2329

(LIQ-3-TRODE)

Dated: March 12, 1980.

G. S. Shreve
(For Chester R. Krayton,
Director, Duty Assessment Division).

(T.D. 80-85)

Foreign Currencies—Variances From Quarterly Rate

Rates of exchange based upon rates certified to the Secretary of the Treasury by the Federal Reserve Bank of New York

The following rates of exchange are based upon rates certified to the Secretary of the Treasury by the Federal Reserve Bank of New York, pursuant to section 522(c), Tariff Act of 1930, as amended (31 U.S.C. 372(c)), and reflect variances of 5 per centum or more from the quarterly rate published in T.D. 80-28 for the following countries. Therefore, as to entries covering merchandise exported on the dates listed, whenever it is necessary for Customs purposes to convert such currency into currency of the United States, conversion shall be at the following rates:

Japan yen:	
February 29, 1980	$0.003974
Switzerland franc:	
February 25, 1980	$0.598982
February 26, 1980	.598623
February 27, 1980	.600601
February 28, 1980	.598086
February 29, 1980	.587372

(LIQ-3-TRODE)

Dated: March 12, 1980.

G. S. Shreve
(For Chester R. Krayton,
Director, Duty Assessment Division).

U.S. Customs Service

General Notice

(521644)

American Manufacturer's Petition

Notice of decision denying American manufacturer's petition alleging that the appraised value of certain printing presses manufactured in East Germany is too low; notice of petitioner's desire to contest this decision

AGENCY: U.S. Customs Service, Department of the Treasury.

ACTION: Notice of (1) decision on American manufacturer's petition, and (2) receipt of notice of petitioner's desire to contest the decision.

SUMMARY: In response to an American manufacturer's petition alleging that the appraised value of certain web-fed lithographic printing presses from East Germany is too low, the Customs Service advised the petitioner that the appraising officer's determination of value regarding the subject printing presses was considered, following careful review, to be correct. Upon being informed that its petition had been denied, the petitioner filed notice of its desire to contest the decision of the Customs Service.

FOR FURTHER INFORMATION CONTACT: Burton L. Schlissel, Classification and Value Division, U.S. Customs Service, 1301 Constitution Avenue NW., Washington, D.C. 20229; 202-566-2938.

SUPPLEMENTARY INFORMATION:

BACKGROUND

A petition was filed under section 516 of the Tariff Act of 1930, as amended (19 U.S.C. 1516), by an American manufacturer of web-fed lithographic printing presses, Harris Corp., which alleged that the appraised value of the Zephyr 300 printing press, a web-fed lithographic printing press manufactured by the Polygraph Co. of Leipzig, East Germany, is too low. Importations of the Zephyr 300 printing press have been classified under the provision for other printing machinery in item 668.20, Tariff Schedules of the United States, with duty at the column 2 rate of 25 percent ad valorem. Notice of receipt

of the petition was published in the Federal Register on May 4, 1979 (44 F.R. 26233).

The petitioner based its allegation, in part, upon a comparison of the value of an equivalent printing press manufactured in West Germany, the Albert 101, with Department of Commerce data regarding the value of web presses imported from East Germany.

DECISION ON PETITION AND RECEIPT OF PETITIONER'S NOTICE OF DESIRE TO CONTEST

In headquarters letter dated October 16, 1979, file No. 541911, the petitioner was advised that the basis of appraisement used for the Zephyr 300 printing press was cost of production under section 402a(f) of the Tariff Act of 1930, as amended (19 U.S.C. 1402(f)), and that the appraising officer's determination of value was correct. In denying the petition, the petitioner was informed that its reliance upon the selling price of the West German printing press was erroneous inasmuch as it was not produced in the same country as the printing press undergoing appraisement. Furthermore, the Zephyr 300 printing press was imported without a motor, compressor, or various other electrical components which were added following importation, but before sale in the United States.

In response to this decision, the petitioner filed his notice of desire to contest, in accordance with section 516(c) of the Tariff Act of 1930, as amended (19 U.S.C. 1516(c)), and section 175.23 of the Customs Regulations (19 CFR 175.23). However, under section 516(e) of the Tariff Act of 1930, as amended (19 U.S.C. 1516(e)), current Customs practice will continue so long as no decision of the U.S. Customs Court or the U.S. Court of Customs and Patent Appeals not in harmony with this practice is published.

AUTHORITY

This notice is being published in accordance with section 516(c) of the Tariff Act of 1930, as amended (19 U.S.C. 1516(c)), and section 175.24 of the Customs Regulations (19 CFR 175.24).

Dated: March 5, 1980.

ALFRED R. DE ANGELUS
(For Commissioner of Customs).

[Published in the Federal Register, Mar. 12, 1980 (45 F.R. 16070)]

Decisions of the United States Customs Court

United States Customs Court

One Federal Plaza
New York, N.Y. 10007

Chief Judge

Edward D. Re

Judges

Paul P. Rao
Morgan Ford
Scovel Richardson
Frederick Landis
James L. Watson
Herbert N. Maletz
Bernard Newman
Nils A. Boe

Senior Judge

Samuel M. Rosenstein

Clerk

Joseph E. Lombardi

Customs Decision

(C.D. 4845)

SOUTHWEST FLORIDA WINTER VEGETABLE GROWERS ASSOCIATION, ET AL., PLAINTIFFS, *v.* UNITED STATES, DEFENDANT

On Defendant's Motion to Dismiss

Court No. 80-1-00019

[Defendant's motion granted.]

(Dated February 27, 1980)

Van Ness, Feldman & Sutcliffe (*Gerry Levenberg* on the brief) for the plaintiffs.
Alice Daniel, Acting Assistant Attorney General (*David M. Cohen*, Director, Commercial Litigation Branch, on the briefs), for the defendant.

Arnold & Porter (*Alexander E. Bennett, Brooksley E. Landau,* and *Enid L. Veron* on the brief) for intervenor West Mexico Vegetable Distributors Association.

MALETZ, Judge: The question to be decided is whether in an action filed after January 1, 1980, this court has jurisdiction under the Trade Agreements Act of 1979 (hereafter TAA) to review a preliminary determination of sales at not less than fair value that was made by the Secretary of the Treasury prior to January 1, 1980, the effective date of the TAA.

The case arises as follows: On October 19, 1979, plaintiffs, who are three nonprofit organizations composed of farmers in Florida engaged in the production of fresh winter vegetables (tomatoes, peppers, eggplant, squash, and cucumbers), filed an antidumping petition with the Secretary of the Treasury alleging that certain fresh winter vegetables from Mexico were being, or were likely to be, sold at less than fair value within the meaning of the Antidumping Act of 1921, as amended (19 U.S.C. 160 et seq.).

In response to this petition, the Secretary of the Treasury initiated an antidumping investigation and on November 5, 1979, published a tentative determination of sales at not less than fair value in which the Secretary concluded that there were "inadequate grounds to believe or suspect that the purchase price of the fresh winter vegetables from Mexico that are the subject of this investigation is less than the fair value, and thereby the foreign market value, of such or similar merchandise." 44 F.R. 63588, 63589.

On January 3, 1980, plaintiffs filed the present action seeking (1) an order that this preliminary or tentative negative determination by the Secretary was arbitrary, capricious, an abuse of discretion, and otherwise not in accordance with the law; (2) an order determining that there is a reasonable basis to believe or suspect that fresh winter vegetables from Mexico are being or are likely to be sold in the United States at less than fair value; (3) an order requiring the administering authority to immediately withhold appraisement of the subject merchandise; and (4) an order remanding the case to the administering authority with a direction to immediately issue a new preliminary determination consistent with the findings of the court.

Defendant has moved to dismiss the action for lack of jurisdiction and the principal issue before the court is whether section 1002(b)(4) of the TAA permits judicial review of the challenged preliminary negative determination of the Secretary.

Section 1002(b)(4) of title X of the TAA (which title covers judicial review) reads (93 Stat. 307):

(b) TRANSITIONAL RULES.—

* * * * * * *

(4) CERTAIN COUNTERVAILING AND ANTIDUMPING DUTY DETERMINATIONS.—With respect to any preliminary determination or final determination of the Secretary of the Treasury under section 303 of the Tariff Act of 1930 or the Antidumping Act, 1921, which is treated under section 102 of this act as if made under section 703(b), 705(a), 733(b), or 735(a) of the Tariff Act of 1930 (as added by title I of this act) such determinations shall be subject to judicial review in the same manner and to the same extent as if made on the day before the effective date.

Before considering section 1002(b)(4) further, it is important to understand the relationship of that section with section 102 of the TAA which delineates transitional rules to govern the status of countervailing and antidumping investigations pending on the effective date of the TAA. Section 102(b)(2) is the transitional rule applicable to the status of pending antidumping investigations where the preliminary determination was made prior to January 1, 1980. It provides (93 Stat. 189):

(b) PENDING INVESTIGATIONS OF LESS-THAN-FAIR-VALUE SALES.—If, on the effective date of title VII of the Tariff Act of 1930 (i.e., January 1, 1980), there is an investigation in progress under the Antidumping Act, 1921, as to whether imports from a country are being, or are likely to be, sold in the United States or elsewhere at less than fair value, then:

* * * * * * *

(2) If the Secretary has made under the Antidumping Act, 1921, a preliminary determination, but not a final determination, that imports from such country are being or are likely to be sold in the United States or elsewhere at less than fair value, the investigation shall be terminated and the matter previously under investigation shall be subject to the provisions of title VII of the Tariff Act of 1930 as if the preliminary determination under the Antidumping Act, 1921, were a preliminary determination under section 733 of that title made on the effective date of title VII of the Tariff Act of 1930 (i.e., January 1, 1980).[1]

To the extent relevant, the import of section 102(b)(2) is that "(w)ith respect to pending antidumping * * * investigations, the last determination made under the old law will be treated (by sec. 102(b)(2)) as having been made under new law and the time limits and procedures of the new law will subsequently apply." H. Rept. No. 96–317,

[1] Sec. 102(b)(2) specifically applies to preliminary affirmative determinations under the Antidumping Act but does not mention preliminary negative antidumping determinations. However, the legislative history of this section indicates that it covers preliminary negative antidumping determinations as well as preliminary affirmative antidumping determinations. See S. Rept. No. 96-249, 96th Cong., 1st Sess. 102 (1979); H. Rept. No. 96-317, 96th Cong., 1st Sess. 78 (1979). It is also to be noted that the Secretary of Commerce (the successor to the Secretary of the Treasury as the administering authority under the TAA) has likewise taken the position that sec. 102 (b)(2) is applicable to preliminary negative antidumping determinations. But because of the effect of sec. 1002(b)(4), as explained below, it is unnecessary to decide this question and it is therefore assumed *arguendo* that sec. 102 (b) (2) covers such preliminary negative determinations.

96th Cong., 1st Sess., 78 (1979).[2] This means that for the purpose of determining the time within which a final determination must be made by the administering authority and the procedures to be followed, section 102(b)(2) treats a preliminary determination made under the Antidumping Act prior to January 1, 1980, as if it were a preliminary determination made on January 1, 1980, under section 733 of the Tariff Act of 1930 (as added by section 101 of the TAA, 93 Stat. 163). Parenthetically it is to be observed that section 735(a)(1) of the Tariff Act of 1930 (as added by sec. 101 of the TAA, 93 Stat. 169–70) requires that a final determination be made within 75 days after the issuance of a preliminary determination.[3]

On the other hand, the transitional rules of the TAA pertaining to *judicial review* of preliminary determinations made prior to January 1, 1980, are contained in section 1002(b)(4)—and not in section 102. More specifically, section 1002(b)(4) provides, as previously set forth, that judicial review of preliminary antidumping determinations made prior to January 1, 1980, "shall be subject to judicial review *in the same manner* and *to the same extent* as if made on the day before the effective date (January 1, 1980)." [Italic added.]

Against this background, plaintiffs argue that for purpose of judicial review under section 1002(b)(4) of the Secretary's preliminary negative determination which was published on November 5, 1979, the law to be applied is not the law in effect prior to January 1, 1980, but rather is section 516A(a)(1)(E) of the Tariff Act of 1930 (93 Stat. 301). This latter section was added by section 1001(a) of title X of the TAA (93 Stat. 300 et seq.) and permits judicial review of preliminary antidumping determinations made under section 733(b) of the Tariff Act of 1930 (as added by sec. 101 of the TAA, 93 Stat. 163).

According to plaintiffs, the sole effect of section 1002(b)(4) is to establish the day before the effective date of the TAA as the date from which the 30-day period for seeking judicial review pursuant to section 516A(a)(1)(E) of a preliminary determination begins to run. Plaintiffs state that since they filed this action within this timeframe (i.e., on January 3, 1980), this court has jurisdiction.

I cannot agree with plaintiffs' reading of section 1002(b)(4). For the language of that section is clear that the law to be applied for purpose of judicial review is the law in effect on the day before the effective date of the TAA. In other words, judicial review under sec-

---

[2] Similarly, the Senate Finance Committee report on the TAA states (S. Rept. No. 96-249, *supra*, at 102):

> Sec. 102 is a transition rule for cases in progress under the current * * * antidumping laws. The cases would continue but under the new laws. Sec. 102 provides counting rules for application of the new time limits depending on the stage of the investigation under current law. * * *

[3] In accordance with these new statutory requirements, a final determination in the present case must be issued by the administering authority on or before Mar. 17, 1980.

tion 1002(b)(4) is to proceed without regard to the amendments made by title X of the TAA. In this connection, the Senate Finance Committee report explained section 1002(b)(4) of the TAA as follows (S. Rept. No. 96-249, *supra*, at 256):

> * * * (T)he bill would provide in subsection 1002(b)(4) that with respect to judicial review of any preliminary * * * determination of the Secretary of the Treasury under * * * the Antidumping Act which, according to the provisions contained in title VII of the Tariff Act of 1930 as provided in section 102 of the bill, would be treated as if made under specified provisions of title VII, *review would proceed without regard to the amendments made by title X*. [Italic added.]

The short of the matter is that the applicable law for the purpose of judicial review is the law which was in effect prior to the effective date of the TAA without regard to the amendments made by title X of the TAA. And since section 516A(a)(1)(E) is an amendment made by title X of the TAA, it is not applicable here.

Plaintiffs further argue that if Congress intended that section 1002(b)(4) preclude judicial review of preliminary determinations existing on the effective date of the TAA, it would have included such determinations within section 1002(b)(1) of the TAA which section, plaintiffs state, lists those actions for which the amendments made by title X of the TAA (covering judicial review) do not apply. Instead, plaintiffs continue, "Congress enacted a separate subsection to cover such actions, section 1002(b)(4), which by its literal terms permits review under the amended judicial review provisions."

The argument is without merit since section 1002(b)(1) is not preemptive of *all* the cases where title X does not apply. This is demonstrated by the several provisions of section 1002(b) (93 Stat. 307 et seq.) which read as follows:

> (b) TRANSITIONAL RULES.—
>
> (1) CERTAIN PROTESTS, PETITIONS, ACTIONS, ETC.—The amendments made by this title shall not apply with respect to—
>
> (A) any protest, petition, or notice of desire to contest filed before the effective date under section 514, 516(a), or 516(d), respectively, of the Tariff Act of 1930;
>
> (B) any civil action commenced before the effective date under section 2632 of title 28 of the United States Code; or
>
> (C) any civil action commenced after the effective date date under such section 2632 if the protest, petition, or notice of desire to contest (under sec. 514, 516(a), or 516(d), respectively, of the Tariff Act of 1930) on which such action is based was filed before such effective date.

313-582 O - 80 - 2

(2) LAW TO BE APPLIED FOR PURPOSES OF SUCH ACTIONS.—Notwithstanding the repeal of the Antidumping Act, 1921, by section 106(a) of this Act, and the amendment of section 303 of the Tariff Act of 1930 by section 103 of this Act, the law in effect on the date of any finding or determination contested in a civil action described in subparagraph (A), (B), or (C) of paragraph (1) shall be applied for purposes of that action.

(3) CERTAIN COUNTERVAILING AND ANTIDUMPING DUTY ASSESSMENTS.—The amendments made by this title shall apply with respect to the review of the assessment of, or failure to assess, any countervailing duty or antidumping duty on entries subject to a countervailing duty order or antidumping finding if the assessment is made after the effective date. If no assessment of such duty had been made before the effective date that could serve the party seeking review as the basis of a review of the underlying determination, made by the Secretary of the Treasury or the International Trade Commission before the effective date, on which such order, finding, or lack thereof is based, then the underlying determination shall be subject to review in accordance with the law in effect on the day before the effective date.

(4) CERTAIN COUNTERVAILING AND ANTIDUMPING DUTY DETERMINATIONS.—With respect to any preliminary determination or final determination of the Secretary of the Treasury under section 303 of the Tariff Act of 1930 or the Antidumping Act, 1921, which is treated under section 102 of this Act as if made under section 703(b), 705(a), 733(b), or 735(a) of the Tariff Act of 1930 (as added by title I of this act) such determinations shall be subject to judicial review in the same manner and to the same extent as if made on the day before the effective date.

From the foregoing, it is apparent that section 1002(b) in its entirety provides, among other things, that if the underlying administrative determination sought to be judicially reviewed was made prior to the effective date of the TAA, then judicial review is to proceed in accordance with the law in effect prior to the effective date of the TAA without regard to the amendments made by title X. Thus, sections 1002(b)(1) and 1002(b)(2) make clear that the protests, petitions, and actions listed in section 1002(b)(1) are subject to judicial review in accordance with the law in effect prior to the effective date of the TAA. Similarly, section 1002(b)(3) specifies in pertinent part that if no assessment of a countervailing or antidumping duty was made prior to the effective date of the TAA, then a challenge to the underlying administrative finding would be subject to judicial review in accordance with the law in effect prior to the effective date of the TAA. Finally, section 1002(b)(4) prescribes in pertinent part that

preliminary countervailing and antidumping determinations made prior to the effective date of the TAA are judicially reviewable in accordance with the law in effect prior to the effective date of the TAA.

It is thus evident from these statutory provisions that Congress did not intend to exclude only those cases listed in section 1002(b)(1) from the judicial review provisions of title X. On the contrary, it is plain from the provisions of sections 1002(b)(3) and 1002(b)(4) that countervailing and antidumping duty assessment cases and preliminary countervailing and antidumping determinations are also subject to judicial review in accordance with the law in effect prior to the effective date of the TAA where the underlying administrative determination was made prior to the effective date of the TAA.[4]

In summary, the court holds that for purposes of judicial review in the present case, the law in effect on the day before the effective date of the TAA is applicable. That law is section 516 of the Tariff Act of 1930, as amended by the Trade Act of 1974 (19 U.S.C. 1516). But under section 516(d) of that law judicial review in this court pursuant to 28 U.S.C. 1582(b) is not available to challenge a preliminary negative antidumping determination. See, e.g., S. Rept. No. 96–249, 96th Cong., 1st Sess. 250–1 (1979). Hence, the court lacks jurisdiction of the preliminary negative determination here in issue under the law in effect on the day before the effective date of the TAA.

For the foregoing reasons, the action is hereby dismissed without prejudice.

---

[4] Misplaced is plaintiffs' reliance on the statement in the House Ways and Means Committee report on the TAA that sec. 1002(b)(1) "lists those actions for which the amendments made by this title shall *not* apply * * *." H. Rept. No. 96–317, *supra*, at 182. [Italic in original.] This statement is merely an explanation of sec. 1002(b)(1); it does not indicate that the cases listed above in secs. 1002(b)(3) and 1002(b)(4) are subject to judicial review in accordance with title X. In fact, with respect to duty assessments under sec. 1002(b)(3), this same report states that where an underlying determination was made prior to the effective date of the TAA, it is subject to judicial review in accordance with the law in effect prior to the effective date of the TAA. H. Rept. No. 96–317, *supra*, at 183.

Decisions of the United States Customs Court

Abstracts

Abstracted Protest Decisions

DEPARTMENT OF THE TREASURY, *March 3, 1980.*

The following abstracts of decisions of the United States Customs Court at New York are published for the information and guidance of officers of the customs and others concerned. Although the decisions are not of sufficient general interest to print in full, the summary herein given will be of assistance to customs officials in easily locating cases and tracing important facts.

ROBERT E. CHASEN,
Commissioner of Customs.

DECISION NUMBER	JUDGE & DATE OF DECISION	PLAINTIFF	COURT NO.	ASSESSED	HELD	BASIS	PORT OF ENTRY AND MERCHANDISE
				Par. or Item No. and Rate	Par. or Item No. and Rate		
P80/33	Ford, J. February 25, 1980	Dairyland Food Laboratories, Inc.	76-6-01534, etc.	Item 437.49 5%	Item 437.46 Free of duty Protests 3701-5-000311 and 3701-5-000330 untimely; claims dismissed	Novo Enzyme Corporation v. U.S. (C.D. 4806)	Milwaukee Rennet or microbial rennet a microbial milk-clotting enzyme

P80/34	Ford, J. February 25, 1980	Dairyland Food Laboratories, Inc.	79-2-00313	Item 437.49 5%	Item 437.46 Free of duty	Novo Enzyme Corporation v. U.S. (C.D. 4806)	Milwaukee Rennet or microbial rennet a microbial milk-clotting enzyme
P80/35	Ford, J. February 25, 1980	Dairyland Food Laboratories, Inc.	79-8-01297	Item 437.49 5%	Item 437.46 Free of duty	Novo Enzyme Corporation v. U.S. (C.D. 4806)	Milwaukee Rennet or microbial rennet a microbial milk-clotting enzyme
P80/36	Ford, J. February 25, 1980	Mersco Wholesale Co., Inc.	73-9-02560, etc.	Item 653.37 9.5%	Item 653.35 5% Dutiable on basis of export value; said value is represented by exporter's invoice unit prices, less any included non-dutiable charges, net, pkd.	U.S. v. Morris Friedman & Co. (C.A.D. 1156) C.B.S. Imports Corp. v. U.S. (C.D. 4739)	New York Brass candlesticks
P80/37	Ford, J. February 25, 1980	Novo Enzyme Corporation	77-2-00234, etc.	Item 437.49 5%	Item 437.46 Free of duty	Novo Enzyme Corporation v. U.S. (C.D. 4806)	New York Rennet
P80/38	Ford, J. February 25, 1980	Novo Enzyme Corporation et al.	77-9-02962, etc.	Item 437.49 5%	Item 437.46 Free of duty	Novo Enzyme Corporation v. U.S. (C.D. 4806)	New York Rennet

Decisions of the United States Customs Court

Abstracts

Abstracted Reappraisement Decision

DECISION NUMBER	JUDGE & DATE OF DECISION	PLAINTIFF	COURT NO.	BASIS OF VALUATION	HELD VALUE	BASIS	PORT OF ENTRY AND MERCHANDISE
R80/29	Re, C. J. February 25, 1980	Adorence Co. Inc.	77-4-00674, etc.	Export value	Various appraised values shown on entry papers less additions included in said appraised values to reflect currency revaluation	C.B.S. Imports v. U.S. (C.D. 4739)	New York Ladies wearing apparel

Recent Unpublished Customs Service Decisions

The following listing of recent administrative decisions issued by the Office of Regulations and Rulings, U.S. Customs Service, and not otherwise published, is published for the information of Customs officers and the importing community. Although the decisions are not of sufficient general interest to warrant publication as Treasury decisions, the listing describes the issues involved and is intended to aid Customs officers and concerned members of the public in identifying matters of interest which recently have been considered by the Office of Regulations and Rulings.

A copy of any decision included in this listing, identified by its date and file number, may be obtained in a form appropriate for public distribution upon written request to the Office of Regulations and Rulings, Attention: Legal Reference Area, room 2404, U.S. Customs Service, 1301 Constitution Avenue NW., Washington, D.C. 20229. These copies will be made available at a cost to the requester of 10 cents per page. However, the Customs Service will waive this charge if the total number of pages copied is 10 or less.

Decisions listed in earlier issues of the CUSTOMS BULLETIN, through October 24, 1979, are available in microfiche format at a cost of $15.10 (15 cents per sheet of fiche). It is anticipated that additions to the microfiche will be made quarterly and subscriptions are available. Requests for the microfiche now available and for subscriptions should be directed to the Legal Reference Area. Subscribers will automatically receive updates as they are issued and will be billed accordingly.

Dated: March 11, 1980.

JOHN T. ROTH,
Acting Director,
Regulations and Research Division.

Date of decision	File No.	Issue
2- 7-80	104243	Vessel repair: Whether expenses of advertising for competitive bids to repair damage sustained by a canal lock struck by an American-flag vessel are dutiable under the vessel repair statute

Date of decision	File No.	Issue
1-25-80	104385	Carrier control: Whether a certain itinerary violates the coastwise law
1-25-80	104399	Vessel repair: Whether a vessel, primarily designed for and used to push, tow, and position other vessels, is a special purpose vessel under the vessel repair statute
2- 8-80	104408	Vessels: Whether a change in ownership, name, and registry ends or changes the tonnage tax year for a vessel
1-29-80	055203	Classification: Electric train set switches (737.15, 737.95)
2- 1-80	055799	Generalized system of preferences: Whether the hemming and cutting of material to form triangular shaped parts for umbrella tops results in substantially transformed constituent materials
11-10-79	059982	Classification: Benzenoid mixture (403.90)
2-13-80	060714	Classification: Knit shirt worn under baseball uniform (380.57, 380.61)
1-30-80	060875	Classification: Woodshutter; wooden frame (206.67, 207.00)
1-29-80	060887	Classification: Wooden louver doors; cafe doors; prehung doors; bi-fold doors; shutters (206.30, 206.65, 207.00)
2-11-80	060904	Classification: Display boxes used to house writing instruments (256.48, 772.20, 791.65)
2-11-80	060944	Classification: Christmas wreath; stuffed rabbit; stuffed turtle; bunting bag; baby carriage cover (363.05, 363.60, 386.04, 386.09, 737.25, 737.30)
2- 8-80	060979	Classification: Agricultural sticker (432.20)
2- 8-80	061342	American selling price: Woman's slip-on, open-toe, open-back casual shoe with medium wedge and upper of woven fabric (700.60)
2- 8-80	061344	American selling price: Man's casual, closed-toe, closed-back, slip-on shoe with medium wedge and upper of woven fabric (700.60)
2- 8-80	061357	American selling price: Man's closed-toe, closed-back, casual slip-on shoe with rubber sole and mesh (rope) upper (700.60)
1-29-80	061407	Classification: Children's vinyl mittens (705.85, 734.97, 735.05)
1-29-80	061408	Classification: Gloves (705.85, 734.97)
1-29-80	061445	American selling price: Woman's indoor slipper with quilted satin upper and flat bottom of rubber or plastics (700.60)
1-29-80	061471	American selling price: Woman's open-toe, open-back, casual shoe with an upper of canvas and a sole of rubber or plastics (700.60)
2-12-80	061496	American selling price: Nylon split leather vulcanized joggers (700.60)
1-29-80	061515	Classification: Metal scrap; iron base (607.11, 608.15)

Date of decision	File No.	Issue
9-21-79	061527	Valuation: Whether refund of a levy previously imposed upon the quantity of sugar and glucose used to produce confectionery goods may serve to reduce the cost of materials under section 402a(f), Tariff Act of 1930, as amended
2-14-80	061545	Valuation: Whether price list may be used to establish statutory export value
1-29-80	061558	American selling price: Woman's thong sandal (700.60)
2- 1-80	061582	Classification: Snowblower parts (661.10)
2-15-80	061615	Classification: Metal detectors (685.70, 688.40, 712.49)
2- 5-80	061670	American selling price: Woman's indoor slipper (700.60)
2- 5-80	061690	Classification: Disposable shoe covers and overboots used in hospitals (700.85)
1-30-80	061708	Classification: Whether shoe uppers are ornamented
2-15-80	061752	Classification: Chain (652.35, 664.05, 664.10)
2- 8-80	061800	Classification: Printed catalogs (270.50)
2-11-80	061803	Classification: Pelletized beet pulp (184.20, 184.85)
2- 1-80	061814	Classification: Whether patch pockets with true overlap construction are ornamental or jeans
2-12-80	061817	Classification: Vinyl gloves (705.86, 734.99)
2- 1-80	061824	American selling price: Child's protective boot (700.60)
1-29-80	061860	American selling price: Child's protective boot (700.60)
2-15-80	061890	Classification: Plastic water gun (737.65, 737.95)
2-12-80	062205	Classification: Plastic drawstring duffle-type bag (706.60)
2- 1-80	062559	Classification: Water chiller (661.35, 661.68)
2- 8-80	062608	Classification: Cargo lashing straps (389.62, 657.25)
2-11-80	062612	Classification: Sprinkler heads; hose fittings (662.50, 680.19, 772.15, 772.85, 773.25, 774.55)
2- 6-80	062627	Classification: Ice-making machinery (661.12, 661.35)
2- 1-80	062628	Classification: Solid-state menu tally machine (676.15)
2- 8-80	062703	Classification: Agricultural implements (666.00, 870.40)
2- 8-80	062711	Classification: Tractor trailer (692.02)
1-29-80	062812	Classification: Percussion instruments (725.40)
1-31-80	062819	Classification: Windshield sun protector (657.40)
2- 1-80	062844	Classification: Driving shoes (700.35, 700.68)
2- 1-80	062855	Classification: Automobile sunroof kit (692.32, 692.33)
2- 1-80	062866	Classification: Thong sandal (700.60)
2- 1-80	062880	Classification: Christmas stickers (772.97)
2- 1-80	062913	Classification: Gloves (734.97, 735.06, 735.07)
2-15-80	062916	Classification: Inflatable vinyl rafts (737.95)
2-15-80	062925	Classification: Plastic security bags (774.55)
2-12-80	062997	Classification: Rolled steel sections (609.80, 609.84)
2-11-80	064095	Classification: Grain conveyor (660.00)
2-14-80	064103	Classification: Unfinished shoe-style roller skates (734.90)
2- 1-80	064121	Classification: Fabric closure (347.70)
2- 5-80	064128	Classification: Grain vacuum (666.00)
2- 1-80	064133	Classification: Plastic "suede" shoes (700.58)
2- 5-80	064274	Classification: Hockey puck (734.80, 735.20)

International Trade Commission Notices

Investigations by the U.S. International Trade Commission

DEPARTMENT OF THE TREASURY

The appended notices relating to investigations by the U.S. International Trade Commission are published for the information of Customs officers and others concerned.

R. E. CHASEN,
Commissioner of Customs.

In the Matter of CERTAIN ANAEROBIC IMPREGNATING COMPOSITIONS AND COMPONENTS THEREFOR	Investigation No. 337–TA–71

Notice of Termination of Investigation as to Respondent Sundstrand Corp.

Upon consideration of motion docket No. 71–25, as certified to the Commission by the administrative law judge (ALJ) on February 4, 1980, and the ALJ's recommendation that Sundstrand Corp. be terminated as a respondent in the above-captioned investigation, the Commission has ordered termination of its investigation with respect to that firm.

Copies of the Commission order and Commission opinion are available to the public during official working hours at the Office of the Secretary, U.S. International Trade Commission, 701 E Street NW., Washington, D.C.; telephone 202–523–0161.

By order of the Commission.

Issued: March 5, 1980.

KENNETH R. MASON,
Secretary.

Investigation Nos. 701-TA-52 through 701-TA-61 (Final)

Certain Nonquota Cheese From the EC and Norway

Notice of Investigations and Hearing

AGENCY: U.S. International Trade Commission.

ACTION: Institution of 10 countervailing duty investigations to determine whether an industry in the United States is materially injured, or is threatened with material injury, or the establishment of an industry in the United States is materially retarded, by reason of subsidized imports of certain nonquota cheese from member States of the European Communities and Norway.

EFFECTIVE DATE: February 5, 1980.

SUPPLEMENTARY INFORMATION: Section 104(a) of the Trade Agreements Act of 1979 requires the Commission to conduct countervailing duty investigations in cases where the Commission has received the most current net subsidy information pertaining to any countervailing duty order in effect on January 1, 1980, which had been waived pursuant to section 303(d) of the Tariff Act of 1930, and which applies to merchandise other than quota cheese (as defined in sec. 701(c)(1) of the Trade Agreements Act of 1979). On February 5, 1980, and February 28, 1980, the Commission received information with respect to certain nonquota cheese from member States of the European Communities and from Norway. Accordingly, the Commission hereby gives notice that it is instituting the following investigations pursuant to section 705 of the Tariff Act of 1930, as added by title I of the Trade Agreements Act of 1979. These investigations will be subject to the provisions of part 207 of the Commission's Rules of Practice and Procedure (19 CFR, 44 F.R. 76457) and, particularly, subpart C thereof, effective January 1, 1980.

PUBLIC HEARING ORDERED: A public hearing in connection with the investigations will be held on Wednesday, May 21, 1980, in the Commission's hearing room, U.S. International Trade Commission Building, 701 E Street NW., Washington, D.C. 20436, beginning at 10 a.m., e.d.t. Requests to appear at the hearing should be filed in writing with the Secretary to the Commission not later than close of business (5:15 p.m., e.d.t.), Friday, May 15, 1980. For further information, consult the Commission's Rules of Practice and Procedure (19 CFR 207.23).

PREHEARING STATEMENTS: The Commission will prepare and place on the record by April 28, 1980, a staff report containing preliminary findings of fact. The Commission will serve the public portion of the staff report on the parties no later than April 28, 1980. Parties

to the investigation will submit to the Commission a prehearing statement by May 13, 1980. Prehearing statements proferred after the close of business, May 13, 1980, will not be accepted. Each prehearing statement should include the following:

(a) Exceptions, if any, to the preliminary findings of fact contained in the staff report;
(b) Any additional or proposed alternative findings of fact;
(c) Proposed conclusions of law; and
(d) Any other information and arguments which the party believes relevant to the Commission's determination in these investigations.

WRITTEN SUBMISSIONS: Any person may submit to the Commission on or before the date on which prehearing statements are due a written statement of information pertinent to the subject matter of the investigations. A signed original and 19 true copies of such statements must be submitted.

Any business information which a submitter desires the Commission to treat as confidential shall be submitted separately and each sheet must be clearly marked at the top "Confidential business data." Confidential submissions must conform with the requirements of section 201.6 of the Commission's Rules of Practice and Procedure (19 CFR 201.6). All written submissions, except for confidential business data, will be available for public inspection.

Invoice No.	Product/country	Prehearing report to parties	Deadline for prehearing statements from parties	Hearing date	Hearing location	Contact person
701-TA-52	Certain nonquota cheese [1] from Belgium	Apr. 28, 1980	May 13, 1980	May 21, 1980	ITC Bldg., Washington, D.C.	Robert Eninger, 202-523-0312.
701-TA-53	Certain nonquota cheese [1] from Denmark	do	do	do	do	Do.
701-TA-54	Certain nonquota cheese [1] from the Federal Republic of Germany.	do	do	do	do	Do.
701-TA-55	Certain nonquota cheese [1] from France	do	do	do	do	Do.
701-TA-56	Certain nonquota cheese [1] from Ireland	do	do	do	do	Do.
701-TA-57	Certain nonquota cheese [1] from Italy	do	do	do	do	Do.
701-TA-58	Cer'ain nonquota cheese [1] from Luxembourg	do	do	do	do	Do.
701-TA-59	Certain nonquota cheese [1] from the Netherlands	do	do	do	do	Do.
701-TA-60	Certain nonquota cheese [1] from the United Kingdom	do	do	do	do	Do.
701-TA-61	Certain nonquota cheese [2] from Norway	do	do	do	do	Do.

[1] Fiore Sardo and Pecorino cheeses, made from sheep's milk, not grated or powdered, of a fat content, by weight, not exceeding 40 pct, and a water content, by weight, of the nonfatty matter not exceeding 47 pct, provided for in TSUS items 117.65, 117.67, or 117.70; and Feta cheese, made from goat's or sheep's milk, not grated or powdered, of a fat content, by weight, not exceeding 40 pct, a water content, by weight, of the nonfatty matter exceeding 62 pct but not exceeding 72 pct, and with a fat content, by weight, of the dry matter of 39 pct or more, all the foregoing in containers holding brine, provided for in TSUS items 117.70, 117.75, or 117.88.

[2] Gjetost cheeses provided for in TSUS items 117.30, or 117.35; Gammelost cheeses provided for in TSUS item 117.60; and Nokkelost cheeses, with a fat content, by weight, of the dry matter of 30 pct, or of 45 pct, provided for in TSUS item 117.60.

FOR FURTHER INFORMATION CONTACT: Robert Eninger, Investigative Staff, U.S. International Trade Commission, 202-523-0312.

By order of the Commission.

Issued: March 6, 1980.

KENNETH R. MASON,
Secretary.

731-TA-15 (Preliminary)

PIPES AND TUBES OF IRON OR STEEL FROM JAPAN

Notice of Institution of Preliminary Antidumping Investigation and Scheduling of Conference

Investigation instituted.—Following receipt of a petition on February 28, 1980, filed by counsel representing Babcock & Wilcox Co., Beaver Falls, Pa., a domestic producer of steel, the U.S. International Trade Commission on March 5, 1980, instituted a preliminary antidumping investigation under section 733(a) of the Tariff Act of 1930 to determine whether there is a reasonable indication that an industry in the United States is materially injured or is threatened with material injury, or the establishment of an industry in the United States is materially retarded, by reason of imports from Japan of "welded pipes and tubes of iron or steel provided for in item 610.3205 of the Tariff Schedules of the United States Annotated (TSUSA) and seamless pipes and tubes of iron or steel, of circular cross section, provided for in TSUSA items 610.4600, 610.4920, 610.5210, 610.5215, or 610.5270," allegedly sold or likely to be sold at less than fair value. This investigation will be subject to the provisions of part 207 of the Commission's Rules of Practice and Procedure (19 CFR 207, 44 F.R. 76457) and, particularly, subpart B thereof, effective January 1, 1980.

Written submissions.—Any person may submit to the Commission on or before March 27, 1980, a written statement of information pertinent to the subject matter of the investigation. A signed original and 19 copies of such statements must be submitted.

Any business information which a submitter desires the Commission to treat as confidential shall be submitted separately and each sheet must be clearly marked at the top "Confidential business data." Confidential submissions must conform with the requirements of section 201.6 of the Commission's Rules of Practice and Procedure (19 CFR 201.6). All the written submissions, except for confidential business data, will be available for public inspection.

Conference.—The Director of Operations of the Commission has scheduled a conference in connection with the investigation for 10 a.m., e.s.t., on Monday, March 24, 1980, at the U.S. International Trade Commission Building, 701 E Street, Washington, D.C. Parties wishing to participate in the conference should contact the senior investigator for the investigation, Mr. Thomas St. Maxens; 202–523–0339. It is anticipated that parties in support of the petition for antidumping duties and parties opposed to such petition will each be collectively allocated 1 hour within which to make an oral presentation at the conference. Further details concerning the conduct of the conference will be provided by the senior investigator.

Inspection of petition.—The petition filed in this case is available for public inspection at the Office of the Secretary, U.S. International Trade Commission, and at the New York City Office of the U.S. International Trade Commission located at 6 World Trade Center.

Issued: March 5, 1980.

KENNETH R. MASON,
Secretary.

[19 CFR 207.40]

Investigation No. 701–TA–6 (Final)

VISCOSE RAYON STAPLE FIBER
FROM AUSTRIA

Notice of Termination of Investigation

AGENCY: U.S. International Trade Commission.

ACTION: In view of the withdrawal by the petitioner of the petition upon the basis of which investigation No. 701–TA–6 (final) was initiated, the Commission hereby terminates such investigation pursuant to section 704(a) of the Tariff Act of 1930.

EFFECTIVE DATE: February 29, 1980.

FOR FUTHER INFORMATION CONTACT: Ms. Vera Libeau, Office of Investigations; telephone 202–523–0368.

SUPPLEMENTARY INFORMATION: By notice issued January 10, 1980, and published in the Federal Register (45 F.R. 3400 (January 17, 1980)), the Commission instituted the subject investigation to determine, with respect to the articles involved, whether an industry in the United States is materially injured, or is threatened with material injury, or the establishment of an industry in the

United States is materially retarded, by reason of the subsidized imported merchandise. A public hearing was scheduled to be held at the International Trade Commission Building on April 3, 1980.

By order of the Commission.

Issued: February 29, 1980.

KENNETH R. MASON,
Secretary.

[19 CFR 207.40]

Investigation No. 701–TA–41 (Final)

HANDBAGS OF LEATHER FROM BRAZIL

Notice of Termination of Investigation

AGENCY: U.S. International Trade Commission.

ACTION: In view of the withdrawal by the petitioner of the petition upon the basis of which investigation No. 701–TA–41 (final) was initiated, the Commission hereby terminates such investigation pursuant to section 704(a) of the Tariff Act of 1930.

EFFECTIVE DATE: February 26, 1980.

FOR FURTHER INFORMATION CONTACT: Mr. Bruce Cates, Office of Investigations; telephone 202–523–0368.

SUPPLEMENTARY INFORMATION: By notice issued February 14, 1980, and published in the Federal Register (45 F.R. 1938 (February 22, 1980)), the Commission instituted the subject investigation to determine, with respect to the articles involved, whether an industry in the United States is materially injured, or is threatened with material injury, or the establishment of an industry in the United States is materially retarded, by reason of the subsidized imported merchandise. A public hearing was scheduled to be held at the International Trade Commission Building on April 28, 1980.

By order of the Commission.

Issued: February 29, 1980.

KENNETH R. MASON,
Secretary.

Investigation Nos. 701-TA-31-39 (Final), Investigation Nos. 701-TA-42-50 (Final), and Investigation No. 701-TA-51

HAMS AND PORK SHOULDERS, COOKED AND PACKED IN AIRTIGHT CONTAINERS FROM BELGIUM, DENMARK, FEDERAL REPUBLIC OF GERMANY, FRANCE, IRELAND, ITALY, LUXEMBOURG, NETHERLANDS, AND THE UNITED KINGDOM

TOMATOES (WHETHER OR NOT REDUCED IN SIZE), PACKED IN SALT, IN BRINE, PICKLED, OR OTHERWISE PREPARED OR PRESERVED FROM BELGIUM, DENMARK, FEDERAL REPUBLIC OF GERMANY, FRANCE, IRELAND, ITALY, LUXEMBOURG, NETHERLANDS, AND THE UNITED KINGDOM

BUTTER COOKIES FROM DENMARK

Change of Time of Hearing

Notice is hereby given that the hearings in these investigations will be held beginning at 10 a.m., e.d.t., rather than at 10 a.m., e.s.t. as previously announced. The hearings will be held in the Commission's hearing room, U.S. International Trade Commission Building, 701 E Street NW., Washington, D.C. 20436.

Notice of the investigations and hearings was published in the Federal Register of February 22, 1980 (45 F.R. 11938).

By order of the Commission.

Issued: February 29, 1980.

KENNETH R. MASON,
Secretary.

In the Matter of CERTAIN ANAEROBIC IMPREGNATING COMPOSITIONS AND COMPONENTS THEREFOR	Investigation No. 337-TA-71

Notice of Amendment of Notice of Investigation

Upon consideration of motion docket No. 71-27, as certified to the Commission by the administrative law judge (ALJ) on January 31, 1980, the papers filed in support of or in opposition to that motion, and the ALJ's recommendation that the notice of investigation in the above-captioned investigation be amended, the Commission has ordered that Ultraseal International, Ltd., be added as a respondent to the notice of investigation.

Copies of the Commission action and order and the Commission opinion are available to the public during official working hours at the Office of the Secretary, U.S. International Trade Commission, 701 E Street NW., Washington, D.C.; telephone 202-523-0161.

By order of the Commission.

Issued: March 3, 1980.

KENNETH R. MASON,
Secretary.

U.S. Customs Service

Index

	T.D. No.
Treasury decisions:	
Bonds: Consolidated aircraft	80–82
Fish tariff rate quota	80–83
Foreign currencies:	
Daily certified rates; February 25–29, 1980	80–84
Rates which varied from quarterly rate; week of February 25–29, 1980	80–85

Customs Court

Antidumping; sales at not less than fair value, tentative determination of, C.D. 4845

Construction:

- **Antidumping Act of 1921, as amended, C.D. 4845**
  - **Tariff Act of 1930:**
    - **Sec. 516, as amended, C.D. 4845**
    - **Sec. 516(d), as amended, C.D. 4845**
    - **Sec. 516A(a)(1)(E), C.D. 4845**
    - **Sec. 733, C.D. 4845**
    - **Sec. 733(b), C.D. 4845**
    - **Sec. 735(a)(1), C.D. 4845**
  - **Trade Act of 1974, C.D. 4845**
  - **Trade Agreements Act of 1979:**
    - **Sec. 101, C.D. 4845**
    - **Sec. 102(b)(2), C.D. 4845**
    - **Title X:**
      - **Sec. 1001(a), C.D. 4845**
      - **Sec. 1002(b), C.D. 4845**
      - **Sec. 1002(b)(1), C.D. 4845**
      - **Sec. 1002(b)(2), C.D. 4845**
      - **Sec. 1002(b)(3), C.D. 4845**
      - **Sec. 1002(b)(4), C D. 4845**
- U.S. Code:
  - **Title 19:**
    - **Sec. 160 *et seq.*, C.D. 4845**
    - **Sec. 1516, C.D. 4845**
  - **Title 28, sec. 1582 C.D. 4845**

Judicial review of tentative negative LTFV determination; Trade Agreements Act of 1979, C.D. 4845

Jurisdiction, lack of; motion to dismiss action granted, C.D. 4845

Lack of jurisdiction, C.D. 4845

Legislative history:
House Report No. 96–317, 96th Cong., 1st Sess. (1979), pp. 78, 182, 183, C.D. 4845
Senate Report No. 96–249, 96th Cong., 1st Sess. (1979), pp. 102, 250–1, 256, C.D. 4845
Motion to dismiss action granted; jurisdiction, lack of, C.D. 4845
Preliminary determination; Treasury, Secretary of, C.D. 4845
Sales at not less than fair value:
Secretary of Treasury, preliminary determination, C.D. 4845
Tentative determination; antidumping, C.D. 4845
Secretary of Treasury, preliminary determination; sales at not less than fair value, C.D. 4845
Trade Agreements Act of 1979; judicial review of tentative negative LTFV determination, C.D. 4845
Treasury, Secretary of; preliminary determination, C.D. 4845

U. S. GOVERNMENT PRINTING OFFICE : 1980 O - 313-582

Item 950-D 315-595 T1.11/3:14/14
APR 3 1980
Copies 350 contin
Item 950-D

Customs Bulletin

Regulations, Rulings, Decisions, and Notices concerning Customs and related matters

and Decisions

of the United States Court of Customs and Patent Appeals and the United States Customs Court

*1.30

Vol. 14 APRIL 2, 1980 No. 14

9247

This issue contains

T.D. 80–86 through 80–91
General Notice
C.A.D. 1241 and 1242
C.D. 4846
C.R.D. 80–2
Protest abstracts P80/39 and P80/40
Reap. abstracts R80/30 through R80/35
International Trade Commission Notices

THE DEPARTMENT OF THE TREASURY
U.S. Customs Service

Alt.

NOTICE

The abstracts, rulings, and notices which are issued weekly by the U.S. Customs Service are subject to correction for typographical or other printing errors. Users may notify the U.S. Customs Service, Logistics Management Division, Washington, D.C. 20229, of any such errors in order that corrections may be made before the bound volumes are published.

For sale by the Superintendent of Documents, U.S. Government Printing Office, Washington, D.C. 20402. Price: $1.30 (single copy domestic); $1.65 (single copy foreign). Subscription price: $65.00 a year domestic: $81.25 a year foreign.

U.S. Customs Service

Treasury Decisions

(T.D. 80–86)

Bonds

Approval and discontinuance of carrier bonds, Customs form 3587

Bonds of carriers for the transportation of bonded merchandise have been approved or discontinued as shown below. The symbol "D" indicates that the bond previously outstanding has been discontinued on the month, day, and year represented by the figures which follow. "PB" refers to a previous bond, dated as represented by figures in parentheses immediately following, which has been discontinued. If the previous bond was in the name of a different company or if the surety was different, the information is shown in a footnote at the end of the list.

Dated: March 13, 1980.

Name of principal and surety	Date of bond	Date of approval	Filed with district director/area director/amount
ATSL, Inc., Bldg. A, 10 E. Oregon Ave., Philadelphia, PA; motor carrier; St. Paul Fire & Marine Ins. Co.	Nov. 27, 1979	Dec. 14, 1979	Philadelphia, PA; $50,000
Airfreight Enterprises, Inc., 6150 N.E. 92nd Ave., Suite 109, Portland, OR; freight forwarder; Washington International Ins. Co.	Nov. 16, 1979	Dec. 21, 1979	Portland, OR; $50,000
American Pacific Container Line, Inc., 501 Army St., San Francisco, CA; water carrier; Fireman's Fund Insurance Co.	Nov. 15, 1979	Feb. 25, 1980	San Francisco, CA; $50,000
Atlantic Steamers Supply Co., Inc., 1100 Adams St., Hoboken, NJ; motor carrier; Old Republic Ins. Co.	Jan. 23, 1980	Jan. 23, 1980	New York Seaport; $50,000
Atlas Transportation, Inc., 8100 Stansbury Rd., Baltimore, MD; motor carrier; Fidelity & Deposit Co. of MD (PB 12/2/75) D 12/12/78 [1]	June 28, 1979	June 28, 1979	Baltimore, MD: $25,000

Footnotes at end of table.

Name of principal and surety	Date of bond	Date of approval	Filed with district director/area director/amount
The Baltimore and Ohio Railroad Co., (A MD Corp.) and the Staten Island Railroad Corp. (A NY Corp.), Baltimore, MD; rail carrier; The American Casulty Co. of Reading, PA (PB 11/19/41) D 2/8/79 [2]	Feb. 9, 1979	Feb. 9, 1979	Baltimore, Md; $100,000
Baltimore-Washington Express Service, Inc., 3605 Benson Ave., Baltimore, MD; motor carrier; The American Insurance Co.	July 24, 1979	Sept. 5, 1979	Baltimore, MD; $25,000
Bicentennial Trucking, Inc., 317 North Point Blvd., Baltimore, MD; Fidelity and Deposit Co. of MD.	Jan. 21, 1980	Jan. 28, 1980	Baltimore, MD; $25,000
Bio Med Hu Inc., 1901 Outer Loop, Louisville, KY; motor carrier; St. Paul Fire & Marine Ins. Co. (PB 10/26/72) D 1/30/80 [3]	Jan. 24, 1980	Jan. 30, 1980	Cleveland, OH; $35,000
Bluebonnet Express, Inc., 5009 Rusk, Houston, TX; motor carrier; Fidelity and Deposit Co. of MD	Feb. 15, 1980	Feb. 21, 1980	Houston, TX; $25,000
Bower Transportation Services, Inc., 1101 West 11th Ave., Vancouver, WA; motor carrier; Washington International Ins. Co.	Dec. 20, 1979	Dec. 26, 1979	Portland, OR; $25,000
Cargo Inc. (A DE Corp.), 5645 N. Gage St., Rosemont, IL; freight forwarder; Washington International Ins. Co.	Jan. 31, 1980	Feb. 1, 1980	Chicago, IL; $50,000
Chemical Transport, P. O. Box 2644, Great Falls, MT; motor carrier; St. Paul Fire & Marine Insurance Co. D 3/3/80	Feb. 24, 1977	Mar. 1, 1977	Great Falls, MT; $25,000
Chi-Can Freight Forwarding, Ltd., Inland Transport & Terminal, Inc., and Maple Leaf Express, Ltd. (IL Corps.), 3600 S. Western Ave., Chicago, IL; freight forwarder and motor carrier; Commercial Union Ins. Co. (PB 2/8/73) D 11/13/79 [4]	Oct. 18, 1979	Nov. 13, 1979	Chicago, IL; $50,000
Clavin Express, Inc., 54 Water St., East Providence, RI; motor carrier; The Continental Insurance Co.	Oct. 16, 1979	Feb. 25, 1980	Providence, RI; $25,000
Coast Transport, Inc., 1906 S.E. 10th Ave., Portland, OR; motor carrier; The Hanover Ins. Co. (PB 12/6/78) D 1/7/80 [5]	Jan. 4, 1980	Jan. 7, 1980	Portland, OR; $25,000
The Darcy Transportation Co., Inc., 332 Chase River Rd., Waterbury, CT; motor carrier; St. Paul Fire & Marine Ins. Co. D 1/21/80	Oct. 2, 1974	Oct. 15, 1974	Bridgeport, CT; $25,000
W. L. Davis, 15311 Tricia Lane, La Mirada, CA; motor carrier; Insurance Co. of North America (PB 10/15/77) D 12/1/79 [6]	Jan. 10, 1980	Jan. 29, 1980	Nogales, AZ; $50,000
W. L. Davis Trucking, Inc., P. O. Box 973, Pico Rivera, CA; motor carrier; Lumbermens Mutual Casualty Co.	Jan. 11, 1980	Jan. 18, 1980	Nogales, AZ; $25,000

Footnotes at end of table.

Name of principal and surety	Date of bond	Date of approval	Filed with district director/area director/amount
Dravo-Mechling Corp., One Oliver Plaza, Pittsburgh, PA; water carrier; Insurance Co. of North America	Jan. 1, 1980	Feb. 20, 1980	Philadelphia, PA; $150,000
Florida Texas Freight, Inc., 11405 N.W. 36 Ave., Miami, FL; motor carrier; Federal Ins. Co. (PB 7/12/71) D 6/29/79 [7]	June 29, 1979	June 29, 1979	Miami, FL; $25,000
Larry Ford Trucking, Shelby, MT; motor carrier; St. Paul Fire & Marine Ins. Co. D 3/3/80	Feb. 9, 1977	Feb. 11, 1977	Great Falls, MT; $25,000
Garden City Transfer, Inc., 900 William St., San Jose, CA; motor carrier; Peerless Ins. Co. (PB 9/15/77) D 1/10/80 [8]	Nov. 8, 1979	Jan. 10, 1980	San Francisco, CA; $25,000
General Freights, Inc., Operator of Hagerstown Motor Express Co., Inc., Route 11, Pennsylvania Ave., Hagerstown, MD; motor carrier; St. Paul Fire & Marine Ins. Co.	Dec. 13, 1978	Feb. 27, 1979	Baltimore, MD; $25,000
Roy Greenfield Trucking, P.O. Box 747, Weatherford, TX; motor carrier; Ins. Co. of North America	Dec. 31, 1979	Jan. 9, 1980	Laredo, TX; $25,000
Gullett-Gould Ltd., P.O. Box 408, Union City, IN; motor carrier; Protective Ins. Co.	Jan. 7, 1980	Jan. 15, 1980	Nogales, AZ; $25,000
Harbor Towing Corp., 2219 Boston St., Baltimore, MD; water carrier; Fidelity & Deposit Co. of MD D 1/29/80	May 10, 1975	Nov. 7, 1975	Baltimore, MD; $50,000
Hart Motor Express, Inc., 2417 Cleveland Ave. North, St. Paul, MN; motor carrier; Fireman's Fund Ins. Co. D 2/15/80	Mar. 5, 1968	Apr. 11, 1968	Minneapolis, MN; $30,000
Hayes Truck Lines, Inc., 1701 Bay St., Tacoma, WA; motor carrier; The Travelers Indemnity Co. D 12/11/79	June 28, 1977	July 12, 1977	Seattle, WA; $25,000
Duane C. Hedahl, 2225 9th Ave. South, Great Falls, MT; motor carrier; Great American Ins. Co. D 1/28/80	Nov. 13, 1978	Nov. 13, 1978	Great Falls, MT; $25,000
Millard M. Holden, P. O. Box 562, Pharr, TX; motor carrier; Merchants Mutual Bonding Co. (PB 2/7/77) D 2/11/80 [9]	Feb. 7, 1980	Feb. 11, 1980	Laredo, TX; $25,000
IKO Forwarders Ltd., 81 Orenda Rd., Brampton, Ontario, Canada; motor carrier; Aetna Casualty and Surety Co.	Feb. 9, 1979	Jan. 4, 1980	Buffalo, NY; $50,000
Jenny Freight Line, Inc., P. O. Box 50607, Tucson, AZ; motor carrier; The Aetna Casualty and Surety Co. (PB 1/10/78) D 12/28/79 [10]	Nov. 28, 1979	Dec. 28, 1979	Nogales, AZ; $25,000
Jimco Inc., P.O. Box 10041, 1221 Faydeu Ct., Nashville, TN; motor carrier; St. Paul Fire & Marine Ins. Co.	Oct. 12, 1979	Feb. 20, 1980	New Orleans, LA; $25,000

Footnotes at end of table.

Name of principal and surety	Date of bond	Date of approval	Filed with district director/area director/amount
Kreitz Motor Express, Inc., 220 Park Rd., North Wyomissing, PA; motor carrier; Protective Ins. Co. D 12/27/79	Dec. 27, 1974	Jan. 6, 1975	Philadelphia, PA; $25,000
The La Salle & Bureau County Railroad Co., La Salle, IL; rail carrier; U.S. Fidelity & Guaranty Co. D 2/12/80	May 6, 1968	May 6, 1968	Chicago, IL; $50,000
Merchants Storage Co. of Va., 801 S. Pickett St., Alexandria, VA; motor carrier; St. Paul Fire & Marine Ins. Co. D 1/29/80	Oct. 1, 1975	Mar. 22, 1976	Baltimore, MD; $25,000
Metro Hauling, Inc., P.O. Box 88824, Seattle, WA; motor carrier; The Travelers Indemnity Co.	Nov. 28, 1979	Dec. 11, 1979	Seattle, WA; $25,000
Missouri Pacific Air Freight, Inc., 210 N. 13th St., St. Louis, MO; air and motor carrier; St. Paul Fire & Marine Ins. Co.	Nov. 6, 1979	Nov. 7, 1979	St. Louis, MO; $25,000
Ozark Air Lines, Inc., Lambert Field, St. Louis, MO; air carrier; Safeco Ins. Co. of America (PB 7/16/72) D 2/4/80 [1]	Feb. 4, 1980	Feb. 4, 1980	St. Louis, MO; $25,000
Piedmont Aviation, Inc., 3801 Liberty St., N.E., Winston-Salem, NC; air carrier; General Ins. Co. of America	Nov. 2, 1978	Jan. 18, 1979	Baltimore, MD; $25,000
Port East Transfer, Inc., 1404 S. Clinton St., Baltimore, MD; motor carrier; Fidelity & Deposit Co. of MD	Feb. 9, 1979	Feb. 27, 1979	Baltimore, MD; $25,000
R. S. J. Leasing, Inc., 127-36 Northern Blvd., Flushing, NY; motor carrier; Old Republic Ins. Co.	Jan. 3, 1980	Jan. 8, 1980	Newark, NJ; $50,000
Refrigerated Foods, Inc., 1420 33rd St., Denver, CO; motor carrier; St. Paul Fire & Marine Ins. Co.	Nov. 1, 1979	Feb. 6, 1980	El Paso, TX; $25,000
Republic Freight System, Inc., 10990 Roe Ave., Shawnee Mission, KS; motor carrier; The North River Ins. Co. D 2/1/80	Nov. 1, 1976	Nov. 3, 1976	New York Seaport; $50,000
Roadrunner Trucking Inc., 4100 Edith, N.E., Albuquerque, NM; motor carrer; Safeco Ins. Co. of America	Dec. 12, 1979	Feb. 25, 1980	El Paso, TX; $25,000
Robideau's Express, Inc., 2701 S. Front St., Philadelphia, PA; motor carrier; Fidelity & Deposit Co. of MD D 1/22/80	Sept. 14, 1976	Oct. 8, 1976	Philadelphia, PA; $50,000
P. Saldutti & Son, Inc., 497 Raymond Blvd., Newark, NJ; motor carrier; Fidelity & Deposit Co. of MD D 1/10/80	Sept. 6, 1965	Jan. 13, 1966	New York Seaport; $30,000
Shaver Transportation Co., 4900 N.W. Front Ave., Portland, OR; water carrier; United Pacific Ins. Co. D 2/21/80	Feb. 21, 1968	Feb. 28, 1968	Portland, OR; $50,000

Footnotes at end of table.

Name of principal and surety	Date of bond	Date of approval	Filed with district director/area director/amount
Sid's Inc., 9 Western Ave., Jonesport, ME; motor carrier; Ins. Co. of North America	Jan. 3, 1980	Feb. 25, 1980	Portland, ME; $25,000
Skyland, Inc., 256 Celia St., S.W., Grand Rapids, MI; motor carrier; Hartford Accident and Indemnity Co.	Dec. 10, 1979	Jan. 2, 1980	Detroit, MI; $50,000
Smith's Transfer Corp., Staunton, VA; motor carrier; Fidelity & Deposit Co. of MD (PB 8/31/71) D 6/29/77 [12]	June 30, 1977	Aug. 5, 1977	Baltimore, MD; $25,000
Soo Security Motorways Ltd., 60 Eagle Dr., Winnipeg, Manitoba, Canada; motor carrier; The Continental Ins. Co. (PB 3/7/68) D 2/18/80 [13]	Mar. 7, 1979	Jan. 22, 1980	Pembina, ND; $25,000
Southern Farmers Cooperative Association, 181 N.E. 82nd St., Little River, Miami, FL; motor carrier; Sentry Indemnity Co.	Jan. 23, 1980	Jan. 23, 1980	New York Seaport; $25,000
Suwak Trucking Co., 1105-15 Fayette St., Washington, PA; motor carrier; The Travelers Indemnity Co. (PB 4/21/71) D 4/20/75 [14]	Apr. 21, 1975	Apr. 21, 1975	Baltimore, MD; $25,000
Texas Con-Tran, Inc., 9722 Telephone Rd., Houston, TX; motor carrier; Washington International Ins. Co.	Dec. 28, 1979	Jan. 10, 1980	Galveston, TX; $25,000
Transportation Services Inc., 21055 West Road, Detroit, MI; motor carrier; Old Republic Ins. Co.	Jan. 22, 1980	Jan. 31, 1980	Detroit, MI; $50,000
Transystems Inc., P.O. Box 399, Black Eagle, MT; motor carrier; St. Paul Fire & Marine Ins. Co.	Feb. 11, 1980	Feb. 20, 1980	Great Falls, MT; $25,000
Tri-State Trucking Co., Inc., Box 188, Federalsburg, MD; motor carrier; Fidelity and Deposit Co. of MD	Oct. 21, 1976	Oct. 21, 1976	Baltimore, MD; $25,000
Trinity Transport, Inc., P.O. Box 146, Cambridge, MD; motor carrier; Hartford Accident & Indemnity Co.	Sept. 11, 1979	Dec. 27, 1979	Baltimore, MD; $25,000
True Transport, Inc., 15 Stockton St., Newark, NJ; motor carrier; Sentry Ins., a Mutual Co. (PB 2/18/77) D 2/13/80 [15]	Feb. 13, 1980	Feb. 13, 1980	New York Seaport; $50,000
Western Maryland Railway Co., Baltimore, MD; rail carrier; Federal Ins. Co. (PB 7/22/46) D 8/21/75 [16]	July 22, 1975	Sept. 19, 1975	Baltimore, MD; $100,000
Bill White Inc., 5959 W. Century Blvd., Suite 1100 Los Angeles, CA; motor carrier; American Motorists Ins. Co.	Nov. 7, 1979	Jan. 21, 1980	Los Angeles, CA; $25,000
G. Zavitz Limited, 6604 Thorold Stone Rd., Niagara Falls, Ontario, Canada; motor carrier; United States Fidelity & Guaranty Co.	June 1, 1979	Jan. 10, 1980	Buffalo, NY; $25,000

Footnotes at end of table.

Name of principal and surety	Date of bond	Date of approval	Filed with district director/area director/amount
Zirbel Transport, Inc., Lewiston, ID; motor carrier; Midland Ins. Co.	Dec. 10, 1979	Jan. 14, 1980	Great Falls, MT; $25,000

[1] Principal is Atlas Transportation Co.
[2] Principal is The Baltimore & Ohio Railroad Co.; Staten Island Rapid Transit Railway; The Valley Railroad Co.; Camden Warehouses, operating Blue Line Transfer. Surety is Fidelity and Deposit Co. of Maryland.
[3] Surety is Fidelity and Deposit Co.
[4] Principal is Chi-Can Freight Forwarding, Ltd.
[5] Surety is Peerless Ins. Co.
[6] Surety is Northwestern National Inc.
[7] Surety is The Home Indemnity Co.
[8] Principal is G.C.T., Inc. Surety is St. Paul Fire & Marine Ins. Co.
[9] Surety is St. Paul Fire & Marine Ins. Co.
[10] Surety is Peerless Ins. Co.
[11] Surety is The Travelers Indemnity Co.
[12] Surety is Maryland Casualty Co.
[13] Surety is Royal Indemnity Co.
[14] Surety is Ohio Farmers Ins. Co.
[15] Surety is Federal Ins. Co.
[16] Surety is Seaboard Surety Co.

(BON-3-01)

ALFRED G. SCHOLLE,
Director, Carriers, Drawback and Bonds Division.

(T.D. 80-87)

Foreign-Trade Zones—Customs Regulations Amended

Section 146.48(e), Customs Regulations, relating to processing costs incurred and profit realized in foreign-trade zone manufacturing operations, amended

TITLE 19—CUSTOMS DUTIES

CHAPTER I—U.S. CUSTOMS SERVICE

PART 146—FOREIGN-TRADE ZONES

AGENCY: U.S. Customs Service, Department of the Treasury.

ACTION: Final rule.

SUMMARY: The Customs Service includes the cost of processing "nonprivileged" merchandise in a foreign-trade zone, and profit realized, in the dutiable value of that merchandise when it enters the Customs territory of the United States. The present policy results in Customs assessing duty on the costs of American labor, overhead, facilities, and profit. This document changes Customs appraisement practice so as to exclude the cost of processing and profit realized in a foreign-trade zone when determining the dutiable value of articles

produced entirely from nonprivileged merchandise (foreign or domestic), or from a combination of nonprivileged and privileged merchandise (foreign or domestic).

This change results from a Customs review of the existing policy and consideration of the numerous favorable comments received in response to an advance notice and a notice of proposed rulemaking proposing to change the policy. The change is considered to be significant.

EFFECTIVE DATE: (30 days after date of publication in the Federal Register.)

FOR FURTHER INFORMATION CONTACT: Thomas Lobred, Classification and Value Division, U.S. Customs Service, 1301 Constitution Avenue NW., Washington, D.C. 20229; 202-566-2938.

SUPPLEMENTARY INFORMATION:

BACKGROUND

A foreign-trade zone (zone) is established under the Foreign-Trade Zones Act (19 U.S.C. 81a-81u) and the general regulations and rules of procedure of the Foreign-Trade Zones Board contained in 15 CFR part 400. Part 146 of the Customs Regulations (19 CFR part 146) governs the admission of merchandise into a zone; manipulation, manufacture, or exhibition of merchandise in a zone; exportation of merchandise from a zone; and transfer of merchandise from a zone into the Customs territory of the United States (Customs territory).

On October 4, 1978, an advance notice of proposed rulemaking inviting comments on the advisability of changing current Customs appraisement practice to exclude the cost of American labor, overhead, facilities, and profit when determining the dutiable value of articles produced in a zone entirely or in part from nonprivileged merchandise (foreign or domestic) or from a combination of nonprivileged and privileged merchandise (foreign or domestic), was published in the Federal Register (43 F.R. 45885). The vast majority of the comments received favored the change proposed in the advance notice.

A notice of proposed rulemaking requesting the public to comment on a specific proposal to change the current appraisement practice and discussing the possible economic effects of the proposed change was published in the Federal Register on May 21, 1979 (44 F.R. 29489).

DISCUSSION OF COMMENTS

A total of 293 comments were received. Of these, 286 favored the proposal.

In response to Customs discussion of, and request for, comments on the possible economic effects of the proposal, both those who supported and those who opposed the proposal offered principally economic argu-

315-595 O - 80 - 2

ments to bolster their position—essentially, that the proposal would be good or bad for business and the economy. However, legal and other arguments also were made by both sides.

The comments received are discussed below:

Favorable/economic

The proposal would:

Help both the national economy and the U.S. role in international trade by creating greater investment and higher employment in the United States, i.e., U.S. industry would not have to go abroad.

Be anti-inflationary.

Provide an added tax base.

Increase U.S. exports because various products are exported from a zone.

Allow operations presently performed elsewhere to be conducted in the United States; that, in turn, would help the U.S. balance of payments.

Remove the unfair burden of double taxation imposed on labor in a zone, especially because local, State, and Federal taxes are imposed upon the investments made in the zone and income generated from the zone.

Aid local economies through encouragement of investment and creation of new jobs. The use of local zones, as well as the general concept of greater zone use, would be enhanced.

Result in substantial savings of Customs duties for zone users. Under the present system, it may cost more in duty to use a zone than not to use it.

Not affect significantly the competitive position of the U.S. manufacturers of finished products.

Eliminate, or at least minimize, the disadvantage to zones located in high-cost areas in that no duty would be collected on high costs of real estate and labor. Discrimination against zones in high-cost areas would end.

Result in cash flow savings to companies that would deposit duties at the time goods leave the zone, rather than pay duty on finished goods when imported.

Favorable/legal

The proposal is expressive of the congressional intent behind the Foreign-Trade Zones Act: To encourage the development of American industry and labor.

There is no authority under current law to appraise merchandise as Customs presently is doing.

The Secretary of the Treasury has the authority under the Foreign-

Trade Zones Act and section 1624, title 19, United States Code, to fix the basis of duty as set forth in the proposal.

Favorable/miscellaneous

Approval of the proposal is recommended because to do otherwise would be unfair and illogical.

The proposal would encourage the upgrading of port, marine, and terminal facilities, thereby strengthening the American shipping industry and the various ports.

The proposal would eliminate redtape for importers who now must rely on drawback, the use of bonded warehouses, and temporary importation bonds in connection with zone merchandise.

The proposal would aid Customs in that the calculation of duty would be less complex.

The Tariff Schedules of the United States (TSUS) (sec. 1202, title 19, United States Code) are structured in a manner to encourage, in many instances, the importation of finished products rather than parts to be further processed and combined with U.S.-origin parts. This built-in disincentive in the tariff schedules can be overcome only by use of a zone.

Opposed/economic

The proposal would:

Result in injury to U.S. manufacturers of components.

Result in injury to U.S. manufacturers of end-products.

Reduce demand for domestic raw materials with the resultant loss of jobs.

Not spur U.S. exports.

Not result in any significant increase in U.S. investment.

Opposed/legal

The proposal is contrary to congressional intent in that value would be added to the product "outside U.S. commerce," thus in foreign territory, and the added value therefore should be subject to duty.

Opposed/miscellaneous

The proposal would encourage circumvention of existing import restrictions.

All seven commenters who opposed the proposal did so based on one or more of the economic arguments listed above. Two commenters also stated that the proposal would encourage circumvention of existing import quotas.

In some cases, the reduction of the dutiable value of products manufactured in a foreign-trade zone by manufacturers already located in the United States may encourage the use of foreign parts and components. This might be the case if the FTZ manufacturer concluded that

the reduction in dutiable value resulting from the rule change made the use of foreign-made parts and components less costly than domestic parts and components, and other factors typically favoring U.S. suppliers, such as delivery time, reliability of source, and quality control, were not important. A much more likely consequence of the change, however, is that it will tend to encourage foreign manufacturers who now assemble their products entirely outside of the United States to transfer some or all of that assembly to foreign-trade zones in the United States.

Customs finds no merit to the contention that the proposal would encourage the circumvention of existing import quotas. The change in appraisement does not in any way change the existing treatment of quota merchandise processed in a zone. With respect to such merchandise, Customs has held that articles manufactured in zones are products of the zones rather than of the countries from which the component materials were obtained. Whether or not a particular quota limitation applies to products entering the customs territory of the United States from a zone depends on the language of the particular quota provision. In situations where a quota limitation does not apply to merchandise manufactured in a zone, the Foreign-Trade Zones Board has the authority to exclude from zones any goods or manufacturing operation that in its judgment is "detrimental to the public interest" (19 U.S.C. 81o(c)).

In sum, it is Customs opinion that the proposal, on balance, will be beneficial to U.S. industries, employment, and the general U.S. economy by attracting increased assembly and manufacturing operations. Customs is sympathetic to industry concerns regarding zone activity that might affect domestic production adversely. However, as mentioned above, adequate safeguards against domestic injury exist under the regulations of the Foreign-Trade Zone Board.

Two commenters opposed the proposal as contrary to the intent of Congress when the Foreign-Trade Zones Act was enacted. They contend that a zone is "outside U.S. commerce" and that any value added to merchandise through processing occurs in a "foreign territory" and thus is fully dutiable. Moreover, they contend that neither the Foreign-Trade Zones Act nor the Tariff Act of 1930, as amended, authorizes Customs to adjust the valuation base of merchandise entering from a zone by deducting the value of processing which occurs in a zone.

It is Customs position that those statutes do not address how merchandise which leaves a zone is to be appraised. Certainly, as provided in the Foreign-Trade Zones Act, such merchandise is subject "to the laws and regulations of the United States affecting imported

merchandise." However, the laws and regulations regarding appraisement of merchandise ordinarily are concerned with prices and costs in the country of exportation. Thus, for years an anomaly has existed which results in a zone being treated as the "country of exportation" for appraisement purposes. Customs does not believe this was the intent of Congress. As neither the Foreign-Trade Zones Act nor the Tariff Act of 1930, as amended, is explicit on this issue, Customs is not precluded from adopting the proposal for the reasons advanced by these commenters.

In light of the overwhelming public support for the proposal and Customs conclusion that there is no legal impediment to its adoption, section 146.48(e), Customs Regulations, is being amended as set forth in the May 21, 1979, notice of proposed rulemaking, subject to the clarification described below.

CLARIFICATION OF PROPOSED AMENDMENT

One of the commenters in favor of the proposal expressed his understanding that the words "labor cost" were not excluded intentionally from proposed section 146.48(e), but were omitted because the words "processing costs" were thought to be more inclusive and to parallel the language in section 402(d), Tariff Act of 1930, as amended (19 U.S.C. 1401a(d)), pertaining to constructed value. The commenter's understanding is correct. Labor costs are an element of processing costs.

Because of another comment, the proposal has been clarified to specify that the cost of fabrication or other processing includes general expenses and all other expenses incident to placing the merchandise in condition, packed ready for transfer into the Customs territory. This clarification is designed to prevent any confusion regarding the limitation of processing to exclude those general and other expenses described above from the scope of the amendment.

The same commenter noted that it would be appropriate to apply the amendment to all affected entries on which appraisement (liquidation) had not become final on the effective date of the amendment. Customs agrees, finding that suggestion to be consistent with the intent of the proposal and sound Customs administration.

MERCHANDISE SUBJECT TO AMENDMENT

This amendment will apply to merchandise as to which liquidation has not become final on the effective date of the amendment.

INAPPLICABILITY OF EXECUTIVE ORDER 12044

This document is not subject to the Treasury Department directive implementing Executive Order 12044, "Improving Government

Regulations," because the regulation was in process before May 22, 1978, the effective date of the directive.

DRAFTING INFORMATION

The principal author of this document was Todd J. Schneider, Regulations and Research Division, Office of Regulations and Rulings, U.S. Customs Service. However, personnel from other Customs offices participated in its development.

AMENDMENT TO THE REGULATIONS

Section 146.48(e), Customs Regulations (19 CFR 146.48(e)), is amended as set forth below:

PART 146—FOREIGN-TRADE ZONES

Section 146.48(e) is amended to read as follows:

146.48 *Treatment of merchandise not elsewhere provided for in this subpart.*

* * * * * * *

(e) *Appraisement and tariff classification.* (1) Merchandise subject to the provisions of this section, upon transfer from a zone and entry for consumption or for warehousing, either immediately or after transportation in bond, shall be subject to appraisement and tariff classification in accordance with its character and condition at the time of its constructive transfer to the customs territory and, except for any different rates applicable to any privileged foreign merchandise therein, to the rate or rates of duty and tax in force at the time entry for consumption or withdrawal from warehouse for consumption is made (see sections 141.68 and 141.69 of this chapter).

(2) The value of the merchandise described in paragraph (e)(1) shall be determined in accordance with sections 402, 402a, and 500, Tariff Act of 1930, as amended (19 U.S.C. 1401a, 1402, 1500), and the related provisions of law. However, the cost of fabrication or other processing, and the general expenses and profit, related to zone operations shall be excluded when determining the dutiable value of an article produced entirely from nonprivileged merchandise (foreign or domestic), or from a combination of privileged and nonprivileged merchandise (foreign or domestic). All other expenses incurred in the zone incidental to placing the article in condition, packed ready for transfer, and freight, insurance, and similar costs incurred after the article is

packed ready for transfer into the customs territory also shall be excluded in determining dutiable value.

WILLIAM T. ARCHEY,
Acting Commission of Customs.

Approved: February 4, 1980.
RICHARD J. DAVIS,
Assistant Secretary of the Treasury.

[Published in the Federal Register, Mar. 21, 1980 (45 F.R. 17976)]

(T.D. 80-88)

Country-of-Origin Marking—Customs Regulations Amended

Section 134.3, Customs Regulations, relating to withholding delivery and redelivery of merchandise for country-of-origin marking, amended

TITLE 19—CUSTOMS DUTIES

CHAPTER I—U.S. CUSTOMS SERVICE

PART 134—COUNTRY-OF-ORIGIN MARKING

AGENCY: U.S. Customs Service, Department of the Treasury.

ACTION: Final rule.

SUMMARY: Customs has become aware of a possible conflict between two sections of the Customs Regulations relating to the redelivery to Customs custody of a previously released imported article so that it may be marked with the country of origin. This document amends section 134.3 to clarify that a demand for redelivery to Customs custody of an imported article for country-of-origin marking must be made not later than 30 days after entry or examination of the article, as required in section 141.113. The amendment is not considered to be significant.

FOR FURTHER INFORMATION CONTACT: Samuel A. Orandle, Entry Procedures and Penalties Division, U.S. Customs Service, 1301 Constitution Avenue NW., Washington, D.C. 20229; 202-566-8237.

SUPPLEMENTARY INFORMATION:

BACKGROUND

Section 304 of the Tariff Act of 1930, as amended (19 U.S.C. 1304), provides that every imported article (or its container) shall be marked

to indicate to an ultimate purchaser in the United States the English name of the country of origin of the article. Part 134, Customs Regulations (19 CFR part 134), contains the country-of-origin marking regulations.

Section 134.3, Customs Regulations (19 CFR 134.3), provides that articles previously released may be ordered redelivered to Customs custody, and articles held in Customs custody shall not be delivered—

(1) until every imported article (or its container) previously released from Customs custody or held in Customs custody for inspection, examination, or appraisement, is marked properly; or

(2) until estimated duties payable under 19 U.S.C. 1304 (c) for failure to mark the article properly, or adequate security for those duties, are deposited.

Section 141.113, Customs Regulations (19 CFR 141.113), provides that a demand for the redelivery to Customs custody for the purpose of requiring articles to be marked legally shall be made no later than 30 days after—

(1) the date of entry, in the case of articles examined in public stores and places of arrival, such as docks, wharfs, or piers; or

(2) the date of examination, in the case of articles examined at the importer's premises or other appropriate places as determined by the district director of Customs.

Customs has become aware that these two sections of the Customs Regulations may be interpreted to be in conflict. Section 134.3 provides that redelivery to Customs custody of a previously released article may be ordered at any time until the article has been marked with the country of origin, or until estimated duties for failure to mark the article or adequate security for those duties are deposited. Section 141.113, however, provides that demand for the return to Customs custody of previously released articles for legal marking shall be made within 30 days after entry or examination.

After review of the matter, Customs has determined that the existing practice of requiring that a demand for redelivery of articles for country-of-origin marking be made within 30 days after entry of examination should continue. Therefore, to clarify the matter, section 134.3 is being amended to provide that demand for redelivery of articles for country-of-origin marking must be made within the 30-day time period required in section 141.113. Failure to demand redelivery of articles for country-of-origin marking within 30 days after entry of examination does not affect the collection of the 10-percent additional duty as provided for in section 134.2, Customs Regulations.

INAPPLICABILITY OF PUBLIC NOTICE AND DELAYED EFFECTIVE DATE REQUIREMENTS

Because this amendment merely clarifies existing regulations and imposes no additional duty or burden on the public, pursuant to 5 U.S.C. 553(b)(B), notice and public procedure are unnecessary, and pursuant to 5 U.S.C. 553(d)(2), a delayed effective date is not required.

INAPPLICABILITY OF EXECUTIVE ORDER 12044

This document is not subject to the Treasury Department directive implementing Executive Order 12044, "Improving Government Regulations," because the amendment was in process before May 22, 1978, the effective date of the directive.

DRAFTING INFORMATION

The principal authors of this document were Shannon McCarthy and Paul G. Hegland, Regulations and Research Division, Office of Regulations and Rulings, U.S. Customs Service. However, personnel from other Customs offices participated in its development.

AMENDMENT TO THE REGULATIONS

PART 134—COUNTRY-OF-ORIGIN MARKING

The heading and text of section 134.3, Customs Regulations (19 CFR 134.3), are amended to read as follows:

134.3 *Delivery withheld until marked and redelivery ordered.*

(a) Any imported article (or its container) held in Customs custody for inspection, examination, or appraisement shall not be delivered until marked with its country of origin, or until estimated duties payable under 19 U.S.C. 1304(c), or adequate security for those duties (see section 134.53(a) (2)), are deposited.

(b) The district director may demand redelivery to Customs custody of any article (or its container) previously released which is found to be not marked legally with its country of origin for the purpose of requiring the article (or its container) to be properly marked. A demand for redelivery shall be made, as required under section 141.113(a) of this chapter, not later than 30 days after—

(1) The date of entry, in the case of merchandise examined in public stores and places of arrival, such as docks, wharfs, or piers; or

(2) The date of examination, in the case of merchandise examined at the importer's premises or such other appropriate places as determined by the district director.

(c) Nothing in this part shall be construed as excepting any article (or its container) from the particular requirements of marking provided for in any other provision of law.

315-595 O - 80 - 3

(R.S. 251, as amended, secs. 304, 624, 46 Stat. 687, as amended, 759 (19 U.S.C. 66, 1304, 1624).)

R. E. CHASEN,
Commissioner of Customs.

Approved: March 10, 1980.
RICHARD J. DAVIS,
Assistant Secretary of the Treasury.

[Published in the Federal Register, Mar. 24, 1980 (45 F.R. 18920)]

(T.D. 80–89)

(521600)

Change of practice concerning the tariff classification of the Rock Super X–11, Rock Super X–15, Traction Super X–11, and Traction Super X–15 tire protection chains

AGENCY: U.S. Customs Service, Department of the Treasury.

ACTION: Final rule.

SUMMARY: This document announces that the Customs Service is changing the current uniform and established practice of classifying the Rock Super X–11, Rock Super X–15, Traction Super X–11, and Traction Super X–15 tire protection chains manufactured by Erlau of West Germany as chains with links of stock which is essentially round in cross section under items 652.24 through 652.33, Tariff Schedules of the United States (TSUS). Pursuant to this change of practice, the Customs Service will classify the enumerated tire protection chains as other chains under item 652.35, TSUS, inasmuch as the subject tire protection chains consist predominantly of links of stock which is not essentially round in cross section.

DATES: This change of practice will be effective with respect to merchandise entered or withdrawn from warehouse for consumption on or after 90 days from the date of publication of this notice in the CUSTOMS BULLETIN.

FOR FURTHER INFORMATION CONTACT: Leonard J. Emmert, Classification and Value Division, U.S. Customs Service, 1301 Constitution Avenue NW., Washington, D.C. 20229; 202–566–8181.

SUPPLEMENTARY INFORMATION:

BACKGROUND

In T.D. 78–367, the Customs Service noted that a uniform and established practice existed of classifying the Rock Super X–11, Rock Super X–15, Traction Super X–11, and Traction Super X–15 tire protection chains manufactured by Erlau of West Germany under the provisions for chain and chains, and parts thereof, all the foregoing

of base metal not coated or plated with precious metal, of iron or steel, with links of stock which is essentially round in cross section, in items 652.24 through 652.33, Tariff Schedules of the United States (TSUS), depending upon the diameter of the link stock. This finding of practice was limited to the tire protection chains enumerated above.

On October 4, 1979, notice of a proposed change of practice concerning the enumerated tire protection chains was published in the Federal Register (44 F.R. 57248). The notice advised that the Customs Service was reviewing the current uniform and established practice of classifying the Rock Super X–11, Rock Super X-15, Traction Super X–11, and Traction Super X–15 tire protection chains as chains with links of stock which is essentially round in cross section under items 652.24 through 652.33, TSUS. Although comments with respect to the proposal were invited, no comments were received.

Each of the enumerated Erlau tire protection chains consists of a chain mesh having two distinct link types. One is a welded ring or link of stock essentially round in cross section with a uniformly measurable diameter. The other link is a forged steel wear link which is the essential tire protection element. The forged wear links are of stock which is not essentially round in cross section. Inasmuch as the forged wear links predominate in both area and weight over the links of stock which is essentially round in cross section, it is the position of the Customs Service that the subject tire protection chains are precluded from classification as chains with links of stock which is essentially round in cross section under items 652.24 through 652.33, TSUS. This position is consistent with T.D. 78–367 which stated that tire protection chains with links of stock which is not essentially round in cross section are properly classifiable under item 652.35, TSUS.

CHANGE OF PRACTICE

The Customs Service is changing its practice of classifying the Rock Super X–11, Rock Super X–15, Traction Super X–11, and Traction Super X–15 tire protection chains manufactured by Erlau of West Germany as chains with links of stock which is essentially round in cross section under items 652.24 through 652.33, TSUS. The Customs Service will henceforth classify the enumerated tire protection chains under the provision for chain or chains, other, in item 652.35, TSUS. This change of practice shall be effective as to merchandise entered or withdrawn from warehouse for consumption on or after 90 days from the date of publication of this notice in the CUSTOMS BULLETIN.

DRAFTING INFORMATION

The principal author of this notice was Harold I. Loring, Regulations and Research Division, U.S. Customs Service. However, per-

sonnel from other offices of the U.S. Customs Service participated in developing this notice, both on matters of style and substance.

WILLIAM T. ARCHEY,
Acting Commissioner of Customs.

Approved: March 10, 1980.
RICHARD J. DAVIS,
Assistant Secretary of the Treasury.

[Published in the Federal Register, Mar. 25, 1980 (45 F.R. 19420)]

(T.D. 80-90)

Foreign Currencies—Daily Rates for Countries Not on Quarterly List

Rates of exchange based on rates certified to the Secretary of the Treasury by the Federal Reserve Bank of New York for the Brazil cruziero, People's Republic of China yuan, Hong Kong dollar, Iran rial, Philippines peso, Singapore dollar, Thailand baht (tical), and Venezuela bolivar

The Federal Reserve Bank of New York, pursuant to section 522(c), Tariff Act of 1930, as amended (31 U.S.C. 372(c)), has certified buying rates for the dates and foreign currencies shown below. The rates of exchange, based on these buying rates, are published for the information and use of Customs officers and others concerned pursuant to part 159, subpart C, Customs Regulations (19 CFR 159, subpart C).

Brazil cruzeiro:	
March 3–6, 1980	$0.0221
March 7, 1980	.0214
People's Republic of China yuan:	
March 3–6, 1980	$0.655480
March 7, 1980	.652869
Hong Kong dollar:	
March 3, 1980	$0.201816
March 4, 1980	.201857
March 5, 1980	.201450
March 6, 1980	.200521
March 7, 1980	.202143
Iran rial:	
March 3–7, 1980	Not available
Philippines peso:	
March 3–7, 1980	$0.1350

Singapore dollar:	
March 3, 1980	$0.459982
March 4–5, 1980	.459770
March 6–7, 1980	.458716
Thailand baht (tical):	
March 3–7, 1980	$0.0489
Venezuela bolivar:	
March 3–7, 1980	$0.2329

(LIQ-3-TRODE)

Dated: March 19, 1980.

HERBERT H. GELLER
(For Chester R. Krayton,
Director, Duty Assessment Division).

(T.D. 80-91)

Foreign Currencies—Variances From Quarterly Rate

Rates of exchange based upon rates certified to the Secretary of the Treasury by the Federal Reserve Bank of New York

The following rates of exchange are based upon rates certified to the Secretary of the Treasury by the Federal Reserve Bank of New York, pursuant to section 522(c), Tariff Act of 1930, as amended (31 U.S.C. 372(c)), and reflect variances of 5 per centum or more from the quarterly rate published in T.D. 80-28 for the following countries. Therefore, as to entries covering merchandise exported on the dates listed, whenever it is necessary for Customs purposes to convert such currency into currency of the United States, conversion shall be at the following rates:

Switzerland franc:	
March 3, 1980	$0.583090
March 4, 1980	.581058
March 5, 1980	.584624
March 6–7, 1980	.583090

(LIQ-3-TRODE)

Dated: March 19, 1980.

HERBERT H. GELLER
(For Chester R. Krayton,
Director, Duty Assessment Division).

U.S. Customs Service

General Notices

(521487)

American Manufacturer's Petition

Notice of decision denying American manufacturer's petition requesting the reclassification of sheets of acrylic resin; notice of petitioner's desire to contest this decision

AGENCY: U.S. Customs Service, Department of the Treasury.

ACTION: Notice of (1) decision on American manufacturer's petition, and (2) receipt of notice of petitioner's desire to contest the decision.

SUMMARY: In response to an American manufacturer's petition requesting that acrylic resin sheets, regardless of dimension, be reclassified under the provision for nonflexible sheets of acrylic resin in item 771.45, Tariff Schedules of the United States (TSUS), the Customs Service advised the petitioner that acrylic resin sheets, measuring over 15 inches in width and 18 inches in length, would continue to be classified under the provision for flexible plastic sheets in item 771.42, TSUS, provided the sheets could be easily bent, turned, or twisted by hand without being broken, cracked, or permanently distorted upon returning by themselves to their original shape. Upon being informed that its petition had been denied, the petitioner filed notice of its desire to contest the decision of the Customs Service.

FOR FURTHER INFORMATION CONTACT: Donald F. Cahill, Classification and Value Division, U.S. Customs Service, 1301 Constitution Avenue NW., Washington, D.C. 20229; 202-566-8181.

SUPPLEMENTARY INFORMATION:

BACKGROUND

A petition was filed under section 516 of the Tariff Act of 1930, as amended (19 U.S.C. 1516), by Rohm & Haas Co., Philadelphia, Pa., an American manufacturer of acrylic resin sheets. The petition requested that acrylic resin sheets, regardless of dimension, be reclassi-

fied under the provision for nonflexible sheets of acrylic resin in item 771.45, Tariff Schedules of the United States (TSUS). Notice of receipt of the petition, which was published in the Federal Register on January 12, 1979 (44 F.R. 2745), indicated that it is current Customs practice to classify acrylic resin sheets measuring over 15 inches in width and 18 inches in length under the provision for flexible plastic sheets in item 771.42, TSUS, provided the sheets can be easily bent, turned, or twisted by hand without being broken, cracked, or permanently distorted upon returning by themselves to their original shape. This practice is derived, in part, from the decision in *Sekisui Products, Inc.* v. *United States*, 63 Cust. Ct. 123, C.D. 3885 (1969), in which the U.S. Customs Court noted that an article, in order to be flexible, need not be capable of being bent, bowed, or twisted in every direction.

It is the petitioner's basic contention that acrylic resin sheets are specifically provided for by name in item 771.45, TSUS, and are commercially characterized as rigid plastic sheets. In this regard, the petitioner argues that the dictionary definition of a flexible sheet as one that can be easily bent must yield to industry standards of defining flexibility. It is the position of the Customs Service, however, that acrylic resin sheets of the kind in question conform to the definition of flexibility expressed by the Customs Court in the *Sekisui* case *supra*. To substitute industry standards for flexibility as suggested by the petitioner would be contrary to judicial precedent. Furthermore, the legislative history of item 771.42, TSUS, indicates that imports of flexible acrylic resin sheets are classifiable thereunder.

DECISION OF PETITION AND RECEIPT OF PETITIONER'S NOTICE OF DESIRE TO CONTEST

In headquarters' letter dated August 6, 1979, file No. 057473, the petitioner was advised that his petition was denied and that the Customs Service would adhere to its practice of classifying acrylic resin sheets measuring over 15 inches in width and 18 inches in length under the provision for flexibile plastic sheets in item 771.42, TSUS, provided the sheets can be easily bent, turned, or twisted by hand without being broken, cracked, or permanently distorted upon returning by themselves to their original shape.

In response to this decision, the petitioner filed his notice of desire to contest, in accordance with section 516(c) of the Tariff Act of 1930, as amended (19 U.S.C. 1516(c)), and section 175.23 of the Customs Regulations (19 CFR 175.23). However, under section 516(e) of the Tariff Act of 1930, as amended (19 U.S.C. 1516(e)), current Customs practice will continue so long as no decision of the U.S. Customs Court or the U.S. Court of Customs and Patent Appeals not in harmony with this practice is published.

AUTHORITY

This notice is being published in accordance with section 516(c) of the Tariff Act of 1930, as amended (19 U.S.C. 1516(c)), and section 175.24 of the Customs Regulations (19 CFR 175.24).

Dated: March 13, 1980.

JACK T. LACY
(For Commissioner of Customs).

Reliquidation of Customs Entries Due to Recertification of Certain Exchange Rates Previously Certified by the Federal Reserve Bank of New York

The Secretary of the Treasury has been informed by the Federal Reserve Bank of New York that it plans to recertify certain exchange rates previously certified by the bank under 31 United States Code, section 372. Specifically, the recertifications involve several infrequently traded currencies covering certifications issued in the first half of 1979 for dates of export between the beginning of 1976 and the middle of 1979, and for certain other currencies of nations which employ multiple exchange rates.

Certified exchange rates are used by the U.S. Customs Service in the appraisement of merchandise for duty assessment purposes. Conversion is necessary when the appraisement is made in the foreign currency, principally in the relatively unusual situation where the transaction is denominated in the foreign currency, and more importantly, in the past, when the merchandise was on the final list, T.D. 54521.

The Customs Service believes that some appraisements made in the past on the basis of the exchange rates to be recertified may have been adverse to importers. Moreover, the Customs Service has concluded that some such appraisements were the result of a mistake of fact or other inadvertence not amounting to an error in the construction of a law, and accordingly will entertain requests for reliquidation under section 520(c) of the Tariff Act of 1930 (19 United States Code, sec. 1520(c)).

Such requests would be limited to merchandise exported from and appraised in the currency of one of the countries identified below where the matter is brought to Customs attention within 1 year of liquidation. Reliquidation will be based only upon such exchange rates as are recertified by the Federal Reserve Bank of New York for the appropriate date of exportation.

The countries are:

Afghanistan
China, Republic of (Taiwan)
Costa Rica
Czechoslovakia
Ghana
Hungary
Indonesia
Israel
Jamaica
Kenya
Korea [1]
Mauritius
Morocco
Nepal
Poland
Rumania
Sierra Leone
Tunisia
Turkey

[1] The Korean won has already been recertified for the period Jan. 1, 1976 to Jan. 14, 1980, at the exchange rate $0.002070.

(LIQ-3-TRODE)

Dated: March 14, 1980.

WILLIAM T. ARCHEY,
Acting Commissioner of Customs.

315-595 O - 80 - 4

Decisions of the United States Court of Customs and Patent Appeals

(C.A.D. 1241)

HAWAIIAN MOTOR CO. *v.* UNITED STATES, No. 79–27

1. Customs Court judgment sustaining classification of imported merchandise as hand-directed or controlled tools having a self-contained, nonelectric motor under TSUS item 674.70, affirmed.
2. An internal combustion engine is a nonelectric motor for the purposes of TSUS item 674.70.
3. One purpose of the TSUS, in Schedule 6, was to reduce the number and importance of basket provisions in its predecessor, the Tariff Act of 1930.
4. *Summaries of Trade and Tariff Information*, while not evidence of congressional intent regarding the TSUS, is useful as evidence of administrative practice of the Customs Service.

U.S. Court of Customs and Patent Appeals, March 13, 1980

Appeal from U.S. Customs Court, C.D. 4790

[Affirmed.]

Stein, Shostak, Shostak and O'Hara, Inc. attorneys of record for appellant, *John N. Politis* of counsel.

Alice Daniel, Assistant Attorney General, *David M. Cohen*, Director, *Joseph I. Liebman*, Attorney in Charge, Field Office for Customs Litigation, *John J. Mahon*, Commercial Litigation Branch, attorneys of record for appellee.

[Oral argument on February 11, 1980 by John N. Politis, for appellant and by John J. Mahon for appellee.]

Before, MARKEY, *Chief Judge*, RICH, BALDWIN, and MILLER, *Associate Judges*, and FORD,[1] *Judge*.

RICH, Judge.

[1] This appeal is from the judgment of the U.S. Customs Court in *Hawaiian Motor Company* v. *United States*, 82 Cust. Ct. 70, C.D. 4790, 473 F. Supp. 787 (1979), sustaining the classification of imported

[1] The Honorable Morgan Ford, U.S. Customs Court, sitting by designation.

merchandise by the U.S. Customs Service as hand-directed or controlled tools with pneumatic or self-contained, nonelectric motor, and parts thereof. We affirm.

THE MERCHANDISE

The imported merchandise consists of a 22.5-cubic-centimeter displacement gasoline engine, stand, tool kit, and two blades packed in one carton, and a drive shaft packed separately in another carton. It is described on commercial invoices as " 'Xenoah' BCD Brush Cutters" and was exported from Japan in 1975. In the United States, it is known as the "Green Machine 3000" (hereinafter Green Machine). From testimony adduced in the Customs Court, it appears that the two blades which come with the unit are accessories, and that the principal use of the Green Machine is with a nylon cord trimmer which is not imported but is added to the merchandise in the United States.

When the Green Machine is used with the nylon cord trimmer, its function is to cut weeds, grass, and similar vegetation. If the blades are attached, the Green Machine can be used to cut brush, as well as to trim branches from trees. The engine is equipped with an all-position diaphragm carburetor which enables the cutter to be turned upward to that it will reach overhead in connection with work on trees or hillsides.

RELEVANT STATUTES

Both the classification claimed by appellant, and that assigned to the merchandise upon liquidation, appear in schedule 6, part 4 of the Tariff Schedules of the United States (TSUS).

Claimed under:

Subpart C.—Agricultural and Horticultural Machinery; Machinery for Preparing Food and Drink

> *Subpart C headnote:*
>
> 1. The provisions of item 666.00 for "agricultural and horticultural implements not specially provided for" do not apply to any of the articles provided for in schedule 6, part 2, part 3 (subparts A through F, inclusive), part 5 (except item 688.40), or part 6, *or to any of the articles specially provided for elsewhere in the tariff schedules*, but interchangeable agricultural and horticultural implements are classifiable in item 666.00 even if mounted at the time of importation on a tractor provided for in part 6B of this schedule. [Italic ours.]

* * * * * * *

666.00	Machinery for soil preparation and cultivation, agricultural drills and planters, fertilizer spreaders, harvesting and threshing machinery, hay or grass mowers (except lawn mowers), farm wagons and carts, milking machines, on-farm equipment for the handling or drying of agricultural or horticultural products, and agricultural and horticultural implements not specially provided for and parts of any of the foregoing	Free

Classified under:

Subpart F.—Machines for Working Metal, Stone, and Other Materials

* * * * * * *

	Hand-directed or controlled tools with pneumatic or self-contained, nonelectric motor, and parts thereof:	
	* * * * * * *	
674.70	Other	4.5% ad val.

CUSTOMS COURT

The Customs Court sustained the classification which was assigned upon liquidation. The court held that the testimony and evidence supported the inclusion of the Green Machine under item 674.70. It was "firmly of the opinion that the Xenoah BCD Brush Cutter is described by and falls squarely within the provision for hand-directed or controlled tools with self-contained, nonelectric motor in item 674.70 and is, therefore, specially provided for in the TSUS." 82 Cust. Ct. at——, 473 F. Supp. at 791.

In particular, the court was not convinced by appellant's argument that the term "nonelectric motor," as used in item 674.70, does not include internal combustion engines. The argument was that Congress had used the term elsewhere in the TSUS in a manner which did not include internal combustion engines and that there was no evidence that a different meaning was intended in item 674.70.

The court also held that appellant had failed to carry its burden of proving that item 666.00 is the proper classification for the Green Machine. Item 666.00 is a so-called chief use provision, and is thus governed by TSUS General Interpretative Rule 10(e)(i), which requires that classification is controlled by the chief use of articles of the class or kind to which the imported merchandise belongs at the time of the importation. The Customs Court found two faults with appellant's arguments on this issue. First, the court noted that the chief use of the Green Machine was with the article in a different condition from that in which it was imported, namely, with the use of

the nylon cord trimmer which had been added in the United States. In addition, the court noted that there was little evidence in the record concerning the use of blade-equipped brush cutters in the United States.

OPINION

Since we agree with the Customs Court that the Green Machine is properly classifiable under item 674.70, which specially provides for it, we affirm its decision and judgment on that basis. There is no need to address the arguments concerning the propriety of classification under item 666.00.

Inclusion under item 674.70 requires two things of a tool: That it be hand-directed or controlled; and that it be powered by a self-contained, nonelectric motor. Appellant does not dispute that the first requirement is met; the outcome of the controversy therefore depends upon whether an internal combustion engine is a nonelectric motor within the meaning of that term as used in TSUS item 674.70.

[2] Appellant's argument that an internal combustion engine is not a nonelectric motor proceeds as follows: Appellant first notes that the TSUS provides for "Internal combustion engines and parts thereof" in the superior headings to items 660.40 through 660.55, and for "Nonelectric engines and motors not specially provided for and parts thereof" in the superior headings to items 660.75 through 660.86. If the internal combustion engines were to be imported separately, they would be classified under items 660.40 through 660.55 for internal combustion engines, and not under items 660.75 through 660.86 for nonelectric engines and motors. Therefore, it is argued, an internal combustion engine is not a nonelectric motor.[2]

We do not accept this reasoning. We agree with government counsel, who stated that the superior heading to items 660.75 through 660.86 identifies nonelectric engines and motors *which are not specially provided for elsewhere* in that subpart of part 4. The internal combustion engine, if imported alone, would not be classified under any of these items because it is specially provided for in items 660.40 through 660.55. The import of the superior headings for these items is not that internal combustion engines are not nonelectric motors but that they are nonelectric motors which have been specially provided for elsewhere.

Furthermore, we do not see the distinction appellant wishes us to make between "motors" and "engines" which would preclude classification of the imported merchandise under item 674.70. We see no congressional intention to draw so fine a line. We view the organization

[2] In addition, appellant argues that, if anything, an internal combustion engine is a nonelectric *engine* since Congress knew how to differentiate between a motor and an engine. This argument is that a tool powered by a nonelectric *engine* is not properly classifiable under an item requiring a tool to have a non electric *motor*.

of schedule 6 as making a general distinction between tools which are powered by electricity and those which are not.

Item 683.20, found in part 5 of schedule 6, is identical to the item under which the Green Machine was classified (674.70) except that it calls for a "hand-directed or controlled tool having a self-contained, *electric* motor." [Italic ours.] We thus read item 674.70 as requiring that a hand-directed or controlled tool be powered by a source other than electricity. Internal combustion engines are such power sources.

Adoption of appellant's view would force the classification of hand-directed or controlled tools having self-contained, internal combustion engines into some basket provision rather than into item 674.70. **[3]** One of the purposes of the TSUS, insofar as schedule 6 is concerned, was to reduce the importance of the basket provisions of the Tariff Act of 1930. See "Tariff Classification Study," schedule 6, 257 (1960). Appellant's suggested interpretation of the TSUS would not serve to produce this result.

Our conclusion is bolstered by reference to the "Summaries of Trade and Tariff Information," schedule 6, vol. 6, 127 (1968), which states [italic ours]:

> Hand tools that are powered by self-contained, nonelectric motors, other pneumatic tools, include chain saws, drills, grinders, and the like. *The principal articles of trade in this category are chain saws that are powered by internal combustion engines.* These saws can be used in remote locations where electric power is not readily available for felling trees and cutting them to length.

[4] While "Summaries of Trade and Tariff Information" is not suitable for use as evidence of congressional intent (as legislative history of the TSUS), see *Volkswagen of America, Inc.* v. *United States*, 68 Cust. Ct. 122, 128–29, C.D. 4348 (1972), *aff'd*, 61 CCPA 41, C.A.D. 1115, 494 F. 2d 703 (1974), it does show that the administrative practice has been to regard internal combustion engines as nonelectric motors for the purposes of item 674.70. We see no error in this practice.

The judgment of the Customs Court is *affirmed*.

(C.A.D. 1242)

THE UNITED STATES *v.* ENDICOTT JOHNSON CORPORATION, No. 79–19

1. Judgment of Customs Court, sustaining importer's claim that stitched cotton shoe uppers are properly classifiable as unornamented articles under TSUS item 386.50, rather than as ornamented articles under TSUS item 386.04, affirmed.

2. Stitching without a proven function is not *per se* ornamental under TSUS. It must be shown to have more than an incidental decorative effect.

3. Stitching which serves a significant purpose with respect to the character, construction, or manufacture of an article is functional.

U.S. Court of Customs and Patent Appeals, March 13, 1980

Appeal from U.S. Customs Court, C.D. 4787

[Affirmed.]

Alice Daniel, Assistant Attorney General, *David M. Cohen*, Director, *Joseph I. Liebman*, Attorney in Charge Field Office for Customs Litigation, *Madeline B. Kuflik*, Commercial Litigation Branch, attorneys of record for appellants.

John S. Rode, attorney of record for appellee, *Michael S. O'Rourke* and *Patrick D. Gill*, of counsel.

[Oral argument on December 12, 1979 by Madeline B. Kuflik for appellant and John S. Rode for appellee]

Before MARKEY, *Chief Judge*, RICH, BALDWIN, and MILLER, *Associate Judges*, and FRIEDMAN,[1] *Chief Judge*.

RICH, Judge.

[1] This appeal is from the judgment of the U.S. Customs Court, 82 Cust. Ct. —, C.D. 4787 (1979), sustaining appellee's claim that the imported merchandise, stitched cotton shoe uppers, is properly classifiable as unornamented rather than as ornamented textile articles. We affirm.

THE IMPORTED MERCHANDISE

The involved merchandise comprises cotton canvas shoe uppers imported by appellee from Japan in 1972. The uppers were of both low-cut (oxford) and high-top construction. Two parallel rows of stitching extend across the eyelets nearest the user's ankle to the midpoint of the arch area. (See illustration in opinion below.) In the footwear trade these stitches are referred to as "arch stitching." These goods, when used, were stitched to soles in the domestic manufacture of sneakers.

STATUTORY PROVISIONS

The merchandise was classified by Customs under item 380.00 of the Tariff Schedules of the United States (TSUS). At trial, however, appellant abandoned that classification and asserted that the proper classification was under item 386.04. Appellee's contention that the goods are properly classifiable under item 386.50 was sustained by the Customs Court. The relevant tariff provisions read as follows:

Schedule 3 headnotes:

* * * * * * *

3. For the purposes of the tariff schedules—

(a) the term "*ornamented*," as used with ref-

[1] The Honorable Daniel M. Friedman, Chief Judge, U.S. Court of Claims, sitting by designation.

erence to textile fabrics and other articles of textile materials, means fabrics and other articles of textile materials which are ornamented with—

(i) fibers, filaments (including tinsel wire and lame), yarns, or cordage, any of the foregoing introduced as needlework or otherwise, including—

* * * * * * *

(B) other types of ornamentation, *but not including functional stitching* or one row of straight hemstitching ajoining a hem [Italic ours];

* * * * * * *

Schedule 3, part 7, subpart B:

Subpart B headnote:

1. This subpart covers articles, of textile materials, not covered elsewhere in the tariff schedules.

	Articles not specially provided for, of textile materials:	
	Lace or net articles, whether or not ornamented, and other articles ornamented:	
386.04	Of cotton	40% ad val.
	* * * * * * *	
	Other articles, not ornamented:	
	Of cotton:	
	* * * * * * *	
386.50	Other	14% ad val.

CUSTOMS COURT

The Customs Court, after receiving the testimony and evidence on whether the arch stitching is ornamental, concluded that appellee had proved the stitches were primarily functional, not ornamental, by a preponderance of the credible evidence. The primary purpose of the stitches was considered determinative of ornamentation in light of the definition set forth in *The Baylis Brothers Inc.* v. *United States*, 60 Cust. Ct. 336, 341, C.D. 3383, 282 F. Supp. 791, 796 (1968), *affirmed*, 56 CCPA 115, C.A.D. 964, 416 F. 2d 1383 (1969). Both the claimed motivation and the resultant effect were said to converge to form footwear with strengthened uppers. The testimony of appellee's employee responsible for the imported goods and the evidence of advertising employed by subsequent purchasers were held to be persuasive of the convergence.

Appellant asserted below that the test for ornamentation is necessity rather than functionality. The stitches were said to be functional only if *necessary* for the functionality of the uppers alone. The court

rejected this test as too narrowly constricting the term "functional." The proper question was held to be simply whether *stitching* is functional.

Furthermore, the court concluded that any ornamentation provided by the arch stitches is not encompassed by the term "ornamented" in TSUS. Incidental ornamentation not having a primary adorning effect was held to be removed from the class of ornamented articles, *Blairmore Knitwear Corp.* v. *U.S.*, 60 Cust. Ct. 388, C.D. 3396, 284 F. Supp. 315 (1968). Particularly noted were the questionable visibility of white stitches on white sneakers, as in 80 percent of the articles in issue, and the minimal distinction of a contrasting arch stitch versus a similarly colored stitch which is undoubtedly functional.

The court cited *Colonial Corp. of America* v. *United States*, 62 Cust. Ct. 502, C.D. 3815 (1969), where a double row of nonfunctional, reddish stitching disposed on the back of girls' blue denim shorts was found to be ornamental, no primary function having been established for stitches which were held to be eye-catching and notably conspicuous.

OPINION

The dispute here focuses on the meaning of "ornamented" in schedule 3 of the TSUS.

We agree with the Customs Court's analysis. The first question is: Does the addition of arch stitches impart no more than an incidental, decorative effect? The next question is: Do the stitches have a functionality which is primary to any ornamentative nature? [2] An affirmative answer to either results in a nonornamental classification. If the former is resolved first, however, the latter may no longer be critical to a determination.

The ornamental effect of the arch stitches is a question of fact determined by the Customs Court. Its determination stands unless it is shown that it is either without supporting evidence or is clearly contrary to the weight of the evidence. *Pistorino & Co.* v. *United States*, 66 CCPA ——, C.A.D. 1234, 607 F. 2d 989 (1979).

We adopt both the reasoning and finding of the Customs Court regarding the nonornamental nature of the stitched goods. Appellant argues that "Congress did not intend that an importer could defeat classification as 'ornamented' merely by proving that stitching provides additional strength." **[2]** But neither did Congress intend that

[2] The rationale for finding the primary nature of the stitching, i.e., adornment versus function, is manifested in the explanatory notes of schedule 3 in the "Tariff Classification Study" compiled for Congress by the U.S. Tariff Commission. The provisions for ornamented articles are derived from par. 1529(a) of the Tariff Act of 1930. More particularly:

> Under the proposed definition of "ornamented," textile articles would *no longer be assessed* with rates of duty derived from paragraph 1529(a) on the basis of concealed, functionless pieces of braid, netting, etc. The rates derived from paragraph 1529(a) *would apply only if such materials were used primarily for ornamentation.* [Italic ours.] [Tariff Classification Study, schedule 3, p. 7 (1960).]

all forms of stitching be per se ornamental unless proved to have a function. If the importer, by a preponderance of the evidence, proves any ornamentive aspects to be incidental, added proof of functionality is not mandated.

Since the Customs Court addressed functionality, we will briefly discuss this issue. The court was correct in its finding that the stitches were primarily functional. The purpose of the stitching is evidenced by the resultant effect, *The Baylis Brothers Inc.* v. *United States*, supra. As set forth in the testimony, the instant stitching was an economic expedient. The alternative was to employ a heavier and more expensive army duck material to achieve at least equal strength.

At oral argument appellant urged that since the usual function of stitching is to attach, connect, or join, stitching is "functional" only if it serves one of those purposes. There is no indication, however, that Congress intended the term "functional" to have that narrow a meaning. The distinction Congress drew was between stitching that is ornamental and stitching that is "functional," and not among the different functions that stitching may perform. **[3]** Stitching that serves an significant purpose with respect to the character, construction, or manufacture of an article—such as strengthening the material, enabling the manufacture to produce the product more efficiently or cheaper, or producing a better product—is "functional" and not merely ornamental.

Appellant contends that the proof of functionality is based upon an invalid procedure. Again, we look to the record. Mr. Chase, one of appellant's witnesses, absolutely agreed that the imported merchandise may be effectively tested without using either a Federal test or standard.[3] No clear rebuttal of the validity of the test procedure has been presented to this court.

Having affirmatively answered both of the introductory questions, the Customs Court was correct in holding TSUS 386.50, "not ornamented," to be the proper classification. Its judgment is *affirmed*.

(C.A.D. 1242)

U.S. Court of Customs and Patent Appeals, Appeal No. 79-19

THE UNITED STATES, APPELLANT *v.* ENDICOTT JOHNSON CORPORATION, APPELLEE

MILLER, Judge, dissenting.

The Customs Court concluded, as a matter of law, that appellee's imported uppers are "not ornamented" and are properly classified

[3] Mr. Chase was division manager of quality assurance for the footwear division of Uniroyal Inc. He testified that the Uniroyal lab performs hundreds of different types of tests on canvas footwear.

under item 386.50, TSUS. This rested on its finding that a preponderance of the evidence demonstrates that the stitching in question is "primarily functional" (i.e., utilitarian) and "not ornamental" (i.e., not decorative). On review, the ultimate question is whether the Customs Court's conclusion of law is correct. However, the first question is whether there is substantial evidence that the stitching in question is primarily utilitarian.[1] As will be explained below, I am satisfied that the answer is in the negative.

EVIDENCE OF ECONOMIC PURPOSE OR EFFECT IRRELEVANT

In adopting the reasoning of the Customs Court, the majority opinion states:

> As set forth in the testimony, the instant stitching was an economic expedient. The alternative was to employ a heavier and more expensive army duck material to achieve at least equal strength.[2]

The Customs Court reasoned:

> By strengthening the fabric of which the uppers were made, the arch support stitching permitted the plaintiff to substitute a lower cost fabric and thereby reduce the cost of the footwear ultimately produced from the imported uppers. Clearly, achieving an economic benefit by using arch support stitching cannot be characterized as an "ornamental" or "decorative" purpose.

While it may be true that "achieving an economic benefit" cannot be characterized as an "ornamental" or "decorative" purpose, it was clear error for the court to conclude: "To that extent [achieving an economic benefit], the stitching clearly performs a functional purpose." As rules by this court's predecessor,

> It is rather the result produced and apparent upon the wares which must determine the classification [as "ornamented" or "not ornamented"] * * *.

This rule was recently repeated by the Customs Court in *Excelsior Import Associates, Inc.* v. *United States*, 79 Cust. Ct. 144, 148, C.D. 4726, 444 F. Supp. 780, 783 (1977), *aff'd* 66 CCPA ——, C.A.D. 1212, 583 F. 2d 513 (1978):

> (I)t is the resulting effect upon the merchandise, and not the intention of the manufacturer, which controls classification. *Colonial Corp. of America* v. *United States*, *supra* [62 Cust. Ct. 502, 504-05, C.D. 3815 (1969)] * * *.

---

[1] The Customs Court noted that the arch stitching in issue is presumed to be ornamental and that it was plaintiff's (now appellee's) burden to prove that the arch stitching is functional (i.e., utilitarian) and not ornamental (i.e., not decorative).

[2] Appellee's president, Harold McGowan, testified that to meet the retail "price point" requirement of its customer, W. T. Grant Co., it was decided to not use army duck fabric, "the strongest type of upper material, but * * * a lot more expensive" (25 cents per pair more than the fabric in the involved merchandise), and to add the arch stitching (at a cost of 2½ cents) "which would reinforce this point, which gets the most pressure when you * * * lace this shoe."

EVIDENCE OF MOTIVATION IRRELEVANT

Based on evidence of record, appellee makes such assertions as: "This was the purpose (i.e., making a stronger shoe) for which the 'arch stitching' was employed"; "Appellee caused arch stitching to be placed on each upper for the specific purpose of adding strength"; "The tie-on tag (stating 'Arch Stitching Insures Upper Strength') * * * which was placed on every pair of W. T. Grant sneakers made with Horoaka uppers, illustrates how Endicott's purpose was conveyed to the public." However, as stated by the Customs Court in *Excelsior Import Associates, Inc., supra*, it is the effect upon the merchandise and not the intention of the manufacturer which controls classification. Similarly, in *The Baylis Brothers, Inc.* v. *United States*, 60 Cust. Ct. 336, 341, C.D. 3383, 282 F. Supp. 791, 796 (1968), *aff'd* 56 CCPA 115, C.A.D. 964, 416 F. 2d 1383 (1969), the Customs Court stated:

> (T)he evidentiary issue * * * is whether the primary purpose of the stitching is for decoration rather than utility. The term "purpose" as used here * * * must, of course, be understood to mean function rather than the subjective intent of the manufacturers. It is the resultant effect of, and not the claimed motivation for, the stitching which determines the issue.

Clearly, a subjective motivation test would be administratively unworkable.

EVIDENCE OF SOME STRENGTHENING EFFECT INSUFFICIENT

As related in the majority opinion, appellant argues that "Congress did not intend that an importer could defeat classification as 'ornamented' merely by proving that stitching provides additional strength." The argument is valid. How could it be said that stitching is utilitarian if the added strength is superflous to the requirements of the article? [3] To do so would exhalt form over substance contrary to the business purpose test in revenue law administration. *Gregory* v. *Helvering*, 293 U.S. 465 (1935). The majority opinion's response to appellant's argument is that "neither did Congress intend that all forms of stitching be per se ornamental unless proved to have a function." However, this overlooks that the statute (headnote 3(a)(i)(B) of schedule 3, TSUS), under the doctrine of expressio unius est exclusio alterius (see *National Railroad Passenger Corp.* v. *National Association of Railroad Passengers*, 414 U.S. 453, 458 (1974)), demonstrates a congressional intent that all stitching be considered to provide a decorative effect unless proved to be "functional stitching or one row of straight hemstitching adjoining a hem." See *United States* v.

[3] The Customs Court said that "under defendant's reasoning, a shirt with pockets would be considered ornamented by virtue of the pockets alone because the pockets are unnecessary for a shirt to function as a shirt." However, the point is not well taken, since the pockets would be necessary for a shirt to function as a shirt equipped to carry small articles (e.g., pen, pencil, package of cigarettes, Kleenex tissues).

Field & Co., 7 Ct. Cust. Appls. 430, 431, T.D. 36985 (1917); *Morris Friedman & Co.* v. *United States*, 69 Cust. Ct. 184, 187, C.D. 4392 (1972). Thus, the Customs Court clearly erred in stating that—

> even if the utility of arch stitching had not been shown, it is clear * * * that because arch stitching does not adorn or em bellish the upper in a commercially meaningful manner, the stitch is not ornamental.

If appellee failed to sustain its burden to show the purposeful utility needed to support its claimed classification, that is the end of the case. *Compare* note 1, supra.

Appellee cites *Blairmoor Knitwear Corp.* v. *United States*, 60 Cust. Ct. 388, 392–93, C.D. 3396, 284 F. Supp. 315, 318 (1968), for the court's statement that the headnote does not define "ornamented," and that Congress did not attempt to label all braid, or all fringe, or all edging, for example, "ornamentation," but "only such as in fact served to provide a decorative effect." However, as pointed out by appellant, the court in *Blairmoor* overlooked that the "Tariff Classification Study," explanatory notes to schedule 3, p. 7 (1960), clearly shows that the headnote was intended by Congress [4] to constitute a very broad *definition* of what constitutes ornamentation:

> In addition, paragraph 1529(a) (Tariff Act of 1930) presently covers textile articles which have been embroidered or ornamented in certain ways. In the proposed provisions, the primary intention of paragraph 1529(a) is preserved intact by the development of a broad concept of ornamentation which is set forth in the *definition* of "ornamented" in headnote 3. * * * [Italic supplied.]

To the extent that *Blairmoor* conflicts with the rule of statutory construction recited in *National Railroad Passenger Corp.*, *Field*, and *Friedman*, *supra*, it should be overruled.

I agree with the majority opinion's statement that stitching that "serves a significant purpose" with respect to the character or construction of an article is "functional." However, appellee produced no evidence that the additional strength provided by the arch stitching [5]

---

[4] The "Tariff Classification Study" constitutes legislative history for the provisions of the TSUS. *Certified Blood Donor Services, Inc.* v. *United States*, 62 CCPA 66, 70, C.A.D. 1147, 511 F. 2d 572, 575 (1975).

[5] The Customs Court found that in the tests conducted by appellee the portions of the uppers without arch stitchin broke on the average at 64 pounds pressure; while the portions of the uppers with the arch stitching broke on the average at 102 pounds pressure. Further, in the tests conducted for appellant by Uniroyal, the portions of the uppers without arch stitching broke on the average at 70 pounds pressure; while the portions of the uppers with the arch stitching broke on the average at 90 pounds pressure. Appellant makes the point that appellee's tests were conducted first on uppers with arch stitching and then on uppers with the arch stitching removed, which left small holes in the fabric that would have weakened it, resulting in a wider disparity between the break points of the stitched and unstitched fabrics. Appellant also argues that, for various other specified reasons, the test results relied upon by appellee and the Customs Court do not constitute reliable evidence, but this issue need not be decided. I am satisfied that the arch stitching had some strengthening effect, and appellant's witness Chase so testified. Appellee points out that the uppers in issue are composed of two layers of fabric joined by an adhesive, the separation of which is "discouraged by the presence of the arch stitching." This, of course, would be reflected in a higher break point.

bears a purposeful relation to the requirements of appellee's sneakers. Moreover, at oral argument, appellee's counsel admitted that there was *no evidence* to show that two single rows of stitching, instead of the two double rows, would not have been sufficient to enable replacement of the more expensive duck; further, that it was appellee's burden to show that the double rows were required. On the other hand, there is substantial evidence that the arch stitching was not purposeful in relation to the *requirements of the sneakers or for replacement of the more expensive duck*. Mr. McGowan stated that the arch stitching was used to reinforce the upper at the point "which gets the most pressure when you go to lace this shoe" and "you jerk on the laces." However, there is *no evidence* showing the amount of force applied in this area, and Mr. McGowan testified that he did not know how many pounds of pressure are applied when a shoe is being laced. Appellant's witness Robert Chase, division manager of quality assurance of Uniroyal, Inc., estimated that a pressure of only approximately 10 pounds ("pulling force" is how appellee expresses it) is applied when shoes are being laced. Appellant's witness, Dan McCarthy, manager of product development (footwear) of Converse Rubber Co., testified that the instep area (the location of the arch stitches) is not a critical stress area. Appellant's witness, Dr. Clifton Scaggs, a podiatrist, testified that the arch area, in the normal situation, does not bear weight; also, that the arch of the normal foot does not need support. Such evidence shows that the strength of the *unstitched* fabric (breakpoint at 64 pounds pressure in appellee's tests or 70 pounds pressure in appellant's test) is, if anything, more than adequate to meet the requirements of appellant's sneakers—indeed, *more than adequate to enable replacement of the expensive duck*. Thus, a presumption (not rebutted) is raised that the strength added by the arch stitching was superfluous.

In view of the foregoing, it must be concluded that the finding of the Customs Court that the stitching in question is primarily utilitarian is not supported by substantial evidence. In my judgment, this is all that is required (following the rule of statutory construction recited in *National Railroad Passenger Corp.*, *Field*, and *Friedman*, *supra*) to support a holding that the Customs Court erred in concluding that appellee's imported uppers are "not ornamented" for purposes of item 386.50, TSUS. However, both the Customs Court (note 1, supra) and the majority opinion have treated headnote 3(a)(i)(B) of Schedule 3 as merely establishing a rebuttable presumption that all stitching is ornamental unless proved to be functional. For the sake of argument, and reemphasing that appellee's failure to sustain its burden to show the purposeful utility needed to support its claimed classification ends the case, we will consider

whether there is substantial evidence to rebut such a presumption in this case.

EVIDENCE OF NONDECORATIVE EFFECT INSUFFICIENT

The Customs Court's rationale for finding that the arch stitching is not decorative is expressed in its statement that—

> it must be concluded that adornment or decoration is not the arch stitching's primary effect. Significant in this respect is Mr. McGowan's testimony that 80 percent of the sneakers in issue were white with white arch stitching and that since the arch stitching was also white, it was not readily visible.

However, Mr. McGowan subsequently admitted that when trying on the sneakers *the customer* would see the stitching. Appellee's witness, John Galli, an account executive responsible for appellee's business dealings with Montgomery Ward Co. and formerly with appellee's W. T. Grant division, testified that if red stripes were put on the uppers primarily to enhance the appearance and to *attract a customer*, but incidentally happened to make the uppers stronger (although that was not the intention), he would consider the stripes decorative, "if that was the intention." Although the question and answer indicated confusion over the irrelevance of motivation, it is clear that Mr. Galli would regard the appearance *to a customer* as sufficient to support a conclusion that the effect was decorative. Thus, the "significance" of Mr. McGowan's testimony that the white arch stitching on uppers of a white sneaker was not readily visible was negated by both Mr. McGowan himself and by Mr. Galli—appellee's own witnesses.

Mr. McCarthy testified that there was no requirement he knew of in the footwear industry that ornamentation be visible "from afar," and that the consumer, to whom white stitching on a white canvas sneaker would be visible, is the one to whom design of a product would be directed. Mr. Chase stated that, in his opinion, stitching is still decorative, according to industry standards, even though only visible to the wearer at a distance of a few feet; also, that decorative stitching need not be a contrasting color with the shoe.

Mr. McCarthy stated that, so far as his company was concerned, adding any stitching except white to appellee's white sneaker would detract from eye appeal and expressed his opinion that making the arch stitching in color would present a gaudy appearance and detract from the general acceptance of the sneaker "appearance wise." He added that when his company tried to do this stitching in colors, "our sales and marketing people felt it cheapened the appearance * * *." His testimony, that in his opinion the trade would consider a white star and a white chevron shown on a catalog picture of a white canvass, Chris Evert tennis shoe to be decorative, was not challenged.

Appellee has shown no requirement in the footwear trade that a decorative feature be of a different color than that of the article with which it is associated, and the case law indicates that there is no such requirement. *United States* v. *Marubeni-Iida (American), Inc.*, 58 CCPA 118, C.A.D. 1015, 437 F. 2d 1394 (1971); *United States* v. *Florea & Co.*, 25 CCPA 292, T.D. 47244 (1934); *Shalom Baby-Wear, Inc.* v. *United States*, 68 Cust. Ct. 197, C.D. 4360 (1972); *The Baylis Brothers, Inc.* v. *United States, supra.* Both Mr. McCarthy and Mr. Chase had spent their entire careers in the footwear industry and were familiar with the trade practice with respect to decoration or design.

Also apparently significant to the Customs Court in its finding that the arch stitching is not decorative are several cited Treasury decisions, ruling that portions of a garment which simulated a functional element of the garment did not ornament the garment. Assuming that the arch stitching simulates an additional reinforcement on the sneakers, this cannot preclude classification as ornamented, because headnote 3(a)(i)(B) only excludes "functional stitching" and does not exclude stitching that merely simulates a functional element.

Accordingly, I have concluded that there is not substantial evidence to rebut a presumption that the arch stitching is ornamental.

The Customs Court's conclusion that appellee's imported uppers are "not ornamented" and are properly classified under item 386.50, TSUS, is incorrect and should be reversed.

Decisions of the United States Customs Court

United States Customs Court

One Federal Plaza

New York, N.Y. 10007

Chief Judge

Edward D. Re

Judges

Paul P. Rao
Morgan Ford
Scovel Richardson
Frederick Landis
James L. Watson
Herbert N. Maletz
Bernard Newman
Nils A. Boe

Senior Judge

Sammuel M. Rosenstein

Clerk

Joseph E. Lombardi

Customs Decision

(C.D. 4846)

NORMAN G. JENSEN, INC., A/C CALHOUN'S COLLECTORS SOCIETY, INC., PLAINTIFF *v.* UNITED STATES, DEFENDANT

Postage Stamps

Court No. 77-1-00113

I. Congress is deemed to have used the name of an article included in the Tariff Schedules of the United States (TSUS) in the commercial sense, which, in the absence of evidence to the contrary, shares the same meaning as the common meaning thereof.

II. The common meaning of the term "postage stamps" as used in

item 274.40, TSUS, is a label issued by a government or by the express authority thereof, which may be affixed to mail evidencing the prepayment of charges for the transmission thereof through its postal services.

III. The philatelic meaning of the term "postage stamps" is synonymous with the common meaning and usage of that term.

IV. The merchandise in issue, consisting of 23 carat gold strips of a dimension 1½ inches by 2 inches, bearing a design and lettering, produced and sold by private parties and when affixed to a card or letter permits the same to be transported by private carrier from an uninhabited island 7.8 miles to the mainland of Scotland, is not a postage stamp in the common meaning and use of that term.

V. A close similarity between the arrangement of the provisions in the tariff schedules and the Brussels Nomenclature justifies the use of the latter as a source of legislative history with respect to the classifications included within part 5 of schedule 2, TSUS.

VI. In schedule 2, part 5, TSUS, the Congress intended to include reproductive processes, other than those involving the transfer of ink to a substrate by an image carrier, as a "printing process" producing "printed matter." Among those processes is "embossing."

VII. For an article to be "printed matter" under part 5 of schedule 2, TSUS, the essential character of the article is imparted by the textual and pictorial matter contained thereon.

VIII. The merchandise in issue, containing a raised image and lettering which comprise approximately one-third of its total thickness, does not possess a flat shape or form within the intendment of item 790.55, TSUS.

IX. Gold leaf is characterized by its extreme thinness, having a measurement of between three- and five-millionths of an inch in thickness. Articles consisting of thin 23 carat gold strips bearing a raised design thereon cannot be classified as gold leaf under item 644.52, TSUS, in the absence of evidence establishing that the article conforms to the recognized linear measurement.

[Judgement for defendant.]

(Decided March 3, 1980)

Donohue & Donohue (*John P. Donohue, Joseph F. Donohue* and *Russell W. MacKechnie, Jr.*, at the trial and on the briefs) for the plaintiff.

Alice Daniel, Assistant Attorney General; *Joseph I. Liebman*, Attorney in Charge, Field Office for Customs Litigation (*Sidney H. Kuflik* at the trial; *Madeline B. Kuflik* on the brief), for the defendant.

BOE, Judge: In the consideration of the issues presented in the above-entitled action, the court has been led into the world of philately, into the industry of printing and graphic arts, and into the science of metallurgy.

The merchandise in question which has prompted such diverse areas of consideration consists of thin rectangular strips of 23 carat

gold, backed with an adhesive coating and protected by a release paper.[1] Each gold strip has a dimension of approximately 1½ inches in width by 2 inches in length. On the face thereof a design in a raised figuration consists of the State seal of one of the 13 original American Colonies with the name of the State inscribed immediately below. At the top left of the gold strip there is the lettering "*STAFFA*" followed by the smaller lettering "SCOTLAND". At the bottom left of the strip appears the lettering "23 carat gold" and laterally opposite thereto, the lettering "postage £6".[2]

The subject merchandise produced and exported by private parties from the United Kingdom was entered at the Port of Minneapolis–St. Paul between September 24, 1975, and November 19, 1975. The merchandise was classified upon importation as articles of gold under item 656.10, TSUS, providing:

SCHEDULE 6.—METALS AND METAL PRODUCTS

PART 3.—METAL PRODUCTS

Subpart G.—Metal Products Not Specially Provided for

Subpart G headnote:

1. Thus subpart covers only articles of metal which are not more specifically provided for elsewhere in the tariff schedules.

	Articles of precious metal, including rolled precious metal:	
	Of platinum, including rolled platinum	* * *
656,10	Of gold, including rolled gold	20% ad val.
	Of silver, including rolled silver	* * *

The plaintiff claims that the subject merchandise properly is classified as postage stamps under item 274.40, TSUS, providing:

SCHEDULE 2.—WOOD AND PAPER; PRINTED MATTER

PART 5.—BOOKS, PAMPHLETS, AND OTHER PRINTED AND MANUSCRIPT MATERIAL

*	* * * * * * *	
274,40	Postage and revenue stamps, cancelled or not cancelled, and government stamped envelopes and postal cards bearing no printing other than the official imprint thereon	Free

In the alternative the plaintiff claims the merchandise in question should be classified under item 274.70, TSUS, providing:

Photographs, engravings, etchings, lithographs, and wood cuts, and pictorial matter produced by relief or stencil

[1] Plaintiff's exhibit 7.

[2] The word "STAFFA" is italicized in order to indicate the larger lettering. The lettering "postage £6" indicates the cost of the stamp in the amount of 6 English pounds.

printing process, all the foregoing, whether bound or not bound, and not specially provided for:
Printed over 20 years at time of importation ..... * * *
Printed not over 20 years at time of importation:

* * * * * * *

274.70 Other ..... 4% ad val.

Or under item 274.90, TSUS, providing:

Printed matter not specially provided for:
Suitable for use in the production of such books as would themselves be free of duty ..... * * *
Other:

* * * * * * *

Other:
Susceptible of authorship .. * * *
274.90 Other ..... 7.5% ad val.

Or under item 790.55, TSUS, providing:

SCHEDULE 7.—SPECIFIED PRODUCTS; MISCELLANEOUS AND NONENUMERATED PRODUCTS

PART 13.—PRODUCTS NOT ELSEWHERE ENUMERATED

Subpart A.—Miscellaneous Products

* * * * * * *

790.55 Sheets, strips, tapes, stencils, monograms, and other flat shapes or forms, all the foregoing articles (except articles provided for in item 790.50) which are pressure sensitive, with or without protective liners, and whether or not in rolls ..... 10% ad val.

Or under item 644.52, TSUS, providing:

SCHEDULE 6.—METALS AND METAL PRODUCTS

PART 3.—METAL PRODUCTS

Subpart C.—Metal Leaf and Foil; Metallics

* * * * * * *

Precious metal leaf, whether unmounted or mounted on paper or equivalent backing:
Gold leaf:

* * * * * * *

644.52 Mounted ..... 3.37¢ per 100 sq. in. + 12.5% ad val.

The merchandise in issue hereafter referred to as Staffa stamps bears the name of the small island of Staffa located approximately 7.8

nautical miles off the coast of Scotland. The island, privately owned and uninhabited, has been developed as a tourist attraction. A boat or ferry carries visitors from the Scottish mainland to the island of Staffa, thence returning to the mainland on the same day. The Staffa stamps are offered for sale on the ferry trip to the island for the sum of 6 pounds (£6). A letter or card with the stamp affixed thereto may be deposited in a receptacle on the island designated for the collection of such letters or cards bearing the Staffa stamp. Staffa Marine Ltd., operator of the ferry or boat service, collects the letters and cards daily and transports the same to the mainland where a British postage stamp is then affixed and the letter or card thereupon deposited in an official British post office for transmission to the respective designated destinations.[3]

I

In the consideration of plaintiff's primary claim that the subject merchandise should be classified as postage stamps under item 274.40, TSUS, the court directs its initial attention to a determination of the meaning of the term "postage stamps" as intended by the Congress in the enactment of the tariff schedules and the concomitant determination whether the merchandise in issue falls within such an intended meaning. Recognizing that in its determination of the meaning of the term "postage stamp" as a matter of law, the court may refer to dictionaries, lexicographic authorities, and texts, as well as consider the testimony of witnesses offered with respect thereto, the respective counsel have not been reticent in proffering such advisory counsel and authoritative assistance. *United States* v. *O. Brager-Larsen*, 36 CCPA 1, C.A.D. 388 (1948); *Floral Arts Studio* v. *United States*, 46 CCPA 21, C.A.D. 690 (1958).

The plaintiff, in support of its claimed classification under item 274.40, TSUS, contends that the common meaning attributed to the term "postage stamps" is the meaning of that term as used and understood in the philatelic world and that, in fact, the term as used in the tariff schedules draws its definitive meaning therefrom. In so doing, the plantiff has presented witnesses, highly respected in the philatelic community, whose testimony as to the meaning of the term "postage stamps," as well as a variety of other terms used in the study and collection of stamps and stamplike items, is restricted solely to the philatelic usage. Thus, it would appear that the plaintiff assumes that the establishment of a specific philatelic meaning of the term "postage stamps," ipso facto, causes that meaning to be the

[3] Plaintiff's witness, Williams, testified that the £6 charge for a Staffa stamp was twice the amount of the British post office rate and, accordingly, would entitle a purchaser to have affixed to his letter or card British postage stamps in an additional amount up to £3 (r. 337). The witness further testified that the postal charge for transporting a post card within Great Britain is 7 pence or 9 pence (r. 343).

315-595 O - 80 - 6

common meaning thereof. No testimony or authority, however, has been presented in support of this reasoning.

On the contrary, it is well recognized that in including an article in the tariff schedules, the Congress is deemed to have used the name of such an article in the commercial sense, which, in the absence of evidence to the contrary, shares the same meaning as the common ordinary usage thereof. *United States* v. *Victoria Gin Co.*, 48 CCPA 33, C.A.D. 759 (1960); *United States* v. *C. J. Tower & Sons of Buffalo, N.Y.*, 48 CCPA 87, C.A.D. 770 (1961). It is self-evident from the testimony adduced as well as from an examination of the many exhibits received in evidence that the study of philately is a vocation or an avocation, as the case may be, which is specialized in character. Its glossary contains terms the usage of which in many instances is pertinent and refers solely to that field of study. The term "postage stamps," on the other hand, throughout the years had been used in the ordinary course of communication and commerce between peoples of this world. If a distinction might exist between a philatelic meaning of the term "postage stamps" and general common meaning thereof as used in the nonphilatelic world, it is improbable that the Congress intended the term to have a meaning other than the connotation commonly accepted in the everyday social and business communities of our country.

Reference to dictionary and lexicographic definitions of the term "postage stamp" offered in evidence as well as independently consulted by this court indicates the presence of two prerequisites in order to be included within the definition: (1) Its issuance or specific authorization by a government, and (2) its issuance as a prepayment of a postal charge.

In "Webster's New World Dictionary of the American Language" (1960) (defendant's exhibit F), a postage stamp is defined as:

> A *government stamp* to be put on a letter or package as a *sign that the postage has been prepaid:* It is either a small printed gummed label or a design imprinted on an envelope, postal card, etc. [Italic supplied.]

In "Funk & Wagnalls New Standard Dictionary of the English Language" (1933) (defendant's exhibit C), a postage stamp is defined as:

> A small engraved or printed label, *issued by a government*, to be affixed to letters, etc., *as evidence that the amount indicated on the stamp has been prepaid.* [Italic supplied.]

In "Black's Law Dictionary" (1968) (defendant's exhibit E) a postage stamp is defined as:

> A ticket *issued by government*, to be attached to mail-matter, that *represents the postage or fee paid* for the transmission of such matter through the public mails. [Italic supplied.]

In The American Heritage Dictionary of the English Language (1969) (defendant's exhibit B), a postage stamp is defined as:

> A small engraved usually adhesive label *issued by a government* and sold in various denominations to be affixed to items of mail as *evidence of the payment of postage*. [Italic supplied.]

The "Musson Stamp Dictionary" (1972) (defendant's exhibit G) indicates the accepted definition of a postage stamp as:

> An authorized document (stamp) in use since 1840 that is affixed to mail of any kind *that governments accept* for transmission *to indicate the prepayment of postal charges*. [Italic supplied.]

In the absence of language in the statutory provision in question expressing the intended legislative meaning, it is appropriate that reference be made to sources which may evidence such Congressional intent. *Textile Printing & Finishing Co., Inc.* v. *United States*, 49 CCPA 24, C.A.D. 789 (1962); *United States* v. *J. Eisenberg, Inc.*, 43 CCPA 105, C.A.D. 616 (1956). The "Summaries of Trade and Tariff Information" prepared and published by the then U.S. Tariff Commission, as to the description and use of postage and revenue stamps included under item 274.40, TSUS, provides:

> The postage and revenue stamps considered here include such stamps, canceled or uncanceled, and Government-stamped envelopes and postal cards (or stamped paper) bearing no printing other than the official imprint thereon. They may include offiical stamps and stamped paper of any nation, past or present.
>
> The articles here considered thus consist of two distinct but related types: (1) *Stamps and stamped paper printed by or for national governments to be used for postage and revenue purposes*, and (2) *the same kinds of stamps and stamped paper*, canceled or uncanceled, *collected by philatelists*.
>
> The value of stamps or stamped paper for official purposes is determined by their face value, and that of stamps or stamped paper for collections, largely by their rarity (Schedule 2, vol. 5 (1970) at 85 [italic supplied].)

It is clear from the foregoing that, recognizing the variety of stamps collected by philatelists and their possible respective values, it was the intention of Congress to include under item 274.40, TSUS, as duty free, only those postage stamps "printed by or for national governments." By this inclusion, such postage stamps imported into the United States solely for philatelic purposes are afforded the same duty-free treatment as a stamp "to be used for postage and revenue purposes." In the use of the term "postage stamps" under item 274.40, TSUS, the Congress has not intended to place upon such articles a meaning, as urged by the plaintiff, allegedly arising within the philatelic world. Rather, as indicated by the "Summaries," the philatelist may enjoy the gratuity of a tariff exemption only if the stamps imported for philatelic purposes are those which have been "printed by or for national governments to be used for postage and revenue purposes."

It is undisputed that the Staffa stamps are produced and sold by private parties without affirmative government authorization of any kind. The plaintiff urges, however, that the absence of a specific prohibition by the Government of Great Britain against the issuance and sale of these stamps constitutes an authorization therefor. An examination of the Post Office Act of 1969 by which the Ministry of Posts and Telecommunications and the British Post Office were created for the United Kingdom, serves to evidence the lack of recognition of the Staffa stamps as postage stamps within the meaning of this legislation.[4] Section 7 of the act provides:

> 7.—(1) The post office shall have power—
> (a) to provide postal services (including cash on delivery services) and telecommunication services; * * *. [*Id.* at 6.]

Section 23 of the act relating to the exclusive privilege of the post office with respect to the conveyance of letters provides explicitly for the sole manner by which letters might be sent and delivered other than by and through the post office:

> 23.— * * * (2) The said restriction is that the power to authorise letters to be sent, conveyed and delivered otherwise than by post and the collection of letters otherwise than by an officer of the post office which is conferred by the proviso to subsection (1) of the said section 3 and with which the post office becomes invested by virtue of the foregoing subsection *shall not be exercisable except with the consent of, or in accordance with the terms of a general authority given by,* the Minister. (Id. at 26 [italic supplied].)

No evidence is found in the record indicating the consent of or the general authority given by the Minister of Posts for the use of Staffa stamps in the conveyance and delivery of letters. On the contrary, it is undisputed that in order to permit the conveyance and delivery of a letter within the United Kingdom and/or the jurisdiction of the British Post Office, there must be placed thereon, notwithstanding the Staffa stamp that might have been affixed thereto, a postage stamp evidencing the prepayment of postage chargeable by the British Post Office.[5]

This court, therefore, concludes that the term "postage stamps" as included in item 274.40, TSUS, refers to those stamps "printed by or for national governments to be used for postage purposes," a requisite proof which has not been successfully established with respect to the merchandise in issue.

---

[4] Defendant's exhibit Y.

[5] The Post Office Act of 1969, section 123 provides:

> In the foregoing provisions of this part of this act, "postage" (except in the expression "duties of postage"), means postage chargeable by the post office, and "*postage stamp*" *shall be construed accordingly.* (Defendant's exhibit Y [italic supplied].)

The foregoing discussion of the court has been premised upon the assumption that the philatelic meaning of the term "postage stamps" might be other than that which the court has found to be the proper common meaning of the term for tariff purposes. From the evidence adduced herein, however, this court is of the opinion that a variance in meaning in fact does not exist. Although the testimony of the witnesses in behalf of the respective parties is in part conflicting, the court is satisfied that the very evidence presented by the plaintiff fails to support a contrary conclusion.

Mr. L. N. Williams, a highly respected philatelic authority, testifying in behalf of the plaintiff that the Staffa stamps are postage stamps in a philatelic meaning and usage, predicates his conclusion on: (1) The fact that the Staffa stamps perform the function of a postage stamp, i.e., they serve as evidence of prepayment of a charge for the carriage of mail; and (2) that notwithstanding the island of Staffa is uninhabited, a need for a mail service therefrom to the mainland exists. Mr. Williams, in support of his characterization, states that the term "postage stamp" is a generic term. He significantly adds, however, that in the philatelic world, the Staffa stamps are referred to and, accordingly, specifically designated as private local stamps or local stamps. In viewing the total evidence presented in its full context, including the impressive testimony of defendant's witnesses, and in the examination of the many exhibits and source materials introduced by the respective parties, the court is of the opinion that in the philatelic world the terms private local stamp and local stamp possess a different and distinct meaning from that of a postage stamp. It most clearly appears that the foregoing terms are not synonymous in the philatelic world in that by their very restrictive and specific designation, their origin, use and character, private local stamps and/or local stamps describe an article recognized as constituting a singular classification in itself.

"Scott's 1978 Standard Postage Stamp Catalogue," one of the foremost authoritative sources in the philatelic world, in its preface to volume 1, entitled "Information for Collectors," categorizes the variety of stamps, other than postage stamps, in which a collector may be concerned or interested:

CINDERELLAS AND FACSIMILES

Cinderella is a catchall term used by collectors of phantoms, fantasies, *bogus items*, municipal issues, exhibition seals, local revenues, transportation stamps, labels, poster stamps, etc. Cinderellas are not issued by any national government for postal purposes. Some cinderella collectors include local postage issues, telegraph stamps, essays and proofs, forgeries and counterfeits.

A fantasy is an adhesive created for a nonexisting stamp issuing authority. Fantasy items range from imaginary countries (King-

dom of Sedang or Principality of Trinidad) to nonexisting locals (Winans City Post), or nonexisting transportation lines (McRobish & Co.'s Acapulco-San Francisco Line). On the other hand, if the entity exists and might have issued stamps or did issue other stamps, the items are *bogus* stamps. These would include the Mormon postage stamps of Utah, S. Allan Taylor's Guatemala and Paraguay inventions, the propaganda issues for the South Moluccas and the adhesives of the Page & Keyes local post of Boston.

Both fantasies and *bogus issues* are sometimes called phantoms. (Id. at xi [italic supplied in part].) [6]

It is worthy of note that in "Scott's Standard Postage Stamp Catalogue" all stamps listed therein in the main are postage stamps having been issued by and/or under the authority of a recognized existent government.[7]

In that portion of "The Stamp Collector's Handbook" introduced into evidence by the defendant, we find a more specific definition of the term "bogus items" referred to previously in the aforecited quotation from Scott's catalogue:

Bogus Stamps

Stamps which have not been issued by a recognized or existent government. Most are of private origin, especially for disposal to collectors. This kind of material is not to be classified as stamps. They are in the category of labels and philatelically are seldom worth more than the paper on which they are printed. Examples are Bolivian railway issue, and some unauthorized Confederate stamps.[8] [Italic supplied.]

With respect to the terms private local stamps and local stamps, which plaintiff's witnesses testify are the specific designations of the Staffa stamps, "The Stamp Collector's Handbook" makes the following explanation:

Private Issues

These are divided into two classes: Those with the sanction of the government such as local issues and the U.S. 1864–1899 match and medicine revenue stamps. In this category may also be included telegraph, aviation, welfare, and other stamps serving private interests. In the other group are those which have been privately made as labels, poster stamps, and facsimiles designed to imitate or resemble regular stamps.[9]

As previously indicated herein, recognized authoritative standard postage stamp catalogues, whether British or American, do not include private local issues for the reason that they are not valid as national or

---

[6] Plaintiff's exhibit 21.

[7] Local stamps have been included in a separate and individual publication known as "Scott's United States Stamp Catalogue Specialized" (1976). Plaintiff's exhibit 22.

[8] Defendant's exhibit EE, at 103.

[9] Id.

international postage stamps. It is only in some specialized compilations, therefore, that local or private issues are so included. One such specialized compilation is the "Catalogue of British Local Stamps" by Gerald Rosen.[10] Contained in this compilation, devoted only to local stamps, is a "Report of the Stamp Trade Standing Committee—British Private Local Issues," providing in pertinent part:

> These are produced by owners of British Islands to prepay the cost of ferrying letters and parcels to the nearest point on the mainland. *They are not valid for national or international postage, and the British Post Office does not recognise them as postage stamps.* Nevertheless, some islands, such as Herm and Lundy, have been producing these locals for over 30 years, and they appear to have been of interest to visitors. Other islands have started within the last few years.
>
> These issues are not listed in standard British catalogues, but some appear in certain specialised works. The following descriptions of the various islands give some indication of the extent to which these locals may be used. In accordance with GPO regulations, local issues are placed on the backs of the envelopes. (Id. at 129 [Italic supplied].)

From the foregoing authorities it is clear that private local stamps issued for the purpose of transporting mail by private carrier from an offshore island to the mainland of the United Kingdom cannot be designated postage stamps, absent a consent or authorization by an existent government.

However, the plaintiff through its witness, L. N. Williams, urges that in the instant action an established "need" for the transportation of mail from the island of Staffa serves to cause the Staffa stamps to assume the identity of postage stamps. Except for the plaintiff's foregoing assertion, the court finds no authority supportive of this contention. In the philatelic world the determination of an established "need" for the transportation of mail is a criterion relating to the validity of and the justification for the issuance of private local stamps only.

Although unnecessary for a determination of the issue presently under consideration, it is deemed helpful in assessing the weight to be given to the testimony of the respective witnesses to examine the nature of the "need" which the plaintiff contends through its witness, Williams, to exist for the transportation of mail, a total distance of 7.8 miles, from the uninhabited island of Staffa to the Scottish mainland. In the opinion of the court this "need" in actuality is rather a promotional merchandising plan wherein an attractive and novel souvenir is sold to a tourist which may be retained by the buyer in such form or affixed to a letter or card and carried back by the ferry

[10] Plaintiff's exhibit 20.

company, transporting the tourists, to an official mail depository on the mainland where appropriate charges are paid and British postage stamps affixed for transmittal of the letter or card under the postal laws of the United Kingdom. Any "need" created is only incidental to and in furtherance of the primary purpose, i.e., the sale of a 23 carat gold souvenir.

It would appear that the witness, Williams, has not at all times voiced the opinion concerning which he testified in the trial of this action. In a publication designated "Cinderella Stamps" authored by the witness—L. N. Williams, and his brother, M. Williams, relating to bogus or phantom issues, a severe indictment is directed to the offering of souvenir labels, similar in form to the merchandise in issue, as postage stamps.[11] The conclusions therein drawn by the witness best can be expressed in the article which bears his name:

> The 1960's saw the appearance of several sets of phantoms which we unhesitatingly condemned at the time and we repeat the warning here. The promoters of these labels attempted to foist them on to the collecting public as stamps for local postal services. Had it not been for the popularity of Cinderella material generally and local stamps in particular it is certain that these so-called stamps would never have appeared on the market.
>
> *Jethou.*—An early offender was the occupier of Jethou, one of the smaller Channel Islands. According to our information from a reliable source Jethou labels are *not* local postage stamps, despite implications to the contrary published no doubt by interested parties. The total population of Jethou is four, of whom two are the occupier and his wife! Obviously there can be no possible need of a local postal service, certainly not at the time of year when there are no tourists. Yet despite this fact the Jethou labels have been overprinted "Europa 1961" and offered as local postage stamps. The only use for such an issue would be by the occupier on his own (or his wife's) mail, for which he must charge himself a fee, an obviously farcical state of affairs.
>
> In summer there is a certain amount of tourist traffic to the island, but as one could walk round it in little more than an hour nobody would want to stay long enough to engage in correspondence except possibly to hand in a souvenir postcard. However, it was far easier and quicker to post such a card on nearby Gurnsey, to which mail must, in any case, be sent. So there was no need at all for any issue of postage stamps on Jethou, *and the unoverprinted labels must be regarded simply as souvenirs, not local stamps. At best they were a bogus issue, on a par with the phantoms of the South Moluccas, Free Rumania, the Indonesian Republic, and similar items.* (Id. at 99 [italic supplied in part].)

Nor is the opinion voiced by the witness, Williams, at the trial of the within action shared by his colleagues in the philatelic world. The Cinderella Stamp Club is an association of amateur and pro-

[11] Defendant's exhibit W.

fessional philatelists who are primarily interested in local stamps, bogus and phantom issues, Christimas seals, and other miscellaneous labels. As editors, the witness, L. N. Williams, and his brother, M. Williams, published for the Cinderella Stamp Club a journal entitled "The Cinderella Philatelist." Contained in an issue thereof under date of April 1975 is an article by a contributor relating to "British Off-Shore Island Postal Services." [12] In addressing the question as to when a need might exist justifying a "local post" and the issuance of stamps, the author states:

> But assuming that any local post is legal, which set of circumstances justifies the issue of stamps? The island must have a population, and by population I mean people that live on the island year in year out. Uninhabited islands cannot, by any stretch of the imagination, be regarded as having a need for a local post. It has often been stated that certain islands, mentioned in these notes, have many summer visitors; most, if not all, are one-day visitors only. One-day visitors, no matter how many, do not constitute a need for a postal service. Any visitor who does "post" a letter or postcard is only taking advantage of the postal facility, and had this facility not been available he would not even have thought of sending any letter. [Id. at 31.]

The article continues by examining approximately 22 islands offshore of the United Kingdom with respect to size, habitants, relationship to the mainland, need for postal service, and the evaluation of the type of stamp issued in connection with each respective island. Specific reference therein to the island of Staffa and the Staffa stamps bears the following evaluation:

> As this is an uninhabited island no postal need exists.
> *Conclusion:* Stamps are labels only. [Id. at 57.]

From all of the evidence submitted, including the testimony of the highly qualified witnesses presented by the Government, the court makes the following findings with respect to the issues presented in connection with the plaintiff's claimed classification of the subject merchandise under item 274.40, TSUS:

(1) That the common meaning of postage stamps as used in in item 274.40, TSUS, is a label issued by a government which may be affixed to mail evidencing prepayment of charges for the transmission thereof through its postal service.
(2) That the Staffa stamps, the merchandise in issue, have not been issued by any government or by the specific authority thereof, and, accordingly, are not postage stamps within the purview of item 274.40, TSUS.
(3) That the philatelic meaning of the term "postage stamps" is synonymous with the common meaning and usage of that term determined by this court.

---

[12] Defendant's exhibit X.

(4) That the Staffa stamps under philatelic meaning and usage are characterized within the general classification of Cinderella stamps, which bear a meaning different and distinct from the term "postage stamps."

II

Plaintiff's alternative claims of items 274.70 and 274.90, TSUS, are classified under part 5 of schedule 2 entitled: "BOOKS, PAMPHLETS, AND OTHER PRINTED AND MANUSCRIPT MATERIAL." Headnote 1 of part 5 provides:

Part 5 headnotes:

1. Except for decalcomanias, labels, flaps, and bands, all of which are covered by the provisions therefor in this part, regardless of the nature of the printing thereon, this part covers only printed matter consisting essentially of textual and pictorial matter produced by any printing process, and similar matter in manuscript or typewritten form. The text may be set forth in any language by means of any kind of characters. With the exceptions above indicated, this part does not cover any article in which printing is merely incidental to the primary use of the article or in which printing is employed mainly for coloration or to produce a decorative or novelty effect (see part 4 of this schedule).

It is not in dispute that the raised design on the merchandise in question is produced by an embossing process. In seeking a determination of plaintiff's claimed classification by the court, the parties present a single question of law, to wit—Is embossing a "printing process" whose product can be "printed matter" within the purview of part 5 of schedule 2, TSUS.

Extended testimony has been introduced by the plaintiff and the defendant in their respective efforts to establish the meaning of the term "printing." The meaning of this term, as contended by the plaintiff, is best characterized by one of its witnesses who testified that in the printing trade, the term "printing" is understood to mean "the transference of, or the duplication of an image on a material." With respect to the term "printing process," the witness testified that the term means "many of various processes that will transfer or reproduce an image on a material." [13]

The defendant, on the other hand, contends that the term "printing" bears a more restrictive and definitive meaning in that ink is a necessary ingredient in the "printing process" and refers to the transfer of an ink or an inklike substance from a plate or other image carrier to a substrate. In support thereof the defendant refers to the elements of the "printing process" enumerated in the book, "The Printing Industry" (1967) by Vicor Strauss:

All printing production entails a combination of four elements:

[13] Plaintiff's witness Stanchfield (r. 268).

> (1) A printing-image carrier, (2) paper or another printing stock, (3) printing ink, and (4) a printing press. Each of these four elements contributes in some measure to the appearance of printed images. [Id. at 12.]

However, it is not the function of the court to determine in this proceeding the meaning of the term "printing" in the printing trade, but rather, to discern the congressional intent with respect to its meaning as used in the enactment of the tariff schedules. *United States* v. *S. H. Kress & Co.*, 46 CCPA 135, C.A.D. 716 (1959). In the "Tariff Classification Study Submitting Report" (November 15, 1960), it is acknowledged that "(t)he 'Brussels Nomenclature' and the 'Standard Industrial Classification Manual' exerted the greatest influence on the arrangement of the proposed revised schedules." Id. at 8. Reference to the "Explanatory Notes to the Brussels Nomenclature" as a source of legislative history with respect to the classifications included within part 5 of schedule 2, TSUS, is appropriate. Particularly is this true in view of the close similarity between the arrangement of the provisions in the two respective schedules, *United States* v. *Abbey Rents*, 66 CCPA—C.A.D. 1213, 585 F. 2d 501 (1978).

Chapter 49 of the "Brussels Nomenclature" is entitled "PRINTED BOOKS, NEWSPAPERS, PICTURES AND OTHER PRODUCTS OF THE PRINTING INDUSTRY; MANUSCRIPTS, TYPESCRIPTS AND PLANS." A close similarity exists between the headnotes to schedule 2, part 5, TSUS, and the "Explanatory Notes" for chapter 49 of the "Brussels Nomenclature" providing in pertinent part:

> With the few exceptions referred to below, *this chapter covers all printed matter of which the essential nature and use is determined by the fact of its being printed with characters or pictorial matter.*
>
> On the other hand, paper, paperboard or cellulose wadding, or *articles* thereof, *in which the printing is merely incidental to their primary use * * * fall within chapter 48*, and printed textile *articles * * * in which the printing is mainly for decorative or novelty purposes and does not affect the essential character of the goods, fall within chapter 61.*
>
> For the purpose of this chapter, the term "printed" includes not only reproduction by the several methods of ordinary hand and mechanical printing (lithography, offset printing, heliography, photogravure, etc.), but also be engraving, reproduction by duplicating machines, *embossing*, photography, etc., irrespective of the form of the characters in which the printing is executed (e.g., letters of any alphabet, figures, shorthand signs, Morse or other code symbols, Braille characters, musical notations, pictures, and diagrams). *The term does not, however, include coloration, decorative or repetitive-design printing.* [Italic supplied; italic in orginal omitted.]

There is also a close similarity between many of the items classified under schedule 2, part 5, TSUS, and the items classified under chapter

49 of the "Brussels Nomenclature." Particularly relevant is heading 49.11 of the latter schedule providing:

> 49.11 Other printed matter, including printed pictures and photographs.

In items 274.50–.70, schedule 2, part 5, TSUS, it will be noted that Congress likewise has included "photographs." With reference thereto, headnote 2(d) of part 5 of schedule 2 provides in pertinent part:

> *Part 5 headnotes:*
>
> * * * * * * *
>
> 2. For the purposes of this part—
>
> * * * * * * *
>
> (d) the term "*photographs*" embraces only pictures other than motion pictures, produced on photosensitive materials, and includes positive and negative images on exposed, or exposed and developed, photographic film. [Italic in original.]

When photographic film is exposed to light, the exposure produces an *invisible* change in the layer or coating (emulsion) on the photographic film, called the latent image, which does not become visible until the film is developed. *See* 10 McGraw-Hill Encyclopedia of Science and Technology, at 175–76. Inasmuch as the invisible image on exposed, but not yet developed, photographic film is classified under part 5 of schedule 2 of TSUS, it must be presumed that the Congress intended such photographic film to be considered therein as "printed matter * * * produced by any printing process." [14] A similar presumption must be made with respect to item 274.45, TSUS, under part 5 of schedule 2, providing:

> 274.45 X-ray film exposed, whether or not developed.* * *

To accept defendant's argument that "printed matter" under part 5 must be produced by a process which transfers ink from an image carrier (e.g., a plate or type) to a substrate, producing a visible image, would be to contravene the clear intent of Congress. The defendant further contends that inasmuch as the terms "embossed" and "printed" are referred to separately in several provisions in part 4 of schedule 2, TSUS, the Congress, by so doing, has recognized that "embossed" articles are not "printed." Accordingly, it is contended that in part 5 of schedule 2, the term "printed" should exclude the term "embossed."

The presumption that Congress intends a word or a phrase used in different parts of the tariff schedules to bear the same meaning throughout the schedules is applicable *only* in the absence of any clear

[14] In a case decided under the Tariff Act of 1913, the Board of General Appraisers held that photographs were not "printed matter" as used in the Tariff Act, presumably because the photographic image is not produced by printing type or ink. *See Meadows, Wye & Co.* v. *United States*, 38 Treas. Dec. 653, T.D. 38505 (1920).

indication of a contrary intent.[15] In headnote 1 of part 5, "printing," as employed to produce textual and pictorial matter, is specifically distinguished from "printing," as employed for coloration or a decorative effect, provided for in part 4 of schedule 2, TSUS. The intention of Congress not to attribute the same meaning to the word "printing" in all classifications in which the term is included was evidenced in the Tariff Act of 1930. Paragraphs 1409 and 1410 thereof would indicate that it has been the intention of Congress that the determination as to whether a product of a particular process constitutes "printing" depends upon the particular use to which the product is put. The court, therefore, concludes that Congress intended to include reproductive processes, other than those involving the transfer of an ink to a substrate by an image carrier, as "printing processes" producing "printed matter" classifiable under part 5 of schedule 2, TSUS. Among those reproductive processes is "embossing."

Notwithstanding that embossing may be "printed matter" within the purview of part 5 of schedule 2, the court is satisfied that this determination alone is not dispositive of the issue as to whether the embossed merchandise in the instant case can be classified under item 274.70 or 274.90, TSUS, as claimed by plaintiff. Headnote 1 of part 5 of schedule 2 provides in relevant part that with certain enumerated exceptions:

> * * * this part covers only printed matter consisting *essentially* of textual and pictorial matter produced by any printing process * * *. [Italic supplied.]

The tariff schedules do not define the term "essentially of." In construing this phrase, particularly in the context of headnote 1, the court again finds instructive the "Explanatory Notes" to chapter 49 of the "Brussels Nomenclature" which provides in relevant part:

> With the few *exceptions* referred to below, this Chapter covers all printed matter of which the essential nature and use is determined by the fact of its being printed with characters or pictorial matter. [Italic in original.]

This court is in agreement with the foregoing and is of the opinion that for an article to be "printed matter" under part 5, the essential character of the article must be imparted by the textual and pictorial matter contained thereon. Neither a visual examination of the Staffa stamps nor the evidence submitted relating thereto permits such a conclusion.

The merchandise in question is solely distributed in the United States by Calhoun's Collectors Society, Inc. Calhoun's produced an advertising brochure concerning the Staffa stamps.[16] At the top of the

[15] *Productal Chemical Co.* v. *United States*, 74 Cust. Ct. 138, C.D. 4598 (1975).

[16] Defendant's exhibit J.

first inside page the brochure states, "See how surprisingly little it now costs to acquire gold." On the same page it describes the merchandise as "[a] rare series of stamps for collectors and investors * * * minted from pure 23 KARAT GOLD." Later in the brochure the Staffa merchandise is described as:

> An unusually inexpensive and guaranteed loss-free way to invest in the great collectibles and gold boom.
>
> Precious metal has always been favored as a hedge against inflation. Especially when worked into items that have artistic value as well. A Picasso plate in sterling, for example, has double value. Its artistic value as a Picasso *and* its monetary value as silver.
>
> * * * * * * *
>
> * * * [The Official-Seal Stamps] have exceptional collector's value because they are extraordinarily rare stamps—minted by hand in high relief, not merely printed. *And* they have definite monetary value as well, because they are made of *pure 23K gold instead of paper.* [Italic in original.]

The excerpts from the advertising brochure, which the court finds to be the only evidence offered pertinent to the inquiry concerning the essential character of the Staffa stamps, indicate to the court that the desirability of the merchandise is derived equally, if not principally, from the gold as a source of monetary value having an excellent investment potential and as a unique and novel substrate for the design thereon. It cannot be said that the essential character of the merchandise is imparted from the printed matter. *See Marshall Co.* v. *United States*, 67 Cust. Ct. 316, C.D. 4291, 334 F. Supp. 643 (1971). In viewing the evidence in its entirety, the court finds that the plaintiff has not provided the quantum of evidence sufficient to establish that the essential character of the merchandise in question is the printing thereon. In sum, the plaintiff has failed to rebut the presumption of correctness that "attaches not only to the ultimate conclusion of the collector that the goods are properly classified in a particular category, but also to every subsidiary fact necessary to support that conclusion." *See United States* v. *New York Merchandise Co.*, 58 CCPA 53, 58, C.A.D. 1004, 435 F. 2d 1315 (1970).

III

Plaintiff further claims in the alternative that the merchandise in question should be classified under item 790.55, TSUS, which provides in pertinent part:

> Sheets, strips, tapes, stencils, monograms, and other flat shapes or forms, all the foregoing articles (except articles provided for in itme 790.50) which are pressure sensitive, with or

without protective liners, and whether or not in rolls..... * * *

In schedule 7, part 13, subpart A, "pressure sensitive" is defined as:

Subpart A headnotes:

* * * * * * *

2. The term "*pressure sensitive*," as used in items 790.50 and 790.55, refers to articles which have an adhesive coating on one or both surfaces that will adhere to other surfaces upon the application of pressure only.[17]

Defendant contends that the articles are not "flat" within the meaning of subpart A. Inasmuch as Congress has not defined "flat" as used in 790.55, TSUS, the court again resorts to the use of standard lexicographic sources and other extrinsic aids. "Flat" is defined in Webster's Third New International Dictionary (1966) as:

1. Having or marked by a continuous surface that is horizontal or nearly so without significant curvature or inclination and without *noteworthy* elevations or depression * * *. [Italic supplied.]

With respect to the above definition, the following exchange between defendant's counsel and plaintiff's witness, Blank, on cross-examination, proves informative:

Q. Would you have any idea approximately how high that image is raised?—A. My guess would be around two to three-thousandths of an inch. I could measure that but I don't have the instruments here.

Q. Considering the relative thinness of this stamp, would that be a considerable raised portion?—A. Yes. Possibly one-third of it, or something like that (r. 245–46).

In the production of the Staffa stamps the lettering and design thereon are created by raising a part of the substrate from the remaining portion thereof. The only evidence submitted relating to the contours of the surface of the subject merchandise is the above-quoted testimony—approximating the raised image to comprise about one-third of the stamp's total thickness. Such an elevation in the form of a raised design manufactured or produced upon a substrate, which in its original form possessed no elevations or depressions, indeed, must be deemed "noteworthy" when viewed in relation to the article of which it has become a part and is not incidental thereto.

---

[17] Plaintiff alleged in paragraph 14 of its complaint that the Staffa articles were pressure sensitive. Defendant in paragraph 14 of its answer responded to paragraph 14 of plaintiff's complaint with "Denies." The defendant has admitted on page 70 of its brief that the fact as to the merchandise being "pressure sensitive" is not in dispute. Therefore, the court concludes that the "pressure sensitive" characteristic of the merchandise was never in dispute and will be taken as established. An examination of the articles in question (plaintiff's exhibit 7) reveals that some of the articles have what appears to be an adhesive coating.

It is the opinion of the court that the surface of the Staffa stamps is not flat within the intendment of part 13, subpart A of schedule 7.[18]

Accordingly, the subject merchandise cannot be classified under item 790.55, TSUS, as sought by plaintiff's alternative claim.

IV

The evidence submitted by the plaintiff in support of its last claimed alternative classification, item 644.52, TSUS, at best, can be characterized as negligible. In attempting to meet its burden of proof, the plaintiff relies on representative samples of the merchandise in question (plaintiff's exhibit 7), and a single conclusional statement contained in the testimony of one of its witnesses.[19]

It is well recognized that an exhibit said to be representative of the merchandise in question may be a potent witness. *Marshall Field & Co.* v. *United States*, 45 CCPA 72, C.A.D. 676 (1958). However, to present an exhibit to the court without submitting accompanying evidence, by testimony or otherwise, indicating wherein it conforms to the specifications commonly recognized to describe the article concerning which classification is claimed, causes the exhibit to be of little value.

It is acknowledged without dispute that the substrate of the Staffa stamps consists of thin sheets of 23 carat gold. The only testimony, however, which serves to relate in any manner this merchandise to gold leaf is found in the answer to the question of plaintiff's counsel as to whether the witness would characterize the Staffa stamps as gold metal leaf, mounted. In answer thereto, the witness stated:

> A. Yes. They could be classified as gold metal leaf mounted, because that, in effect, is what they are.[20]

This testimony in its most favorable light can be deemed little more than a conclusion of the witness and gives no assistance to the court in determining whether specifications and characteristics of the gold substrate of the Staffa stamps fall within the meaning of gold leaf as contemplated by item 644.52, TSUS. As our appellate court has stated with respect to testimony of a similar nature in the case of *Keer, Maurer Company* v. *United States*, 46 CCPA 110, C.A.D. 710

---

[18] The "Explanatory Notes" to heading 48.05 of the "Brussels Nomenclature," though perhaps not a source of legislative history for 790.55, TSUS, provides insight into the meaning of "flat" in reference to embossed articles:

> 48.05—PAPER AND PAPERBOARD, CORRUGATED (WITH OR WITHOUT FLAT SURFACE), CREPED, CRINKLED, EMBOSSED OR PERFORATED, IN ROLLS OR SHEETS.
>
> This heading covers a variety of papers and paperboards in rolls or sheets having the common characteristic of having been *worked during or after manufacture in such a way that they are no longer flat* or of uniform surface. It includes:
>
> * * * * * * *
>
> (3) * * * *Embossed* papers and boards are those on which a perceptible unevenness of surface has been obtained * * * by pressing it with engraved or embossed metal plates. * * * [Italic supplied.]

[19] Plaintiff's witness, Blank.

[20] R. 232.

(1959): "[W]e believe this testimony to be at most mere *declarations of an essential ultimate fact in issue*, without any corroborating evidence." Id. at 115. [Italic supplied.]

In the absence of any definitive meaning of the term "gold leaf" contained in the tariff schedules, the court again will turn to dictionaries and other recognized authoritative sources in order to determine the congressional intent as to the meaning of that term. In Webster's Third New International Dictionary (1966), "gold leaf" is defined as:

> A sheet of gold ordinarily varying from four to five millionths of an inch in thickness that is used esp. for gilding and lettering on glass.

The "Summaries of Trade and Tariff Information" (1968), schedule 6, volume 5 at 135, describes "metal leaf" and, in particular, "gold leaf":

> Metal leaf is extremely thin metal usually made by beating thin metal sheets, first between sheets of parchment, then between sheets of animal membrane (goldbeater's skin) or, more commonly now, between sheets of thin, tough plastic. Gold leaf (items 644.46–.52), the thinnest metal leaf, is between three- and four-millionths of an inch thick. Mounted gold leaf is leaf that has a backing of tissue paper adhering to it for ease in handling * * *.

The court is satisfied that the term "gold leaf" possesses a meaning more specific and definitive than the description—a "thin" or "very thin" sheet of gold metal, as the merchandise in question is generally referred to throughout plaintiff's testimony. The foregoing definitions indicate that to constitute an article denominated "gold leaf," it must quality in particular with respect to a specific specification, i.e., the thickness thereof must be within three- to five-millionths of an inch.

As to what thickness the Staffa stamps comprising exhibit 7 may be, the evidence is silent. Accordingly, this fact remains undetermined. A visual examination of the exhibit by the court cannot and does not serve as a substitute for the establishment by the evidence of the specific linear measurement recognized to be determinative of an article known as "gold leaf." Indeed, it might well be that evidence could have been brought before this court sufficient to establish the Staffa stamps should be classified as gold leaf, mounted, under the provisions of item 644.52, TSUS. Suffice it to say, it is the conclusion of the court that the plaintiff has failed to sustain its dual burden of proof as to this claimed alternative classification.

For the reasons hereinbefore discussed in connection with its determination of the successive claimed alternative classifications, it is the opinion of the court that the plaintiff has failed to overcome the presumption of correctness attaching to the classification of the subject merchandise by the Customs officials.

Let judgment be entered accordingly.

Decisions of the United States Customs Court

Customs Rules Decision

(C.R.D. 80-2)

SCM CORPORATION, PLAINTIFF *v.* UNITED STATES (BROTHER INTERNATIONAL CORPORATION, PARTY-IN-INTEREST), DEFENDANT

Court No. 77-4-00553

Plaintiff, an American manufacturer of typewriters, contests a negative injury determination by International Trade Commission under the Antidumping Act of 1921 concerning typewriters imported from Japan. Plaintiff contends that the Commission erred in its interpretation of the term "injury" as it appears in the statute. 19 U.S.C. 160(a). Plaintiff and defendant move for summary judgment. The court found that the International Trade Commission in its initial determination failed adequately to articulate the bases for its negative injury determination and ordered that the proceedings be stayed for such necessary time, not to exceed 90 days, as the ITC may require to supply the court with a more specific and explicit statement of reasons supporting its conclusions.

ADMINISTRATIVE LAW—JUDICIAL REVIEW—SCOPE

In reviewing an ITC "no-injury" determination, the court, at a minimum, must determine whether the ITC determination was arbitrary, capricious, an abuse of discretion or otherwise not in accordance with the law. *Citizens to Preserve Overton Park, Inc.* v. *Volpe*, 401 U.S. 402, 91 S.Ct. 814 (1971). Although this standard of review is a limited one, the court nonetheless is required to engage in a "searching and careful" inquiry into the facts, and the ITC's conclusions are not shielded from a "thorough, probing, in-depth review" by the court, *Citizens to Preserve Overton Park, Inc.* v. *Volpe*, *supra*, to determine whether the ITC has exercised its discretion in a manner consistent with legislative intent. *Atchison, Topeka & Santa Fe Railway Co.* v. *Wichita Board of Trade*, 412 U.S. 800, 93 S.Ct. 2367 (1973); *Schaffer Transportation Co.* v. *United States*, 355 U.S. 83, 78 S.Ct. 173 (1957).

ADMINISTRATIVE LAW—JUDICIAL REVIEW—RECORD FOR REVIEW

To enable the court to determine whether the ITC's discretion has been exercised in a manner which is neither arbitrary nor

capricious, the ITC's determination must "delineate and make explicit the basis upon which discretionary action was taken," *Dunlop* v. *Bachowski*, 421 U.S. 560, 95 S. Ct. 1851 (1975), so that the court is not compelled to guess at the rationale underlying the ITC's determination.

ADMINISTRATIVE LAW—JUDICIAL REVIEW—SPECIFICITY OF ADMINISTRATIVE DETERMINATION

For purposes of judicial review, the ITC's determination must "articulate a rational connection between facts found and the choice made," *Burlington Truck Lines* v. *United States*, 371 U.S. 156, 83 S. Ct. 239 (1962), so that the court can determine whether the basis on which the ITC exercised its discretion is consistent with the mandate from Congress. *Schaffer Transportation Co.* v. *United States*, 355 U.S. 83, 78 S. Ct. 173 (1957).

ADMINISTRATIVE LAW—PRACTICE & PROCEDURE—STAY OF PROCEEDINGS

When the International Trade Commission fails adequately to articulate the bases for its conclusions in a negative injury determination under the Antidumping Act of 1921, the reviewing court may stay proceedings to provide the ITC with an opportunity to submit an explicit statement of the reasons supporting its conclusions, so that the court may properly carry out its duty of judicial review. *United States* v. *Bianchi & Co.*, 373 U.S. 709, 83 S. Ct.1409 (1963).

(Dated March 7, 1980)

Frederick L. Ikenson for the plaintiff.

Alice Daniel, Assistant Attorney General; *David M. Cohen*, Director, Commercial Litigation Branch (*Sheila N. Ziff* on the brief), for the defendant.

Tanaka, Walders & Ritger (*H. William Tanaka, Lawrence R. Walders* and *Wesley K. Caine* on the briefs) for the party-in-interest.

RE, Chief Judge: In this American manufacturer's action, plaintiff, a domestic manufacturer of typewriters, seeks to review the negative injury determination of the International Trade Commission in "Portable Electric Typewriters From Japan," investigation No. AA 1921-145 under the Antidumping Act of 1921, as amended (19 U.S.C. 160, et seq. (1970)), ITC Pub. 732, 40 F.R. 27079 (1975).

In brief, under the Antidumping Act of 1921, a special dumping duty may be assessed upon imported merchandise that is being sold in the United States at less than its fair value. As stated in a prior opinion of the court in this case, an American manufacturer may file a petition with the Secretary of the Treasury to protest actual or threatened injury to an industry or the establishment of an industry. The Secretary has the duty to determine whether that class or kind of imported merchandise is being sold, or is likely to be sold in the United States or elsewhere, at less than fair value.

If the Secretary issues an affirmative finding of sales at less than

fair value, the matter is referred to the International Trade Commission. The Commission must then determine whether an industry in the United States is being or is likely to be injured, or is prevented from being established, by reason of the less-than-fair-value sales. If the Commission makes an affirmative finding of injury or likelihood of an injury, the Secretary of the Treasury must publish in the Federal Register notice of his determination as well as the findings of the Commission. Under the Antidumping Act these administrative decisions comprise the "dumping findings." As a consequence of the findings of "dumping," the imported merchandise is assessed with an additional "special dumping duty."

In this action, after receipt of the plaintiff's petition, the Secretary of the Treasury initiated an investigation which resulted in the publication of a determination that sales of portable electric typewriters from Japan were being or were likely to be sold at less than fair value. Thereupon, the International Trade Commission conducted its investigation and rendered a negative determination, i.e., that an industry in the United States is not being or likely to be injured, or prevented from being established, by reason of the less-than-fair-value sales. In summary, the Commission reached a negative injury determination, and therefore no dumping findings were published. See *SCM Corporation* v. *United States* (*Brother International Corporation, Party-in-Interest*), 435 F. Supp. 1224, 1225–1226, 79 Cust. Ct. 163 (1977).

This case has a long history. See *SCM Corporation* v. *United States International Trade Commission et al.*, 404 F. Supp. 124 (D.D.C. 1975); *Same*, 549 F. 2d 812 (D.C. Cir. 1977) (reversing the dismissal by the district court, and remanding with instruction to retain jurisdiction until SCM brought action in the U.S. Customs Court to enable the Customs Court to determine whether it had jurisdiction to review a negative injury determination of the ITC in an American manufacturer's action under section 516 of the Tariff Act of 1930, as amended); *SCM Corporation* v. *United States* (*Brother International Corporation, Party-in-Interest*), 435 F. Supp. 1224, 79 Cust. Ct. 163 (1977) (motion for a three-judge panel denied); *Same*, 450 F. Supp. 1178, 80 Cust. Ct. 226 (1978) (upheld jurisdiction in the U.S. Customs Court); *Same*, 81 Cust. Ct. 159, C.R.D. 78–13 (1978) (motion for discovery); *Same*, 473 F. Supp. 791, 82 Cust. Ct. 351 (1979) (claim of executive privilege).

What is sought to be reviewed by the present cross-motions for summary judgment by plaintiff and defendant, respectively, is the negative injury determination made by the International Trade Commission. Specifically, plaintiff contends that the ITC erred in its interpretation of the term "injury," as it appears in the Antidumping Act of 1921 (19 U.S.C. 160(a)).

This is not the first case in this court which presents questions as to the scope and standard of judicial review of administrative determinations during dumping proceedings. This case, however, in addition to the scope and standard of review to be applied to an ITC negative injury determination, raises the question of the degree of specificity required by that determination in order that it may be properly reviewed by the court.

The scope or standard of judicial review of administrative action is often set forth in the applicable statute. No provision, however, is made in the case of judicial review of an ITC injury determination in a dumping proceeding. Although the Trade Agreements Act of 1979 provides that the Commission's final determinations, such as the one now before this court, are subject to judicial review under a "substantial evidence" test, the present action was commenced prior to the enactment of that provision.

Nevertheless, in a series of decisions, the Court of Customs and Patent Appeals has established that the scope of review applicable to the determinations of the U.S. Tariff Commission,[1] the predecessor of the ITC, is limited to whether the Commission acted within its delegated authority, correctly interpreted the statute, and correctly applied the law. *Kleberg* v. *United States*, 21 CCPA 110, T.D. 46446 (1933); *City Lumber Co.* v. *United States*, 311 F. Supp. 340, 64 Cust. Ct. 826 (1970), *aff'd*, 457 F. 2d 991, 59 CCPA 89 (1972); *Imbert Imports* v. *United States*, 475 F. 2d 1189, 60 CCPA 123 (1973). See also recent discussion by Judge Newman in *Armstrong Bros. Tool Co. et al.* v. *United States, etc.*, 84 Cust. Ct.—, C.D. 4838 (1980), *appeal pending*. In the case at bar, the fundamental question presented is whether the ITC correctly interpreted and applied the Antidumping Act of 1921 in making its negative injury determination.

In defining the proper role of judicial review of administrative action involving the exercise of discretion, the Supreme Court has stated that:

> In all cases agency action must be set aside if the action was "arbitrary, capricious, an abuse of discretion, or otherwise not in accordance with law" or if the action failed to meet statutory, procedural, or constitutional requirements. *Citizens to Preserve Overton Park, Inc.* v. *Volpe*, 401 U.S. 402, 413–414, 91 S. Ct. 814 (1971).

In *Overton Park*, the question presented was whether the action of the Secretary of Transportation, pertaining to the construction of an interstate highway through a public park in Tennessee, was invalid without formal findings. The lower courts held, and the Supreme

[1] Renamed the U.S. International Trade Commission by section 171(a) of the Trade Act of 1974 (19 U.S.C. 2231(a)) (1979).

Court agreed, that, under the governing statute, the agency determination did not require formal findings; and, that the only hearing required was "nonadjudicatory, quasi-legislative" in nature. Nevertheless, the Supreme Court held that, even under the arbitrary and capricious standard of review, the reviewing court is required "to engage in substantial inquiry." The review function was explained as follows:

> Certainly, the Secretary's decision is entitled to a presumption of regularity. [Citations.] But that presumption is not to shield his action from thorough, probing, in-depth review. * * *
>
> Scrutiny of the facts does not end, however, with the determination that the Secretary has acted within the scope of his statutory authority. * * * To make this finding [that the determination was not arbitrary, capricious, an abuse of discretion, or otherwise not in accordance with law] the court must consider whether the decision was based on *a consideration of the relevant factors* and whether there has been a clear error of judgment. * * * Although this inquiry into the facts is to be searching and careful, the ultimate standard of review is a narrow one. The Court is not empowered to substitute its judgment for that of the agency. [Italic added.] 401 U.S. at 415–416.

When the administrative determination is not based upon a record, courts have limited the scope of their inquiry to the administering authority's statement of the reasons for its determination. See cases cited in *Suwannee Steamship Co.* v. *United States*, 435 F. Supp. 389, 392–393, 79 Cust. Ct. 19 (1977). Thus, in *Dunlop* v. *Bachowski*, 421 U.S. 560, 95 S. Ct. 1851 (1975), the Supreme Court required the agency (the Secretary of Labor) to provide a statement of reasons, and the essential facts upon which the decision was based, even though neither the statute nor its legislative history said anything about either findings or reasons.

The Court reasoned that since a reviewing court was not authorized to substitute its judgment for that of the agency, the agency must indicate explicitly the basis upon which the discretionary action was taken. This will enable the court to determine, with a degree of certainty, whether or not the discretionary action taken by the agency was exercised in a manner that was neither arbitrary nor capricious. See *Dunlop* v. *Bachowski*, 421 U.S. at 571–572, *citing De Vito* v. *Shultz*, 300 F. Supp. 381, 383 (D.D.C. 1969).

Accordingly, however narrow the standard of judicial review, the Commission's determination is not shielded from a "thorough, probing, in-depth review." Furthermore, the court is required to engage in a "searching and careful" inquiry into the facts.

To perform the function of meaningful judicial review, the court requires the assistance and collaboration of the administrative agency. The cooperative effort of agency and court, and the necessity for

"principled decisionmaking," was stated as follows by Chief Judge Bazelon in *Environmental Defense Fund Inc.* v. *Ruckelshaus*, 439 F. 2d 584 (D.C. Cir. 1971):

> We stand on the threshold of a new era in the history of long and fruitful collaboration of administrative agencies and reviewing courts. * * *
>
> Judicial review must operate to ensure that the administrative process itself will confine and control the exercise of discretion. Courts should require administrative officers to articulate the standards and principles that govern their discretionary decisions in as much detail as possible. * * * When administrators provide a framework for principle decisionmaking, the result will be to diminish the importance of judicial review by enhansing the integrity of the administrative process, and to improve the quality of judicial review in those cases where judicial review is sought. 439 F. 2d at 597–598.

Judge Leventhal, writing for the same court, has referred to the "salutary principle of judicial restraint" combined with "an awareness that agencies and courts together constitute a 'partnership' in furtherance of the public interest." *Greater Boston Television Corp.* v. *FCC*, 444 F. 2d 841, 851 (D.C. Cir. 1970), *cert. den.*, 403 U.S. 923 (1971). He noted that although a court may defer to administrative expertise, it must nevertheless undertake a study of the record "to satisfy itself that the agency has exercised a reasoned discretion, with reasons that do not deviate from or ignore the ascertainable legislative intent." 444 F. 2d at 850.

The following statements from the *Greater Boston Television Corp.* case are particularly applicable here:

> The function of the court is to assure that the agency has given reasoned consideration to all the material facts and issues. This calls for insistance that the agency articulate with reasonable clarity its reasons for decision, and identify the significance of the crucial facts, a course that tends to assure that the agency's policies effectuate general standards, applied without unreasonable discrimination. 444 F. 2d at 851.

In the case of administrative action based upon a record, courts have engaged in close scrutiny of that record, especially with reference to technical and specialized matters, in order to review the administrative action in issue. *Ethyl Corporation* v. *Environmental Protection Agency*, 541 F. 2d 1 (D.C. Cir. 1976), *cert. den.*, 426 U.S. 941 (1976). In an extensive discussion pertaining to the proper application of the "arbitrary and capricious" standard of review, in the *Ethyl Corporation* case the Court of Appeals for the District of Columbia stated:

> This standard of review is a highly deferential one. It presumes agency action to be valid. *Citizens to Preserve Overton Park* v. *Volpe*, 401 U.S. 402, 415, 91 S. Ct. 814, 823 [Citations.] Moreover, it forbids the Court's substituting its judgment for

> that of the agency, *Citizens to Preserve Overton Park* v. *Volpe*, [*supra*,] * * *, and requires affirmance if a rational basis exists for the agency's decision. [Citations.]
>
> This is not to say, however, that we must rubberstamp the agency decision as correct. To do so would render the appellate process a superfluous (although time consuming) ritual.

The court continued:

> There is no inconsistency between the deferential standard of review and the requirement that the reviewing court involve itself in even the most complex evidentiary matters; rather, the two indicia of arbitrary and capricious review stand in careful balance. The close scrutiny of the evidence is intended to educate the court. * * * The enforced education into the intricacies of the problem before the agency is not designed to enable the court to become a superagency that can supplant the agency's expert decisionmaker. To the contrary, the court must give due deference to the agency's ability to rely on its own developed expertise. *Market Street Railway* v. *Railroad Commission*, 324 U.S. 548, 559–561, 65 S. Ct. 770, 776–777 * * *. 541 F. 2d at 34–36.

Concurring in the *Ethyl Corp.* case, Judge Leventhal, in an analysis of the role of a court in reviewing a challenge of technical administrative determinations, wrote:

> The aim of the judges is not to exercise expertise or decide technical questions, but simply to gain sufficient background orientation. * * * When called upon to make de novo decisions, individual judges have had to acquire the learning pertinent to complex technical questions in such fields as economics, science, technology and psychology. Our role is not as demanding when we are engaged in review of agency decisions, where we exercise restraint, and affirm even if we would have decided otherwise so long as the agency's decisionmaking is not irrational or discriminatory.
>
> The substantive review of administrative action is modest, but *it cannot be carried out in a vacuum of understanding.* Better no judicial review at all than a charade that gives the imprimatur without the substance of judicial confirmation that the agency is not acting unreasonably. (Italic added.) 541 F. 2d at 69.

It is obvious that a reviewing court cannot perform its function if the administrative agency, here the ITC, has not properly discharged its responsibility which "flows naturally from the functional relationship existing between reviewing court and administrative agency." *Public Media Center* v. *FCC*, 587 F. 2d 1322 (D.C. Cir. 1978). Judge Tamm, quoting from *American Smelting & Refining Co.* v. *FPC*, 494 F. 2d 925, 945, *cert. den.*, 419 U.S. 882, emphasized that "the failure of an administrative agency to articulate the reasons for a particular decision makes meaningful review of that decision impossible." He added that a "reviewing court must be presented with

the rationale underlying the importance of factual distinctions as well as the factual distinctions themselves." 587 F. 2d at 1331–1332.

These principles of judicial review of administrative determinations, as developed by case law, are especially pertinent to determinations made by the ITC.

In the 1958 amendments to the Antidumping Act, Congress directed the Commission, then the Tariff Commission, to publish its injury determination, "with a statement of the reasons therefor, whether such determination is in the affirmative or in the negative." Public Law 85–630, section 1(3), 72 Stat. 583 (1958) (19 U.S.C. 160(c)).

The congressional intent, for including the requirement of a statement of reasons in a Commission determination, is explained in the legislative history of the 1958 amendments to the Antidumping Act:

> *Provision is also made for published notice of decisions, whether affirmative or negative with reasons therefor.* The Treasury Department will be required to publish such reports on its determinations with respect to sales at less than fair value and the Tariff Commission will be required to publish such reports on its determinations with respect to injury. *In the past there has been no established practice on this point, except that U.S. Tariff Commission decisions have been published, sometimes with, sometimes without reasons.* Mandatory publication will enable all concerned to know what are the developments in connection with the Antidumping Act, and what types of cases are being found within or without the scope of its application. [Italic added.] S.R. 85–1619, U.S. Code Cong. & Ad. News, 1958, vol. 2, p. 3501.

The Trade Act of 1974, which substantially revised the antidumping law, embodies a dual statutory command for the International Trade Commission. Thus, section 201(d) of the Antidumping Act of 1921 provides:

> (2) The Secretary, upon determining whether foreign merchandise is being, or is likely to be, sold in the United States at less than its fair value, and the Commission, upon making its determination under subsection (a) of this section, shall publish in the Federal Register such determination, whether affirmative or negative, *together with a complete statement of findings and conclusions, and the reasons or bases therefor,* on all the material issues of fact or law presented (consistent with confidential treatment granted by the Secretary or the Commission, as the case may be, in the course of making its determination). [Italic added.] Public Law 93–618, section 321(a)(2), 88 Stat. 2041, 2043 (1974) (19 U.S.C. 160(d)(2)).

The statute explicitly directs the Commission to include in its determination a *complete* statement of findings and conclusions, *and* the reasons or bases for those findings and conclusions.

The language used in this two-fold statutory command is patterned after the Administrative Procedure Act, 5 U.S.C. 557(c), which

requires that certain administrative decisions include a statement of "findings and conclusions, and the reasons or bases therefor." To this APA language, Congress, in the Trade Act of 1974, added the word "complete" to make clear its intention concerning ITC determinations.

In the legislative history of the Trade Act of 1974, the Senate Finance Committee indicated the intended purpose of the additional statutory requirement for a "complete" statement of findings and conclusions:

> *Complete statement of determinations.*—Section 201(c) (2) of the act, as amended by the House bill, would require the Secretary, upon making his LTFV sales determination, and the Commission, upon making its injury determination under the act, to publish such determinations in the Federal Register and include a statement of findings and conclusions, and the reasons or bases thereof, on all material issues of fact or law presented. The committee amended this provision (section 201 (d) (2) of the act under the committee bill) to require that the statement published be a *complete* statement, and to permit procedures consistent with confidential treatment granted by the Secretary or the Commission. *In adding the word "complete" to the bill, the committee is making clear its intent that sufficient information be provided in the case of each determination to enable all interested parties to be aware of the reasons for, and details of, such determinations and to effectively protect their rights in proceedings before the Department of the Treasury and the Commission, as well as in the courts.* [Italic added.] S.R. 93–1298 at 171, U.S. Code Cong. & Ad. News, 1974, vol. 4, p. 7186.

Elsewhere in its report, the Finance Committee again expressly indicated its expectations concerning the required clarity of these determinations:

> The committee believes strongly that Commission determinations under this and other statutes, ought to be clear, well documented, and, nearly as possible, decisive. S.R. 93–1298 at 121.

Although this action was commenced prior to the enactment of the Trade Agreements Act of 1979, its legislative history, nevertheless, indicates a continuing congressional intention to require ITC determinations to be sufficiently specific to enable the courts to determine whether the facts support the findings.

In considering the proposed Trade Agreements Act of 1979, the House Committee on Ways and Means reviewed the affirmative and negative decisions of the ITC over the past five years. The committee concluded that the decisions, on the whole, have been consistent with a "material injury" test, and expressed its intention to have that standard continue. Significantly, the committee noted:

> However, this statement does not indicate approval of all the affirmative or negative decisions of the ITC with respect to the issue of injury, *as judgments as to whether the facts in a particular*

case actually support a finding of injury are for the ITC and the courts to determine. [Italic added.] H.R. 96–317 at 46 (1979).

The committee also expressed its expectations on the specificity required of determinations made by the ITC:

> It is expected that in its investigation the ITC will continue to focus on the conditions of trade and development within the industry concerned. For one industry, an apparently small volume of imports may have a significant impact on the market; for another the same volume might not be significant. Similarly, for one type of product, price may be the key factor in determining the amount of sales elasticity, and a small price differential resulting from the amount of the subsidy or the margin of dumping can be decisive; in others the size of the margin may be of lesser significance. *For this reason the committee intends that the ITC determination, as well as any dissenting or separate views of the individual commissioners, be specific in his statement of findings of fact and conclusions of law.* [Italic added.] Ibid.

Whenever reasons are required of administrators for their decisions, the Supreme Court has indicated the purpose for the articulation of reasons, and the degree of specificity required in the statement of reasons.

In *Atchison, Topeka & Santa Fe Railway Co.* v. *Wichita Board of Trade*, 412 U.S. 800, 93 S. Ct. 2367 (1973), the Supreme Court reaffirmed the rule of the *Chenery* cases, *SEC* v. *Chenery Corp.*, 318 U.S. 80, 63 S. Ct. 454 (1943); 332 U.S. 194, 67 S. Ct. 1575 (1947), and stated:

> [T]his Court has relied on the "simple but fundamental rule of administrative law," *SEC* v. *Chenery Corp.*, 332 U.S. 194, 196 (1947), that the agency must set forth clearly the grounds on which it acted. For "[w]e must know what a decision means before the duty becomes ours to say whether it is right or wrong." *United States* v. *Chicago, M., St. P. & P.R. Co.*, 294 U.S. 499, 511 (1935). See also *Phelps Dodge Corp.* v. *NLRB*, 313 U.S. 177, 197 (1941); *SEC* v. *Chenery Corp.*, 318 U.S. 80, 94 (1943). And we must rely on the rationale adopted by the agency if we are to guarantee the integrity of the administrative process. *Id.*, at 88. 412 U.S. at 807.

Significantly, in *Atchison* the Supreme Court recognized that even where the Court's review is limited (as in Interstate Commerce Commission rate cases), the Court, nevertheless, "must be able to discern in the Commission's actions the policy it is now pursuing, so that it may complete the task of judicial review—in this regard, to determine whether the Commission's policies are consistent with its mandate from Congress." 412 U.S. at 805–806.

Schaffer Transportation Co. v. *United States*, 355 U.S. 83, 78 S. Ct. 173 (1957), teaches that even when Congress has given wide authority to a Commission, it is the duty of a reviewing court to insure that the

Commission's actions are harmonious with the national policy expressed in the enabling act. In the language of the Supreme Court:

> To see whether those policies have been implemented we look to the Commission's own summary of the evidence, and particularly to the findings, formal or otherwise, which the Commission has made. Just as we would overstep our duty by undertaking to evaluate the evidence according to our own notions of the public interest, we would shirk our duty were we summarily to approve the Commission's evaluation of the record without determining that the agency's evaluation had been made in accordance with the mandate of Congress. 355 U.S. at 88.

Although Mr. Justice Frankfurter dissented in *Schaffer*, and stated that Congress gave the Commission the widest area for exercising its experience and left very little room for judicial review, he nevertheless expressed the view that the majority opinion:

> * * * may serve a useful purpose if it will lead the Interstate Commerce Commission, despite its enormous volume of business, to *a more detailed and illuminating formulation of the reasons for the judgment that it reaches* even in that class of cases where Congress has relied on the Commission's discretion in enforcing the most broadly expressed congressional policy. Since the orders in such cases also fall under judicial scrutiny, it is desirable to insist upon precision in the findings and the reasons for the Commission's action. [Italic added.] 355 U.S. at 95.

More recently, the Supreme Court in *Bowman Transportation, Inc.* v. *Arkansas-Best Freight System*, 419 U.S. 281, 286, 95 S. Ct. 438 (1974) referred to its decision in the second *Chenery* case (332 U.S. 194 (1947)) and said that it would "uphold a decision of less than ideal clarity if the agency's path may reasonably be discerned." In *Burlington Truck Lines* v. *United States*, 371 U.S. 156, 168, 83 S. Ct. 239 (1962), the Supreme Court, however, indicated that it would not uphold a decision if the agency did not "articulate any rational connection between the facts found and the choice made."

In *Burlington*, Mr. Justice White, in reviewing an order of the Interstate Commerce Commission, observed that:

> There are no findings and no analysis here to justify the choice made, no indication of the basis on which the Commission exercised its expert discretion. * * * Expert discretion is the lifeblood of the administrative process, but "unless we make the requirements for administrative action strict and demanding, *expertise*, the strength of modern government, can become a monster which rules with no practical limits on its discretion." *New York* v. *United States*, 342 U.S. 882, 884 (dissenting opinion). [Italic in original.] 371 U.S. at 167.

The rationale for requiring an agency to articulate its reasons has been expressed by the U.S. Court of Appeals for the District of Columbia. Distinguishing between findings and reasons, the court, in *Citizens*

Association of Georgetown, Inc. v. *Zoning Commission of the District of Columbia*, 477 F. 2d 402 (D.C. Cir. 1973), stated:

> Reasons differ from findings in that reasons relate to law, policy, and discretion rather than to facts and even where findings are not required, a disclosure of an agency's reasons is often desirable. 477 F. 2d at 409.

More recently, that court, in *Matlovich* v. *Secretary of the Air Force*, 591 F. 2d 852, 857 (D.C. 1978), highlighted "the need for the court, and the complaining party, to be given some helpful insight into the agency's reasoning."

In cases in which an administrative agency's determination must include the agency's "findings," the courts distinguish between basic findings and ultimate findings.

The Supreme Court has stated that, "[t]he ultimate finding is a conclusion of law or at least a determination of a mixed question of law and fact." *Helvering* v. *Tex-Penn Oil Co.*, 300 U.S. 481, 491, 57 S. Ct. 569 (1937).

It is not sufficient if an administrative decision states only ultimate findings. The decision must include "the evidential, rather than the ultimate facts; that is to say, the primary facts from which, through a process of reasoning and inference, the ultimate facts may be determined." *Meeker* v. *Lehigh Valley R. Co.*, 236 U.S. 412, 427, 35 S. Ct. 328 (1915). An ultimate finding in the statutory language is not enough in the absence of a basic finding to support it. *United States* v. *Pierce Auto Lines*, 327 U.S. 515, 533, 66 S. Ct. 687 (1946).

Basic findings, those which support the ultimate findings, must be more detailed than the ultimate findings. In the words of the Supreme Court:

> We have repeatedly emphasized the need for clarity and completeness in the basic or essential findings on which administrative orders rest. [Citations.] *Colorado-Wyoming Gas Co.* v. *FPC*, 324 U.S. 626, 634, 65 S. Ct. 850 (1945). See also *Morgan* v. *United States*, 298 U.S. 468, 480, 56 S. Ct. 906 (1936).

In his treatise on *Administrative Law*, vol. 2, section 16.06, Professor Davis explains:

> An ultimate fact is usually expressed in the language of a statutory standard. Examples: The rate is reasonable; the applicant is fit, willing and able to provide the service; the action is in the public interest; the respondent has refused to bargain collectively; the injury occurred in the course of employment. * * *
>
> The basic findings are those on which the ultimate finding rests; the basic findings are more detailed than the ultimate finding but less detailed than a summary of the evidence.

The distinction between basic or underlying facts, and ultimate facts, was described in *Saginaw Broadcasting Co.* v. *FCC*, 96 F. 2d

554 (D.C. Cir. 1938), *cert. den.*, 305 U.S. 613 (1938). In *Saginaw*, the Court of Appeals for the District of Columbia Circuit stated:

> In discussing the necessary content of findings of fact, it will be helpful to spell out the process which a commission properly follows in reaching a decision. The process necessarily includes at least four parts: (1) Evidence must be taken and weighed, both as to its accuracy and credibility; (2) from attentive consideration of this evidence a determination of facts of a basic or underlying nature must be reached; (3) from these basic facts the ultimate facts, usually in the language of the statute, are to be inferred, or not, as the case may be; (4) from this finding the decision will follow by the application of the statutory criterion. 96 F. 2d at 559.

These authorities, together with the specific statutory directions pertaining to ITC determinations, establish the criteria against which the ITC's no-injury determination may be tested in determining whether the agency decision is adequate to enable this court to perform its review function.

In this case, the ITC's determination was based upon information it gathered upon its own initiative, as well as upon a hearing in which the parties appeared with counsel. At the hearing, evidence was taken, testimony was given under oath, the parties had the opportunity to cross-examine witnesses,[2] and a full transcript of the proceedings was made. Consequently, the ITC determination was at least partially made upon the basis of a record. Clearly, under the pertinent authorities, the court may scrutinize the record closely in order to perform its function of judicial review. See, e.g., *Ethyl Corporation* v. *Environmental Protection Agency, supra.*

The ITC, by a vote of 3 to 2, with one commissioner abstaining, determined that an industry in the United States is not being injured or is not likely to be injured by reason of the importation and sale at less than fair value of portable electric typewriters from Japan.

In support of its no-injury conclusion, the majority, in its "Statement of Reasons," addressed two issues relevant here:

1. What is the "industry" most likely to be affected by the imported electric typewriters?

2. Is import penetration of a market alone a basis for finding "injury"?

The legislative history of the Trade Act of 1974 is set out in "U.S. Code Congressional and Administrative News," 1974, vol. 4, pp. 7186 et seq., and includes S.R. 93–1298 of the Senate Finance Committee.

---

[2] In *Pasco Terminals, Inc.* v. *United States*, 477 F. Supp. 201, 83 Cust. Ct.—(1979), *appeal pending*, Judge Maletz emphasized the fact-finding nature of ITC proceedings in order to support his determination that the parties had no *right* to confrontation and to cross-examination. Id. at 213, 216. In the present case, in which the parties to the ITC proceedings were accorded opportunity to confront adverse witnesses and cross-examine them, the record that was produced is properly before the court.

In discussing the concepts of "injury" and "industry," the Finance Committee explained:

> *Certain concepts and terms associated with Antidumping Act practices.*—The committee received proposals to include statutory language regarding certain concepts and terms, such as "technical dumping," industry, injury, causation linkages, and reconsideration of agency determinations and findings, embodied in the Antidumping Act. These proposals were not accepted for the reason that the committee believes the matters involved are adequately treated under existing practices and are best left to individual case determinations without additional statutory guidelines. * * *
>
> Conceptually, the Antidumping Act is not directed toward forcing foreign suppliers to sell in the U.S. market at the same prices that they sell at in their home markets. Rather, the Act is primarily concerned with the situation in which the margin of dumping contributes to underselling the U.S. product in the domestic market, resulting in injury or likelihood of injury to a domestic industry. *Such injury may be manifested by such indicators as suppression or depression of prices, loss of customers, and penetration of the U.S. market.* When clear indication of injury, or likelihood of injury, exists there would be reason for making an affirmative determination. The Antidumping Act is designed to discourage and prevent foreign suppliers from using unfair price discrimination practices to the detriment of a United States industry. * * * [Italic added.]
>
> The Antidumping Act refers to "an industry in the United States." There are no qualifications as to the kind of industry or the number of industries that might be adversely affected by the less-than-fair-value imports under consideration. Although the Commission's investigations have usually been concerned with an industry consisting of the domestic-producer facilities engaged in the production of comparable articles (i.e., articles like the imported articles), a number of investigations have been concerned with the domestic facilities engaged in the production of articles which, although unlike the imports, are nevertheless competitive therewith in domestic markets. In any case, the industry is a national industry involving all domestic facilities engaged in the production of the domestic articles involved. S.R. 93–1298 at pp. 178–180.

The majority did not specifically refer to, or rely upon, the "indicators" of injury mentioned in the Finance Committee report. Nevertheless, it discussed "import penetration of the U.S. market," and "acknowledged" that the imports of portable electric typewriters from Japan, sold at less than fair value, obtained a "significant share of the U.S. market for portable typewriters."

The majority, in addressing the issue of market penetration, considered the relevant market to be the market "for portable typewriters," apparently encompassing all portable typewriters including both electric and manual. Since SCM was the sole domestic producer of

portable typewriters, both electric and manual, it was perforce the sole domestic supplier of the U.S. market for portable typewriters.

As a factor to be considered in determining injury to an industry, the issue pertaining to import penetration of a market is of obvious significance. Together with suppression or depression of prices and loss of customers, market penetration is one of the three "indicators" of injury specifically mentioned in the Senate Finance Committee report previously quoted.

What is not clear to the court is whether all three indicators, any one of them, or any combination of more than one, must be found before there is adequate reason for making an affirmative injury determination.

Notwithstanding the "acknowledged" fact that the less than fair value imports obtain a "significant share" of the U.S. market, the majority concluded that "imports penetration alone is not an adequate basis for determining injury."

There is nothing stated in the majority's "Statement of Reasons" to explain that conclusion. The statement that "imports penetration alone" is not an adequate basis for an injury determination may or may not be consistent with legislative intent. Absent a clear articulation of the reasons which led to that conclusion, the court cannot determine whether the ITC has exercised its discretion in a manner which neither deviates from nor does violence to the manifest legislative intent.[3]

The majority, in response to the "what is the industry" issue, considered two alternatives: Either facilities devoted to the production of only portable electric typewriters; or, facilities devoted to the production of all portable typewriters, both electric and manual. In either instance, the "industry" consisted of the facilities of SCM Corporation, the sole U.S. producer of portable electric and portable manual typewriters. On this issue the majority concluded:

> Our determination in this case would be the same irrespective of whether we considered the U.S. industry to consist of the facilities used in the production of all portable typewriters or only portable electric typewriters. 40 F.R. 27080 (1975).

---

[3] At a symposium on the Tokyo Round of Multilateral Trade Negotiations (MTN), it was observed that the role of lawyers is to insure that "administrative procedures fully reveal the facts and reasoning upon which official governmental decisions are based, and that judicial review is rigorous and meaningful." Herzstein, "The Role of Law and Lawyers Under the New Multilateral Trade Agreement," in 9 Georgia Journal of International and Comparative Law 177, 205 (1979). In commenting upon the procedural changes made in antidumping proceedings by the Trade Act of 1974, special reference was made to the "more detailed determinations" required under that Act. See address by Deputy Assistant Secretary Suchman, Mar. 11, 1975, before the International Trade Committee of the Federal Bar Association, Washington, D.C., on "The U.S. Antidumping Law: After the Trade Reform Act," in "Annual Report of the Secretary of the Treasury on the State of the Finances for the Fiscal Year Ended June 30, 1975," at 358.

SCM contends that the ITC erred in failing to consider a third alternative industry, facilities devoted to the production of only portable manual typewriters, as a separate industry.

As it appears, there were three alternative industries which could have been considered by the ITC: All portable typewriters, both electric and manual; only portable electric typewriters; or only portable manual typewriters. In reaching its conclusion as to what was the affected "industry," the majority considered the first two alternatives, but not the third.

The majority in its "Statement of Reasons" sets forth neither findings nor reasons to explain why it limited its choice of "industry" to only two of the three alternatives, and why it excluded from its consideration the portable manual typewriter "industry." Hence, the court is not able to determine whether or not the ITC exercised a reasoned discretion consistent with the ascertainable legislative intent pertaining to an affected "industry" within the meaning of the Antidumping Act.

Government counsel, in its brief, attempts to supply the reasons missing from the ITC determination by arguing that, due to SCM's dominant position in the domestic portable typewriter industry, it could shift production from portable electric to portable manual typewriters in response to market alterations. Therefore, it submits that the ITC's determination, that all portable typewriter production is an industry, was appropriate.

The obvious answer to government counsel's argument is that it is, at best, a "post hoc rationalization" by counsel which is unacceptable, and cannot be used as a substitute for the ITC's absent or missing reasoning. The Supreme Court has repeatedly refused to accept the arguments of an agency's counsel in appraising the validity of the agency's decisions.

> For the courts to substitute their or counsel's discretion for that of the Commission is incompatible with the orderly functioning of the process of judicial review. This is not to deprecate, but to vindicate * * * the administrative process, for the purpose of the rule is to avoid "propel[ling] the court into the domain which Congress has set aside exclusively for the administrative agency." 332 U.S., at 196. [*Securities Commission* v. *Chenery Corp.*] *Burlington Truck Lines, Inc.* v. *United States*, 371 U.S. 156, 169, 83 S. Ct. 239 (1962).

As stated in *Investment Company Institute* v. *Camp, Comptroller of the Currency*, 401 U.S. 617, 628, 91 S. Ct. 1091 (1971):

> Congress has delegated to the administrative official and not to appellate counsel the responsibility for elaborating and enforcing statutory commands.

In passing upon an ITC final determination, this court cannot, and should not, attempt to act as a "superagency" adjudicating de novo the controversy which Congress has assigned to the ITC for determination. The court, however, can and should equire the ITC to perform its assigned responsibility as directed by the applicable statutory provisions.

Congress has not only directed the ITC to state its determinations but has also required the agency to explain those determinations. The statutory requirements of "a statement of reasons," imposed by the 1958 amendments to the Antidumping Act, and the "complete statement of findings and conclusions" imposed by the Trade Act of 1974, are clearly consistent with applicable decisional law. For the ITC these requirements are specifically mandated by the pertinent statutory provisions.

The ITC determination in this case nominally includes the majority's "Statement of Reasons." In substance, however, the statements are really mixed conclusions of ultimate facts and statutory interpretation, rather than reasons. The ITC has stated the conclusions which presumably are the result of its reasoning, but it has neither supplied nor articulated the reasons which support those conclusions.

An illustration is the conclusion that significant market penetration alone is not an adequate basis for determining injury. This is a major policy determination with broad and significant implications in the interpretation and administration of the antidumping law. Clearly, Congress intended the ITC to develop and refine the very general concept of injury as it is applied to individual cases. This responsibility is not adequately discharged in a case in which the ITC determination is neither clearer nor more specific than the statutory language itself.

When the ITC fails to delineate and make explicit the basis for its conclusions, by articulating a rational connection between the facts found and the discretionary action taken, the court cannot decide, as it must, whether the ITC has exercised a reasoned discretion consistant with legislative intent.

In order for the court to perform its function of judicial review, this proceeding is stayed, and the ITC will be afforded an additional opportunity to supply this court with the reasons supporting its conclusions. See *United States* v. *Bianchi & Co.*, 373 U.S. 709, 718, 83 S.Ct. 1409 (1963). Cf. *Camp* v. *Pitts*, 411 U.S. 138, 143, 93 S.Ct. 1241 (1973).

Accordingly, it is ordered that this proceeding be stayed for such necessary time, not to exceed 90 days, as the ITC may require to supply the court with a more specific and explicit statement of reasons

for the conclusions that: (1) The affected "industry" was limited to, alternatively, the facilities devoted to the production of all portable typewriters, or, the production of portable electric typewriters; and, (2) significant market penetration by less than fair value imports alone is not an adequate basis for determining injury.

Decisions of the United States Customs Court

Abstracts

Abstracted Protest Decisions

DEPARTMENT OF THE TREASURY, *March 10, 1980.*

The following abstracts of decisions of the United States Customs Court at New York are published for the information and guidance of officers of the customs and others concerned. Although the decisions are not of sufficient general interest to print in full, the summary herein given will be of assistance to customs officials in easily locating cases and tracing important facts.

ROBERT E. CHASEN,
Commissioner of Customs.

DECISION NUMBER	JUDGE & DATE OF DECISION	PLAINTIFF	COURT NO.	ASSESSED	HELD	BASIS	PORT OF ENTRY AND MERCHANDISE
				Par. or Item No. and Rate	Par. or Item No. and Rate		
P80/39	Ford, J. March 4, 1980	Novo Enzyme Corporation et al.	77-10-04368, etc.	Item 437.49 5%	Item 437.46 Free of duty	Novo Enzyme Corporation v. U.S. (C.D. 4806)	New York Rennet
P80/40	Maletz, J. March 4, 1980	Shayne Knitwear, Inc.	77-9-03784	Item 382.58 37.5¢ per lb. + 20% (jackets, blouses and pants)	Item 791.75 6% Dutiable as entireties on basis of export value; said value is invoice unit price	J. C. Penney Purchasing Corporation v. U.S. (C.D. 4671)	New York Ladies 3-piece suits; entireties

Decisions of the United States Customs Court

Abstracts

Abstracted Reappraisement Decisions

DECISION NUMBER	JUDGE & DATE OF DECISION	PLAINTIFF	COURT NO.	BASIS OF VALUATION	HELD VALUE	BASIS	PORT OF ENTRY AND MERCHANDISE
R80/30	Rao, J. March 4, 1980	Yoshida International, Inc. YKK Zipper (USA), Inc., et al.	73-12-03363, etc.	Constructed value	Equal to invoiced unit prices plus 8.5%, net, packed	Agreed statement of facts	New York Zippers and/or zipper parts, classified under item 745.70, 745.72 or 745.74
R80/31	Ford, J. March 4, 1980	C M Import & Export Corp.	R65/1864, etc.	United States value	F.o.b. unit invoice prices plus 50%	Agreed statement of facts	San Francisco Electron receiving tubes
R80/32	Ford, J. March 5, 1980	C M Import & Export Corp.	R62/6180, etc.	United States value	F.o.b. unit invoice prices plus 50%	Agreed statement of facts	New York Electron receiving tubes
R80/33	Watson, J. March 5, 1980	Ciba Chemical and Dye Company	R66/8558, etc.	United States value	U.S. selling prices, less 1% cash discount as determined by customs officer at time of appraisement; less 25.5% representing profit and general ex-	U.S. v. Geigy Chemical Corporation et al. (C.A.D. 1155)	New York Benzenoid dyestuffs

DECISION NUMBER	JUDGE & DATE OF DECISION	PLAINTIFF	COURT NO.	BASIS OF VALUATION	HELD VALUE	BASIS	PORT OF ENTRY AND MERCHANDISE
					penses usually made in U.S. on sales of dyestuffs of same class or kind; less costs of transportation and insurance from place of shipment to place of delivery in amounts determined by customs officer at time of appraisement; divided by 1.40 or such other factor applied by customs officer, to allow for customs duties payable on imported dyestuffs		
R80/34	Watson, J. March 5, 1980	Geigy Chemical Corporation	R66/08206, etc.	United States value	U.S. selling prices, less 1% cash discount as determined by customs officer at time of appraisement; less 25.5% representing profit and general expenses usually made in U.S. on sales of dyestuffs of same class or kind; less costs of transportation and insurance from place of shipment to place of delivery in amounts determined by cus-	U.S. v. Geigy Chemical Corporation et al. (C.A.D. 1155)	New York Benzenoid dyestuffs

					toms officer at time of appraisement; divided by 1.40 or such other factor applied by customs officer, to allow for customs duties payable on imported dyestuffs		
R80/35	Watson, J. March 5, 1980	Geigy Chemical Corporation	R66/19178, etc.	United States value	U.S. selling prices, less 1% cash discount as determined by customs officer at time of appraisement; less 24.2% representing profit and general expenses usually made in U.S. on sales of dyestuffs of same class or kind; less costs of transportation and insurance from place of shipment to place of delivery in amounts determined by customs officer at time of appraisement; divided by 1.40 or such other factor applied by customs officer, to allow for customs duties payable on imported dyestuffs	U.S. v. Geigy Chemical Corporation et al. (C.A.D. 1155)	New York Benzenoid dyestuffs

Appeal to U.S. Court of Customs and Patent Appeals

APPEAL 80–20.—Armstrong Bros. Tool Co. et al. *v.* United States (Daido Corporation, Steelcraft Tools Division, Party-in-Interest).—AMERICAN MANUFACTURERS' ACTION—HAND TOOLS FROM JAPAN—NEGATIVE INJURY DETERMINATION—LTFV—ANTIDUMPING ACT—SUMMARY JUDGMENT. Appeal from C.D. 4838.

In this case plaintiffs-appellants, American manufacturers and/or wholesalers of certain hand tools, brought an action in the U.S. Customs Court under the provisions of 28 U.S.C. 1582(b) (1976), 28 U.S.C. 2632(a) (1976) and 19 U.S.C. 1516(c) (1976) to contest the determination by the U.S. Tariff Commission (now the U.S. International Trade Commission) in "Wrenches, Pliers, Screwdrivers, and Metal-Cutting Snips and Shears From Japan," investigation No. AA1921–141 (39 F.R. 38133 (1974)), under the Antidumping Act of 1921, as amended (19 U.S.C. 160, et seq. (1970)), that an industry in the United States is not being injured or is not likely to be injured or is not prevented from being established by reason of imported wrenches, pliers, screwdrivers, and metal-cutting snips and shears from Japan that are being, or are likely to be, sold at less than fair value (LTFV). Plaintiff specifically alleged that the Commission's negative injury determination was erroneous as a matter of law, was arbitrary and capricious, and was not supported by substantial evidence. Plaintiffs sought an order setting aside the Commission's determination and directing the Secretary of the Treasury to publish a finding of dumping, with the result that dumping duties would be assessed, where appropriate, on entries of the subject hand tools from Japan.

Daido Corp., Steelcraft Tools Division, the party-in-interest, is the consignee of New York consumption entry No. 77–471888, covering merchandise which falls within the description "wrenches, pliers, screwdrivers, and metal-cutting snips and shears from Japan."

The action was before the Customs Court on plaintiff's motion for summary judgment and the cross-motions for summary judgment by defendant-appellee and party-in-interest-appellee. The court denied

the motion of plaintiffs-appellants and granted the cross-motions of defendant-appellee and party-in-interest-appellee.

It is claimed that the Customs Court erred in finding and holding that the "negative" injury determination of the U.S. Tariff Commission in "Wrenches, Pliers, Screwdrivers, and Metal-Cutting Snips and Shears From Japan," investigation No. AA1921-141, supra, was not arbitrary; in finding and holding that the "negative" injury determination was supported by substantial evidence; in finding and holding that the "negative" injury determination was not erroneous as a matter of law; in not directing the Secretary of the Treasury to publish a finding of dumping covering wrenches, pliers, screwdrivers, and metal-cutting snips and shears from Japan; in not directing the Regional Commissioner of Customs at New York (a) to ascertain the foreign market (or constructed) value and the purchase (or exporter's sales) price of any wrenches, pliers, screwdrivers, and/or metal-cutting snips or shears from Japan covered by New York Seaport consumption entry No. 77-471888 of July 20, 1977, and (b) if and to the extent that the foreign market (or constructed) value exceeds the purchase (or exporter's sales) price, to assess dumping duties; in denying the motion of plaintiffs-appellants for summary judgment; in granting the cross-motions of defendant-appellee and party-in-interest-appellee for summary judgment; in permitting the Secretary of the Treasury to act contrary to law; in finding and holding for the defendant-appellee and party-in-interest-appellee, contrary to law.

International Trade Commission Notices

Investigations by the U.S. International Trade Commission

DEPARTMENT OF THE TREASURY

The appended notices relating to investigations by the U.S. International Trade Commission are published for the information of Customs officers and others concerned.

R. E. CHASEN,
Commissioner of Customs.

In the Matter of CERTAIN PRECISION RESISTOR CHIPS	Investigation No. 337-TA-63/65

Notice of Commission Request for Comments Concerning Settlement Agreement

BACKGROUND

In connection with the Commission's investigation, under section 337 of the Tariff Act of 1930, of alleged unfair methods of competition and unfair acts in the importation and sale of certain precision resistor chips in the United States, the administrative law judge (ALJ) recommended on February 22, 1980, that the Commission grant a joint motion to terminate this investigation with prejudice, filed by all of the parties on February 14, 1980. Copies of the ALJ's recommendation may be obtained by interested persons by contacting the Office of the Secretary to the Commission, 701 E Street NW., Washington, D.C. 20436; telephone 202-523-0161.

This investigation began with a complaint filed by Vishay Intertechnology, Inc., on December 15, 1978, alleging (1) misappropriation by respondents of certain proprietary technology, know-how, and trade secrets, and (2) incorporation by respondents of misappropriated proprietary technology, know-how, and trade secrets in the design

and manufacture of precision resistor chips. Investigation No. 337-TA-63 was instituted on January 12, 1979, based on Vishay's complaint. On March 30, 1979, SFERNICE and Resistor Research Corp. (RRC) filed a complaint against Vishay under section 337 based upon the exports to the United States of Vishay's Israeli subsidiary. Vishay was alleged to have monopolized and attempted to monopolize the precision resistor industry in the United States and alleged to have committed certain other unfair acts, including: (1) Utilizing section 337 proceedings to maintain a monopoly position; (2) knowingly asserting patents beyond the proper valid scope; (3) anticompetitive territorial restrictions in their licensing agreements; (4) unreasonably procuring and missusing a proprietary position; and (5) deceit in obtaining information by improper means. On April 25, 1979, the Commission instituted investigation No. 337-TA-65 based upon that complaint. In May 1979, investigation No. 337-TA-63 was consolidated by the presiding officer with investigation No. 337-TA-65.

On April 20, 1979, SFERNICE filed a complaint in Federal District Court for the Eastern District of Virginia asking for treble damages and injunctive relief based upon alleged violations of section 2 of the Sherman Antitrust Act, 15 U.S.C. 2 and of section 43(a) of the Lanham Act, 15 U.S.C. 1125(a). On May 18, 1979, Vishay filed a counterclaim in federal district court against SFERNICE and RRC alleging theft of its trade secrets. On November 6, 1979 a jury verdict was returned in the case of *SFERNICE* v. *Vishay Intertechnology* in the Eastern District of Virginia. The jury found a violation of section 2 of the Sherman Act and found that SFERNICE had suffered actual damages of 1.5 million dollars. The counterclaims in that case are still pending before that court.

WRITTEN COMMENTS REQUESTED

Because all parties have filed a joint motion to terminate this investigation based upon the settlement agreement and because the ALJ has recommended termination on the basis of the settlement agreement, no oral argument will be held with respect to the ALJ's recommendation. However, in light of the Commission's duty to consider the public interest, the Commission requests written comments from persons concerning the effect of the termination of this investigation based on the settlement agreement upon (1) the public health and welfare, (2) competitive conditions in the U.S. economy, (3) the production of like or directly competitive articles in the United States, and (4) U.S. consumers. These written comments must be filed with the Secretary to the Commission no later than 30 days after publication of this notice in the Federal Register. The text of the settlement agreement follows.

TEXT OF THE SETTLEMENT AGREEMENT

This settlement agreement and its appendices are entered into as of the 4th day of February, 1980, between Vishay Intertechnology, Inc. (Vishay), a company incorporated under the laws of the State of Delaware, and Societe Francaise de L'Electro-Resistance (SFERNICE), a company incorporated under the laws of France, and its subsidiary Resistor Research Corp. (RRC), a company incorporated under the laws of the State of Delaware. For convenience of reference, the term SFERNICE shall include both SFERNICE and RRC.

1. Vishay and SFERNICE agree to settle all outstanding disputes between them by using their best efforts and by immediately taking appropriate actions, including, but not limited to, prompt preparation, execution, and filing of stipulations.

2. This settlement agreement, the releases and royalty agreement shall take effect on the effective date, which shall be 5 business days after all of the following actions have occurred:

a. An order entered by the U.S. District Court for the Eastern District of Virginia, in civil action No. 79-338-A, vacating the verdict and judgment rendered thereon by the court on November 6, 1979, and dismissing the complaint with prejudice and without costs;

b. An order entered by the U.S. District Court for the Eastern District of Virginia, in civil action No. 79-338-A, dismissing the counterclaim with prejudice and without costs;

c. An order entered by the U.S. International Trade Commission terminating investigation No. 337-TA-63/65 with prejudice;

d. The filling by the parties involved of a praecipe marking the case brought by Vishay in the Court of Common Pleas, Chester County, Pa., and designated No. 189 equity settled, discontinued, and ended with prejudice. In connection therewith, there shall be executed by the parties involved in that litigation mutual general releases in favor of the opposing party and Vishay, its officers, directors, and legal representatives, for any conduct engaged in by them prior to the execution of this agreement. SFERNICE agrees to hold Vishay harmless for any claims that might be pursued against Vishay by the opposing party in that litigation for actions taken prior to the execution of this agreement.

e. A withdrawal of the following matters in various French courts and execution of documents in compliance with French law sufficient to terminate these actions with prejudice:

i. Vishay's complaint and SFERNICE's counterclaim in the Paris patent litigation;

ii. SFERNICE's complaint in a Paris court alleging false advertising by Vishay Micro-Mesures S.A and M. Jean Avril; and

iii. SFERNICE's complaint in a Nice court alleging misuse by Vishay of various goods, documents, and photographs obtained during Saisie-Countrefacons.

It is understood by Vishay and SFERNICE that completion of the foregoing actions will terminate all complaints and/or litigation currently pending anywhere in the world between Vishay and SFERNICE with each party bearing its own costs.

3. Vishay and SFERNICE each specifically agree to execute, concurrently with the signing of this agreement, the general release attached as appendices B and C. These releases shall take effect on the effective date.

4. Vishay and SFERNICE agree to refrain from lodging or pursuing a complaint or action of any nature with any court, governmental regulatory agency, or any other judicial, legislative, executive, or administrative body regarding any conduct or activity of either Vishay or SFERNICE, their officers, employees, directors, or other representatives prior to the signing of this agreement. Both parties also agree to withdraw any complaints, if any, which either has made (and which are pending) before any judicial, legislative, executive, or administrative body, and whether or not the same are included in paragraph 2 above. Both parties agree to use their best efforts to take appropriate actions, without expense, to terminate any such complaint or action pending before any judicial, legislative, executive, or administrative body.

5. On the effective date Vishay shall pay to SFERNICE 2 million U.S. dollars and issue to SFERNICE a note bearing interest at the rate of 3 percent per annum in the amount of 985,000 U.S. dollars. The issuance of this note satisfies, among other things, a judgment recently rendered by a French court in favor of SFERNICE in the amount of 339,112.94 francs. The note and accrued interest is to be paid by Vishay to SFERNICE in 1 year from the effective date. All payments under this paragraph shall be made payable to the order of RRC.

The foregoing payment and issuance of note made by Vishay as described above are in full settlement of counsel fees and other litigation expenses incurred by SFERNICE for those matters set forth in paragraph 2.

6. SFERNICE shall pay royalties to Vishay in accordance with the royalty agreement, attached hereto as appendix A, which shall be executed by Vishay and SFERNICE concurrently with the execution of this settlement agreement.

7. The parties hereby consent to the jurisdiction and power of the U.S. District Court for the Eastern District of Virginia to resolve all questions of whatever nature concerning the interpretation and performance of terms and conditions of this settlement agreement and its appendices, specifically including the jurisdiction and power to enforce the terms hereof.

8. This settlement agreement and its appendices cannot be changed orally but only by a writing signed by both Vishay and SFERNICE and approved by their respective boards of directors.

9. Each and every term of this settlement agreement and its appendices shall be binding upon Vishay and SFERNICE, their successors in interest, affiliates, subsidiaries, agents, employees, receivers, principals, assigns, beneficiaries, directors, officers, and attorneys.

10. Vishay and SFERNICE shall prepare a joint press release announcing the termination of all legal disputes between them and shall use their best efforts not to make any promotional use of this settlement other than by such joint press release. The term "promotional use" includes, but is not limited to, uses in publicity releases or press releases other than the joint press release mentioned above, public relations releases, advertisements, brochures, and contacts with customers or potential customers, suppliers, users, or potential users, but shall not include SEC filings, required public papers, and the like.

11. This settlement agreement and the appendices to it are the sole agreements among the parties and there are no other agreements, written or oral, express or implied, among these parties concerning the subject matter of this settlement agreement.

In witness whereof, we have caused this settlement agreement to be executed as of the 4th day of February, 1980.

Vishay Intertechnology, Inc.,
By: Felix Zandman,
President.

Societe Francaise de L'Electro-Resistance,
By: J. Claude Tine,
Chairman of the Board.

Resistor Research Corporation,
By: Paul R. F. Simon,
President.

Appendix A

Royalty Agreement

As part of the consideration of this settlement, SFERNICE shall pay to Vishay a royalty equal to 3 percent of worldwide net sales by SFERNICE (not including intercompany sales) and its affiliates, subsidiaries, and licensees of all fixed resistors using foil chips, foil chips for such resistors, and networks of such resistors manufactured by SFERNICE, its affiliates, subsidiaries, and licensees. Worldwide net sales is defined as SFERNICE's (and its affiliates, subsidiaries, and licensees) net sales before commissions, discounts, duties, and

transportation costs and less returns and allowances. Currently such resistors are identified under the trademark "NICROCER."

Such royalty payments are to be made for a 3-year period, with the first year to commence January 1, 1980, and to conclude December 31, 1980. Payments are to be made by SFERNICE with an annual basis within 90 days of December 31, 1980.

The annual payments are to be certified as accurate by SFERNICE's certified public accountants. After SFERNICE makes its final payment under the term of this agreement, an independent certified public accountant shall be chosen by Vishay, whose selection shall be agreeable to SFERNICE, for the sole purpose of certifying that the total payment made by SFERNICE under the terms of this royalty agreement is accurate.

This royalty agreement shall take effect upon the effective date of the settlement agreement to which it is attached as appendix A.

Appendix B

General Release

1. Societe Francaise de L'Electro-Resistance (as releasor) in consideration of the sum of $1, and other good and valuable consideration, the receipt and sufficiency of which is hereby acknowledged from Vishay Intertechnology, Inc. (the releasee), hereby releases, discharges and holds harmless the Releasee from all actions, causes of actions, suits, debts, dues, sums of money, accounts, reckonings, bonds, bills, covenants, contracts, controversies, executions, claims, and demands whatsoever, whether vested or unvested, liquidated or unliquidated, actual or contingent, known or unknown, in law or equity, which, against the releasee, the releasor (and its affiliates, subsidiaries and licensees) ever had, now has, or hereafter can, shall or may have for, upon, or by reason of any matter, cause or thing whatsoever which occurred in whole or in part from the beginning of time to the day of the date of this release, excepting only the obligations of the releasee contained in the settlement agreement to which this is attached as appendix B, and as are provided in paragraphs 2 and 4 below.

2. This release shall be construed to permit releasee and its affiliated parties to continue in the future to manufacture, use and sell foil resistors using all technology currently or previously used by them with respect to the manufacture, use and sale of said resistors. It is specifically understood and agreed, however, that this paragraph shall not in any way affect releasor's rights to assert against releasee U.S. Letters Patent 4,075,452 and/or any patent and/or any patent application which is a direct foreign counterpart of it, whether already

issued or hereafter issued, for acts of infringement occurring after the effective date.

3. In addition to the foregoing, but not by way of limitation on the construction thereof, releasor covenants never to sue releasee for patent infringement of U.S. Letters Patent 4,053,977, and/or any patent and/or any patent application which is a direct foreign counterpart of it, whether already issued or hereafter issued, regardless of whether the charged infringement occurred before or after the effective date.

4. Except as provided in paragraph 2, releasor may assert any patents not specifically named in paragraph 3 by reason of acts of infringement occurring after the effective date.

5. This release shall take effect upon the effective date of the settlement agreement to which this is attached.

Appendix C

General Release

1. Vishay Intertechnology, Inc. (as releasor), in consideration of the sum of $1, and other good and valuable consideration, the receipt and sufficiency of which is hereby acknowledged from Societe Francaise de L'Electro-Resistance (the releasee), hereby releases, discharges, and holds harmless the releasee from all actions, causes of actions, suits, debts, dues, sums of money, accounts, reckonings, bonds, bills, covenants, contracts, controversies, executions, claims, and demands whatsoever, whether vested or unvested, liquidated or unliquidated, actual or contingent, known or unknown, in law or equity, which, against the releasee, the releasor (and its affiliates, subsidiaries, and licensees) ever had, now has or hereafter can, shall or may have for, upon, or by reason of any matter, cause or thing whatsoever which occurred in whole or in part from the beginning of time to the day of the date of this release, excepting only the obligations of the releasee contained in the settlement agreement to which this is attached as appendix C.

2. This release shall be construed to permit releasee and its affiliated parties to continue in the future to manufacture, use and sell foil resistors using all technology currently or previously used by them with respect to the manufacture, use and sale of said resistors. It is specifically understood and agreed, however, that this paragraph shall not in any way affect releasor's rights to assert against releasee U.S. Letters Patent 3,405,381 and 3,517,436 for acts of infringement occurring after the effective date.

3. In addition to the foregoing, but not by way of limitation on the construction thereof, releasor covenants never to sue releasee for patent

infringement of U.S. Letters Patent 3,174,920, and/or any patent and/or any patent application which is a direct foreign counterpart of it, whether already issued or hereafter issued, regardless of whether the charged infringement occurred before or after the effective date.

4. Except as provided in paragraph 2, releasor may assert any patents not specifically named in paragraph 3 by reason or acts of infringement occurring after the effective date.

5. This release shall take effect upon the effective date of the settlement agreement to which this is attached.

ADDITIONAL INFORMATION

The original and 19 true copies of all written submissions must be filed with the Secretary of the Commission. Any person desiring to submit a document (or portion thereof) to the Commission in confidence must request in camera treatment. Such request should be directed to the Secretary of the Commission and must include a full statement of the reasons why the Commission should grant such treatment. The Commission will either accept such submission in confidence or return it. All nonconfidential written submissions will be open to public inspection at the Secretary's office.

By order of the Commission.

Issued: March 10, 1980.

KENNETH R. MASON,
Secretary.

In the Matter of CERTAIN ANAEROBIC IMPREGNATING COMPOSITIONS AND COMPONENTS THEREFOR	Investigation No. 337-TA-71

Order to Certify Motion to Commission

The presiding officer in the above-captioned investigation is hereby ordered to certify motion No. 71-30 to the Commission along with her recommendation regarding disposition of the motion.

The Secretary will transmit a copy of this order to the presiding officer and serve copies on each party of record to the investigation.

By order of the Commission.

Issued: March 11, 1980.

KENNETH R. MASON,
Secretary.

731-TA-17 (Preliminary)

Clams in Airtight Containers From Canada

Notice of Institution of Preliminary Antidumping Investigation and Scheduling of Conference

Investigation instituted.—Following receipt of advice from the Department of Commerce on March 5, 1980, the U.S. International Trade Commission on March 10, 1980, instituted a preliminary antidumping investigation under section 733(a) of the Tariff Act of 1930 to determine whether there is a reasonable indication that an industry in the United States is materially injured, or is threatened with material injury, or the establishment of an industry in the United States is materially retarded, by reason of imports from Canada of clams in airtight containers provided for in items 114.01 and 114.05 of the Tariff Schedules of the United States, allegedly sold or likely to be sold at less than fair value. This investigation will be subject to the provisions of part 207 of the Commission's Rules of Practice and Procedure (19 CFR 207, 44 F.R. 76457) and particularly, subpart B thereof, effective January 1, 1980.

Written submissions.—Any person may submit to the Commission on or before April 3, 1980, a written statement of information pertinent to the subject matter of the investigation. A signed original and 19 copies of such statements must be submitted.

Any business information which a submitter desires the Commission to treat as confidential shall be submitted separately and each sheet must be clearly marked at the top "Confidential business data." Confidential submissions must conform with the requirements of section 201.6 of the Commission's Rules of Practice and Procedure (19 CFR 201.6). All the written submissions, except for confidential business data, will be available for public inspection.

Conference.—The Director of Operations of the Commission has scheduled a conference in connection with the investigation for 10 a.m., e.s.t., on March 31, 1980, at the U.S. International Trade Commission Building, 701 E Street NW., Washington, D.C. Parties wishing to participate in the conference should contact the senior supervisory investigator for the investigation, Ms. Vera Libeau, 202-523-0368. It is anticipated that parties in support of the petition for antidumping duties and parties opposed to such petition will each be collectively allocated 1 hour within which to make an oral presentation at the conference. Further details concerning the conduct of the conference will be provided by the senior supervisory investigator.

Inspection of petition.—The petition filed in this case in available for

public inspection at the Office of the Secretary, U.S. International Trade Commission, and at the New York City office of the U.S. International Trade Commission located at 6 World Trade Center.

Issued: March 10, 1980.

KENNETH R. MASON,
Secretary.

Notice of Review of Certain Countervailing Duty Orders

Section 104(b) of the Trade Agreements Act of 1979 in pertinent part provides:

(b) OTHER COUNTERVAILING DUTY ORDERS.—

(1) REVIEW BY COMMISSION UPON REQUEST.—In the case of a countervailing duty order issued under section 303 of the Tariff Act of 1930 (19 U.S.C. 1303)—

(A) which is not a countervailing duty order to which subsection (a) applies,

(B) which applies to merchandise which is the product of a country under the Agreement, and

(C) which is in effect on January 1, 1980, or which is issued pursuant to court order in an action brought under section 516(d) of that Act before that date,

the Commission, upon the request of the government of such a country or of exporters accounting for a significant proportion of exports to the United States of merchandise which is covered by the order, submitted within 3 years after the effective date of title VII of the Tariff Act of 1930 shall make a determination under paragraph (2) of this subsection.

(2) DETERMINATION BY THE COMMISSION.—In a case described in paragraph (1) with respect to which it has received a request for review, the Commission shall commence an investigation to determine whether—

(A) an industry in the United States—

(i) would be materially injured, or

(ii) would be threatened with material injury, or

(B) the establishment of an industry in the United States would be materially retarded,

by reason of imports of the merchandise covered by the countervailing duty if the order were to be revoked.

It is the intention of the Commission to establish a schedule on or about April 30, 1980, for the conduct of investigations pursuant to section 104(b) encompassing requests for such investigations that have been received by March 28, 1980. In accordance with section 207.31 of the Commission's Rules of —

(a) the trade interests of the United States;
(b) the length of time a countervailing duty order has been in effect (longest first);
(c) the volume of trade of the product in question; and

(d) the appropriateness of consolidation of investigations relating to like products.

Additional investigations, requests for which are received after March 28, 1980, and before December 31, 1982, will be scheduled at later dates.

By order of the Commission.

Issued: March 7, 1980.

KENNETH R. MASON,
Secretary.

Index

U.S. Customs Service

Treasury decisions: T.D. No.

Bonds: Approval and discontinuance of carrier bonds, Customs Form 3587 80–86

Customs Regulations amended, section 146.48(c) relating to processing costs incurred and profit realized in foreign-trade zones 80–87

Foreign currencies:

Daily certified rates; March 3–7, 1980 80–90

Rates which varied from quarterly rate; week of March 3–7, 1980 80–91

Tariff classification of tire protection chains—Change of practice 80–89

Withholding delivery and redelivery of merchandise for country-of-origin marking, section 134.3, Customs Regulations amended 80–88

U.S. Court of Customs and Patent Appeals: C.A.D. No.

Hawaiian Motor Co. v. United States, No. 79–27 1241

The United States v. Endicott Johnson Corporation, No. 79–19 1219

Customs Court

Administrative:

Action: review, standard of, C.D.R. 80–2

Agency's findings; basic findings v. ultimate findings, C.R.D. 80–2

Determination; judicial review, C.R.D. 80–2

Law:

Judicial review:

Record, C.R.D. 80–2

Specificity of administrative determination, C.R.D. 80–2

Stay of proceedings, C.R.D. 80–2

American manufacturer's action; negative injury determination, review of, C.R.D. 80–2

Antidumping Act of 1921:

Industry in the United States, C.R.D. 80–2

Injury, interpretation of term, C.R.D. 80–2

Appeal to U.S. Court of Customs and Patent Appeals (p. —);

Appeal 80–20—American manufacturer's action; hand tools from Japan; negative injury determination; LTFV; Antidumping Act; summary judgment

Articles of gold; Staffa stamps, C.D. 4846

Basic:

Facts v. underlying facts; findings of fact, C.R.D. 80–2

Findings v. ultimate findings; administrative agency's findings, C.R.D. 80–2

Common meaning; postage stamps, C.D. 4846

Construction:

Administrative Procedure Act, C.R.D. 80–2
Antidumping Act of 1921:
(19 U.S.C. 160, *et seq.*), C.R.D. 80–2
Sec. 201(d), C.R.D. 80–2
1958 amendments, C.R.D. 80–2
Post Office Act of 1969 (United Kingdom):
Sec. 7, C.D. 4846
Sec. 23, C.D. 4846
Sec. 123, C.D. 4846
Public Law 85–63, sec. 1(3), 72 Stat. 583(1958), C.R.D. 80–2
Tariff Act of 1913, C.D. 4846
Tariff Act of 1930:
Par. 1409, C.D. 4846
Par. 1410, C.D. 4846
Tariff Schedules of the United States:
Item 274.40, C.D. 4846
Item 274.45, C.D. 4846
Items 274.50–274.70, C.D. 4846
Item 274.70 C.D. 4846
Item 274.90, C.D. 4846
Item 644.52, C.D. 4846
Item 656.10, C.D. 4846
Item 790.55, C.D. 4846
Tariff Schedules of the United States:
Schedule 2:
Part 4, C.D. 4846
Part 5:
Headnote 1, C.D. 4846
Headnote 2(d), C.D. 4846
Schedule 7, part 13, subpart A, C.D. 4846
Trade Act of 1974, sec. 171(a), C.R.D. 80–2
Trade Agreements Act of 1979, C.R.D. 80–2
U.S. Code:
Title 5, sec. 557(c), C.R.D. 80–2
Title 19:
Sec. 160(a), C.R.D. 80–2
Sec. 160(c), C.R.D. 80–2
Sec. 2231(a), C.R.D 80–2
Cross-motions for summary judgment, C.R.D. 80–2
Definition:
Bogus items, C.D. 4846
Essentially of, C.D. 4846
Flat, C.D. 4846
Gold leaf, C.D. 4846
Metal leaf, C.D. 4846
Postage stamp, C.D. 4846
Pressure sensitive, C.D. 4846
Printing, C.D. 4846
Printing process, C.D. 4846
Embossed v. printed, C.D. 4846
Evidence; exhibits, C.D. 4846
Exhibits; evidence, C.D. 4846
Findings of fact; basic facts v. underlying facts, C.R.D. 80–2

Gold:
Articles of, C.D. 4846
Leaf, mounted, C.D. 4846
Industry, in the United States; Antidumping Act of 1921, C.R.D. 80–2
Injury, interpretation of term; Antidumping Act of 1921, C.R.D. 80–2
International Trade Commission:
Negative injury determination, C.R.D. 80–2
Negative injury determination; judicial review, C.R.D. 80–2
Judicial review:
Administrative determination, C.R.D. 80–2
Record; administrative law, C.R.D. 80–2
International Trade Commission negative injury determination, C.R.D. 80–2
Specificity of administrative determination; administrative law, C.R.D. 80–2
Legislative history:
Brussels Nomenclature, 1955, heading 49.11, C.D. 4846
Explanatory Notes to the Brussels Nomenclature (1955), vol. II:
Heading 48.05, C.D. 4846
Heading 49.11, C.D. 4846
House Report No. 96–317, 96th Cong., 1st Sess. (1979), p. 46, C.R.D. 80–2
Senate Report No. 93–1298, 93rd Cong., 2nd Sess. (1974), pp. 121, 171, 178–180, C.R.D. 80–2
Summaries of Trade and Tariff Information (TSUS):
1968, schedule 6, vol. 5, p. 135, C.D. 4846
1970, schedule 2, vol. 5, p. 85, C.D. 4846
Tariff Classification Study, 1960, Submitting Report, p. 8, C.D. 4846
U.S. Code Congressional & Administrative News, 1974, vol. 4, p. 7186, *et seq.*, C.R.D. 80–2
Lexicographic sources:
The American Heritage Dictionary of the English Language (1969), C.D. 4846
Black's Law Dictionary (1968), C.D. 4846
Funk & Wagnalls New Standard Dictionary of the English Language (1933), C.D. 4846
McGraw-Hill Encyclopedia of Science and Technology, vol. 10, pp. 175–6, C.D. 4846
The Musson Stamp Dictionary (1972), C.D. 4846
Webster's New World Dictionary of the American Language (1960), C.D. 4846
Webster's Third New International Dictionary (1966), C.D. 4846
Negative:
Finding; Secretary of the Treasury, C.R.D. 80–2
Injury determination:
International Trade Commission, C.R.D. 80–2
Review of; American manufacturer's action, C.R.D. 80–2
Philatelic meaning; postage stamps, C.D. 4846
Photographic film; printed matter * * * produced by any printing process, C.D. 4846
Portable electric typewriters; sales at not less than fair value, C.R.D. 80–2
Postage stamps:
Common meaning, C.D. 4846
Philatelic meaning, C.D. 4846
Practice and procedure; stay of proceedings, C.R.D. 80–2
Printed:
Matter, C.D. 4846

Matter * * * produced by any printing process; photographic film, C.D. 4846
V. embossed, C.D. 4846
Proceedings, stay of, C.R.D. 80–2
Review, standard of; administrative action, C.R.D. 80–2
Sales at not less than fair value; portable electric typewriters, C.R.D. 80–2
Secretary of the Treasury; negative finding, C.R.D. 80–2
Staffa stamps; articles of gold, C.D. 4846
Stamps, postage, C.D. 4846
Stay of proceedings:
Administrative law, C.R.D. 80–2
Practice and procedure, C.R.D. 80–2
Strips, gold, C.D. 4846
Summary judgment, cross-motions for, C.R.D. 80–2
Treatises and related publications:
Annual Report of the Secretary of the Treasury on the State of the Finances for the Fiscal Year Ended June 30, 1975, p. 358 C.R.D. 80–2
Davis, *Administrative Law*, vol. 2, sec. 16.06, C.R.D. 80–2
Georgia Journal of International and Comparative Law, vol. 9 (1979), pp. 177, 205, C.R.D. 80–2
Herzstein, *The Role of Law and Lawyers Under the New Multilateral Trade Agreement*, C.R.D. 80–2
Rosen, *Catalogue of British Local Stamps*, C.D. 4846
Scott's 1978 Standard Postage Stamp Catalogue, vol. 1, C.D. 4846
Scott's United States Stamp Catalogue Specialized (1976). C.D. 4846
The Stamp Collector's Handbook, C.D. 4846
Strauss, *The Printing Industry* (1967), p. 12, C.D. 4846
Suchman, *The U.S. Antidumping Law; After the Trade Reform Act* (1975), C.R.D. 80–2
Williams, L. N., *The Cinderella Philatelist*, April 1975, p. 31, C.D. 4846
Williams, L. N., *Cinderella Stamps*, p. 99, C.D. 4846
Typewriters, portable electric, C.R.D. 80–2
Words and phrases:
Bogus items, C.D. 4846
Essentially of, C.D. 4846
Flat, C.D. 4846
Gold leaf, C.D. 4846
Industry, C.R.D. 80–2
Injury, C.R.D. 89–2
Metal leaf, C.D. 4846
Postage stamp, C.D. 4846
Pressure sensitive, C.D. 4846
Printing, C.D. 4846
Printing process, C.D. 4846

APR 1 0 1980 315-596 Item 950-D T1.11/3:14/15
Copies 350 (contin)

Customs Bulletin

Regulations, Rulings, Decisions, and Notices concerning Customs and related matters

and Decisions

of the United States Court of Customs and Patent Appeals and the United States Customs Court $1.30

Vol. 14 | APRIL 9, 1980 | No. 15

9247

This issue contains

T.D. 80–92 through 80–96
General Notice
C.D. 4847
Reap. abstracts R80/36 through R80/47
International Trade Commission Notice

THE DEPARTMENT OF THE TREASURY
U.S. Customs Service

NOTICE

The abstracts, rulings, and notices which are issued weekly by the U.S. Customs Service are subject to correction for typographical or other printing errors. Users may notify the U.S. Customs Service, Logistics Management Division, Washington, D.C. 20229, of any such errors in order that corrections may be made before the bound volumes are published.

For sale by the Superintendent of Documents, U.S. Government Printing Office, Washington, D.C. 20402. Price: $1.30 (single copy domestic); $1.65 (single copy foreign). Subscription price: $65.00 a year domestic; $81.25 a year foreign.

U.S. Customs Service

Treasury Decisions

(T.D. 80–92)

Corporate Name Change of a Customs Approved Public Gager

Notice is hereby given pursuant to the provisions of section 151.43 of the Customs Regulations (19 CFR 151.43) that Superintendence Co., Inc., approved to gage petroleum and petroleum products in all Customs districts (see T.D. 73–8) has changed its corporate name to SGS Control Services, Inc.

Dated: March 20, 1980.

ALFRED G. SCHOLLE,
Acting Director, Office of Regulations and Rulings.

[Published in the Federal Register, Mar. 27, 1980 (45 F.R. 20272)]

(T.D. 80–93)

Customhouse Broker License—Cancellation

Cancellation without prejudice of customhouse broker license 4825

Notice is hereby given that the Commissioner of Customs, on March 19, 1980, pursuant to section 641, Tariff Act of 1930, as amended (19 CFR 111.51(b)), upon the specific request of Thomas P. Cline, Miami, Fla., canceled without prejudice individual customhouse broker's license No. 4825 issued to him on September 13, 1973, for the Customs District of Miami, Fla. The Commissioner's decision is effective as of March 19, 1980.

Dated: March 19, 1980.

WILLIAM T. ARCHEY,
Acting Commissioner of Customs.

[Published in the Federal Register, Mar. 27, 1980 (45 F.R. 20272)]

(T.D. 80–94)

Synopses of Drawback Decisions

The following are synopses of drawback rates and amendments issued August 18, 1978, to March 13, 1980, inclusive, pursuant to sections 22.1 and 22.5, inclusive, Customs Regulations.

In the synopses below are listed for each drawback rate or amendment approved under section 1313(a) and (b), the name of the company, the specified articles on which drawback is authorized, the merchandise which will be used to manufacture or produce these articles, the factories where the work will be accomplished, the date the statement was signed, the basis for determining payment, the Regional Commissioner to whom the rate was forwarded or issued by, and the date on which it was forwarded or issued.

Dated: March 24, 1980.

ALFRED G. SCHOLLE,
Director, Carriers, Drawback and Bonds Division.

(A) Company: American Hoist & Derrick Co.
Section 1313(a) articles: Cranes.
Section 1313(a) merchandise: Hydraulic motors, hydraulic valves, and crane truck carriers.
Section 1313(b) articles: Construction equipment, cranes, crawler, truck, rail, pedestal, barge, stiffleg derrick, draglines, gin poles, back hoes, scrap grabbing cranes, magnetic cranes, log loader, compactors, stabilizers, trenchers, and cable hoists.
Section 1313(b) merchandise: Carbody castings, steel plate, and ball, roller, tapered and Rotek triple path roller bearings.
Factories: Bay City, Miss.; St. Paul, Duluth, and Minneapolis, Minn.; Cleveland, Ohio; Fort Wayne, Ind.
Statement signed: April 27, 1979.
Basis of claim: Used in as to operations under section 1313(a); Used in less valuable waste as to carbodies; Appearing in as to steel; and used in as to bearings—under section 1313(b).
Rate forwarded to Regional Commissioner of Customs: New York, June 26, 1979.

(B) Company: American NTN Bearing Manufacturing Corp.
Section 1313(a) articles: Finished steel ball bearings and manufactured parts.
Section 1313(a) merchandise: Steel ball bearing parts; bearing seals of plastic or rubber.

Section 1313(b) articles: Finished steel ball bearings and manufactured parts.
Section 1313(b) merchandise: Steel ball bearing parts; bearing seals of plastic or rubber.
Factory: Schiller Park, Ill.
Statement signed: July 12, 1979.
Basis of claim: Appearing in.
Rate forwarded to Regional Commissioner of Customs: New York, September 4, 1979.

(C) Company: Berry Citrus Products, Inc.
Section 1313(a) articles: Frozen concentrated orange juice that meets customer specifications.
Section 1313(a) merchandise: Concentrated orange juice for manufacturing.
Section 1313(b) articles: Frozen concentrated orange juice that meets customer specifications.
Section 1313(b) merchandise: Concentrated orange juice for manufacturing.
Factory: La Belle, Fla.
Statement signed: August 16, 1979.
Basis of claim: Used in.
Rate forwarded to Regional Commissioner of Customs: Miami, August 30, 1979.

(D) Company: Dataproducts Corp.
Section 1313(a) articles: Line printers and lower level subassemblies.
Section 1313(a) merchandise: Various parts of printers and subassemblies.
Section 1313(b) articles: Line printers and lower level subassemblies.
Section 1313(b) merchandise: Various parts of printers and subassemblies.
Factory: Woodland Hills, Calif.
Statement signed: September 20, 1979.
Basis of claim: Used in.
Rate forwarded to Regional Commissioner of Customs: Los Angeles, October 15, 1979.

(E) Company: Eastman Kodak Co.
Section 1313(a) articles: Cameras and other photographic equipment.
Section 1313(a) Merchandise: Screws.
Section 1313(b) articles: Cameras, projectors, flash attachments, microfilming equipment, and other photographic equipment and accessories.
Section 1313(b) merchandise: Various electronic and mechanical

components consisting of capacitors, resistors, inductors, motors, transformers, lenses, and screws.
Factories: Rochester, N.Y. (3).
Statement signed: August 23, 1979.
Basis of claim: Appearing in.
Rate forwarded to Regional Commissioner of Customs: Boston, October 3, 1979.

(F) Company: General Electric Co.
Section 1313(a) articles: Steam turbines and parts thereof.
Section 1313(a) merchandise: Turbine castings, rotor forgings and bearings.
Section 1313(b) articles: Steam turbines and parts thereof.
Section 1313(b) merchandise: Turbine castings and rotor forgings.
Factories: Fitchburg, Mass.; Bangor, Maine.
Statement signed: February 21, 1979.
Basis of claim: Used in, less valuable waste.
Rate forwarded to Regional Commissioner of Customs: New York, May 4, 1979.

(G) Company: Harmon Colors Corp.
Section 1313(a) articles: Color pigments, lakes, toners, and reduced colors.
Section 1313(a) merchandise: Dyestuff and dyestuff intermediates.
Section 1313(b) articles: Color pigments, lakes, toners, and reduced colors.
Section 1313(b) merchandise: Dyestuff and dyestuff intermediates.
Factory: Haledon, N.J.
Statement signed: November 27, 1978.
Basis of claim: Used in.
Rate forwarded to Regional Commissioner of Customs: New York, February 23, 1979.
Revokes: T.D. 73-88-F, as amended by T.D. 77-244-D; and T.D. 54882-B, as amended by T.D. 55057-C and T.D. 77-244-D.

(H) Company: Jeep Corp.
Section 1313(a) articles: Jeep vehicles, among other things.
Section 1313(a) merchandise: Imported motor vehicle frames and tires, among other things.
Section 1313(b) articles: Passenger automobiles, trucks, and parts thereof.
Section 1313(b) merchandise: Hot and cold rolled steel sheets, galvanized steel sheets, and steel forgings.
Factory: Toledo, Ohio.

Statement signed: November 14, 1978.
Basis of claim: Appearing in.
Amendment issued by Regional Commissioner of Customs: Chicago, December 21, 1978.
Amends: T.D. 55423–A, as amended, to cover additional process under section 1313(a) above.

(I) Company: Jones & Laughlin Steel Corp. (Youngstown Sheet & Tube Co.).
Section 1313(a) articles: Carbon steel plates, hot-rolled coils and sheets, cold-rolled coils and sheets, galvanized coils and sheets, tin plate coils and sheets, tubular products, junior beams, hot- and cold-rolled bars, rods, wire products, and structural channels.
Section 1313(a) merchandise: Carbon steel ingots and slabs.
Section 1313(b) articles: Carbon steel plates, hot-rolled coils and sheets, cold-rolled coils and sheets, galvanized coils and sheets, tin plate coils and sheets, tubular products, junior beams, hot- and cold-rolled bars, rods, wire products, and structural channels.
Section 1313(b) merchandise: Carbon steel ingots and slabs.
Factories: Cleveland and Youngstown, Ohio; Aliquippa and Pittsburgh, Pa.; East Chicago, Ind.; Hennepin, Ill.
Statement signed: April 10, 1979.
Basis of claim: Appearing in.
Rate forwarded to Regional Commissioners of Customs: New York and Baltimore, May 1, 1979.
Revokes: T.D. 76–328–E.

(J) Company: Libbey-Owens-Ford Co.
Section 1313(a) articles: Ground view windows for airplanes.
Section 1313(a) merchandise: Imported airplane parts (frame castings and guarding profiles for airplane windows).
Section 1313(b) articles: Plate glass sheets, polished on one side; polished plate glass stock sheets; plate glass articles cut to specified sizes for windows, show cases, mirrors, and similar articles, among other things.
Section 1313(b) merchandise: Ground plate glass, ground plate glass stock sheets, polished on one side only, ground and polished plate glass stock sheets, among other things.
Factories: Charleston, W. Va.; Shreveport, La.; East Toledo and Rossford, Ohio; Ottawa, Ill.; Brackenridge, Pa.
Statement signed: July 28, 1978.
Basis of claim: Appearing in.
Amendment issued by Regional Commissioner of Customs: Chicago, August 18, 1978.

Amends: T.D. 54832–K, as amended, to cover a change in name from Libbey-Owens-Ford Glass Co.

(K) Company: Liggett Group Inc.
Section 1313(a) articles: Cigarettes, blended tobaccos, and cut and blended tobaccos.
Section 1313(a) merchandise: Unstemmed cigarette leaf tobacco, oriental or Turkish type tobacco.
Section 1313(b) articles: Cigarettes, blended tobacco, and blended and cut tobaccos.
Section 1313(b) merchandise: Flue-cured scrap tobacco and burley scrap tobacco.
Factory: Durham, N.C.
Statement signed: October 8, 1979.
Basis of claim: Appearing in.
Rate forwarded to Regional Commissioner of Customs: Miami, December 5, 1979.
Revokes: T.D. 45088–D, as amended by 55765–E, 56334–S, 69–240–H, 73–323–D, and 78–276–H.

(L) Company: Massey-Ferguson, Inc.
Section 1313(a) articles: Agricultural and industrial equipment.
Section 1313(a) merchandise: Engines, winches, and other various parts.
Section 1313(b) articles: Agricultural and industrial equipment.
Section 1313(b) merchandise: Hot-rolled steel plate and other various parts.
Factories: Des Moines, Iowa; Detroit, Mich.; Cuyahoga Falls, Ohio.
Statement signed: July 6, 1979.
Basis of claim: Appearing in.
Rate forwarded to Regional Commissioner of Customs: New York, January 17, 1980.

(M) Company: Meiwa, U.S.A., Inc.
Section 1313(a) articles: Unfinished polyvinyl products.
Section 1313(a) merchandise: Polyvinyl chloride film.
Section 1313(b) articles: Unfinished polyvinyl products.
Section 1313(b) merchandise: Polyvinyl chloride dispersion resin.
Factory: Charlotte, N.C.
Statement signed: December 29, 1978.
Basis of claim: Used in, less valuable waste.
Rate forwarded to Regional Commissioner of Customs: Miami, June 20, 1979.

(N) Company: Micro Design Division of Bell & Howell Co.
Section 1313(a) articles: Microfilm readers and reader printers.

Section 1313(a) merchandise: Microfilm projection lenses, condensor lenses, prisms, lamps.
Section 1313(b) articles: Microfilm readers and reader printers.
Section 1313(b) merchandise: Microfilm projection lenses, condensor lenses, prisms, lamps.
Factory: Hartford, Wis.
Statement signed: January 2, 1980.
Basis of claim: Appearing in.
Rate forwarded to Regional Commissioner of Customs: Chicago, February 22, 1980.
Revokes: T.D. 79–155–Q.

(O) Company: Republic Powdered Metals.
Section 1313(a) articles: Asphalt base aluminum roof coatings, aluminum paints, and similar protective coatings containing aluminum paste.
Section 1313(a) merchandise: Aluminum paste, coarse.
Section 1313(b) articles: Asphalt base aluminum roof coatings, aluminum paints, and similar protective coatings containing aluminum paste.
Section 1313(b) merchandise: Aluminum paste, coarse.
Factories: Medina, Ohio; Gilroy, Calif.
Statement signed: December 14, 1978.
Basis of claim: Used in.
Rate forwarded to Regional Commissioner of Customs: San Francisco, March 29, 1979.
Revokes: T.D. 78–184–T.

(P) Company: R. J. Reynolds Tobacco Co.
Section 1313(a) articles: Cigarettes and blended cigarette tobaccos.
Section 1313(a) merchandise: Oriental tobacco.
Section 1313(b) articles: Cigarettes and blended cigarette tobaccos.
Section 1313(b) merchandise: Flue cured scrap tobacco and burley scrap tobacco.
Factory: Winston-Salem, N.C.
Statement signed: December 3, 1979.
Basis of claim: Used in.
Rate forwarded to Regional Commissioner of Customs: Miami, January 11, 1980.

(Q) Company: Rhone-Poulenc Inc.
Section 1313(a) articles: 2-methyl-4-nitro imidazole.
Section 1313(a) merchandise: Methyl imidazole.
Section 1313(b) articles: Dimetronidazole.

315-596 O - 80 - 2

Section 1313(b) merchandise: 2-methyl-4-nitro imidazole.
Factory: New Brunswick, N.J.
Statement signed: January 12, 1979.
Basis of claim: Used in.
Rate forwarded to Regional Commissioner of Customs: New York, April 6, 1979.

(R) Company: Sandvik, Inc.
Section 1313(a) articles: Coated welding electrodes.
Section 1313(a) merchandise: Stainless steel core wire, round wire, welding wire.
Section 1313(b) articles: Coated welding electrodes.
Section 1313(b) merchandise: Stainless steel core wire, round wire, welding wire.
Factory: Waverly, Pa.
Statement signed: November 10, 1978.
Basis of claim: Appearing in.
Rate forwarded to Regional Commissioner of Customs: New York, February 16, 1979.

(S) Company: Shakespeare Co., Monofilament Division.
Section 1313(a) articles: Nylon 6/6 monofilament sewing thread.
Section 1313(a) merchandise: Nylon pellets.
Section 1313(b) articles: Nylon 6/6 monofilament sewing thread.
Section 1313(b) merchandise: Nylon pellets.
Factory: Columbia, S.C.
Statement signed: June 6, 1979.
Basis of claim: Appearing in.
Rate forwarded to Regional Commissioners of Customs: New York, Boston, Baltimore, and Miami, August 14, 1979.

(T) Company: Teledyne Firth Sterling Division, Teledyne Industries Inc.
Section 1313(a) articles: Steel products, among other things.
Section 1313(a) merchandise: Ferrotungsten, among other things.
Section 1313(b) articles: Steel products, among other things.
Section 1313(b) merchandise: Ferrotungsten, among other things.
Factories: McKeesport and Trafford, Pa.
Statement signed: May 11, 1979.
Basis of claim: Appearing in.
Amendment issued by Regional Commissioner of Customs: New York, July 18, 1979.
Amends: T.D. 47949–T, as amended, to cover successorship from Firth-Sterling Corp.

(U) Company: Tennant Co.
Section 1313(a) articles: Sweepers, scrubbers, and brush assemblies.
Section 1313(a) merchandise: Ford engines, Perkins engines, double seal ball bearing, nylon filament.
Section 1313(b) articles: Sweepers, scrubbers, and other various articles.
Section 1313(b) merchandise: Hot-rolled steel sheet and plate, cold-rolled steel sheet, stainless steel sheet, nylon filament, ball bearings.
Factories: Minneapolis and Osseo, Minn.
Statement signed: April 18, 1979.
Basis of claim: Appearing in.
Rate forwarded to Regional Commissioner of Customs: Chicago, August 30, 1979.

(V) Company: Texaco Inc.
Section 1313(a) articles: TLA–230, a calcium sulfonate surface active agent.
Section 1313(a) merchandise: Calcium sulfonate.
Section 1313(b) articles: Various lubricants and oil additives.
Section 1313(b) Merchandise: TLA–230, a calcium sulfonate surface active agent.
Factory: Port Arthur, Tex.
Statement signed: February 2, 1979.
Basis of claim: Appearing in.
Rate forwarded to Regional Commissioner of Customs: Houston, February 22, 1980.
Revokes: T.D. 70–189–D and T.D. 75–277–L.

(W) Company: Thomas International Corp.
Section 1313(a) articles: Electronic organs.
Section 1313(a) merchandise: Various components.
Section 1313(b) articles: Electronic organs.
Section 1313(b) merchandise: Various components.
Factory: Sepulveda, Calif.
Statement signed: June 4, 1979.
Basis of claim: Appearing in.
Rate forwarded to Regional Commissioner of Customs: Los Angeles, January 9, 1980.

(X) Company: Waltham Watch Co.
Section 1313(a) articles: Various watches and watch heads.
Section 1313(a) merchandise: Various watch movements, cases, heads, and bracelets.
Section 1313(b) articles: Various watches and watch heads.

Section 1313(b) merchandise: Various watch movements, cases, heads, and bracelets.
Factories: Chicago, Ill.; Bridgeport, Conn.
Statement signed: July 5, 1978.
Basis of claim: Appearing in.
Rate forwarded to Regional Commissioners of Customs: Chicago, New York, and Boston, March 13, 1980.
Revokes: T.D. 55378–M as amended by T.D. 70–189–F and T.D. 73–26–D.

(Y) Company: A. Wimpfheimer & Brother, Inc.
Section 1313(a) articles: Velvet cloth.
Section 1313(a) merchandise: Rayon yarn.
Section 1313(b) articles: Velvet cloth.
Section 1313(b) merchandise: Rayon yarn.
Factory: Stonington, Conn.
Statement signed: April 30, 1979.
Basis of claim: Appearing in.
Rate forwarded to Regional Commissioner of Customs: Boston, May 30, 1979.

(Z) Company: Xerox Corp.
Section 1313(a) articles: Reprographic machine and peripheral equipment and related tools, parts and assemblies thereof; components and reprographic supplies.
Section 1313(a) merchandise: Castings, tools, blanks, parts, assemblies, subunits, accessories and supplies.
Section 1313(b) articles: Reprographic machine and peripheral equipment and related tools, parts and assemblies thereof, components and reprographic supplies.
Section 1313(b) merchandise: Castings, tools, blanks, parts, assemblies, subunits, accessories and supplies.
Factories: Various factories as listed in manufacturer's statement.
Statement signed: February 8, 1980.
Basis of claim: Appearing in.
Rate forwarded to Regional Commissioner of Customs: Boston, March 11, 1980.

(T.D. 80-95)

Foreign Currencies—Daily Rates for Countries Not on Quarterly List

Rates of exchange based on rates certified to the Secretary of the Treasury by the Federal Reserve Bank of New York for the Brazil cruzeiro, People's Republic of China yuan, Hong Kong dollar, Iran rial, Philippines peso, Singapore dollar, Thailand baht (tical), and Venezuela bolivar

The Federal Reserve Bank of New York, pursuant to section 522(c), Tariff Act of 1930, as amended (31 U.S.C. 372(c)), has certified buying rates for the dates and foreign currencies shown below. The rates of exchange, based on these buying rates, are published for the information and use of Customs officers and others concerned pursuant to part 159, subpart C, Customs Regulations (19 CFR 159, subpart C).

Brazil cruzeiro:	
March 10–14, 1980	$0.0214
People's Republic of China yuan:	
March 10, 1980	$0.652869
March 11–13, 1980	.650280
March 14, 1980	.646998
Hong Kong dollar:	
March 10, 1980	$0.201309
March 11, 1980	.200844
March 12, 1980	.200421
March 13, 1980	.200080
March 14, 1980	.199601
Iran rial:	
March 10–14, 1680	Not available
Philippines peso:	
March 10–14, 1980	$0.1350
Singapore dollar:	
March 10, 1980	$0.458295
March 11, 1980	.455270
March 12, 1980	.455996
March 13, 1980	.454442
March 14, 1980	.453001
Thailand Baht (tical):	
March 10–14, 1980	$0.0489
Venezuela bolivar:	
March 10–14, 1980	$0.2329

(LIQ-3-TRODE)

Dated: March 26, 1980.

G. Scott Shreve
(For Chester R. Krayton,
Director, Duty Assessment Division).

(T.D. 80–96)

Foreign Currencies—Variances From Quarterly Rate

Rates of exchange based upon rates certified to the Secretary of the Treasury by the Federal Reserve Bank of New York

The following rates of exchange are based upon rates certified to the Secretary of the Treasury by the Federal Reserve Bank of New York, pursuant to section 522(c), Tariff Act of 1930, as amended (31 U.S.C. 372(c)), and reflect variances of 5 per centum or more from the quarterly rate published in T.D. 80–28 for the following countries. Therefore, as to entries covering merchandise exported on the dates listed, whenever it is necessary for Customs purposes to convert such currency into currency of the United States, conversion shall be at the following rates:

Austria schilling:	
March 13, 1980	$0. 076702
March 14, 1980	. 076249
Belgium franc:	
March 10, 1980	$0. 034002
March 11, 1980	. 033990
March 12, 1980	. 034048
March 13, 1980	. 033807
March 14, 1980	. 033490
Denmark krone:	
March 10, 1980	$0. 176929
March 11, 1980	. 176741
March 12, 1980	. 177179
March 13, 1980	. 175762
March 14, 1980	. 174672
France franc:	
March 10, 1980	$0. 236435
March 11, 1980	. 235710
March 12, 1980	. 236518
March 13, 1980	. 235266
March 14, 1980	. 233891
Germany deutsche mark:	
March 10, 1980	$0. 552639
March 11, 1980	. 551876
March 12, 1980	. 553220
March 13, 1980	. 548998
March 14, 1980	. 545554

Ireland pound:	
March 10, 1980	$2.0400
March 11, 1980	2.0415
March 12, 1980	2.0420
March 13, 1980	2.0280
March 14, 1980	2.0125
Italy lira:	
March 13, 1980	$0.001182
March 14, 1980	.001173
Netherlands guilder:	
March 13, 1980	$0.500250
March 14, 1980	.497265
Switzerland franc:	
March 10, 1980	$0.576369
March 11, 1980	.576535
March 12, 1980	.578202
March 13, 1980	.573394
March 14, 1980	.570125

(LIQ-3-TRODE)

Dated: March 26, 1980.

G. SCOTT SHREVE
(For Chester R. Krayton,
Director, Duty Assessment Division).

U.S. Customs Service

General Notice

(19 CFR Part 152)

Valuation of Imported Merchandise for Customs Purposes

AGENCY: U.S. Customs Service, Department of the Treasury.

ACTION: Proposed rule.

SUMMARY: This document proposes to amend the Customs Regulations to enable the Customs Service (Customs) to implement and administer the provisions of title II of Public Law 96–39, the "Trade Agreements Act of 1979," relating to the valuation of imported merchandise for Customs purposes.

The more significant changes are:

1. To eliminate section 402a, Tariff Act of 1930, as amended (19 U.S.C. 1402), the basis for appraising final list articles.

2. To eliminate the American selling price basis for valuation.

3. To provide five bases—one primary and four secondary—for determining customs value:

a. Transaction value of the imported merchandise (the primary basis);

b. Transaction value of identical merchandise;

c. Transaction value of similar merchandise;

d. Deductive value; and

e. Computed value.

4. To provide that if Customs rejects the transaction value in a particular instance, the importer will be notified of the rejection, receive an explanation of the action, and be given 20 days in which to reply if in disagreement.

5. To provide that Customs, upon written request, shall furnish an importer with a written explanation of how the customs value of the imported merchandise was determined.

6. To provide that information submitted by an importer, buyer, or producer regarding the valuation of merchandise will not be rejected on the basis of the accounting method used to prepare the

information if the preparation was in accordance with "generally accepted accounting principles."

The proposed amendments are considered to be significant.

DATE: Comments must be received on or before (60 days after publication in the Federal Register).

ADDRESS: Written comments should be addressed to the Commissioner of Customs, Attention: Regulations and Research Division, U.S. Customs Service, 1301 Constitution Avenue NW., room 2335, Washington, D.C. 20229.

FOR FURTHER INFORMATION CONTACT: Thomas Lobred, 202-566-2938 or Richard Rosettie, 202-566-8235, Office of Commercial Operations.

SUPPLEMENTARY INFORMATION:

BACKGROUND

Public Law 96-39 (93 Stat. 144), the Trade Agreements Act of 1979, approved July 26, 1979 (the act), incorporates into U.S. law the trade agreements negotiated by the United States in the Tokyo Round of Multilateral Trade Negotiations (MTN) and transmitted to the Congress by the President on June 19, 1979.

Title II of the act, Customs valuation, implements the agreement on implemention of article VII of the General Agreement on Tariffs and Trade (the agreement) relating to customs valuation. Title II makes significant changes in the laws administered by the Customs Service relating to the valuation of imported merchandise. This document proposes to amend the Customs Regulations to implement and administer the provisions of title II.

EFFECTIVE DATES

1. The effective dates for implementing the provisions of title II (the new value law in this document) have not been determined.

Pursuant to section 2(b)(2) of the act, title II would apply between the United States and another country only if that country has accepted the agreement and the President determines it should not otherwise be denied the benefits of the agreement with respect to the United States because that country has not accorded adequate benefits, including substantially equal competitive opportunities for the commerce of the United States to the extent required under section 126(c), Trade Act of 1974 (19 U.S.C. 2136(c)), to the United States. However, pursuant to section 2(b) (3) of the act, the President may not accept the agreement with respect to another country unless he determines that, with certain exceptions, each "major industrial country," as defined in section 126(d), Trade Act of 1974 (19 U.S.C. 2136(d)), is accepting the agreement.

315-596 O - 80 - 3

Under section 204 of title II, the amendments made by title II will take effect on January 1, 1981, if the agreement enters into force with respect to the United States, or on the date after January 1, 1981, on which the agreement enters into force, subject to two exceptions:

a. Section 204(a)(2) provides that if the President determines before January 1, 1981, that the European Economic Community (EEC) (and the other major industrial countries (see sec. 2(b)(3) of the act)) have accepted the obligations of the agreement with respect to the United States, and each member state of the EEC has implemented the agreement under its laws, the President shall announce by proclamation such determination. The amendments made by title II, except those relating to certain rubber footwear, would take effect on the date specified in the proclamation, but not before July 1, 1980.

b. Section 204(c) provides that the amendments made by section 223(b), relating to certain rubber footwear, will take effect on July 1, 1981, or the date on which the agreement enters into force with respect to the United States, whichever is later.

2. Implementation of the new value law will neither repeal nor amend automatically sections 402 and 402a, Tariff Act of 1930, as amended (19 U.S.C. 1401a, 1402) (the current value law in this document), with regard to merchandise exported to the United States before the respective effective dates. When the applicable effective dates have been determined, the new value law will be applicable to merchandise exported to the United States on or after the applicable effective date, and the value will be determined in accordance with section 402, Tariff Act of 1930, as amended by section 201 of the act.

However, the current value law, sections 402 and 402a, Tariff Act of 1930, as amended, will apply to merchandise exported to the United States before the applicable effective date. This would include merchandise in a Customs-bonded warehouse, in a foreign-trade zone, or in international transit to the United States before the applicable effective date.

Because of the necessity to continue to administer the current value law for an indefinite period while it also implements the new value law, Customs proposes to amend its regulations to provide for a new subpart relating to the new value law while retaining the regulations relating to the current value law.

CURRENT VALUE LAW

The current U.S. valuation system consists of two separate laws, sections 402 and 402a, Tariff Act of 1930, as amended (19 U.S.C. 1401a, 1402). There are nine bases for determining Customs value under these laws.

Five bases for determining value were established in the Tariff Act of 1930, before its amendment by the Customs Simplification Act of 1956. These bases, set forth in section 402a, are export value, foreign value, U.S. value, cost of production, and American selling price. Articles which are valued under these bases are listed in T.D. 54521 and are called final list articles. Under section 402a, valuation is based upon an article's export value or foreign value, whichever is higher. If neither export nor foreign value can be determined, valuation then is determined on the basis of the U.S. value. If U.S. value cannot be determined, a cost of production basis is used. American selling price as a basis for value under section 402a is discussed below.

1. Export value essentially is the price at which merchandise is freely offered for sale to all purchasers in the usual wholesale quantities in the principal markets of the exporting country for export to the United States.

2. Foreign value essentially is the price of merchandise for sale in the home market of the country of exportation which is the same as or similar to imported merchandise and which is freely offered for sale in the country of exportation to all purchasers in the usual wholesale quantities.

3. U.S. value is essentially the freely offered resale price in the United States of merchandise which is the same as or similar to the imported merchandise, with deductions from that price for duty, cost of transportation and insurance, and other expenses from the place of shipment to the place of delivery, and a commission or profit and general expenses

4. Cost of production is the aggregate of the costs of producing the merchandise and placing it in condition, packed ready for shipment to the United States, plus an amount for general expenses and profit.

There are four bases for determining value under section 402, established by the Customs Simplification Act of 1956—export value, U.S. value, constructed value, and American selling price. Under section 402, valuation is based upon an article's export value, if it can be determined. If not, U.S. value is used. If U.S. value cannot be determined, constructed value is used. American selling price as a basis for value under section 402 is discussed below.

1. Export value essentially is the price at the time of exportation at which merchandise the same as or similar to imported merchandise is freely sold or offered for sale in the usual wholesale quantities in the exporting country for export to the United States.

2. U.S. value under section 402 is similar to U.S. value under section 402a, except that there are no statutory maximums for commissions or for profit and general expenses.

3. Constructed value is similar to cost of production under section

402a, except that there are no statutory minimums for general expenses and profit.

AMERICAN SELLING PRICE

American selling price (ASP), as used in both sections 402 and 402a, essentially is the selling price in the United States of a domestic article which is like or similar to the imported article. ASP is used for specific articles. These are benzenoid chemicals, certain plastic or rubber-soled footwear, canned clams, and certain gloves (see sec. 152.24, Customs Regulations (19 CFR 152.24)).

NEW VALUE LAW

Section 201 of title II repeals section 402a of the Tariff Act of 1930, as amended.

Section 201 also amends section 402 to provide for five bases for determining value presented in a hierarchical manner. The first and primary basis is transaction value. If transaction value cannot be determined, or if determined, cannot be used, then the second basis, the transaction value of identical merchandise, is used. If transaction value of identical merchandise cannot be determined, then transaction value of similar merchandise is used. If transaction value of similar merchandise cannot be determined then deductive value is used. If deductive value cannot be determined, then computed value is used.

The act also provides that if none of the five bases can be use, then a value will be derived from one of those bases, reasonably adjusted.

The act further provides, with respect to the order of priority, that the importer may elect to have the merchandise appraised on the basis of computed value, rather than deductive value. However, if computed value cannot be determined, the merchandise will be appraised on the basis of deductive value. If deductive value cannot be determined, the merchandise will be appraised on the basis of one of the five bases, reasonably adjusted.

SECTION 500, TARIFF ACT OF 1930

Section 500(a) of the Tariff Act of 1930 has been amended by section 202(a)(4) of the act to provide that amended section 402 will be the basis for ascertaining the value of merchandise exported to the United States after the effective dates of the act previously referred to. The legislative history states that the Customs officer shall appraise merchandise under section 402, and that section 500 is not a separate basis of valuation but is used to permit Customs to consider the best evidence available in appraising merchandise.

TRANSACTION VALUE

New section 402(b) provides essentially that the transaction value of imported merchandise is the price actually paid or payable, as

defined in section 402(b)(4)(A), for the merchandise when sold for exportation to the United States. The price actually paid or payable is the total payment, less any costs, charges, or expenses incurred for transportation, insurance, and related services incident to the international shipment of the merchandise from the country of exportation to the place of importation in the United States made, or to be made, for imported merchandise by the buyer to, or for the benefit of, the seller.

To this payment may be added amounts equal to (1) packing costs incurred by the buyer; (2) any selling commission incurred by the buyer; (3) any assist as defined in section 402(h)(1); (4) any royalty or license fee the buyer is required to pay as a condition of sale of the merchandise to him; and (5) proceeds of a subsequent resale, disposal, or use of the imported merchandise accruing to the seller. These additions, and no others, may be made to the price actually paid or payable only if they are not otherwise included and are based upon sufficient information (as defined in sec. 402(h)(5)). If additions cannot be made on the basis of such information, the transaction value cannot be determined.

Certain items will not be included in the transaction value if identified separately from the price actually paid or payable and from the items specified in section 402(b)(1). New section 402(b)(3) provides that these items are (1) any reasonable cost or charge incurred for the construction, erection, assembly, or maintenance of, or technical assistance provided with respect to, the merchandise after its importation; (2) any reasonable cost or charge for the transportation of the merchandise after its importation; and (3) customs duties and other Federal taxes payable on the merchandise by reason of its importation.

New section 402(b)(2) sets forth those factors which may lead to a rejection of transaction value. These factors include: (1) Certain restrictions on the disposition or use of the imported merchandise other than those which are imposed or required by law, which limit the geographical area of resale, or which do not substantially affect the value of the merchandise; (2) conditions or considerations attaching to the sale or price of the imported merchandise for which a value cannot be determined with respect to the imported merchandise; (3) cases where proceeds from a subsequent resale, disposal, or use of the imported merchandise accrue to the seller, and an appropriate addition cannot be made to the price paid or payable; and (4) cases where the buyer and seller are related, as defined in section 402(g)(1), and the transaction value is not acceptable.

New section 402(b)(4)(B) provides that any rebate of, or other decrease in, the price actually paid or payable that is made or other-

wise effected between the buyer and seller after the date of importation of the merchandise will be disregarded in determining transaction value.

TRANSACTION VALUE OF IDENTICAL MERCHANDISE AND SIMILAR MERCHANDISE

Section 402(c) provides that the transaction value of identical merchandise is the previously accepted transaction value of imported merchandise identical to that being appraised, adjusted if appropriate for commercial and quantity levels, sold for export to the United States and exported at or about the same time as the merchandise being appraised. The transaction value of similar merchandise is the previously accepted transaction value of imported merchandise similar to that being appraised, adjusted if appropriate for commercial and quantity levels, sold for export to the United States, and exported at or about the same time as the merchandise being appraised. The terms "identical merchandise" and "similar merchandise" are defined in section 402(h).

DEDUCTIVE VALUE

Section 402(d) provides that deductive value will be based upon one of three appropriately adjusted prices depending upon when and in what condition the imported merchandise is sold to unrelated persons in the United States. Sales to unrelated persons in the United States are the only sales which may be used in determining deductive value.

1. If the merchandise concerned is sold in the condition as imported at or about the date of importation of the merchandise being appraised, the price is the unit price at which the merchandise concerned is sold in the greatest aggregate quantity at or about such date.

2. If the merchandise concerned is sold in the condition as imported, but is not sold at or about the date of importation of the merchandise being appraised, the price is the unit price at which the merchandise concerned is sold in the greatest aggregate quantity after the date of importation of the merchandise being appraised but before the close of the 90th day after the date of such importation.

3. If the merchandise concerned is not sold in the condition as imported before the close of the 90th day after the date of importation of the merchandise being appraised, the price is the unit price at which the merchandise being appraised, after further processing, is sold in the greatest aggregate quantity before the 180th day after the date of such importation. The importer must specifically elect to use this "further processing" option, and notify the Customs officer concerned of that election.

The unit price determined then will be reduced by an amount equal to:

1. Commissions paid or agreed to be paid, or additions usually made for profit and general expenses, in connection with sales in the United States of imported merchandise of the same class or kind as the merchandise being appraised;

2. Actual costs and associated costs of transportation and insurance incurred with respect to international shipment of the merchandise;

3. Usual costs and associated costs of transportation and insurance incurred within the United States with respect to such merchandise;

4. Customs duties and other Federal taxes imposed on the merchandise by reason of its importation, and Federal excise taxes on the merchandise for which vendors in the United States are ordinarily liable; and

5. In the case of a price determined under the "further processing" method, the value added by that processing after importation into the United States.

The deduction made for profit and general expenses must be based upon the importer's profit and general expenses, unless they are inconsistent with those reflected in sales in the United States of imported merchandise of the same class or kind.

For purposes of determining deductive value, any sale to a person who supplies any assist for use in the production or sale for export of the merchandise will be disregarded.

COMPUTED VALUE

Section 402(e) provides that computed value is the sum of:

1. The cost or value of the materials and the fabrication and other processing employed in the production of the imported merchandise;

2. An amount for profit and general expenses equal to that usually reflected in sales of merchandise of the same class or kind as the imported merchandise that are made by the producers in the country of exportation for export to the United States;

3. Any assist, if not included in paragraph (1) or (2) above; and

4. The packing costs.

The amount for profit and general expenses included in the computed value will be based upon the producer's profit and expenses, unless those figures are inconsistent with those usually reflected in sales of merchandise of the same class or kind as the imported merchandise that are made by the producers in the country of exportation.

GENERAL DISCUSSION

ASSISTS

An assist is an item or service supplied directly or indirectly free of charge or at a reduced cost for use in connection with the production or the sale for export to the United States of imported merchandise.

Whereas under the current value law, the existence of an assist requires appraisement under a secondary valuation basis, the new value law provides for the addition of the value of an assist directly to the price to arrive at transaction value. Under the current practice, an assist generally is dutiable regardless of who furnishes the assist. Under the act, an assist is dutiable only if furnished directly or indirectly by the buyer of the imported merchandise. Under current practice, certain assists such as engineering and design work, wherever undertaken, are dutiable. Under the act, as it relates to transaction value, the only assists of this type that are dutiable are engineering, development, artwork, design work, and plans and sketches undertaken elsewhere than in the United States. However, if service or work is performed outside the United States by a U.S. domiciliary who is acting as an employee or agent of the buyer, and the work or service is incidental to other engineering, development, artwork, design work, or plans or sketches that are undertaken in the United States, the service or work is not treated as an assist.

The concept of an assist is relevant in the following circumstances: (1) as an addition to the price actually paid or payable in transaction value, (2) as an element comprising computed value, or (3) as a factor in determining the suitability of deductive value as a basis of value.

ROYALTY OR LICENSE FEE

The addition of an amount for a royalty or license fee to the price actually paid or payable for the imported merchandise in determining transaction value generally follows current practice. However, certain elements called "royalties" may or may not fall within the scope of section 402(b)(1)(D) or section 402(b)(1)(E), relating to proceeds of any subsequent resale, disposal, or use of the imported merchandise accruing to the seller.

SUFFICIENT INFORMATION

Under section 402(h)(5), "sufficient information" means information that establishes the accuracy of:

1 Any amount:

Added to the price actually paid or payable, in determining transaction value,

Deducted as profit or general expenses or value from further processing, in determining deductive value, or

Added as profit or general expenses, in determining computed value.

2. Any difference taken into account in connection with sales between related persons, in determining transaction value, or

3. Any adjustment made in determining the transaction value of identical or similar merchandise.

GENERALLY ACCEPTED ACCOUNTING PRINCIPLES

Under section 402(g)(3), information submitted by an importer, buyer, or producer concerning the appraisement of merchandise may not be rejected by Customs solely on the basis of the accounting method used to prepare the information if the preparation was in accordance with "generally accepted accounting principles." This term is defined to mean any generally recognized consensus or substantial authoritative support regarding:

Which economic resources and obligations should be recorded as assets and liabilities,

Which changes in assets and liabilities should be recorded,

How the assets and liabilities and changes in them should be measured,

What information should be disclosed and how it should be disclosed, and

Which financial statement should be prepared.

RELATED PERSONS

Under section 402(b)(2)(B), two alternative methods are available to determine whether transaction value may be acceptable if the buyer and seller of imported merchandise are related. If an examination of the circumstances of sale of the imported merchandise indicates that the relationship did not influence the price, the transaction value may be accepted without further inquiry provided all other conditions are met. The transaction value of the imported merchandise also may be accepted if the transaction value "closely approximates" one of the following test values:

1. The transaction value of identical or similar merchandise in sales to unrelated buyers in the United States;

2. The deductive value or computed value of identical or similar merchandise; or

3. The transaction value in sales to unrelated buyers in the United States of merchandise that is identical to the imported merchandise except for having been produced in a different country.

Under the current law, the only standard that may be used to determine the acceptability of related party transactions is whether the related-party price "fairly reflects the market value."

UNACCEPTABLE BASES OF APPRAISEMENT

Under section 402(f)(2), imported merchandise may not be appraised on the basis of:

1. The selling price in the United States of merchandise produced in the United States;

2. A system that provides for appraisement of imported merchandise at the higher of two alternative values;

315-596 O - 80 - 4

3. The price of merchandise in the domestic market of the country of exportation;

4. A cost of production, other than a computed value for merchandise that is identical or similar to the merchandise being appraised;

5. The price of merchandise for export to a country other than the United States;

6. Minimum values for appraisement; or

7. Arbitrary or fictitious values.

ANTIDUMPING DUTIES AND COUNTERVAILING DUTIES

The statutory changes made to section 402, Tariff Act of 1930, as amended, and the regulatory changes proposed under that section do not change or affect those separate provisions of U.S. law that set forth how imported merchandise is to be appraised for the purpose of levying antidumping or countervailing duties.

NOTICE OF VALUE DETERMINATION

Section 402(a)(3) provides that upon written request by the importer, and subject to the provisions of law regarding the disclosure of information, Customs will provide the importer with a reasonable and concise written explanation of how the Customs value of the merchandise was determined.

DISCUSSION OF PROPOSED AMENDMENTS

Accordingly, to reflect the statutory changes made by title II of the act, it is proposed to amend part 152, Customs Regulations (19 CFR part 152), by adding a new section 152.20 to subpart C and a new subpart E, entitled "Valuation of Merchandise," divided into nine sections, as described below:

NEW SECTION 152.20 OF SUBPART C—APPRAISEMENT

Proposed section 152.101(a), discussed below, would provide that the Customs value of merchandise exported to the United States after the effective dates of title II of the act will be appraised under the provisions of proposed subpart E, which implements the new value law. Therefore, proposed section 152.20 would be added to subpart C, "Appraisement," to make clear that merchandise exported to the United States before the effective dates of title II will continue to be appraised under the current value law.

NEW SUBPART E—VALUATION OF MERCHANDISE

1. Proposed section 152.100 would state that the interpretative notes set forth in subpart E have been derived from information contained in the statement of administrative action relating to Customs valuation, submitted to and approved by Congress along with

the act, and will have the force and effect of regulations issued under this subpart.

2. Proposed section 152.101(a) would provide that the Customs value of merchandise exported to the United States on or after the effective dates of title II of the act will be determined in accordance with section 402, Tariff Act of 1930 (19 U.S.C. 1401a), as amended by section 201 of the act.

Proposed section 152.101(b) would provide that imported merchandise will be appraised on the basis, and in the order, of the following:

a. Transaction value provided for in section 152.103;

b. Transaction value of identical merchandise provided for in section 152.104, if the transaction value cannot be determined, or can be determined but cannot be used because of the limitations provided for in section 152.103(j);

c. Transaction value of similar merchandise provided for in section 152.104, if the transaction value of identical merchandise cannot be determined;

d. Deductive value provided for in section 152.105, if the transaction value of similar merchandise cannot be determined;

e. Computed value provided for in section 152.106, if deductive value cannot be determined; or

f. The value provided for in section 152.107, if the computed value cannot be determined.

Proposed section 152.101(c) would set forth the procedure whereby the importer may request, at the time the entry summary is filed, that computed value be used before deductive value to appraise imported merchandise.

Proposed section 152.101(d) would provide the procedure whereby the district director shall provide a reasonable and concise written explanation of how the Customs value of the merchandise was determined.

3. Proposed section 152.102 would define the following terms:

a. Assist,

b. Commission (buying or selling),

c. Generally accepted accounting principles,

d. Identical merchandise,

e. Packing costs,

f. Price actually paid or payable,

g. Related persons,

h. Same class or kind,

i. Similar merchandise,

j. Sufficient information, and

k. Unit price in greatest quantity.

4. Proposed section 152.103 would discuss transaction value. Paragraph (a) would discuss price actually paid or payable and provide examples. Paragraph (b) would discuss the additions to the price actually paid or payable for the imported merchandise, and paragraph (c) would provide that additions to the price actually paid or payable will be made only when there is information sufficient to establish the accuracy of the additions and the extent to which they were not included in the price. An interpretative note would be provided.

Paragraph (d) would discuss assists and provide examples, and paragraph (e) would discuss the apportionment of the value of assists and provide an interpretative note.

Paragraph (f) would discuss royalties or license fees and provide an example, and paragraph (g) would discuss proceeds of subsequent resale and provide an example. Paragraph (h) would discuss right to reproduce and provide an example.

Paragraph (i) would discuss the exclusions from transaction value, and paragraph (j) would provide the limitations on the use of transaction value.

Paragraph (k) would discuss restrictions and conditions on sale and provide interpretative notes. Paragraph (l) would discuss related buyer and seller and provide interpretative notes and examples.

Paragraph (m) would provide that when Customs has grounds for rejecting the transaction value declared by an importer and that rejection increases the duty liability, the district director shall inform the importer of the grounds for the rejection.

5. Proposed section 152.104 would discuss the transaction value of identical merchandise and similar merchandise. Paragraph (a) would set forth a general discussion on determining the value under this section. Paragraph (b) would provide that minor differences in appearance will not preclude otherwise conforming merchandise from being considered identical. Paragraph (c) would discuss factors considered to determine whether merchandise is similar. Paragraph (d) would discuss "commercial level and quantity," and paragraph (e) would discuss "adjustments" for identical and similar merchandise and provide an interpretative note.

6. Proposed section 152.105 would discuss "deductive value." Paragraph (a) would discuss "merchandise concerned," and paragraph (b) would discuss "merchandise of the same class or kind." Paragraph (c) would set forth the three variables for determining the prices which would be appropriate for determining deductive value. The regulations would provide that the importer must make his election to use the further processing method at the time of filing the entry summary.

Paragraph (d) would discuss "deductions from price" determined under section 152.105(c). Paragraph (e) would discuss the special

rules relating to profit and general expenses. Paragraph (f) would provide that the price determined under section 152.105(c) will be increased by an amount equal to the packing costs incurred by the importer.

Paragraph (g) would provide that for purposes of determining deductive value, any sale to a person who supplies any assist for use in connection with the production or sale for export of the merchandise concerned will be disregarded.

Paragraph (h) would discuss "unit price in greatest aggregate quantity" and provide three interpretative notes. Paragraph (i) would discuss "further processing" and provide an example.

7. Proposed section 152.106 would discuss "computed value." Paragraph (a) would provide the elements comprising computed value, and paragraph (b) would discuss special rules relating to proposed section 152.106(a). Paragraph (c) would discuss "profit and general expenses" and provide interpretative notes.

Paragraph (d) would discuss "assists and packing costs," and paragraph (e) would discuss "merchandise of the same class or kind" and provide an example. Paragraph (f) would discuss "availability of information."

8. Proposed section 152.107 would discuss how Customs value is to be derived if the other value bases cannot be determined or used. Paragraph (a) would provide that if the value of imported merchandise cannot be determined or used under proposed sections 152.103 through 152.106, the merchandise will be appraised on the basis of a value that is derived from the bases set forth in those sections, with the methods reasonably adjusted to the extent necessary to arrive at a value.

Paragraph (b) would discuss "identical merchandise" and "similar merchandise." Paragraph (c) would provide that the "90 days" requirement relating to deductive value for the sale of merchandise may be administered flexibly, and would provide an example.

9. Proposed section 152.108 would provide that imported merchandise may not be appraised on the basis of the items listed.

AUTHORITY

These amendments are proposed under the authority of R.S. 251, as amended (19 U.S.C. 66); section 624, 46 Stat. 759 (19 U.S.C. 1624); and title II, Public Law 96–39 (July 26, 1979).

COMMENTS

Before adopting this proposal, consideration will be given to any written comments, preferably in triplicate, that are submitted timely to the Commissioner of Customs. Comments submitted will be available for public inspection in accordance with section 103.8(b) Customs Regulations (19 CFR 103.8(b)), during regular business hours at the

Regulations and Research Division, headquarters, U.S. Customs Service, 1301 Constitution Avenue NW., room 2335, Washington, D.C. 20229.

Customs specifically solicits comments on (1) proposed section 152.101(c), relating to the importer's requesting the application of computed value before deductive value at the time the entry summary is filed; and (2) proposed section 152.105(c)(3), relating to the election of the importer to use the "further processing method" at the time of filing the entry summary.

DRAFTING INFORMATION

The principal authors of this document were Todd J. Schneider and Charles D. Ressin, Regulations and Research Division, Office of Regulations and Rulings, U.S. Customs Service. However, personnel from other Customs offices participated in its development.

PROPOSED AMENDMENTS

It is proposed to amend part 152, Customs Regulations (19 CFR part 152), in the following manner:

PART 152—CLASSIFICATION AND APPRAISEMENT OF MERCHANDISE

SUBPART C—APPRAISEMENT

It is proposed to add a new section 152.20 to read as follows:

152.20 Effective date

The value for appraisement of merchandise exported to the United States before (the effective dates of title II of Public Law 96–39) will be determined in accordance with this subpart.

SUBPART E—VALUATION OF MERCHANDISE

It is proposed to add a new subpart E, "Valuation of Merchandise," to read as follows:

152.100 Interpretative notes

The interpretative notes set forth in this subpart have been derived from information contained in the Statement of Administrative Action relating to Customs valuation, submitted to and approved by Congress along with the Trade Agreements Act of 1979 (Public Law 96–39), and will have the force and effect of regulations issued under this subpart.

152.101 Basis of appraisement

(a) *Effective date.*—The value for appraisement of merchandise exported to the United States on or after (the effective dates of title II of Public Law 96–39) will be determined in accordance with section 402, Tariff Act of 1930 (19 U.S.C. 1401a), as amended by section 201, Trade Agreements Act of 1979.

(b) *Methods.*—Imported merchandise will be appraised on the basis, and in the order, of the following:

(1) The transaction value provided for in section 152.103;

(2) The transaction value of identical merchandise provided for in section 152.104, if the transaction value cannot be determined, or can be determined but cannot be used because of the limitations provided for in section 152.103(j);

(3) The transaction value of similar merchandise provided for in section 152.104, if the transaction value of identical merchandise cannot be determined;

(4) The deductive value provided for in section 152.105, if the transaction value of similar merchandise cannot be determined;

(5) The computed value provided for in section 152.106, if the deductive value cannot be determined; or

(6) The value provided for in section 152.107, if the computed value cannot be determined.

(c) *Importer's option.*—The importer may request the application of the computed value method before the deductive value method. The request must be made at the time the entry summary for the merchandise is filed with the district director (see sec. 141.0a(b) of this chapter). If the importer makes the request, but the value of the imported merchandise cannot be determined using the computed value method, the merchandise will be appraised using the deductive value method if it is possible to do so. If the deductive value cannot be determined, the appraised value will be determined as provided for in section 152.107.

(d) *Explanation to importer.*—Upon receipt of a written request from the importer within 90 days of liquidation, the district director shall provide a reasonable and concise written explanation of how the value of the imported merchandise was determined. The explanation will apply only to the imported merchandise being appraised and will not serve as authority with respect to the valuation of importations of any other merchandise at the same or a different port of entry. This procedure is for informational purposes only, and will not affect or replace the protest or administrative ruling procedures contained in parts 174 and 177, respectively, of this chapter, or any other Customs procedures. Under this procedure, Customs will not be required to release any information not otherwise subject to disclosure under the Freedom of Information Act, as amended (5. U.S.C. 552), the Privacy Act of 1974 (5 U.S.C. 522a), or any other statute (see part 103 of this chapter).

152.102 Definitions

As used in this subpart, the following terms will have the meanings indicated:

(a) *Assist.*—(1) "Assist" means any of the following if supplied directly or indirectly, and free of charge or at reduced cost, by the buyer of imported merchandise for use in connection with the production or the sale for export to the United States of the merchandise:

(i) Materials, components, parts, and similar items incorporated in the imported merchandise.

(ii) Tools, dies, molds, and similar items used in the production of the imported merchandise.

(iii) Merchandise consumed in the production of the imported merchandise.

(iv) Engineering, development, artwork, design work, and plans and sketches that are undertaken elsewhere than in the United States and are necessary for the production of the imported merchandise.

(2) No service or work to which subsection (1)(iv) applies will be treated as an assist if the service or work—

(i) Is performed by an individual domiciled within the United States;

(ii) Is performed by that individual while acting as an employee or agent of the buyer of the imported merchandise; and

(iii) Is incidental to other engineering, development, artwork, design work, or plans or sketches that are undertaken within the United States.

(3) The following apply in determining the value of assists described in subsection (1)(iv)—

(i) The value of an assist that is available in the public domain is the cost of obtaining copies of the assist.

(ii) If the production of an assist occurred in the United States and one or more foreign countries, the value of the assist is the value added outside the United States.

(iii) If the assist was purchased or leased by the buyer from an unrelated person, the value of the assist is the cost of the purchase or of the lease.

(b) *Commission.*—"Buying commission" ordinarily means a fee paid by the buyer to an agent for the service of representing the buyer abroad in the purchase of the merchandise being appraised.

(2) "Selling commission" means any commission incurred by the buyer other than a buying commission.

(c) *Generally accepted accounting principles.*—(1) "Generally accepted accounting principles" refers to any generally recognized consensus or substantial authoritative support regarding—

(i) Which economic resources and obligations should be recorded as assets and liabilities;

(ii) Which changes in assets and liabilities should be recorded;

(iii) How the assets and liabilities and changes in them should be measured;

(iv) What information should be disclosed and how it should be disclosed; and

(v) Which financial statements should be prepared.

(2) The applicability of a particular set of generally accepted accounting principles will depend upon the basis on which the value of the imported merchandise is sought to be established.

(3) Information submitted by an importer, buyer, or producer in regard to the appraisement of merchandise may not be rejected by Customs because of the accounting method by which that information was prepared, if the preparation was in accordance with generally accepted accounting principles.

(d) *Identical merchandise.*—"Identical merchandise" means merchandise identical in all respects to, and produced in the same country and by the same person as, the merchandise being appraised. If identical merchandise cannot be found (or for purposes of related buyer and seller transactions (see sec. 152.103(j)(2)(i)(A)), regardless of whether identical merchandise can be found), merchandise identical in all respects to, and produced in the same country as, but not produced by the same person as, the merchandise being appraised, may be treated as identical merchandise. Identical merchandise does not include merchandise that incorporates or reflects any engineering, development, artwork, design work, or plan or sketch supplied free or at reduced cost by the buyer of the merchandise for use in connection with the production or sale for export to the United States of the merchandise, and is not an assist because undertaken within the United States.

(e) *Packing costs.*—"Packing costs" means the cost of all containers and coverings of whatever nature and of packing, whether for labor or materials, used in placing merchandise in condition, packed ready for shipment to the United States.

(f) *Price actually paid or payable.*—"Price actually paid or payable" means the total payment (whether direct or indirect, and exclusive of any charges, costs, or expenses incurred for transportation, insurance, and related services incident to the international shipment of the merchandise from the country of exportation to the place of importation in the United States) made, or to be made, for imported merchandise by the buyer to, or for the benefit of, the seller.

(g) *Related persons.*—"Related persons" means: (1) Members of the same family, including brothers and sisters (whether by whole or half blood), spouse, ancestors, and lineal descendants.

(2) Any officer or director of an organization, and that organization.

(3) An officer or director of an organization and an officer or director

315-596 O - 80 - 5

of another organization, if each individual also is an officer or director in the other organization.

(4) Partners.

(5) Employer and employee.

(6) Any person directly or indirectly owning, controlling, or holding with power to vote, 5 percent or more of the outstanding voting stock or shares of any organization, and that organization.

(7) Two or more persons directly or indirectly controlling, controlled by, or under common control with, any person.

(h) *Same class or kind.*—"Merchandise of the same class or kind" mean merchandise (including, but not limited to, identical merchandise and similar merchandise) within a group or range of merchandise produced by a particular industry or industry sector.

(i) *Similar merchandise.*—"Similar merchandise" means merchandise produced in the same country and by the same person as the merchandise being appraised, like the merchandise being appraised in characteristics and component material, and commercially interchangeable with the merchandise being appraised. If similar merchandise cannot be found (or for purposes of related buyer and seller transactions (see sec. 152.103(j)(2)(i)(A)), regardless of whether similar merchandise can be found), merchandise produced in the same country as, but not produced by the same person as, the merchandise being appraised, like the merchandise being appraised in characteristics and component material, and commercially interchangeable with the merchandise being appraised, may be treated as "similar merchandise". "Similar merchandise" does not include merchandise that incorporates or reflects any engineering, development, artwork, design, work, or plan or sketch supplied free or at reduced cost by the buyer of the merchandise for use in connection with the production or the sale for export to the United States of the merchandise, and is not an assist because undertaken within the United States.

(j) *Sufficient information.*—"Sufficient information" means information that establishes the accuracy of:

(1) Any amount—

(i) Added under section 152.103(b) to the price actually paid or payable,

(ii) Deducted under section 152.105(d) as profit or general expenses or value from further processing, or

(iii) Added under section 152.106(b) as profit or general expenses; or

(2) Any difference taken into account under section 152.103(j)(2)(iv); or

(3) Any adjustment made under section 152.104(d).

(k) *Unit price in greatest aggregate quantity.*—"Unit price at which merchandise is sold in the greatest aggregate quantity" means the

unit price at which the "merchandise concerned" is sold to unrelated persons at the first commercial level after importation (in cases to which secs. 152.105(c) (1) and (2) apply), or after further processing (in cases to which sec. 152.105(c)(3) applies), at which the sales take place in a total volume greater than the total volume sold at any other unit price and sufficient to establish the unit price.

152.103 Transaction value

(a) *Price actually paid or payable.* (1) *General.*—In determining transaction value, the price actually paid or payable will be considered without regard to its method of derivation. It may be the result of discounts, increases, or negotiations, or may be arrived at by the application of a formula, such as the price in effect on the date of export in the London Commodity Market. The word "payable" refers to a situation in which the price has been agreed upon, but actual payment has not been made at the time of importation. Payment may be made by letters of credit or negotiable instruments and may be made directly or indirectly.

(2) *Indirect payment.*—An indirect payment would include the settlement by the buyer, in whole or in part, of a debt owed by the seller, or where the buyer receives a price reduction on a current importation as a means of settling a debt owed him by the seller. Activities such as advertising, undertaken by the buyer on his own account, other than those for which an adjustment is provided in section 152.103(b), will not be considered an indirect payment to the seller though they may benefit the seller. The costs of those activities will not be added to the price actually paid or payable in determining the customs value of the imported merchandise.

(3) *Assembled merchandise.*—The price actually paid or payable may represent an amount for the assembly of imported merchandise in which the seller has no interest other than as the assembler. The price actually paid or payable in that case will be calculated by the addition of the value of the components and required adjustments to form the basis for the transaction value.

(4) *Rebate.*—Any rebate of, or other decrease in, the price actually paid or payable made or otherwise effected between the buyer and seller after the date of importation of the merchandise will be disregarded in determining the transaction value under section 152.103(b).

Example 1.—In a transaction with foreign company X, a U.S. firm pays company X $10,000 for a shipment of meat products, packed ready for shipment to the United States. No selling commission, assist, royalty, or license fee is involved. Company X is not related to the U.S. purchaser and imposes no condition or limitation on the buyer.

The customs value of the imported meat products is $10,000—the transaction value of the imported merchandise.

Example 2.—A foreign shipper sold merchandise at $100 per unit to a U.S. importer. Subsequently, the foreign shipper increased its price to $110 per unit. The merchandise was exported after the effective date of the price increase. The invoice price of $100 was the price originally agreed upon and the price the U.S. importer actually paid for the merchandise.

How should the merchandise be appraised?

Actual transaction value based on the price actually paid or payable.

Example 3.—A foreign shipper sells to U.S. wholesalers at one price and to U.S. retailers at a higher price. The shipment undergoing appraisement is a shipment to a U.S. retailer. There are continuing shipments of identical and similar merchandise to U.S. wholesalers.

How should the merchandise be appraised?

Actual transaction value based on the price actually paid or payable by the retailer.

Example 4.—Company X in the United States pays $2,000 to Y toy factory abroad for a shipment of toys. The $2,000 consists of $1,850 for the toys and $150 for ocean freight and insurance. Y toy factory would have charged company X $2,200 for the toys; however, because Y owed company X $350, Y charged only $1,850 for the toys. What is the transaction value?

The transaction value of the imported merchandise is $2,200, that is, the sum of the $1,850 plus the $350 indirect payment. Because the transaction value excludes c.i.f. charges, the $150 ocean freight and insurance charge is excluded.

(b) *Additions to price actually paid or payable.* (1) The transaction value of imported merchandise is the price actually paid or payable for the merchandise when sold for exportation to the United States, plus amounts equal to—

(i) The packing costs incurred by the buyer with respect to the imported merchandise;

(ii) Any selling commission incurred by the buyer with respect to the imported merchandise;

(iii) The value, apportioned as appropriate, of any assist;

(iv) Any royalty or license fee related to the imported merchandise that the buyer is required to pay, directly or indirectly, as a condition of the sale of the imported merchandise for exportation to the United States; and

(v) The proceeds of any subsequent resale, disposal, or use of the imported merchandise that accrue, directly or indirectly, to the seller.

(2) The price actually paid or payable for imported merchandise will be increased by the amounts attributable to the items (and no others) described in subsections (i) through (v) to the extent that each amount is not otherwise included within the price actually paid or payable, and is based on sufficient information. If sufficient information is not available, for any reason, with respect to any amount referred to in this section, the transaction value will be treated as one that cannot be determined.

(c) *Sufficiency of information.*—Additions to the price actually paid or payable will be made only if there is sufficient information to establish the accuracy of the additions and the extent to which they are not included in the price.

Interpretative note.—A royalty is paid on the basis of the price in a sale in the United States of a gallon of a particular product imported by the pound and transformed into a solution after importation. If the royalty is based partially on the imported merchandise and partially on other factors which have nothing to do with the imported merchandise (such as if the imported merchandise is mixed with domestic ingredients and is no longer separately identifiable, or if the royalty cannot be distinguished from special financial arrangements between the buyer and the seller), it would be inappropriate to attempt to make an addition for the royalty. However, if the amount of this royalty is based only on the imported merchandise and can be readily quantified, an addition to the price actually paid or payable will be made.

(d) *Assist.*—If the value of an assist is to be added to the price actually paid or payable, or to be used as a component of computed value, the district director shall determine the value of the assist and apportion that value to the price of the imported merchandise in the following manner:

(1) If the assist consists of materials, components, parts, or similar items incorporated in the imported merchandise, or items consumed in the production of the imported merchandise, acquired by the buyer from an unrelated seller, the value of the assist is the cost of its acquisition. If the assist were produced by the buyer or a person related to the buyer, its value would be the cost of its production. In either case, the value of the assist would include transportation costs to the place of production.

(2) If the assist consists of tools, dies, molds, or similar items used in the production of the imported merchandise, acquired by the buyer from an unrelated seller, the value of the assist is the cost of its acquisition. If the assist were produced by the buyer or a person related to the buyer, its value would be the cost of its production. If the assist has been used previously by the buyer, regardless of whether

it had been acquired or produced by him, the original cost of acquisition or production would be adjusted downward to reflect its use before its value could be determined. If the assist were leased by the buyer from an unrelated seller, the value of the assist would be the cost of the lease. In either case, the value of the assist would include transportation costs to the place of production. Repairs or modifications to an assist may increase its value.

Example 1.—A U.S. importer supplied detailed designs to the foreign producer. These designs were necessary to manufacture the merchandise. The U.S. importer bought the designs from an engineering company in the United States for submission to his foreign supplier.

Should the appraised value of the merchandise include the value of the assist?

No; design work undertaken in the United States is not to be included in dutiable value.

Example 2.—A U.S. importer supplied molds free of charge to the foreign shipper. The molds were necessary to manufacture merchandise for the U.S. importer. The U.S. importer had some of the molds manufactured by a U.S. company and others manufactured in a third country.

Should the appraised value of the merchandise include the value of the molds?

Yes. It is an addition required to be made to transaction value.

(e) *Apportionment.*—The apportionment of the value of assists to imported merchandise will be made in a reasonable manner appropriate to the circumstances and in accordance with generally accepted accounting principles. The method of apportionment actually accepted by Customs will depend upon the documentation submitted by the importer. If the entire anticipated production using the assist is for exportation to the United States, the total value may be apportioned over (1) the first shipment, if the importer wishes to pay duty on the entire value at once, (2) the number of units produced up to the time of the first shipment, or (3) the entire anticipated production. In addition to these three methods, the importer may request some other method of apportionment in accordance with generally accepted accounting principles. If the anticipated production is only partially for exportation to the United States, or if the assist is used in several countries, the method of apportionment will depend upon the documentation submitted by the importer.

Interpretative note.—An importer provides the producer with a mold to be used in the production of the imported merchandise and contracts to buy 10,000 units. By the time of arrival of the first shipment of 1,000 units, the producer has already produced

4,000 units. The importer may request Customs to apportion the value of the mold over 1,000, 4,000, or 10,000 units.

(f) *Royalties or license fees.*—Royalties or license fees for patents covering processes to manufacture the imported merchandise generally will be dutiable. Royalties or license fees paid to third parties for use in the United States, of copyrights and trademarks related to the imported merchandise generally will be considered selling expenses of the buyer and not dutiable. The dutiable status of royalties or license fees paid by the buyer will be determined in each case and will depend on (1) whether the buyer was required to pay them as a condition of sale of the merchandise for exportation to the United States, and (2) to whom and under what circumstances they were paid. Payments made by the buyer for the right to distribute or resell the imported merchandise will not be added to the price actually paid or payable for the imported merchandise if the payments are not a condition of the sale of the merchandise for exportation to the United States.

Example.—A foreign producer sold merchandise to an unrelated U.S. importer. The U.S. importer pays a royalty to an unrelated third party for the right to manufacture and sell a product made in part from the imported merchandise. The royalty is based on the selling price of the further-manufactured product in the United States.

Is the license fee part of the appraised value?

No. The license fee is not a condition of the sale of the imported merchandise for export to the United States.

(g) *Proceeds of subsequent resale.*—Additions to the price actually paid or payable will be made for the value of any part of the proceeds of any subsequent resale, disposal, or use of the imported merchandise that accrues directly or indirectly to the seller. Dividends or other payments from the buyer to the seller which do not relate directly to the imported merchandise will not be added to the price actually paid or payable. Whether any addition would be made will depend on the facts of the particular case.

Example.—A buyer contracts to import a new product. Not knowing whether the product ultimately will sell in the United States, the buyer agrees to pay the seller initially $1 per unit with an additional $1 per unit to be paid upon the sale of each unit in the United States. Assuming the resale price in the United States can be determined promptly, the transaction value of each unit would be $2. Otherwise, the transaction value could not be determined for want of sufficient information.

(h) *Right to reproduce.*—Charges for the right to reproduce the imported merchandise in the United States will not be added to the price actually paid or payable. The right to reproduce denotes that an

idea or an original work is incorporated in, or reflected by, the imported merchandise, and the right is reserved to reproduce that idea or work in other merchandise by using the imported merchandise. The concept of the right to reproduce relates only to the following classes of merchandise: originals or copies of artistic or scientific works; originals or copies of models and industrial drawings; model machines and prototypes; and plant and animal species.

Example.—The importer purchases a painting. By purchasing the painting, the owner possesses the right to resell, lease, or otherwise place it on display. Absent an agreement to the contrary, he does not possess the right to reproduce copies of the painting. Fees paid for the right to reproduce the painting would not be dutiable.

(i) *Exclusions from transaction value.*—The transaction value of imported merchandise does not include any of the following, if identified separately from the price actually paid or payable and from any cost or other item referred to in subsection (b):

(1) Any reasonable cost or charge that is incurred for—

(i) The construction, erection, assembly, or maintenance of, or the technical assistance provided with respect to, the merchandise after its importation into the United States; or

(ii) The transportation of the merchandise after its importation.

(2) The customs duties and other Federal taxes currently payable on the imported merchandise by reason of its importation, and any Federal excise tax on, or measured by the value of, the merchandise for which vendors in the United States ordinarily are liable.

Example.—A foreign shipper sells a piece of equipment to a U.S. buyer. The total contract price for the equipment includes technical assistance in the United States. The equipment cannot be purchased without the technical assistance, but the contract provides a breakdown of costs.

Should the appraised value include the technical assistance?

No; transaction value does not include any reasonable costs for construction, erection, assembly, maintenance of, or technical assistance, for the imported merchandise after its importation into the United States, the cost of which can be accurately identified as being separate from the price actually paid or payable for the merchandise to which they relate.

(j) *Limitations on use of transaction value.* (1) *In general.*—The transaction value of imported merchandise will be the appraised value only if—

(i) There are no restrictions on the disposition or use of the imported merchandise by the buyer, other than restrictions which are imposed or required by law, limit the geographical area in which the merchan-

dise may be resold, or do not affect substantially the value of the merchandise;

(ii) The sale of, or the price actually paid or payable for, the imported merchandise is not subject to any condition or consideration for which a value cannot be determined;

(iii) No part of the proceeds of any subsequent resale, disposal, or use of the imported merchandise by the buyer will accrue directly or indirectly to the seller, unless an appropriate adjustment can be made under subsection (b)(1)(v); and

(iv) The buyer and seller are not related, or the buyer and seller are related but the transaction value is acceptable.

(2) *Related person transactions.* (i) The transaction value between a related buyer and seller is acceptable if an examination of the circumstances of sale indicates that their relationship did not influence the price actually paid or payable, or if the transaction value of the imported merchandise closely approximates—

(A) The transaction value of identical merchandise, or of similar merchandise, in sales to unrelated buyers in the United States; or

(B) The deductive value or computed value of identical merchandise, or of similar merchandise; or

(C) The transaction value as determined in sales for exportation to the United States to unrelated buyers of merchandise that is identical in all respects to the imported merchandise but was not produced in the country in which the imported merchandise was produced, except that no two sales to unrelated buyers may be used for comparison unless the sellers are unrelated; and

(D) Each value referred to in subsections (A) (B), and (C) above that is used for comparison relates to merchandise that was exported to the United States at or about the same time as the imported merchandise.

(ii) In applying the values used for comparison, differences with respect to the sales involved will be taken into account if based on sufficient information supplied by the buyer or otherwise available to Customs and if the differences relate to—

(A) Commercial levels;

(B) Quantity levels;

(C) The costs, commissions, values, fees, and proceeds described in subsection (b) of this section; and

(D) The costs incurred by the seller in sales in which the seller and the buyer are not related that are not incurred by the seller in sales in which the seller and the buyer are related.

(k) *Restrictions and conditions on sale.*—(1) A restriction placed on the buyer of imported merchandise that does not affect substantially

its value will not prevent transaction value from being accepted as the appraised value.

Interpretative note.—A seller requires a buyer of automobiles not to sell or exhibit them before a fixed date that represents the beginning of a model year.

(2) The transaction value will not be accepted as the appraised value if the sale of, or the price actually paid or payable for, the merchandise is subject to a condition or consideration for which a value cannot be determined.

Interpretative note 1.—The seller establishes the price of the imported merchandise on condition that the buyer also will buy other merchandise in specified quantities.

Interpretative note 2.—The price of the imported merchandise is dependent upon the price or prices at which the buyer of the merchandise sells other merchandise to the seller of the merchandise.

Interpretative note 3.—The price of the imported merchandise is established on the basis of a form of payment extraneous to the merchandise, such as where the merchandise is to be further processed by the buyer, and has been provided by the seller on condition that he will receive a specified quantity of the finished merchandise.

(1) *Related buyer and seller.* (1) *Validation of transaction.*—The district director shall not disregard a transaction value solely because the buyer and seller are related. There will be related person transactions in which validation of the transaction value, using the procedures contained in section 152.103(j) (2), may not be necessary.

Interpretative note 1.—Customs may have previously examined the relationship or may already have sufficient detailed information concerning the buyer and seller to be satisfied that the relationship did not influence the price actually paid or payable. In such case, if Customs has no doubts about the acceptability of the price, the price will be accepted without requesting further information from the importer. If Customs does have doubts about the acceptability of the price and is unable to accept the transaction value without further inquiry, the importer will be given an opportunity to supply such further detailed information as may be necessary to enable Customs to examine the circumstances of the sale. In this contex Customs will examine relevant aspects of the transaction, including the way in which the buyer and seller organize their commercial relations and the way in which the price in question was arrived at in order to determine whether the relationship influenced the price.

Interpretative note 2.—If it is shown that the buyer and seller, although related, buy from and sell to each other as if they were

not related, this will demonstrate that the price has not been influenced by the relationship, and the transaction value will be accepted. If the price has been settled in a manner consistent with the normal pricing practices of the industry in question, or with the way the seller settles prices for sales to buyers who are not related to him, this will demonstrate that the price has not been influenced by the relationship.

Interpretative note 3.—If it is shown that the price is adequate to insure recovery of all costs plus a profit which is equivalent to the firm's overall profit realized over a representative period of time (e.g., on an annual basis) in sales of merchandise of the same class or kind, this would demonstrate that the price had not been influenced.

Example.—A foreign seller sells merchandise to a related U.S. importer. The foreign seller does not sell identical merchandise or similar merchandise to any unrelated parties. The transaction between the foreign seller and the U.S. importer is determined by Customs to be unaffected by the relationship. Similar merchandise is being sold at a higher price, which includes a higher percentage for profit and general expenses.

How should the merchandise be appraised?

Transaction value based on the price actually paid or payable. A transaction value between a related buyer and seller is acceptable if the relationship did not affect the price actually paid or payable.

(2) *Test values.*—(i) The importer or the buyer may demonstrate that the transaction value in a related person transaction is acceptable by showing that the value closely approximates any one of the test values provided in section 152.103(j)(2)(i). The factors that will be examined to determine if the transaction value closely approximates a test value are:

(A) The nature of the imported merchandise and the industry,

(B) The season in which the merchandise is imported,

(C) Whether the difference in value is commercially significant, and

(D) Whether the difference in value is attributable to internal transport costs in the country of exportation.

(ii) Because these factors may vary, Customs will not be able to apply a uniform standard, such as a fixed percentage, in each case. A small difference in value in a case involving one type of imported merchandise may be unacceptable, although a larger difference in a case involving another type may be acceptable, in determining if the transaction value closely approximates any of the test values. Customs will be consistent in determining if one value "closely approximates" another value. The same approach will be taken if Customs considers

a transaction value that is higher than any of the enumerated test values as will be taken if the transaction value is lower than any of the test values.

Example.—In applying any of the test values, if the transaction value in the sale under consideration is rejected because 95 does not closely approximate 100, then a transaction value for the sale of the same merchandise at 105 occurring at or about the same time likewise would have to be rejected. Similarly, if 103 were considered to closely approximate 100, a transaction value of 97 likewise would closely approximate 100.

(iii) If one of the test values provided in section 152.103(j)(2)(i) has been found to be appropriate, the district director shall not seek to determine if the relationship between the buyer and seller influenced the price. If the district director already has sufficient information to be satisfied, without further detailed inquiries, that one of the test values is appropriate, he shall not require the importer to demonstrate that the test value is appropriate.

(m) *Rejection of transaction value.*—When Customs has grounds for rejecting the transaction value declared by an importer and that rejection increases the duty liability, the district director shall inform the importer of the grounds for the rejection. The importer will be afforded 20 days to respond in writing to the district director if in disagreement. This procedure will not affect or replace the administrative ruling procedures contained in part 177 of this chapter, or any other Customs procedures.

152.104 Transaction value of identical merchandise and similar merchandise

(a) *General.*—The transaction value of identical merchandise, or of similar merchandise, is the transaction value (acceptable as the appraised value under sec. 152.103 but adjusted under par. (e) of this section) of imported merchandise that is—

(1) With respect to the merchandise being appraised, either identical merchandise or similar merchandise; and

(2) Exported to the United States at or about the time that the merchandise being appraised is exported to the United States.

(b) *Identical merchandise.*—Minor differences in appearance will not preclude otherwise conforming merchandise from being considered identical. See section 152.102(d).

(c) *Similar merchandise.*—The quality of the merchandise, its reputation, and the existence of a trademark will be factors considered to determine whether merchandise is similar. See section 152.102(i).

(d) *Commercial level and quantity.*—Transaction values determined under this section will be based on sales of identical merchandise, or similar merchandise, at the same commercial level and in substantially

the same quantity as the sales of the merchandise being appraised. If no such sale is found, sales of identical merchandise or similar merchandise, at either a different commercial level or in different quantities, or both, will be used, but adjusted to take account of that difference. Any adjustment made under this section will be based on sufficient information. See section 152.102(j). If in applying this section to any merchandise, two or more transaction values for identical merchandise, or for similar merchandise, are determined, the merchandise will be appraised on the basis of the lower or lowest of those values.

(e) *Adjustments.*—Adjustments for identical merchandise or similar merchandise, because of different commercial levels or quantities, or both, whether leading to an increase or decrease in the value, will be made only on the basis of sufficient information; e.g., valid price lists containing prices referring to different levels or quantities.

Interpretative note.—If the imported merchandise being valued consists of a shipment of 10 units and the only identical imported merchandise for which a transaction value exists involved a sale of 500 units, and it is recognized that the seller grants quantity discounts, the required adjustment may be accomplished by resorting to the seller's price list and using that price applicable to a sale of 10 units. This does not require that a sale had to have been made in quantities of 10 as long as the price list has been established as being bona fide through sales at other quantities. In the absence of such an objective measure, however, the determination of a Customs value under the provisions for transaction value of identical or similar merchandise is not appropriate.

152.105 Deductive value

(a) *Merchandise concerned.*—For the purposes of deductive value, merchandise concerned means the merchandise being appraised, identical merchandise, or similar merchandise.

(b) *Merchandise of the same class or kind.*—For the purposes of deductive value, merchandise of the same class or kind includes merchandise imported from the same country as well as other countries as the merchandise being appraised.

(c) *Prices.*—The deductive value of the merchandise being appraised is whichever of the following prices (as adjusted under subsec. (d)) is appropriate depending upon when and in what condition the merchandise concerned is sold in the United States:

(1) If the merchandise concerned is sold in the condition as imported at or about the date of importation of the merchandise being appraised, the price is the unit price at which the merchandise concerned is sold in the greatest aggregate quantity at or about such date.

(2) If the merchandise concerned is sold in the condition as imported

but not sold at or about the date of importation of the merchandise being appraised, the price is the unit price at which the merchandise concerned is sold in the greatest aggregate quantity after the date of importation of the merchandise being appraised but before the close of the 90th day after the date of such importation.

(3) If the merchandise concerned was not sold in the condition as imported and not sold before the close of the 90th day after the date of importation of the merchandise being appraised, the price is the unit price at which the merchandise being appraised, after further processing, is sold in the greatest aggregate quantity before the 180th day after the date of such importation. This provision will apply to appraisement of merchandise only if the importer so elects at the time of filing the entry summary.

(d) *Deductions from price.*—The price determined under subsection (c) will be reduced by an amount equal to—

(1) Any commission usually paid or agreed to be paid, or the addition usually made for profit and general expenses, in connection with sales in the United States of imported merchandise that is of the same class or kind, regardless of the country of exportation, as the merchandise concerned;

(2) The actual costs and associated costs of transportation and insurance incurred with respect to international shipments of the merchandise concerned from the country of exportation to the United States;

(3) The usual costs and associated costs of transportation and insurance incurred with respect to shipments of the merchandise concerned from the place of importation to the place of delivery in the United States, if those costs are not included as a general expense under subsection (1);

(4) The Customs duties and other Federal taxes currently payable on the merchandise concerned by reason of its importation, and any Federal excise tax on, or measured by the value of, the merchandise for which vendors in the United States ordinarily are liable; and

(5) But only in the case of price determined under subsection (c) (3), the value added by the processing of the merchandise after importation to the extent that the value is based on sufficient information relating to the cost of that processing.

(e) *Profit and general expenses; special rules.*—(1) The deduction made for profit and general expenses (taken as a whole) will be based upon the importer's profit and general expenses, unless the profit and general expenses are inconsistent with those reflected in sales in the United States of imported merchandise of the same class or kind from all countries, in which case the deduction will be based on the usual profit and general expenses reflected in those sales, as determined from

sufficient information. Any State or local tax imposed on the importer with respect to the sale of imported merchandise will be treated as a general expense.

(2) In determining deductions for commissions and usual profit and general expenses, sales in the United States of the narrowest group or range of imported merchandise of the same class or kind, including the merchandise being appraised, for which sufficient information can be provided, will be examined.

(f) *Packing costs.*—The price determined under subsection (c) will be increased, but only to the extent that the costs are not otherwise included, by an amount equal to the packing costs incurred by the importer or the buyer with respect to the merchandise concerned.

(g) *Assists.*—For purposes of determining deductive value, any sale to a person who supplies any assist for use in connection with the production or sale for export of the merchandise concerned will be disregarded.

(h) *Unit price in greatest aggregate quantity.*—The unit price will be established after a sufficient number of units have been sold to an unrelated person. The unit price to be used when the units have been sold in different quantities will be that at which the total volume sold is greater than the total volume sold at any other unit price.

Interpretative note 1.—Merchandise is sold to an unrelated person from a price list which grants favorable unit prices for purchases made in larger quantities:

Sale quantity	Unit price	Number of sales	Total quantity sold at each price
1 to 10 units	$100	10 sales of 5 units	65
		5 sales of 3 units	
11 to 25 units	95	5 sales of 11 units	55
over 25 units	90	1 sale of 30 units	80
		1 sale of 50 units	

The greatest number of units sold at a price is 80; therefore, the unit price in the greatest aggregate quantity is $90.

Interpretative note 2.—Two sales to unrelated persons occur: In the first sale, 500 units are sold at a price of $95 each; in the second sale, 400 units are sold at a price of $90 each. In this example, the greatest number of units sold at a particular price is 500; therefore, the unit price in the greatest aggregate quantity is $95.

Interpretative note 3.—Various quantities are sold to unrelated persons at various prices:

(a) *Sales*—

Sale quantity:	*Unit price*
40 units	$100
30 units	90
15 units	100
50 units	95
25 units	105
35 units	90
5 units	100

(b) *Totals.*—

Total quantity sold:	*Unit price*
65	$90
50	95
60	100
25	105

In this example, the greatest number of units sold at a particular price is 65; therefore, the unit price in the greatest aggregate quantity is $90.

(i) *Further processing.* (1) *Quantified data.*—If merchandise has undergone further processing after its importation into the United States and the importer elects the method specified in subsection (c)(3), deductions made for the value added by that processing will be based on objective and quantifiable data relating to the cost of the work performed. Accepted industry formulas, recipes, methods of construction, and other industry practices would form the basis for the deduction. That deduction also will reflect amounts for spoilage, waste, or scrap derived from the further processing.

(2) *Loss of identity.*—If the imported merchandise loses its identity as a result of further processing, the method specified in subsection (c)(3) will not be applicable unless the value added by the processing can be determined accurately without unreasonable difficulty for either importers or Customs. If the imported merchandise maintains its identity but forms a minor element of the merchandise sold in the United States, the use of subsection (c)(3) will be unjustified. The district director shall review each case involving these issues on its merits.

Example.—A foreign shipper sells merchandise to a related U.S. importer. The foreign shipper does not sell to any unrelated person. The transaction between the foreign shipper and the U.S. importer is determined to have been affected by the relationship. There is no identical or similar merchandise from the same country of production. The U.S. importer further processes the product and sells the finished product to an unrelated buyer in the United States within 180 days of the date of importation. No assists from

the unrelated U.S. buyer are involved, and the type of processing involved can be accurately costed.

How should the merchandise be appraised?

The merchandise should be appraised under deductive value with allowances for profit and general expenses, freight and insurance, duties and taxes, and the cost of processing.

152.106 Computed value

(a) *Elements.*—The computed value of imported merchandise is the sum of—

(1) The cost or value of the materials and the fabrication and other processing of any kind employed in the production of the imported merchandise;

(2) An amount for profit and general expenses equal to that usually reflected in sales of merchandise of the same class or kind as the imported merchandise that are made by the producers in the country of exportation for export to the United States;

(3) Any assist, if its value is not included under subsection (1) or (2); and

(4) The packing costs.

(b) *Special rules.*—(1) The cost or value of materials under subsection (a)(1) will not include the amount of any internal tax imposed by the country of exportation that is directly applicable to the materials or their disposition if the tax is remitted or refunded upon the exportation of the merchandise in the production of which the materials were used.

(2) The amount for profit and general expenses under subsection (a)(2) will be based upon the producer's profit and general expenses, unless the producer's profit and general expenses are inconsistent with those usually reflected in sales of merchandise of the same class or kind as the imported merchandise that are made by producers in the country of exportation for export to the United States. In that case, the amount under subsection (a) (2) will be based on the usual profit and general expenses of such producers in those sales, as determined from sufficient information. See section 152.102(j).

(c) *Profit and general expenses.*—The amount for profit and general expenses will be taken as a whole. If the producer's profit figure is low and general expenses high, those figures taken together nevertheless may be consistent with those usually reflected in sales of imported merchandise of the same class or kind.

Interpretative note 1.—A product is introduced into the United States, and the producer accepts either no profit or a low profit to offset the high general expenses required to introduce the product into this market. If the producer can demonstrate that there is a

low profit on sales of the imported merchandise because of peculiar commercial circumstance, the actual profit figures will be accepted provided the producer has valid commercial reasons to justify them and his pricing policy reflects the usual pricing policies in the industry.

Interpretative note 2.—Producers have been forced to lower prices temporarily because of an unforeseeable drop in demand, or they sell merchandise to complement a range of merchandise being produced in the United States and accept a low profit to maintain competitiveness. If the producer's own figures for profit and general expenses are not consistent with those usually reflected in sales of merchandise of the same class or kind as the merchandise being valued which are made in the country of exportation for export to the United States, the amount for profit and general expenses will be based upon reliable and quantifiable information other than that supplied by or on behalf of the producer of the merchandise.

(d) *Assists and packing costs.*—Computed value also will include an amount equal to the apportioned value of any assists used in the production of the imported merchandise and the packing costs for the imported merchandise. The value of any engineering, development, artwork, design work, and plans and sketches undertaken in the United States will be included in computed value only to the extent that their value has been charged to the producer. Depending on the producer's method of accounting, the value of assists may be included (duplicated) in the producer's cost of materials, fabrication, and other processing, or in the general expenses. If duplication occurs, a separate amount for the value of the assists will not be added to the other elements as it is not intended that any component of computed value be included twice.

(e) *Merchandise of same class or kind.*—Sales for export to the United States of the narrowest group or range of imported merchandise, including the merchandise being appraised, will be examined to determine usual profit and general expenses. For the purpose of computed value, merchandise of the same class or kind must be from the same country as the merchandise being appraised

Example.—A foreign shipper sells merchandise to a related U.S. importer. The foreign shipper does not sell to any unrelated persons. The transaction between the foreign shipper and the U.S. importer is determined to have been affected by the relationship. There is no identical or similar merchandise from the same country of production. The U.S. importer further processes the product and sells the finished product to an unrelated buyer in the United States within 180 days of the date of importation. No assists

from the unrelated U.S. buyer are involved, and the type of processing involved can be accurately costed. The U.S. importer has requested that the shipment be appraised under computed value. The profit and general expenses figure for the same class or kind of merchandise in the country of exportation for export to the United States is known.

How should the merchandise be appraised?

The merchandise should be appraised under computed value, using the company's profit and general expenses if not inconsistent with those usually reflected in sales of merchandise of the same class or kind.

(f) *Availability of information.* (1) It will be presumed that the computed value of the imported merchandise cannot be determined if—

(i) The importer is unable to provide required computed value information within a reasonable time, and/or

(ii) The foreign producer refuses to provide, or is legally prevented from providing, that information.

(2) If information other than that supplied by or on behalf of the producer is used to determine computed value, the district director shall inform the importer, upon written request, of:

(i) The source of the information,

(ii) The data used, and

(iii) The calculation based upon the specified data if not contrary to domestic law regarding disclosure of information. See also section 152.101(d).

152.107 Value if other values cannot be determined or used

(a) *Reasonable adjustments.*—If the value of imported merchandise cannot be determined or otherwise used for the purposes of this subpart, the imported merchandise will be appraised on the basis of a value derived from the methods set forth in sections 152.103 through 152.106, reasonably adjusted to the extent necessary to arrive at a value. Only information available in the United States will be used.

(b) *Identical merchandise or similar merchandise.*—The requirement that identical merchandise, or similar merchandise, should be exported at or about the same time of exportation as the merchandise being appraised may be interpreted flexibly. Identical merchandise, or similar merchandise, produced in any country other than the country of exportation or production of the merchandise being appraised may be the basis for customs valuation. Customs values of identical merchandise, or similar merchandise, already determined on the basis of deductive value or computed value may be used.

(c) *Deductive value.*—The 90 days requirement for the sale of mer-

chandise referred to in section 152.105(c) may be administered flexibly.

152.108 Unacceptable bases of appraisement.

For the purposes of this subpart, imported merchandise may not be appraised on the basis of—

(1) The selling price in the United States of merchandise produced in the United States;

(2) A system that provides for the appraisement of imported merchandise at the higher of two alternative values;

(3) The price of merchandise in the domestic market of the country of exportation;

(4) A cost of production, other than a value determined under section 152.106 for merchandise that is identical merchandise, or similar merchandise, to the merchandise being appraised;

(5) The price of merchandise for export to a country other than the United States;

(6) Minimum values for appraisement; or

(7) arbitrary or fictitious values.

R. E. CHASEN
Commissioner of Customs.

Approved: March 20, 1980.
JOHN P. SIMPSON
(for Assistant Secretary of the Treasury).

[Published in the Federal Register, Mar. 31, 1980 (45 F.R. 20912)]

Performance Review Boards; Appointment of Members

AGENCY: U.S. Customs Service, Department of the Treasury.

ACTION: General notice.

SUMMARY: This notice announces the appointment of the members of the U.S. Customs Service Performance Review Boards (PRB's) in accordance with 5 U.S.C. 4313(c)(4). The purpose of the PRB's is to review senior executive employees' performance and make recommendations regarding performance and performance awards.

DATE: The Performance Review Boards become effective on March 28, 1980.

FOR FURTHER INFORMATION CONTACT: Alexander Faison, Director, Office of Human Resources, U.S. Customs Service, 1301 Constitution Avenue NW., room 3417, Washington, D.C.; 202–566–5563.

SUPPLEMENTARY INFORMATION: There are two Performance Review Boards in the U.S. Customs Service as follows:

1. The Performance Review Board to review senior executives rated by the Commissioner and Deputy Commissioner (i.e., the Assistant to the Commissioner, the Special Assistants to the Commissioner, the Assistant Commissioners, and Regional Commissioners) is composed of the following members:

George C. Corcoran, Jr., Assistant Commissioner, Office of Management Integrity, U.S. Customs Service.

Arthur D. Kallen, Director, Office of Budget and Program Analysis, Department of the Treasury.

John Mangels, Director, Office of Operations, Department of the Treasury.

William Rhodes, Director, Office of Management and Organization, Department of the Treasury.

Myron Weinstein, Deputy Director, U.S. Secret Service.

2. The Performance Review Board to review all other Senior Executives is composed of the following members:

Charles C. Hackett, Assistant Commissioner (Border Operations) U.S. Customs Service.

Alfred R. De Angelus, Assistant Commissioner (Commercial Operations), U.S. Customs Service.

Jack T. Lacy, Comptroller, U.S. Customs Service.

William J. Griffin, Regional Commissioner, U.S. Customs Service, 100 Summer Street, Boston, Mass. 02110.

Dennis T. Snyder, Regional Commissioner, U.S. Customs Service, 6 World Trade Center, New York, N.Y. 10048.

John A. Hurley, Regional Commissioner, U.S. Customs Service, 40 South Gay Street, Baltimore, Md. 21202.

Robert N. Battard, Regional Commissioner, U.S. Customs Service, 99 SE. Fifth Street, Miami, Fla. 33131.

Peter J. Dispenzirie, Acting Regional Commissioner, U.S. Customs Service, 1440 Canal Street, New Orleans, La. 70112.

Donald Kelly, Acting Regional Commissioner, U.S. Customs Service, 500 Dallas Street, Houston, Tex. 77002.

Albert G. Bergesen, Regional Commissioner, U.S. Customs Service, 300 North Los Angeles Street, Los Angeles, Calif. 90053.

Edward M. Ellis, Acting Regional Commissioner, U.S. Customs Service, 211 Main Street, San Francisco, Calif. 94105.

Eugene H. Mach, Acting Regional Commissioner, U.S. Customs Service, 55 East Monroe Street, Chicago, Ill. 60603.

Dated: March 24, 1980.

ROBERT E. CHASEN,
Commissioner of Customs.

(521741)

American Manufacturer's Petition

Extension of time for comments concerning an American manufacturer's petition to reclassify certain footwear known as moon boots

AGENCY: U.S. Customs Service, Department of the Treasury.

ACTION: Notice of extension of time for comments.

SUMMARY: This notice extends the period of time permitted for the submission of comments in response to a recent American manufacturer's petition to the Customs Service to reclassify certain footwear known as moon boots. This extension will permit the preparation and submission of more detailed comments by interested members of the public.

DATES: Comments must be received on or before April 30, 1980.

ADDRESS: Comments, preferably in triplicate, should be addressed to the Commissioner of Customs, attention: Regulations and Research Division, room 2335, U.S. Customs Service, 1301 Constitution Avenue NW., Washington, D.C. 20229.

FOR FURTHER INFORMATION CONTACT: Donald F. Cahill, Classification and Value Division, U.S. Customs Service, 1301 Constitution Avenue NW., Washington, D.C. 20229; 202-566-8181.

SUPPLEMENTARY INFORMATION:

BACKGROUND

On January 30, 1980, the Customs Service published in the Federal Register (45 F.R. 6881) a notice of receipt of an American manufacturer's petition, filed under section 516 of the Tariff Act of 1930, as amended (19 U.S.C. 1516), requesting that certain footwear known as moon boots be reclassified as other footwear which is over 50 percent by weight of rubber or plastics under item 700.60, Tariff Schedules of the United States (TSUS), or in the alternative, as other protective footwear under item 700.53, TSUS. It is currently the position of Customs that the particular moon boots in question, as well as footwear of the same class or kind, are classifiable as other footwear which is over 50 percent by weight of rubber or plastics and having uppers of which over 90 percent of the exterior surface area is rubber or plastics under item 700.58, TSUS.

COMMENTS

Comments concerning the American manufacturer's petition were to have been received on or before March 31, 1980. However, the Customs Service has been requested to extend the period of time for the submission of comments in order to allow additional time for the

preparation of a response to the American manufacturer's petition. As a result, the period of time for the submission of comments is extended to April 30, 1980.

Dated: March 19, 1980.

SALVATORE E. CARAMAGNO
(For the Director, Office of
Regulations and Rulings).

[Published in the Federal Register, Mar. 25, 1980 (45 F.R. 19420)]

(TMK-2-RRUEE)

Notice of Application for Recordation of Trade Name Houseworks, Ltd.

Application has been filed pursuant to section 133.12, Customs Regulations (19 C.F.R. 133.12), for recordation under section 42 of the act of July 5, 1946, as amended (15 U.S.C. 1124), of the trade name Houseworks, Ltd. used by Houseworks, Ltd., a corporation organized under the laws of the State of Georgia, located at 3937 Oakcliff Industrial Court, Atlanta, Ga. 30340.

The application states that the trade name is associated with dollhouse accessories and miniature furniture.

The application states further that various firms located in Canada, England, West Germany, France, and Switzerland are authorized to sell merchandise bearing the trade name. Appropriate accompanying papers were submitted with the application.

Before final action is taken on the application, consideration will be given to any relevant data, views, or arguments submitted in writing by any person in opposition to the recordation of this trade name. Any such submission should be addressed to the Commissioner of Customs, Washington, D.C. 20229, in time to be received not later than 30 days from the date of publication of this notice in the Federal Register.

Notice of the action taken on the application for recordation of the trade name will be published in the Federal Register.

Dated: March 19, 1980.

SALVATORE E. CARAMAGNO,
Acting Director, Office of
Regulations and Rulings.

Decisions of the United States Customs Court

United States Customs Court
One Federal Plaza
New York, N.Y. 10007

Chief Judge

Edward D. Re

Judges

Paul P. Rao
Morgan Ford
Scovel Richardson
Frederick Landis
James L. Watson
Herbert N. Maletz
Bernard Newman
Nils A. Boe

Senior Judge

Samuel M. Rosenstein

Clerk

Joseph E. Lombardi

Customs Decision

(C.D. 4847)

RSMC INC., PLAINTIFF *v.* UNITED STATES, DEFENDANT

Court No. 77-4-00572

[Judgment for defendant.]

(Decided March 12, 1980)

Doherty and Melahn (*William E. Melahn* at the trial and on the briefs) for the plaintiff.

Alice Daniel, Acting Assistant Attorney General; *Joseph I. Liebman*, Attorney

in Charge, Field Office for Customs Litigation (*Saul Davis* at the trial and on the brief), for the defendant.

MALETZ, Judge: The problem in this case is to determine the proper tariff classifications of items invoiced as "E–22 champagne goblets" that were exported from Spain and entered at the port of Boston in April and May 1973.

The merchandise was classified by Customs under item 653.75, TSUS, as articles of metal, coated or plated with gold, and assessed duty at the rate of 20 percent ad valorem. Plaintiff claims the merchandise is properly classifiable under item 653.80, TSUS, as articles of metal, coated or plated with silver, dutiable at the lesser rate of 8.5 percent ad valorem.

THE STATUTES

Schedule 6, part 3, subpart F, TSUS

Articles not specially provided for of a type used for household, table, or kitchen use; * * * all the foregoing and parts thereof, of metal:

* * * * * * *

Classified under:

653.75 Coated or plated with gold 20%

Claimed under:

653.80 Coated or plated with silver 8.5%

General interpretative rules:

10(c) An imported article which is described in two or more provisions of the schedules is classifiable in the provision which most specifically describes it; but, in applying this rule of interpretation, the following considerations shall govern:

* * * * * * *

(ii) comparisons are to be made only between provisions of coordinate or equal status, i.e., between the primary or main superior headings of the schedules or between coordinate inferior headings which are subordinate to the same superior heading;

10(d) If two or more tariff descriptions are equally applicable to an article, such article shall be subject to duty under the description for which the original statutory rate is highest, and, should the highest original statutory rate be applicable to two or more of such descriptions, the article shall be subject to duty under that one of such descriptions which first appears in the schedules; * * *

QUESTION PRESENTED

The question to be decided is whether the imported goblets are classifiable as articles coated or plated with gold or as articles coated or plated with silver.

THE FACTS

The goblets in question are 6½ inches in height, have a bowl diameter of 4 inches, and are silver in color save for the interior of the bowl which

is gold in color. Each base goblet was formed out of an alloy that was then plated with nickel over the entire surface. The entire surface of the base goblet was then coated or plated with silver following which the inside of the bowl was coated or plated with gold.

The thickness of the gold layer averages 0.72 millionths of an inch, while the thickness of the silver layer averages 0.99 millionths of an inch. The weight of the gold layer is approximately 8 millionths of a pound, while the weight of the silver layer is approximately 17 millionths of a pound so that the silver weighs about twice as much as the gold. The total surface area of the gold layer is 16 square inches, while the total surface of the silver layer layer amounts to approximately 45 square inches. Hence, the goblet contains almost three times as much silver area as gold area. However, based on the average price of gold and silver in the United States in 1973, the gold portion of the goblet was worth 10 times as much as the silver portion.

In 1957, the Federal Trade Commission adopted a regulation prescribing trade practice rules governing the sales or offers for sale of jewelry articles. This regulation reads as follows (16 CFR 23.22):

§ *23.22 Misrepresentation as to gold content*

(a) It is an unfair trade practice to sell or offer for sale any industry product under any trade or product name or designation or other representation having the capacity and tendency or effect of deceiving purchasers or prospective purchasers thereof as to the presence of gold or gold alloy in the product, or as to the quantity or fineness of gold alloy, contained in the product, or as to the fineness, thickness, weight ratio, or manner of application of any gold or gold alloy plating, covering, or coating on any surface of any industry product or part thereof.

(b) The following practices are among those to be regarded as inhibited by paragraph (a) of this section:

* * * * * * *

(5) Use of the term "gold electroplate," or "gold electroplated," as descriptive of any industry product or part thereof, unless such product or part is plated or coated with gold or a gold alloy and such plating or coating is of such karat fineness, thickness, and extent of surface coverage that the use of the term will not have the capacity and tendency of deceiving purchasers or prospective purchasers.

* * * * * * *

(c) Markings and descriptions of industry products or parts thereof will be considered as meeting the requirements of this section when in conformity with the following:

* * * * * * *

(3) An industry product or part thereof, all significant surfaces on which there has been affixed by an electrolytic process a coating or plating of gold, or of a gold alloy of not less than 10 carat fineness, the minimum thickness throughout of which is equivalent to 7 millionths of an inch of *fine gold*, may be marked

or described as "gold electroplate" or "gold electroplated." When the coating or plating meets the minimum fineness, but not the minimum thickness, above specified, the marking or description may be "gold flashed " or "gold washed," * * *

With respect to the goblets here in issue, the thickness of the gold surface of the interior of the bowl, as noted before, is only 0.72 millionths of an inch and therefore is only 10 percent of the minimum 7 millionths of an inch thickness required by the FTC regulation before an article may be represented as "gold electroplate" or "gold electroplated." Because the thickness of the gold covering is only 0.72 millionths of an inch, the imported goblets may not under this FTC rule be represented to the public as "gold electroplated" but may be represented as "gold flashed" or "gold washed." In that circumstance, goblets such as those involved here were represented in 1973 by plaintiff for sale to the public as "silver plated toasting goblets * * * with gold color lining." Competitors of plaintiff advertised similar goblets variously as "toasting goblets * * * gold lined"; "toasting goblets * * * gilt lined";[1] or "silver goblets with gold flashed bowls."

In correspondence between plaintiff and its supplier in Spain during the period 1969–71, the imported goblets were consistently referred to as "gold plated." Also plaintiff's own inventory list described the importations as "champagne goblet goldplated interior." In addition, the goblets were referred to as "gold plated" by concerns engaged in electroplating them.

Opinion

With these facts in mind, there is no question that the imported goblets are coated or plated with gold within the common meaning of item 653.75. Indeed, the sole criterion used by our appellate court in determining whether an article is classifiable under a tariff provision requiring the article to be "plated with gold" was whether the article, in fact, contained a gold plating and whether the gold plating was more than an "insignificant" or "neglibible" portion of the article. *Saji & Kariya Co.* v. *United States*, 9 Ct. Cust. Appls. 78, T.D. 37945 (1919); *United States* v. *N. Shure Co.*, 21 CCPA 296, T.D. 46818 (1933); *Tuska* v. *United States*, 5 Ct. Cust. Appls. 506, T.D. 35153 (1915). And in the present case, there is no dispute that the imported goblet was coated or plated with gold on the inside of the bowl and that this gold plating was more than insignificant or neglibible.

Plaintiff argues, however, that the term "coated or plated with gold" has had by reason of adoption of a Federal Trade Commission

[1] Webster's Third International Dictionary (1963 ed.) defines the adjective "gilt" as "covered with gold or gilt." The noun "gilt" in turn is defined in Webster's as "*gold, or that which resembles gold, laid on the surface of a thing.*"

regulation in 1957 a commercial designation different from its common meaning which precludes the articles here in issue from being classified as gold coated or plated.[2] Put otherwise, plaintiff's claim is (1) that the effect of the 1957 FTC regulation was to establish a commercial designation for gold coated or plated articles which prescribes a minimum thickness requirement that must be met before an article may be represented as gold coated or plated; and (2) that since the articles here in issue did not contain this minimum thickness, the articles are not classifiable as gold coated or plated.

It is, of course, basic that the common and commercial meaning of tariff terms are presumed to be the same and the party who asserts that a tariff term has a meaning in the trade and commerce of the United States which is different from its common meaning has the burden of proof. This rule of commercial designation "was intended to apply to cases where the trade designation is so universal and well understood that the Congress and all the trade are supposed to have been fully acquainted with the practice at the time the law was enacted." *Jas. Akeroyd & Co.* v. *United States*, 15 Ct. Cust. Appls. 440, 443, T.D. 42641 (1928). Thus, "(c)ommercial designation must be the result of established usage in commerce and trade and must be definite, uniform, and general, and not local, partial, or personal. * * * Before the plain understanding of a term can be deviated from, it must be shown by plenary proof to have a different import in trade and commerce which is fully and completely understood and accepted throughout the United States by all those dealing wholesale in that class of goods. * * *." Sturm, *A Manual of Customs Law* (1974), page 210.

In this setting, the court concludes for the reasons that follow that plaintiff's reliance on the FTC regulation is misplaced, and that in any event plaintiff failed to prove a commercial designation that would preclude classification under item 653.75.

First, there is no indication anywhere in the legislative history of the TSUS, in general, or item 653.75 and its superior heading, in particular, which would disclose that Congress intended that the FTC regulation would be determinative of the scope of any provision in the TSUS. See, e.g., *A. N. Deringer, Inc.* v. *United States*, 63 CCPA 37, 42, C.A.D. 1161, 524 F. 2d 1215, 1220 (1975).

Second, the TSUS does not distinguish between "coated or plated with gold" and "coated or plated with silver" (items 653.75 and 653.80) except for the precious metal utilized. The FTC regulation,

[2] A descriptive term, as well as an eo nomine designation, in a tariff act is susceptible of proof of commercial designation unless it was the intent of Congress to restrict the meaning of the term used to its common meaning. *La Manna, Azema & Farnan* v. *United States*, 14 Ct. Cust. Appls. 289, 292, T.D. 41908 (1926); *American Express Co.* v. *United States*, 10 Ct. Cust. Appls. 275, 279, T.D. 38680 (1920); *United States* v. *Iwai & Co., Ltd.*, 29 CCPA 60, 62, C.A.D. 171 (1941).

on the other hand, distinguishes between silver plated articles and gold plated articles by prescribing a thickness requirement for gold plating and not prescribing a thickness requirement for silver plating. Clearly, Congress did not adopt the FTC provision regarding plating since the TSUS contains no thickness requirements for either gold or silver.

What is more, the fact that under the FTC regulation certain requirements must be met before articles may be offered as gold plated does not ipso facto establish a commercial designation for the terms gold coating or plating. Proof must still be presented by plaintiff to show that such requirements were fully and completely understood and accepted by all those dealing in wholesale in that class of goods and that such requirements were definite, uniform, and general. Plaintiff, however, has failed to satisfy its burden in this respect.

For one thing, the record is clear that the change mandated by the FTC regulation did not become definite, uniform, and general in the trade. For example, in the period immediately antedating the importations at issue, plaintiff itself and its foreign supplier consistently referred to the imported goblets as "gold plated." Also, the trade advertised goblets similar to those involved here as "silver goblets with gold flashed bowls" or as "toasting goblets * * * gilt lined"—and these are simply other ways of referring to the articles as coated with gold. Further, electroplaters within the trade have consistently referred to articles such as the ones involved here as "gold plated." Thus, in the last analysis, plaintiff has failed to prove a uniform and recognized commercial designation that precludes classification such as the importations at bar from the status of "coated or plated with gold."

Plaintiff next argues that the rule of "relative specificity," contained in General Interpretative Rule 10(c), controls the competition between item 653.75 (which covers articles coated or plated with gold), and item 653.80 (which covers articles coated or plated with silver), and that item 653.80 is more specific. However, for the reasons set out below, it is concluded that both provisions are equally specific and that General Interpretative Rule 10(d) therefore applies.

Under the rule of "relative specificity" of tariff provisions as contained in General Interpretative Rule 10(c), where there is competition between two or more tariff provisions for classification of a particular article, and both tariff provisions encompass that article, it is the provision whose requirements are more difficult to fulfill which controls classification. See *Humphreys* v. *United States*, 56 CCPA 67, 69, 71, C.A.D. 956, 407 F. 2d 417, 419, 420 (1969).

Clearly, the particular terms of the tariff provisions in issue are measured for relative specificity rather than the composition of the merchandise in issue. With this basic rule in mind, examination of

the two provisions involved (items 653.75 and 653.80) discloses that they are identical except for the particular precious metal used as the plating material. Therefore, it is apparent that General Interpretative Rule 10(c) does not resolve the classification issue since the requirements of both items 653.75 and 653.80 are equally difficult to fulfill.

Accordingly, General Interpretative Rule 10(d) controls for the reason that items 653.75 and 653.80, TSUS, are "equally applicable" to the imported goblets inasmuch as the goblets are "coated or plated" with both gold and silver.

In this circumstance, General Interpretative Rule 10(d) mandates classification under the provisions which contain the highest original statutory rate of duty (the col. 2 rate). And since item 653.75 applies the highest original statutory rate of duty (65 percent versus 50 percent for item 653.80), General Interpretative Rule 10(d) requires classification under item 653.75.

For the foregoing reasons, the classification under item 653.75 is affirmed and the action is hereby dismissed.

Decisions of the United States Customs Court

Abstracts

Abstracted Reappraisement Decisions

DEPARTMENT OF THE TREASURY, *March 17, 1980.*

The following abstracts of decisions of the United States Customs Court at New York are published for the information and guidance of officers of the customs and others concerned. Although the decisions are not of sufficient general interest to print in full, the summary herein given will be of assistance to customs officials in easily locating cases and tracing important facts.

ROBERT E. CHASEN,
Commissioner of Customs.

DECISION NUMBER	JUDGE & DATE OF DECISION	PLAINTIFF	COURT NO.	BASIS OF VALUATION	HELD VALUE	BASIS	PORT OF ENTRY AND MERCHANDISE
R80/36	Rao, J. March 12, 1980	Imported Rug Associates, Ltd.	R58/10923, etc.	Export value	Appraised unit values less 7.5%, net packed	Agreed statement of facts	New York Rugs
R80/37	Rao, J. March 12, 1980	Imported Rug Associates, Ltd.	R64/3927, etc.	Export value	F.o.b. unit invoice prices plus 20% of difference between f.o.b. unit invoice prices and appraised values	Agreed statement of facts	New York Rugs

DECISION NUMBER	JUDGE & DATE OF DECISION	PLAINTIFF	COURT NO.	BASIS OF VALUATION	HELD VALUE	BASIS	PORT OF ENTRY AND MERCHANDISE
R80/38	Rao, J. March 12, 1980	Imported Rug Associates, Ltd.	R64/4177, etc.	Export value	F.o.b. unit invoice prices plus 20% of difference between f.o.b. unit invoice prices and appraised values	Agreed statement of facts	New York Rugs
R80/39	Rao, J. March 13, 1980	Imported Rug Associates, Ltd.	R63/986, etc.	Export value	F.o.b. unit invoice prices plus 20% of difference between f.o.b. unit invoice pric s and appraised values	Agreed statement of facts	New York Rugs
R80/40	Watson, J. March 13, 1980	Ciba Chemical and Dye Company	R66/18301	United States value	U.S. selling prices, less 1% cash discount as determined by customs officer at time of appraisement; less 24.2% representing profit and general expenses usually made in U.S. on sales of dyestuffs of same class or kind; less costs of transportation and insurance from place of shipment to place of delivery in amounts determined by cus-	U.S. v. Geigy Chemical Corporation et al. (C.A.D. 1155)	New York Benzenoid dyestuffs

					toms officer at time of appraisement; divided by 1.40 or such other factor applied by customs officer, to allow for customs duties payable on imported dyestuffs		
R80/41	Watson, J. March 13, 1980	Ciba Chemical and Dye Company	R66/23888, etc.	United States value	U.S. selling prices, less 1% cash discount as determined by customs officer at time of appraisement; less 33.4% representing profit and general expenses usually made in U.S. on sales of dyestuffs of same class or kind; less costs of transportation and insurance from place of shipment to place of delivery in amounts determined by customs officer at time of appraisement; divided by 1.40 or such other factor applied by customs officer, to allow for customs duties payable on imported dyestuffs	U.S. v. Geigy Chemical Corporation et al. (C.A.D. 1155)	New York Benzenoid dyestuffs

DECISION NUMBER	JUDGE & DATE OF DECISION	PLAINTIFF	COURT NO.	BASIS OF VALUATION	HELD VALUE	BASIS	PORT OF ENTRY AND MERCHANDISE
R80/42	Watson, J. March 13, 1980	Ciba Chemical and Dye Company	R67/9114	United States value	U.S. selling prices, less 1% cash discount as determined by customs officer at time of appraisement; less 25.5% representing profit and general expenses usually made in U.S. on sales of dyestuffs of same class or kind; less costs of transportation and insurance from place of shipment to place of delivery in amounts determined by customs officer at time of appraisement; divided by 1.40 or such other factor applied by customs officer, to allow for customs duties payable on imported dyestuffs	U.S. v. Geigy Chemical Corporation et al. (C.A.D. 1155)	New York Benzenoid dyestuffs
R80/43	Watson, J. March 13, 1980	Ciba Chemical and Dye Company	R69/11527 etc.	United States value	U.S. selling prices, less 1% cash discount as determined by customs officer at time of appraisement; less 31.1% representing profit and general expenses usually made in U.S. on sales of dye-	U.S. v. Geigy Chemical Corporation et al. (C.A.D. 1155)	New York Benzenoid dyestuffs

					stuffs of same class or kind; less costs of transportation and insurance from place of shipment to place of delivery in amounts determined by customs officer at time of appraisement; divided by 1.32 or such other factor applied by customs officer, to allow for customs duties payable on imported dyestuffs		
R80/44	Watson, J. March 13, 1980	Geigy Chemical Corporation	R66/16348, etc.	United States value	U.S. selling prices, less 1% cash discount as determined by customs officer at time of appraisement; less 25.5% representing profit and general expenses usually made in U.S. on sales of dyestuffs of same class or kind; less costs of transportation and insurance from place of shipment to place of delivery in amounts determined by customs officer at time of appraisement; divided by 1.40 or such other factor applied by customs officer, to allow for customs duties payable on imported dyestuffs	U.S. v. Geigy Chemical Corporation et al. (C.A.D. 1155)	New York Benzenoid dyestuffs

DECISION NUMBER	JUDGE & DATE OF DECISION	PLAINTIFF	COURT NO.	BASIS OF VALUATION	HELD VALUE	BASIS	PORT OF ENTRY AND MERCHANDISE
R80/45	Watson, J. March 13, 1980	Geigy Chemical Corporation	R66/16980	United States value	U.S. selling prices, less 1% cash discount as determined by customs officer at time of appraisement; less 25.7% representing profit and general expenses usually made in U.S. on sales of dyestuffs of same class or kind; less costs of transportation and insurance from place of shipment to place of delivery in amounts determined by customs officer at time of appraisement; divided by 1.40 or such other factor applied by customs officer, to allow for customs duties payable on imported dyestuffs	U.S. v. Geigy Chemical Corporation et al. (C.A.D. 1155)	New York Benzenoid dyestuffs
R80/46	Watson, J. March 13, 1980	Rohner Gehrig & Co., Inc.	R66/27833 etc.	United States value	U.S. selling prices, less 1% cash discount as determined by customs officer at time of appraisement; less 25.3% representing profit and general expenses usually made in U.S. on sales of dyestuffs of same class or	U.S. v. Geigy Chemical Corporation et el. (C.A.D. 1155)	New York Benzenoid dyestuffs

					kind; less costs of transportation and insurance from place of shipment to place of delivery in amounts determined by customs officer at time of appraisement; divided by 1.40 or such other factor applied by customs officer, to allow for customs duties payable on imported dyestuffs		
R80/47	Watson, J. March 13, 1980	Rohner Gehrig & Co., Inc.	R66/28415	United States value	U.S. selling prices, less 1% cash discount as determined by customs officer at time of appraisement; less 33.4% representing profit and general expenses usually made in U.S. on sales of dyestuffs of same class or kind; less costs of transportation and insurance from place of shipment to place of delivery in amounts determined by customs officer at time of appraisement; divided by 1.40 or such other factor applied by customs officer, to allow for customs duties payable on imported dyestuffs	U.S. v. Geigy Chemical Corporation et al. (C.A.D. 1155)	New York Benzenoid dyestuffs

Recent Unpublished Customs Service Decisions

The following listing of recent administrative decisions issued by the Office of Regulations and Rulings, U.S. Customs Service, and not otherwise published, is published for the information of Customs officers and the importing community. Although the decisions are not of sufficient general interest to warrant publication as Treasury decisions, the listing describes the issues involved and is intended to aid Customs officers and concerned members of the public in identifying matters of interest which recently have been considered by the Office of Regulations and Rulings.

A copy of any decision included in this listing, identified by its date and file number, may be obtained in a form appropriate for public distribution upon written request to the Office of Regulations and Rulings, attention: Legal Reference Area, room 2404, U.S. Customs Service, 1301 Constitution Avenue NW., Washington D.C. 20229. These copies will be made available at a cost to the requester of 10 cents per page. However, the Customs Service will waive this charge if the total number of pages copied is 10 or less.

Decisions listed in earlier issues of the CUSTOMS BULLETIN, through October 24, 1979, are available in microfiche format at a cost of $15.10 (15 cents per sheet of fiche). It is anticipated that additions to the microfiche will be made quarterly and subscriptions are available. Requests for the microfiche now available and for subscriptions should be directed to the Legal Reference Area. Subscribers will automatically receive updates as they are issued and will be billed accordingly.

Dated: March 21, 1980.

JOHN T. ROTH,
Acting Director,
Regulations and Research Division.

Date of decision	File no.	Issue
2-15-80	104439	Vessels: Whether container numbers and container seal numbers are required to be listed on the outward foreign cargo declaration

Date of decision	File no.	Issue
3- 3-80	104449	Vessel repair: Whether duties on the cost of foreign repairs to an American vessel are remissible when the repairs were necessitated by the failure, due to metal fatigue, of the gooseneck pin of the jumbo boom
3- 3-80	104453	Vessel repair: Submission of evidence that repairs were necessitated by casualty
3- 3-80	104457	Aircraft: Treatment of aircraft as private or commercial for Customs purposes
2-29-80	610017	Enforcement: Administrative penalties for petty seizures of controlled substances
1-30-80	711256	Entry: Date of entry; date of deposit of entry and duty check versus date that duty check accepted by cashier
2-19-80	711431	Entry: Whether purchaser of imported aircraft is liable for unpaid duties
3- 5-80	711811	Country-of-origin marking: Knife handles
2-21-80	711921	Country-of-origin marking: Digital desk watches
3-11-80	712108	Country-of-origin marking: Potted plants
2-27-80	712344	Country-of-origin marking: Plastic lipstick holders
3- 3-80	712377	Country-of-origin marking: Watch movement parts
2-26-80	712409	Country-of-origin marking: Glow plugs imported in marked individual containers
10-26-79	060670	Classification: Erythobic acid; sodium erythorbate; malic acid (403.80, 429.12, 429.95)
2-19-80	060838	Classification: Openwork knit fabric (351.80, 352.80, 365.50)
2-19-80	060847	Classification: De-inking product (465.30)
2-19-80	060906	Classification: Fruits packed in liquor (146.24, 146.99, 147.29, 147.54, 148.28, 148.86, 148.98, 150.50)
2-15-80	060926	Classification: Wall covering (386.50, 389.62)
2-26-80	060998	Classification: Cork panels (220.20, 220.50)
2-19-80	061271	Classification: Spice rack (772.03, 772.15)
1-29-80	061729	Classification: Miniature village with lighting (256.90, 688.10)
2-15-80	061801	Classification: Capping board used in refining copper (688.40, 773.30)
3- 5-80	061840	Classification: Unfinished shoe style roller skates (734.90)
3- 5-80	061846	Classification: Raincoat with freehanging yokes (382.81)
3- 5-80	061848	Classification: Silk camisole with lace edging (382.05)
2-21-80	061935	Classification: Plain end oil well casing (610.39, 610.42)
1-18-80	062467	Classification: Tote bag (386.09)
2-22-80	062996	Classification: Sintered carbide blanks for use as tips on circular saws (649.53)
2-26-80	062682	Classification: Hog flooring (666.00)
2-14-80	062828	Classification: Duster (389.62, 772.15)
3-10-80	062863	Classification: Parts for hovercraft skirt (359.50, 774.25, 774.55)
2-14-80	062879	Classification: Self-propelled agricultural sprayer (662.45)

Date of decision	File no.	Issue
2-15-80	062931	Classification: Fabric for use as tubes in batteries (338.30)
2-15-80	062967	Classification: Tissue box cover (365.86, 367.55)
2-26-80	063406	Classification: Unfinished watch bracelet and watch bracelet tube ends and connector clips (740.35, 740.38, 740.80)
2-27-80	064001	Classification: Jacket with detachable down-filled lining (380.84, 748.40)
3- 5-80	064039	Classification: Carafe-type bottle; usual and ordinary container
2-19-80	064080	Classification: Silk panels (378.05, 806.20)
3-10-80	064152	Classification: Motocross pants (734.80, 735.20)
2-26-80	064167	Classification: Window shade spring roller (660.80)
2-14-80	064303	Classification: Vinyl mattress cover (772.35)
2-15-80	064334	Classification: Processed cod fish (110.47, 110.50, 110.55)
2-19-80	064340	Classification: Plastic profile shapes (771.55, 774.55)
3- 5-80	064408	Classification: Tents (386.50)
3- 5-80	064434	Classification: Cull-carrot animal feed (135.41, 135.42, 184.85)

International Trade Commission Notices

Investigations by the U.S. International Trade Commission

DEPARTMENT OF THE TREASURY

The appended notices relating to investigations by the U.S. International Trade Commission are published for the information of Customs Officers and others concerned.

R. E. CHASEN,
Commissioner of Customs.

In the Matter of CERTAIN AIRTIGHT CAST-IRON STOVES	Investigation No. 337–TA–69

Notice of Denial of Oriental Kingsworld Industrial Co., Ltd.'s Appeal to the Commission Under 19 CFR 210.60(b)

Having considered the administrative law judge's orders No. 14 and 16 in the above-captioned case, the application for review, and the oppositions of the complainants and the Commission investigative attorney under Commission rule 210.60(b), the Commission denies Oriental Kingsworld Industrial Co., Ltd.'s appeal from the ruling of the administrative law judge, and denies its February 19, 1980 request for oral argument on those issues. The notice of investigation in this case was published in the Federal Register on July 12, 1979. In its notice of institution the Commission stated that the scope of the investigation involved importations that violated section 337(a) by reason that such stoves are—

(a) violating Jotul's common law trademarks because such stoves are visually identical copies of Jotul's stoves;

(b) being passed off as Jotul's product;

(c) violating Jotul's registered U.S. trademarks; and

(d) being falsely advertised,

the effect or tendency of which is to destroy or substantially injure an industry, efficiently and economically operated, in the United States, or to restrain trade and commerce in the United States.

The Commission does not consider its institution of this investigation to have conclusively decided either the question of whether a U.S. industry exists in this instance or whether the alleged unfair acts are evidence of "restraints of trade" under section 337. Rather, the Commission considers its institution of this investigation to express a willingness to consider evidence on these issues, and therefore instructs the presiding officer to continue gathering all evidence obtainable regarding both the industry and restraint of trade issues.

By order of the Commission.

Issued: March 21, 1980.

KENNETH R. MASON,
Secretary.

(19 CFR 207.40)

Notice of Termination of Nine Countervailing Duty Investigations Concerning Frozen Boneless Beef From the European Communities

AGENCY: U.S. International Trade Commission.

ACTION: Termination of countervailing duty investigations under section 704 of the Tariff Act of 1930.

EFFECTIVE DATE: March 6, 1980.

FOR FURTHER INFORMATION CONTACT: Ms. Vera A. Libeau, Office of Investigations; telephone 202–523–0368.

SUPPLEMENTARY INFORMATION: The Trade Agreements Act of 1979, subsection 104(a)(1)(C), requires the Commission to conduct countervailing duty investigations in cases where the Commission receives the most current net subsidy information pertaining to any countervailing duty order in effect on January 1, 1980, applicable to frozen, boneless beef from the European Communities under T.D. 76–109. On February 5, 1980, the Commission received such information from the Department of Commerce with respect to the following countervailing duty orders:

Frozen boneless beef, provided for in tariff schedule item 106.10/ Belgium.

Frozen boneless beef, provided for in tariff schedule item 106.10/ Denmark.

Frozen boneless beef, provided for in tariff schedule 106.10/ Federal Republic of Germany.

Frozen boneless beef, provided for in tariff schedule item 106.10/ France.

Frozen boneless beef provided for in tariff schedule item 106.10/ Ireland.

Frozen boneless beef provided for in tariff schedule item 106.10/ Italy.

Frozen boneless beef provided for in tariff schedule item 106.10/ Luxembourg.

Frozen boneless beef provided for in tariff schedule item 106.10/ Netherlands.

Frozen boneless beef, provided for in tariff schedule item 106.10/ United Kingdom.

The Commission has received communications from the original petitioners for these countervailing duty orders—the American Farm Bureau Federation and the National Cattlemen's Association. In a letter dated February 21, 1980, the American Farm Bureau Federation informed the Commission that it had withdrawn from its status as a petitioner for these countervailing duty investigations in 1975. The National Cattlemen's Association requested that the Commission terminate those investigations under section 704 of the Tariff Act of 1930. This request was received on February 26, 1980.

Section 704 requires that all parties be notified of the termination. The receipt of these letters from the original petitioners prior to the formal institution of the investigations presents the Commission with a situation in which no persons have formally appeared as parties to these investigations. Section 704, however, does not require that the Commission formally institute proceedings in order that the original petitioners formally appear as parties to request termination of the investigations. For these reasons the Commission is acknowledging the information supplied by the American Farm Bureau Federation and granting the request of the National Cattlemen's Association by terminating these investigations.

In addition to publishing this notice in the Federal Register, the Commission is serving this notice on all persons who have written the agency in connection with the investigations and is notifying the Department of Commerce of its action in these cases.

By order of the Commission.

Issued: March 7, 1980.

KENNETH R. MASON,
Secretary.

Notice of Institution of Final Antidumping Investigation and Scheduling of Hearings, 731–TA–16 (Final): Melamine in Crystal Form, Provided for in TSUS Item 425.10, From the Netherlands

AGENCY: U.S. International Trade Commission.

ACTION: Institution of a final antidumping investigation under section 735(b) of the Tariff Act of 1930 to determine whether with respect to melamine in crystal form (provided for in TSUS item 425.10) from the Netherlands there is a reasonable indication that an industry in the United States is materially injured, or threatened with material injury, or the establishment of an industry in the United States is materially retarded, by reason of imports of the merchandise allegedly sold or likely to be sold at less than fair value.

EFFECTIVE DATE: February 26, 1980.

FOR FURTHER INFORMATION CONTACT: John MacHatton, 202–523–0439, the supervisory investigator.

SUPPLEMENTARY INFORMATION: The Trade Agreements Act of 1979, section 735(b)(2), requires that the Commission make a final antidumping determination in cases where the administering authority has issued an affirmative preliminary determination under section 733(b) as to the question of less-than-fair-value sales. Accordingly, the Commission hereby gives notice that, effective as of February 26, 1980, it is instituting investigation No. 731–TA–16 (final) pursuant to section 735(b) of the Tariff Act of 1930, as added by title I of the Trade Agreements Act of 1979. This investigation will be subject to the provisions of part 207 of the Commission's Rules of Practice and Procedure (19 CFR 207, 44 F.R. 76457) and, particularly, subpart B thereof, effective January 1, 1980.

WRITTEN SUBMISSIONS: Any person may submit to the Commission by April 8, 1980 a written statement of information pertinent to the subject matter of this investigation. A signed original and 19 true copies of such statements must be submitted.

Any business information which a submitter desires the Commission to treat as confidential shall be submitted separately and each sheet must be clearly marked at the top "Confidential business data." Confidential submissions must conform with the requirements of section 201.6 of the Commission's Rules of Practice and Procedure (19 CFR 201.6). All written submissions, except for confidential business data, will be available for public inspection.

HEARING: The Commission has scheduled a hearing in this investigation beginning at 10 a.m., e.s.t. on April 11, 1980, in the hearing room, U.S. International Trade Commission Building. Parties wishing

to participate in the hearing should notify the Office of the Secretary, U.S. International Trade Commission Building, 701 E Street NW., Washington, D.C. 20436. A preliminary staff report will be available to all interested parties on March 25, 1980. Any person's prehearing statement must be filed by April 8, 1980. All parties who desire to appear at the hearing and make oral presentations must file prehearing statements. For further information consult the Commission's Rules of Practice and Procedure, part 207, subpart C (44 F.R. 76457), effective January 1, 1980.

By order of the Commission.

Issued: March 13, 1980.

KENNETH R. MASON,
Secretary.

In the Matter of CERTAIN SKATEBOARDS AND PLATFORMS THEREFOR	Investigation No. 337–TA–37

Notice Concerning Commission Request for Written Comments and Information on Remedy, Bonding, and the Public Interest

BACKGROUND

On the basis of an amended complaint filed by Richard L. Stevenson pursuant to section 337 of the Tariff Act of 1930, as amended (19 U.S.C. 1337), the U.S. International Trade Commission on November 4, 1977, instituted an investigation to determine whether there was a violation of section 337 in the unauthorized importation and sale of certain skateboards by reason of the alleged coverage of such skateboards by claims by U.S. Letters Patent 3,565,454, the effect or tendency of which was to destroy or substantially injure an industry, efficiently and economically operated, in the United States. Notice of the Commission's investigation was published in the Federal Register of November 11, 1977 (42 F.R. 58792).

On November 13, 1978, the Commission ordered termination of its investigation based on the determination that there was no violation of section 337 because the relevant claims of the patent in controversy were for the purpose of section 337 invalid as obvious within the meaning of 35 U.S.C. 103. Notice of the Commission's order of termination was published in the Federal Register of November 16, 1978 (43 F.R. 53511).

On January 12, 1979, complainant Stevenson appealed the Commission's determination to the U.S. Court of Customs and Patent Appeals pursuant to 19 U.S.C. 1337(c). In a decision handed down on

December 20, 1979, the court reversed the Commission's determination that there was no violation of section 337, and remanded the case to the Commission for action consistent with the court's opinion.[1]

REQUEST FOR WRITTEN COMMENTS CONCERNING REMEDY, BONDING, AND THE PUBLIC INTEREST

Inasmuch as the U.S. Court of Customs and Patent Appeals has found the relevant claims of the patent in controversy to be valid, enforceable, and infringed for the purpose of section 337, and since the active parties to the Commission's investigation stipulated to the issues of importation, effect or tendency to destroy or substantially injure the domestic industry, and efficient and economic operation of the domestic industry, the Commission considers that a violation of section 337 has been established. Prior to final disposition of the investigation, the Commission requests parties to the investigation, interested agencies, public-interest groups, and any other interested members of the public to submit written comments and information concerning the remedy, bonding, and public interest aspects of the case. The original and 19 true copies of all written comments must be submitted within 30 days of the date this notice appears in the Federal Register, and should include a proposed remedy, a proposed determination of bonding, and a discussion of those proposals on the public health and welfare, competitive conditions in the U.S. economy, the production of like or directly competitive articles in the United States, and U.S. consumers.

By order of the Commission.

Issued: March 17, 1980.

KENNETH R. MASON,
Secretary.

Notice of Review of Certain Countervailing Duty Orders

Section 104(b) of the Trade Agreements Act of 1979 in pertinent part provides:

(b) OTHER COUNTERVAILING DUTY ORDERS.—

(1) REVIEW BY COMMISSION UPON REQUEST.—In the case of a countervailing duty order issued under section 303 of the Tariff Act of 1930 (19 U.S.C. 1303)—

(A) which is not a countervailing duty order to which subsection (a) applies,

(B) which applies to merchandise which is the product of a country under the Agreement, and

[1] *Stevenson* v. *U.S. International Trade Commission et al.*, Appeal No. 79-12, decided Dec. 20, 1979. Petition or rehearing denied Feb. 28, 1980.

(C) which is in effect on January 1, 1980, or which is issued pursuant to court order in an action brought under section 516(d) of that Act before that date,

the Commission, upon the request of the government of such a country or of exporters accounting for a significant proportion of exports to the United States of merchandise which is covered by the order, submitted within 3 years after the effective date of title VII of the Tariff Act of 1930 shall make a determination under paragraph (2) of this subsection.

(2) DETERMINATION BY THE COMMISSION.—In a case described in paragraph (1) with respect to which it has received a request for review, the Commission shall commence an investigation to determine whether—

(A) an industry in the United States—

(i) would be materially injured, or

(ii) would be threatened with material injury, or

(B) the establishment of an industry in the United States would be materially retarded,

by reason of imports of the merchandise covered by the countervailing duty if the order were to be revoked.

It is the intention of the Commission to establish a schedule on or about April 30, 1980, for the conduct of investigations pursuant to section 104(b) encompassing requests for such investigations that have been received by March 28, 1980. In accordance with section 207.31 of the Commission's Rules of Practice and Procedure, among the factors considered by the Commission for establishing priorities of institution among such requests when the work before the Commission is such as to make immediate investigation in such cases impractical are:

(a) The trade interests of the United States;

(b) The length of time a countervailing duty order has been in effect (longest first);

(c) The volume of trade of the product in question; and

(d) The appropriateness of consolidation of investigations relating to like products.

Additional investigations, requests for which are received after March 28, 1980, and before December 31, 1982, will be scheduled at later dates.

By order of the Commission.

Issued: March 11, 1980.

KENNETH R. MASON,
Secretary.

(19 CFR 207.40)

Investigation No. 701–TA–8 (Final)

FIREARMS FROM BRAZIL

Notice of Termination of Investigation and Cancellation of Hearing

AGENCY: U.S. International Trade Commission.

ACTION: In view of the withdrawal by both petitioners of the petition upon which investigation No. 701–TA–8 was instituted, the Commission hereby terminates such investigation pursuant to section 704(a) of the Trade Act of 1930.

EFFECTIVE DATE: March 14, 1980.

FOR FURTHER INFORMATION CONTACT: Mr. Bruce Cates, Office of Investigations; telephone 202–523–0368.

SUPPLMENTARY INFORMATION: By notice issued January 10, 1980, and published in the Federal Register (45 F.R. 3400, January 17, 1980), the Commission instituted the subject investigation to determine whether with respect to the articles involved an industry, in the United States is materially injured, or is threatened with material injury, or the establishment of an industry in the United States is materially retarded, by reason of the subsidized imported merchandise. A public hearing was scheduled, on a tentative basis, to be held at the International Trade Commission Building, on April 5, 1980

Section 704(a) of the Tariff Act of 1930 permits the termination of a countervailing duty investigation after notice to all parties to the investigation, upon withdrawal of the petition by the petitioner. Pursuant to section 704(a) of the act, however, the Commission may not terminate an investigation before a preliminary determination is made by the Department of Commerce under section 703(b) of the act. In the present investigation, the administering authority (at that time the Department of the Treasury) made an affirmative preliminary determination—44 F.R. 53597, September 14, 1979—and both petitioners have withdrawn the petition on which the present investigation was instituted.

The requirements of section 704(a) having been satisfied, the Commission grants the request to terminate the investigation. In addition to this notice, the Commission is notifying the Department of Commerce and both petitioners of this action.

By order of the Commission.

Issued: March 14, 1980.

KENNETH R. MASON,
Secretary.

(19 CFR 207.40)

Investigation No. 701–TA–10 (Final)

FERROALLOYS FROM BRAZIL

Notice of Termination of Investigation and Cancellation of Hearing

AGENCY: U.S. International Trade Commission.

ACTION: In view of the withdrawal by the petitioners of the petition upon the basis of which investigation No. 701–TA–10 was initiated, the Commission hereby terminates such investigation pursuant to section 704(a) of the Trade Act of 1930.

EFFECTIVE DATE: March 14, 1980.

FOR FURTHER INFORMATION CONTACT: Mr. Dan Leahy, Office of Investigations; telephone 202–523–1369.

SUPPLEMENTARY INFORMATION: By notice issued January 10, 1980, and published in the Federal Register (45 F.R. 3400 (January 17, 1980)), the Commission instituted the subject investigation to determine whether with respect to the articles involved an industry in the United States is materially injured, or is threatened with material injury, or the establishment of an industry in the United States is materially retarded, by reason of the subsidized imported merchandise. A public hearing was scheduled, on a tentative basis, to be held at the International Trade Commission Building, on April 8, 1980.

The legal authority for a request to withdraw a petition for a countervailing duty investigation and the legal authority for the Commission to terminate an investigation in response to a request to withdraw the petition are found in section 704 of the Tariff Act of 1930. The only restriction on the Commission's authority to terminate is that all parties to the investigation must be notified of the termination. In the instant case no requests for appearances before the Commission have been received. For these reasons the Commission is granting the request and terminating this investigation. In addition to notifying interested persons who have not appeared before the agency, the Commission is notifying the Department of Commerce of its action in this case.

By order of the Commission.

Issued: March 14, 1980.

KENNETH R. MASON,
Secretary.

In the Matter of CERTAIN PLASTIC BOUQUET HOLDERS	Investigation No. 337-TA-80

Order No. 1

Pursuant to my authority as Chief Administrative Law Judge of this Commission, I hereby designate Administrative Law Judge Donald K. Duvall as presiding officer in this investigation.

The Secretary shall serve a copy of this order upon all parties of record and shall publish it in the Federal Register.

Issued: March 11, 1980.

DONALD K. DUVALL,
Chief Administrative Law Judge.

Index

U.S. Customs Service

	T. D. No.
Treasury decisions:	
Corporate name change of a Customs-approved public gager	80-92
Customhouse broker license—cancellation license No. 4825	80-93
Foreign currencies:	
Daily certified rates; March 10-14, 1980	80-95
Rates which varied from quarterly rate; week of March 10-14, 1980	80-96
Synopses of drawback decisions	80-94
Construction equipment, crawler, truck, cranes	80-94-A
Ball bearings, finished steel	80-94-B
Orange juice, frozen concentrated	80-94-C
Line printers and lower level subassemblies	80-94-D
Cameras and other photographic equipment	80-94-E
Turbines, steam	80-94-F
Color pigments, lakes, toners, and reduced colors	80-94-G
Jeep vehicles	80-94-H
Steel plates, hot- and cold-rolled coils and sheets, galvanized coils and sheets	80-94-I
Windows for airplanes, ground view	80-94-J
Cigarettes, blended tobaccos and cut and blended tobaccos	80-94-K
Agricultural and industrial equipment	80-94-L
Polyvinyl products, unfinished	80-94-M
Microfilm readers and reader printers	80-94-N
Asphalt base aluminum roof coatings	80-94-O
Cigarettes and blended cigarette tobacco	80-94-P
2-methyl-4-nitro imidazole	80-94-Q
Electrodes, coated welding	90-94-R
Nylon 6/6 monofilament sewing thread	80-94-S
Steel products	80-94-T
Sweepers, scrubbers, and brush assemblies	80-94-U
TLA-230, acalcium sulfonate surfact active agent	80-94-V
Electronic organs	80-94-W
Watches and watch heads	80-94-X
Velvet cloth	80-94-Y
Reprographic machine and peripheral equipment and related tools	80-94-Z

Customs Court

Articles of metal, coated or plated:
With gold; champagne goblets, C.D. 4847
With silver, C.D. 4847

Champagne goblets, C.D. 4847
    Articles of metal, coated or plated with gold, C.D. 4847
Classification; commercial meaning of tariff term, C.D. 4847
Commercial:
    Designation, rule of, C.D. 4847
    Meaning of tariff term; classification, C.D. 4847
Construction:
    Code of Federal Regulations, title 16, sec. 23.22, C.D. 4847
    Tariff Schedules of the United States:
        General Headnotes and Rules of Interpretation:
            Rule 10(c), C.D. 4847
            Rule 10(d), C.D. 4847
        Item 653.75, C.D. 4847
        Item 653.80, C.D. 4847
Definition; gilt, C.D. 4847
E-22 champagne goblets, C.D. 4847
Federal Trade Commission regulation; gold content, misrepresentation as to, C.D. 4847
General Interpretative Rule 10(c); relative specificity, C.D. 4847
Goblets, champagne, C.D. 4847
Gold:
    Content, misrepresentation as to; Federal Trade Commission regulations, C.D. 4847
    Plating; plated with gold, C.D. 4847
Lexicographic source; *Webster's Third International Dictionary* (1973 ed.), C.D. 4847
Plated with gold; gold plating, C.D. 4847
Relative specificity; General Interpretative Rule 10(c), C.D. 4847
Treatises and related publications; Sturm, *A Manual of Customs Law* (1974), p. 10, C.D. 4847
Words and phrases: gilt, C.D. 4847

U.S. GOVERNMENT PRINTING OFFICE : 1980 O - 315-596

APR 1 6 1980
T 1.11/3:14/16

Customs Bulletin

Regulations, Rulings, Decisions, and Notices concerning Customs and related matters

and Decisions

of the United States Court of Customs and Patent Appeals and the United States Customs Court

Vol. 14 APRIL 16, 1980 No. 16

This issue contains

General Notice

Reap. abstracts R80/48 through R80/70

International Trade Commission Notice

THE DEPARTMENT OF THE TREASURY
U.S. Customs Service

NOTICE

The abstracts, rulings, and notices which are issued weekly by the U.S. Customs Service are subject to correction for typographical or other printing errors. Users may notify the U.S. Customs Service, Logistics Management Division, Washington, D.C. 20229, of any such errors in order that corrections may be made before the bound volumes are published.

For sale by the Superintendent of Documents, U.S. Government Printing Office, Washington, D.C. 20402. Price: $1.30 (single copy domestic); $1.65 (single copy foreign). Subscription price: $65.00 a year domestic; $81.25 a year foreign.

U.S. Customs Service

General Notice

(TMK-2-RRUEE)

Notice of Application for Recordation of Trade Name Florasynth, Inc.

Application has been filed pursuant to section 133.12 Customs Regulations (19 CFR 133.12), for recordation under section 42 of the act of July 5, 1946, as amended (15 U.S.C. 1124) of the trade name Florasynth, Inc., used by Florasynth, Inc., a corporation organized under the laws of the State of New York, located at 410 East 62d Street, New York, N.Y. 10021.

The applicant states that the trade name is applied to essences and aromatic ingredients used as bases for cosmetics, toilet preparations, perfumes and colognes, and as flavor in foods, beverages, and tobacco products; essential oils, used as an odorant to mask disinfectants, insecticides, and similar products; extracts, flavors, oils, and emulsions for use in making soft drink sirups and bases; nonalcoholic preparation for producing a foam in soft drinks, and a flavoring agent used in the preparation of root beer; orange compound adapted to produce a cloud in nonalcoholic, maltless soft drink beverages, and having flavoring ingredients; natural and synthetic organic flavors, extracts, oils, and blenders for alcoholic beverages; imitation vanilla bean flavor; grapefruit juice powder, lemon juice powder, lime juice powder, orange juice powder, and brown sugar powdered flavor; citrus oils for food purposes; onion powder and garlic powder; and coffee, manufactured in Brazil, Canada, England, France, Japan, Mexico, and the United States. Various foreign subsidiaries are authorized to use the trade name. Appropriate accompanying papers were submitted with the application.

Before final action is taken on the application, consideration will be given to any relevant data, views, or arguments submitted in writing by any person in opposition to the recordation of this trade name. Any such submission should be addressed to the Commissioner of Customs, Washington, D.C. 20229, in time to be received not later

than 30 days from the date of publication of this notice in the Federal Register.

Notice of the action taken on the application for recordation of the trade name will be published in the Federal Register.

Dated: February 1, 1980.

DONALD W. LEWIS,
Director, Office of
Regulations and Rulings.

Decisions of the United States Customs Court

United States Customs Court

One Federal Plaza
New York, N.Y. 10007

Chief Judge

Edward D. Re

Judges

Paul P. Rao
Morgan Ford
Scovel Richardson
Frederick Landis
James L. Watson
Herbert N. Maletz
Bernard Newman
Nils A. Boe

Senior Judge

Samuel M. Rosenstein

Clerk

Joseph E. Lombardi

Abstracts

Abstracted Reappraisement Decisions

DEPARTMENT OF THE TREASURY, *March 24, 1980.*

The following abstracts of decisions of the United States Customs Court at New York are published for the information and guidance of officers of the Customs and others concerned. Although the decisions are not of sufficient general interest to print in full, the summary herein given will be of assistance to customs officials in easily locating cases and tracing important facts.

ROBERT E. CHASEN,
Commissioner of Customs.

DECISION NUMBER	JUDGE & DATE OF DECISION	PLAINTIFF	COURT NO.	BASIS OF VALUATION	HELD VALUE	BASIS	PORT OF ENTRY AND MERCHANDISE
R80/48	Rao, J. March 17, 1980	Imported Rug Associates, Ltd.	R63/5751, etc.	Export value	F.o.b. unit invoice prices plus 20% of difference between f.o.b. unit invoice prices and appraised values	Agreed statement of facts	New York Rugs
R80/49	Rao, J. March 17, 1980	Stone & Downer Co. Inc.	R58/22615, etc.	Export value	F.o.b. unit invoice prices plus 20% of difference between f.o.b. unit prices and appraised values, net packed	Agreed statement of facts	Boston Binoculars
R80/50	Rao, J. March 17, 1980	Strong Importers, Inc.	242663-A, etc.	Export value	Appraised values less 7.5%	Agreed statement of facts	New York Sewing machines
R80/51	Watson, J. March 17, 1980	Geigy Chemical Corporation	R65/24002, etc.	United States value	U.S. selling prices, less 1% cash discount as determined by customs officer at time of appraisement; less 25.7% representing profit and general expenses usually made in U.S. on sales of dyestuffs of same class or kind; less costs of transportation and insurance from place of shipment to place of delivery in amounts determined by customs officer at time of	U.S. v. Geigy Chemical Corporation et al. (C.A.D. 1155)	New York Benzenoid dyestuffs

					appraisement; divided by 1.40 or such other factor applied by customs officer, to allow for customs duties payable on imported dyestuffs		
R80/52	Watson, J. March 17, 1980	Rohner Gehrig & Co., Inc.	R66/19746	United States value	U.S. selling prices, less 1% cash discount as determined by customs officer at time of appraisement; less 23.5% representing profit and general expenses usually made in U.S. on sales of dyestuffs of same class or kind; less costs of transportation and insurance from place of shipment to place of delivery in amounts determined by customs officer at time of appraisement; divided by 1.40 or such other factor applied by customs officer, to allow for customs duties payable on imported dyestuffs	U.S. v. Geigy Chemical Corporation et al. (C.A.D. 1155)	New York Benzenoid dyestuffs
R80/53	Rao, J. March 18, 1980	Brother International Corp.	R65/4303, etc.	Export value	F.o.b. unit invoice prices plus 20% of difference between f.o.b. unit invoice prices and appraised values	Agreed statement of facts	Philadelphia Consoles and sewing machine heads

DECISION NUMBER	JUDGE & DATE OF DECISION	PLAINTIFF	COURT NO.	BASIS OF VALUATION	HELD VALUE	BASIS	PORT OF ENTRY AND MERCHANDISE
R80/54	Rao, J. March 18, 1980	Hayim & Co.	R59/7080, etc.	Export value	F.o.b. unit invoice prices plus 20% of difference between f.o.b. unit invoice prices and appraised values	Agreed statement of facts	New York Rugs
R80/55	Rao, J. March 18, 1980	Imported Rug Associates, Ltd.	R66/1803, etc.	Export value	F.o.b. unit invoice prices plus 20% of difference between f.o.b. unit invoice prices and appraised values	Agreed statement of facts	New York Rugs
R80/56	Rao, J. March 18, 1980	Imported Rug Associates, Ltd.	R67/2211, etc.	Export value	F.o.b. unit invoice prices plus 20% of difference between f.o.b. unit invoice prices and appraised values	Agreed statement of facts	New York Rugs
R80/57	Rao, J. March 18, 1980	Imported Rug Associates, Ltd.	R67/15477, etc.	Export value	F.o.b. unit invoice prices plus 20% of difference between f.o.b. unit invoice prices and appraised values	Agreed statement of facts	New York Rugs
R80/58	Rao, J. March 19, 1980	Brother International Corp.	R61/18710	Export value	Appraised unit values less 7.5%, net packed	Agreed statement of facts	New York Sewing machine heads
R80/59	Rao, J. March 19, 1980	Brother International Corp.	R62/12990, etc.	Export value	Appraised unit values less 7.5%, net packed	Agreed statement of facts	Philadelphia Sewing machines and wooden consoles

R80/60	Rao, J. March 19, 1980	Mitsubishi International Corp.	R62/2241, etc.	Export value	Appraised unit values less 7.5%, net packed	Agreed statement of facts	New York Canned tuna
R80/61	Rao, J. March 19, 1980	Transworld Industries, Inc.	R62/2312, etc.	Export value	Appraised unit values less 7.5%, net packed	Agreed statement of facts	New York Sewing machines
R80/62	Rao, J. March 19, 1980	Trans World Industries, Inc.	R65/23084, etc.	Export value	Appraised unit values less 7.5%, net packed	Agreed statement of facts	New York Sewing machines
R80/63	Ford, J. March 19, 1980	C M Import & Export Corp.	R65/4951, etc.	United States value	F.o.b. unit invoice prices plus 50%	Agreed statement of facts	San Francisco Electron receiving tubes
R80/64	Ford, J. March 19, 1980	C M Import & Export Corp.	R66/16864	United States value	F.o.b. unit invoice prices plus 50%	Agreed statement of facts	New York Electron receiving tubes
R80/65	Re, C. J. March 20, 1980	Holly Stores Inc.	76-8-01839, etc.	Export value	Appraised values shown on entry papers less those additions included in appraised values to reflect currency revaluation	C.B.S. Imports Corp. v. U.S. (C.D. 4739)	Los Angeles Wearing apparel, etc.
R80/66	Rao, J. March 20, 1980	Brother Int'l Corp.	R63/1222, etc.	Export value	F.o.b. unit invoice prices plus 20% of difference between f.o.b. unit invoice prices and appraised values	Agreed statement of facts	Philadelphia Sewing machine heads
R80/67	Rao, J. March 20, 1980	Consolidated Sewing Machine Corp.	R62/9577, etc.	Export value	F.o.b. unit invoice prices plus 20% of difference between f.o.b. unit invoice prices and appraised values	Agreed statement of facts	Los Angeles Sewing machine heads

315-597 O - 80 - 2

DECISION NUMBER	JUDGE & DATE OF DECISION	PLAINTIFF	COURT NO.	BASIS OF VALUATION	HELD VALUE	BASIS	PORT OF ENTRY AND MERCHANDISE
R80/68	Rao, J. March 20, 1980	Tanross Supply Co.	R58/1720, etc.	Export value	F.o.b. unit invoice prices plus 20% of difference between f.o.b. unit invoice prices and appraised values	Agreed statement of facts	New York Binoculars
R80/69	Rao, J. March 20, 1980	Trans World Industries, Inc.	R65/16050, etc.	Export value	Appraised unit values less 7.5%, net packed	Agreed statement of facts	New York Sewing machines
R80/70	Ford, J. March 20, 1980	C M Import & Export Corp.	R65/2542	United States value	F.o.b. unit invoice invoice prices plus 50%	Agreed statement of facts	Chicago Electron receiving tubes

International Trade Commission Notices

Investigations by the U.S. International Trade Commission

DEPARTMENT OF THE TREASURY

The appended notices relating to investigations by the U.S. International Trade Commission are published for the information of Customs Officers and others concerned.

R. E. CHASEN,
Commissioner of Customs.

FACTUAL HIGHLIGHTS

Anhydrous Ammonia From the U.S.S.R. USITC Inv. No. TA-406-6

Status of proceedings:

1. Request from President—January 18, 1980.
2. Date investigation instituted by USITC—January 28, 1980.
3. Public hearing (date, time, and location)—March 3, 1980, 10 a.m., USITC hearing room.

U.S. Industry:

1. Number of producers—51.
2. Location of producers (by region and States)—79 locations, primarily in Louisiana, Texas, and Oklahoma.
3. Types of products—Ammonia, NH3 which is used primarily as fertilizer.
4. Employment—1979; 4,162 workers.
5. Estimated quantity of producers' shipments—17.6 million short-tons in 1979.
6. Estimated apparent U.S. consumption—19.5 million short-tons in 1979.
7. Other pertinent data—In October 1979 the Commission determined by a 3 to 2 vote that market disruption exists.

U.S. Imports:

1. Value of imports (in dollars by year)—1977 $103 million; 1978 $134 million; and 1979 $166 million.

2. Major Source of Imports (by country, percent of total, in dollars)—U.S.S.R. 34 percent, $56 million; Canada 31 percent, $51 million; Trinidad 20 percent, $33 million; and Mexico 15 percent, $26 million.

3. Imports as percent of Estimated U.S. Apparent Consumption based on quantity—

Year	Percent by year	
	All sources	U.S.S.R.
1977	6	0
1978	8	2
1979	10	4

In the Matter of CERTAIN AIRTIGHT, CAST-IRON STOVES	Investigation No. 337-TA-69

Notice of Termination

Upon consideration of the presiding officer's recommendation and the record in this proceeding, the Commission is ordering the termination of investigation No. 337-TA-69, Certain Airtight Cast-Iron Stoves, as to respondents Radke Imports, Inc., and Tetro Imports, by granting the motion (motion docket No. 69-7) by the Commission investigative attorney to terminate this investigation as to those two respondents. The motion to terminate was unopposed by the complainants, Jotul, Inc., and Kristia Associates.

The order is effective as of March 26, 1980.

Any party wishing to petition for reconsideration of the Commission's action must do so within 14 days of service of the Commission order and Commissioners' opinion(s). Such petitions must be in accord with Commission rule 210.56 (19 CFR 210.56).

Copies of the Commission's action and order, the Commissioners' opinion(s), and any other public documents in this investigation are available to the public during official working hours (8:45 a.m. to 5:15 p.m.) in the Office of the Secretary, U.S. International Trade Commission, 701 E Street NW., Washington, D.C. 20436; telephone 202-523-0161.

Notice of the institution of this investigation was published in the Federal Register of July 12, 1979 (44 F.R. 4073233).

Issued: March 26, 1980.

KENNETH R. MASON,
Secretary.

PORTABLE ELECTRIC TYPEWRITERS—INVESTIGATION NO. 731-TA-12 (FINAL)

Notice of Scheduling of Hearing

ACTION: Notice hereby given that:

(a) Public hearing date confirmed, viz, for 9 a.m., e.s.t., Thursday, April 10, 1980, in the Commission's hearing room, 701 E Street NW., Washington, D.C.,

(b) Prehearing staff report will be available to the parties on Monday, March 24, 1980,

(c) Prehearing conference will be held beginning at 10 a.m., e.s.t., Thursday, April 3, 1980, and

(d) Prehearing statements are due from parties by Thursday, April 8, 1980.

FOR FURTHER INFORMATION CONTACT: Bruce Cates, the supervisory investigator assigned by the Commission to this investigation. Telephone 202-523-0368.

SUPPLEMENTARY INFORMATION: The Commission instituted investigation 731-TA-12 (final) concerning portable electric typewriters from Japan effective January 1, 1980 (45 F.R. 3401, January 17, 1980), pursuant to section 102(b) of the Trade Agreements Act of 1979. That notice incorporated a tentative hearing date.

By order of the Commission.

Issued: March 27, 1980.

KENNETH R. MASON,
Secretary.

MELAMINE IN CRYSTAL FORM—INVESTIGATION NOS. 731-TA-13 (FINAL), 731-TA-14 (FINAL), AND 731-TA-16 (FINAL)

Notice of Scheduling of Hearing

ACTION: Notice is hereby given that:

(a) Public hearing date confirmed, viz, for 10 a.m., Friday, April 11,

1980, in the Commission's hearing room, 701 E Street NW., Washington, D.C.,

(b) Prehearing staff report will be available to the parties on Tuesday, March 25, 1980,

(c) Prehearing statements are due from parties by Wednesday, April 9, 1980.

FOR FURTHER INFORMATION CONTACT: John MacHatton, the supervisory investigator assigned by the Commission to this investigation. Telephone 202-523-0439.

SUPPLEMENTARY INFORMATION: The Commission effective January 1, 1980, instituted investigations 731-TA-13 (final) and 731-TA-14 (final) (45 F.R. 3401, January 17, 1980) and effective February 26, 1980, instituted investigation 731-TA-16 (final) (45 F.R. 17096, March 17, 1980). That notice incorporated a tentative hearing date.

By order of the Commission.

Issued: March 27, 1980.

KENNETH R. MASON,
Secretary.

[(731-TA-18/24 (Preliminary))]

CERTAIN CARBON STEEL PRODUCTS FROM BELGIUM, THE FEDERAL REPUBLIC OF GERMANY, FRANCE, ITALY, LUXEMBOURG, THE NETHERLANDS, AND THE UNITED KINGDOM

Notice of Institution of Preliminary Antidumping Investigations and Scheduling of Conference

Investigations instituted.—Following receipt of petitions on March 21, 1980, filed on behalf of United States Steel Corp., the Commission on March 26, 1980, instituted preliminary antidumping investigations under section 733(a) of the Tariff Act of 1930 to determine whether there is a reasonable indication that an industry in the United States is materially injured, or is threatened with material injury, or the establishment of an industry in the United States is materially retarded, by reason of imports of the following articles of iron or steel, other than alloys of iron or steel,[1] which the petitioner alleges are being, or are likely to be, sold in the United States at less than fair value:

Plate, provided for in TSUS items 607.66, 607.83, 607.94, 608.07, and 608.11,

---

[1] The articles descriptions in the petitions were derived from the Tariff Schedules of the United States Annotated (1978) (TSUS). This notice provides for identical coverage in terms of the TSUS (1980).

Hot-rolled sheet, provided for in TSUS items 607.67 and 607.83,
Cold-rolled sheet, provided for in TSUS item 607.83,
Sheet, coated or plated with zinc, provided for in TSUS items 608.07 and 608.13, and
Angles, shapes, and sections, having a maximum cross-sectional dimension of 3 inches or more, provided for in TSUS item 609.80,

all the foregoing articles the products of Belgium (investigation No. 731-TA-18), the Federal Republic of Germany (investigation No. 731-TA-19), France (investigation No. 731-TA-20), Italy (investigation No. 731-TA-21), Luxembourg (angles, shapes, and sections only—investigation No. 731-TA-22), the Netherlands (except angles, shapes, and sections—investigation No. 731-TA-23), and the United Kingdom (investigation No. 731-TA-24).

These investigations will be subject to the provisions of part 207 of the Commission's Rules of Practice and Procedure (19 CFR 207, 44 F.R. 76457) and, particularly, subpart B thereof, effective January 1, 1980.

Written submissions.—Any person may submit to the Commission on or before April 23, 1980, a written statement of information pertinent to the subject matter of the investigations. A signed original and 19 copies of such statements must be submitted.

Any business information which a submitter desires the Commission to treat as confidential shall be submitted separately and each sheet must be clearly marked at the top "Confidential business data." Confidential submissions must conform with the requirements of section 201.6 of the Commission's Rules of Practice and Procedure (19 CFR 201.6). All the written submissions, except for confidential business data, will be available for public inspection.

Conference.—The Director of Operations of the Commission has scheduled a conference in connection with the investigations for 10 a.m., e.s.t., on Thursday, April 17, 1980, at the U.S. International Trade Commission Building, 701 E Street NW., Washington, D.C. Parties wishing to participate in the conference should contact the supervisory investigator for the investigations, Mr. Lynn Featherstone, 202-523-1376. It is anticipated that parties in support of the petition for antidumping duties will be allocated 3 hours within which to make an oral presentation at the conference and parties opposed to such petition will be collectively allocated 4 hours. Further details concerning the conduct of the conference will be provided by the supervisory investigator.

Inspection of petitions.—The petitions filed in these cases are available for public inspection at the Office of the Secretary, U.S. International Trade Commission, and at the New York City office of the

U.S. International Trade Commission located at 6 World Trade Center.

Issued: March 27, 1980.

KENNETH R. MASON,
Secretary.

WEIGHING MACHINERY AND SCALES FROM JAPAN—INVESTIGATION No. 701-TA-7 (FINAL)

Notice of Change of Date and Hearing

Notice is hereby given that the hearing in this investigation will be held beginning at 10 a.m., e.s.t., Monday, April 14, 1980, in the Commission's hearing room, U.S. International Trade Commission Building, 701 E Street NW., Washington, D.C. 20436. A tentative hearing date of April 4, 1980, had previously been announced in the Commission's notice of institution of the investigation as published in the Federal Register of January 17, 1980 (45 F.R. 3400).

The Commission will prepare and place on the record by March 24, 1980, a staff report containing preliminary findings of fact. The Commission will serve the public portion of the staff report on the parties no later than March 24, 1980. Parties to the investigation will submit to the Commission a prehearing statement no later than April 8, 1980. Prehearing statements proferred after the close of business, April 8, 1980, will not be accepted. Each prehearing statement should include the following:

(a) Exceptions, if any, to the preliminary findings of fact contained in the staff report;

(b) Any additional or proposed alternative findings of fact;

(c) Proposed conclusions of law; and

(d) Any other information and arguments which the party believes relevant to the Commission's determination in this investigation.

The Commission has waived Commission rule 201.12(d) as amended, "Submission of prepared statements" in connection with this investigation. This rule stated that "Copies of witnesses' prepared statements should be filed with the Office of the Secretary of the Commission not later than 3 business days prior to the hearing and submission of such statements shall comply with sections 201.6 and 201.8 of this subpart." It is nevertheless the Commission's request that parties submit copies of witnesses' prepared testimony as early as practicable before the hearing in order to permit Commission review.

By order of the Commission.

Issued: March 26, 1980.

KENNETH R. MASON,
Secretary.

In the Matter of CERTAIN HOLLOW FIBER ARTIFICIAL KIDNEYS	Investigation No. 337-TA-81

Notice of Investigation

Notice is hereby given that a complaint was filed with the U.S. International Trade Commission on February 6, 1980, under section 337 of the Tariff Act of 1930, as amended (19 U.S.C. 1337), on behalf of Cordis Dow Corp., 999 Brickell Avenue, P.O. Box 450990, Miami, Fla. 33145, alleging that unfair methods of competition and unfair acts exist in the importation into the United States of hollow fiber artificial kidneys, or in their sale, (i) because such hollow fiber artificial kidneys are allegedly covered by claims 17, 18, 19, and 27 of U.S. Letters Patent No. 3,228,876; and (ii) because the proposed respondents breached an agreement not to infringe the '876 patent.

The complaint alleges that the effect or tendency of the unfair methods of competition and unfair acts is to substantially injure an industry, efficiently and economically operated, in the United States. The relief sought by the complaint is the temporary exclusion of the proposed respondents' artificial kidneys after an expedited hearing and their permanent exclusion after a full investigation. The complaint also requests that the Commission grant all other appropriate relief.

Having considered the complaint, the Commission on March 6, 1980, ORDERED THAT—

(1) Pursuant to subsection (b) of section 337 of the Tariff Act of 1930, as amended (19 U.S.C. 1337), an investigation be instituted to determine whether there is reason to believe there is a violation and whether there is a violation of subsection (a) of this section, in the unauthorized importation of hollow fiber artificial kidneys into the United States, or in their sale, because such hollow fiber artificial kidneys are allegedly covered by claims 17, 18, 19, and 27 of U.S. Letters Patent No. 3,228,876, the effect or tendency of which is substantially to injure an industry, efficiently and economically operated, in the United States;

(2) That portion of the complaint alleging a breach of contract, as set forth in (ii) above, is not part of this investigation. The Commission determined that this position of the complaint was not clearly distinguishable from the allegation of patent infringement and, therefore, should not be treated as a separate count. This ruling should not be construed to prevent complainant from amending its complaint by alleging more specifically the factual basis and legal theories underlying the alleged breach of contract which would fall within the Commis-

sion's jurisdiction. The Commission may, in its discretion, entertain a subsequent motion to amend this notice of investigation pursuant to sections 210.20(d) and 210.22 of the Commission rules;

(3) For the purpose of this investigation so instituted, the following are hereby named as parties upon which this notice of investigation shall be served:

(a) The complainant is—

Cordis Dow Corp.
999 Brickell Avenue
P.O. Box 450990
Miami, Fla. 33145

(b) The respondents are the following companies alleged to be involved in the unauthorized importation of certain hollow fiber artificial kidneys into the United States, or in their sale, and are parties upon whom the complaint shall be served:

Terumo America, Inc. 2811 E. Ana Compton, Calif. 90221	Terumo Kabushiki Kaisha 44–1, 2-chome Hatagaya, Shibuya-ku Tokyo, Japan

(c) Robert M. M. Seto, U.S. International Trade Commission, 701 E Street NW., Washington, D.C. 20436, is hereby named Commission investigative attorney, a party to this investigation; and

(d) For the investigation so instituted, Chief Administrative Law Judge Donald K. Duvall, U.S. International Trade Commission, 701 E Street NW., Washington, D.C. 20436, shall designate the presiding officer.

Responses must be submitted by the named respondents in accordance with section 210.21 of the Commission's Rules of Practice and Procedure (19 CFR 210.21). Pursuant to sections 201.16(d) and 210.21(a) of the rules, such responses will be considered by the Commission if received not later than 20 days after the date of service of the complaint. Extensions of time for submitting a response will not be granted unless good and sufficient cause is shown.

Failure of a respondent to file a timely response to each allegation in the complaint as limited by this notice may be deemed to constitute a waiver of the right to appear and contest the allegations of the complaint as limited by this notice, and to authorize the presiding officer and the Commission, without further notice to the respondents, to find the facts to be as alleged in the complaint as limited by this notice and to enter both a recommended determination and a final determination containing such findings.

The complaint, except for the confidential information contained therein, is available for inspection by interested persons at the Office

of the Secretary, U.S. International Trade Commission, 701 E Street NW., Washington, D.C. 20436, and in the Commission's New York Office, 6 World Trade Center, New York, N.Y. 10048.

By order of the Commission.

Issued: March 26, 1980.

KENNETH R. MASON,
Secretary.

In the Matter of CERTAIN COAT HANGER RINGS	Investigation No. 337–TA–70

COMMISSION REQUEST FOR PUBLIC COMMENTS CONCERNING RECOMMENDED DETERMINATION BASED ON SETTLEMENT AGREEMENT

Introduction

In connection with the Commission's investigation, under section 337 of the Tariff Act of 1930, of alleged unfair methods of competition and unfair acts in the importation and sale of certain coat hanger rings in the United States, the presiding officer recommended on December 31, 1979, that the Commission grant a joint motion to terminate the investigation (motion docket No. 70–2) as to all issues and parties involved. The motion was supported by a settlement agreement signed by all parties. No finding was made as to whether there is a present violation of section 337. The presiding officer certified the record to the Commission for its consideration. Copies of the presiding officer's recommended determination may be obtained by interested persons by contacting the Office of the Secretary to the Commission, 701 E Street NW., Washington, D.C. 20436, telephone 202–523–0161.

The text of the settlement agreement is as follows:

SETTLEMENT AGREEMENT

This agreement is entered into as of the 31st day of October 1979, between International Coat Hanger Co., a company having offices at 11785 Cardinal Circle, Garden Grove, Calif. 92642, wherein it conducts a business as "Pacific Coat Hanger Manufacturing Co." (hereinafter referred to as complainant) on one hand, and Beverly Coat Hanger Co., a company having offices at 500 Indiana Street, San Francisco, Calif. 94107 (hereinafter referred to as Beverly), Nagel Manufacturing Co., a company having offices at 9100 United Drive, Austin, Tex. 78757 (hereinafter referred to as Nagel), and Consolidated Automotive, a company having offices at 205 E. St. Elmo Road, Austin, Tex. 78745 (hereinafter referred to as Consolidated) (Beverly,

Nagel, and Consolidated being referred to in combination hereinafter as respondents) on the other hand.

Witnesseth

Whereas, complainant filed a complaint with the International Trade Commission (hereinafter the ITC) resulting in the ITC initiating Investigation No. 337-TA-70 titled "in the Matter of Certain Coat Hanger Rings" (hereinafter the investigation); and,

Whereas, by the investigation, the complainant is seeking to have certain coat hanger rings as now imported by respondents barred from further importation by respondents based on an alleged violation of section 337 of the Tariff Act of 1930 as amended (19 U.S.C. 1337) based on an alleged infringement of complainant's U.S. Patent No. 3, 3,208,708 (hereinafter the patent); and,

Whereas, without thereby or in any way admitting either the validity of the patent or acts of infringement by the respondents jointly or severally, the respondents are willing to voluntarily change their structural design of coat hanger rings alleged by complainant to be in violation of the patent to a structural design admitted by the complainant to be outside the scope of the claims of the patent in order to terminante the investigation in the quickest and least costly fashion possible,

Now therefore, the parties to this agreement do agree as follows:

I. Joint motion to terminate

As soon as practical following the execution of this agreement, the parties agree, by and through their respective attorneys, to enter a Joint Motion to Terminate the Investigation.

II. Structural design changes

2.1 Respondents agree to no longer import, obtain from a domestic or foreign source, manufacture, or sell, for the duration of the patent—being until September 29, 1982, coat hanger rings of the type shown in the patent and covered by the claims thereof.

2.2 Nagel and Consolidated anticipate replacing the accused infringing rings as presently imported and sold by them by a design of the type shown in the now expired U.S. Patent No. 2,998,142 of Reed, a copy of which is attached hereto as exhibit A. (A copy of this exhibit may be obtained from the Office of the Secretary at the Commission.) Complainant agrees that such design is not covered by the claims of U.S. Patent No. 3,208,708.

2.3 Beverly anticipates replacing the accused infringing rings as presently imported and sold by them by a design as set forth in the drawing attached hereto as exhibit B. (A copy of this exhibit may be obtained from the Office of the Secretary at the Commission.) Com-

plainant agrees that such design is not covered by the claims of U.S. Patent No. 3,208,708.

III. Previously manufactured rings

In consideration of respondents voluntarily agreeing to change the design of their coat hanger rings, complainant agrees to allow respondents to dispose of reasonable quantities of previously manufactured rings or rings ordered and in transit which are of respondents' old design as evidenced by physical samples filed with the complaint in USITC Investigation No. 337–TA–70 (hereinafter stock on hand). To this end, complainant hereby grants to respondents, and each of them, a paid-up royalty-free license under U.S. Patent No. 3,208,708 with respect to any and all coat hanger rings sold on or before 60 days from the effective date of this agreement. For any stock on hand sold thereafter, respondents agree to pay and complainant agrees to accept a royalty of $5 per 1,000 rings.

IV. Records, royalty payments, and inspection

(a) Respondents shall keep accurate records showing the number and dates when and if stock on hand is sold so that any royalties due under this agreement can be determined. Within 30 days following the end of any calendar quarter in which stock on hand is sold for which a royalty is due the one of respondents making such sale shall forward a statement to complainant showing the number sold along with payment for the royalty due.

(b) Respondents agree that they will on reasonable notice during regular business hours permit an independent certified public accountant employed by complainant to have access to their records pertaining to the sale of stock on hand to audit and verify the accuracy of the royalty statements submitted by respondents pursuant to this agreement. The cost of any such audit shall be borne by complainant, and only one such audit shall be made in any one fiscal year. Any information obtained from an audit shall be used only for the purpose of determining the accuracy of such royalty reports and for enforcing payment of royalties due and payable to complainant.

V. Quiet enjoyment

So long as any one of the respondents is abiding by the terms of this agreement, complainant agrees to file no legal complaints based on rights under U.S. Patent No. 3,208,708 against any one of respondents which is abiding by the terms of this agreement.

VI. Assignability

This agreement is binding upon and shall inure to the benefit of the parties, their heirs and assigns.

VII. Applicable law

This agreement shall be interpreted in accordance with the law of the State of California and shall be binding on each of the legal representatives of the parties hereto.

VIII. Complete agreement

This Agreement constitutes the complete agreement between the parties and no modifications shall be binding upon the party against whom enforcement of such modification is sought unless it is made in writing referring to this agreement and is signed on behalf of such party by one of its officers, or related principal.

IN WITNESS WHEREOF, the parties hereto have hereunto affixed their corporate seal and subscribed their names.

BEVERLY COAT HANGER CO.	INTERNATIONAL COAT HANGER CO.
NAGEL MANUFACTURING CO.	CONSOLIDATED AUTOMOTIVE

Procedure for Consideration of the Public Interest

Requests for oral argument and oral presentations.—At present, no oral argument or oral presentations are planned with respect to the public-interest factors raised by the recommended determination of the presiding officer. However, the Commission will consider requests for an oral argument or oral presentations if they are received by the Secretary to the Commission on or before April 22, 1980.

Written submissions on the recommended determination.—Written submissions from the parties, other interested persons, Government agencies and departments, governments, or the public with respect to the public interest will be considered by the Commission if received on or before April 22, 1980.

Additional information.—The original and 19 copies of all written submissions must be filed with the Secretary to the Commission. Any person desiring to submit a document (or a portion thereof) to the Commission in confidence, must request in camera treatment. Such request should be directed to the Secretary of the Commission and must include a full statement of the reasons the Commission should grant such treatment. The Commission will either accept such submission in confidence or return the submission. All nonconfidential written submissions will be open to public inspection at the Office of the Secretary.

Notice of the Commission's investigation was published in the Federal Register of July 18, 1979 (44 F.R. 41971).

By order of the Commission.

Issued: March 26, 1980.

KENNETH R. MASON,
Secretary.

(19 CFR 270.40)

MALLEABLE PIPE FITTINGS FROM JAPAN—INVESTIGATION NO. 701-TA-9 (FINAL)

Notice of Termination of Investigation and Cancellation of Hearing

AGENCY: U.S. International Trade Commission.

ACTION: In view of the withdrawal by the petitioners of the petition upon the basis of which investigation No. 701-TA-9 (final) was initiated, the Commission hereby terminates such investigation pursuant to section 704(a) of the Trade Act of 1930.

EFFECTIVE DATE: March 24, 1980.

FOR FURTHER INFORMATION CONTACT: Mr. Lynn Featherstone, Office of Investigations, telephone 202-523-1376.

SUPPLEMENTARY INFORMATION: By notice issued January 10, 1980, and published in the Federal Register of January 17, 1980 (45 F.R. 3400), the Commission instituted the subject investigation to determine whether with respect to the articles involved an industry in the United States is materially injured, or is threatened with material injury, or the establishment of an industry in the United States is materially retarded, by reason of the subsidized imported merchandise. A public hearing was scheduled, on a tentative basis, to be held at the International Trade Commission Building, on April 7, 1980.

The legal authority for a request to withdraw a petition for the countervailing duty investigation and the legal authority for the Commission to terminate an investigation in response to a request to withdraw the petition are found in section 704 of the Tariff Act of 1930. Since a preliminary determination has already been made by the predecessor of the Commerce Department, the only applicable restriction on the Commission's authority to terminate is that all parties to the investigation be notified of the termination. In the instant case no requests for appearances before the Commission have been received. For these reasons the Commission is granting the request and terminating this investigation. The Commission is notifying the Department of Commerce of its action in this case.

By order of the Commission.

Issued: March 25, 1980.

KENNETH R. MASON,
Secretary.

[332-73]

Notice of Release for Public Comment of Provisionally Adopted Chapters of the Harmonized Commodity Description and Coding System

AGENCY: U.S. International Trade Commission

ACTION: Release for public comment, pursuant to Commission investigation No. 332-73, under the authority of section 332 (g) of the Tariff Act of 1930, as amended, of drafts of the following chapters of the Harmonized Commodity Description and Coding System as provisionally adopted by the Harmonized System Committee and the Nomenclature Committee of the Customs Cooperation Council.

Chapter 4: Dairy produce; birds' eggs; natural honey; edible products of animal origin, not elsewhere specified or included
Chapter 12: Oil seeds and oleaginous fruits; miscellaneous grains, seeds and fruit; industrial and medical plants; straw and fodder
Chapter 18: Cocoa and cocoa preparations
Chapter 19: Preparations of cereals, flour or starch; pastrycooks' products
Chapter 21: Miscellaneous edible preparations
Chapter 22: Beverages, spirits and vinegar
Chapter 23: Residues and waste from the food industries; prepared animal fodder
Chapter 35: Albuminoidal substances; glues; enzymes
Chapter 36: Explosives; pyrotechnic products; matches; pyrophoric alloys; certain combustible preparations
Chapter 37: Photographic and cinematographic goods
Chapter 42: Articles of leather; saddlery and harness; travel goods, handbags and similar containers; articles of animal gut (other than silkworm gut)

WRITTEN SUBMISSIONS: Parties wishing to submit written comments should do so by July 1, 1980.

HEARING: Parties desiring the Commission to hold a hearing on these draft chapters of the Harmonized Code should contact the Secretary of the Commission by April 11, 1980, and show good cause for holding a hearing.

COPIES OF DOCUMENTS: Copies of the chapters which are the subject of this notice are available for public inspection at the offices of the Commission, 701 E Street NW., Washington, D.C. 20436, or at 6 World Trade Center, New York, N.Y. 10048. The Commission will also send copies to interested parties upon request.

FOR FURTHER INFORMATION CONTACT: Eugene A. Rosengarden, Director, Office of Nomenclature, Valuation and Related Activities, U.S. International Trade Commission, 701 E Street NW., Washington, D.C. 20436, telephone, 202-523-0370.

SUPPLEMENTARY INFORMATION: In its public notice of February 8, 1980 (45 F.R. 9828 of February 13, 1980), the Commission identified 48 chapters of the Harmonized Commodity Description and Coding System (Harmonized System) for which texts had been provisionally adopted by the Harmonized System and Nomenclature Committees of the Customs Cooperation Council. The purpose of the above mentioned notice was to invite comments and views of interested parties with respect to the 48 chapters.

Since the release of the February 8, 1980 notice, provisionally adopted texts of 11 further chapters have been published by the Customs Cooperation Council. This notice hereby amends the previous notice by adding these 11 new chapter texts to the list of texts released for public comment.

This notice is being issued pursuant to Commission investigation No. 332-73, instituted on January 31, 1975 (40 F.R. 6329), under section 332(g) of the Tariff Act of 1930. The investigation was initiated in accordance with section 608(c) of the Trade Act of 1974, which provides, in part, that the Commission shall institute an investigation which would provide the basis for—

> (2) full and immediate participation by the U.S. International Trade Commission in the U.S. contribution to technical work of the Harmonized Systems [sic] Committee under the Customs Cooperation Council to assure the recognition of the needs of the U.S. business community in the development of a Harmonized Code reflecting sound principles of commodity identification and specification and modern producing methods and trading practices * * *.

The Harmonized Commodity Description and Coding System (Harmonized Code) is being developed by the Customs Cooperation Council (CCC), an 80-member international organization with headquarters in Brussels, as an international commodity classification system which will be adaptable for modernized customs tariff nomenclature purposes and for recording, handling, and reporting of transactions in international trade. The Harmonized Code will be based on, and in many respects will be an extension of, the Customs Cooperation Council Nomenclature (CCCN), formerly known as the Brussels Tariff Nomenclature (BTN).

Currently, the technical team working under auspices of the CCC prepares drafts of the various chapters of the Harmonized Code for consideration by the Harmonized System Committee, which was

established in order to develop the code. These drafts are forwarded to the members and observers of the Committee for their review and submission of written comments. The Committee meets three times a year to consider these drafts and the written comments and presentations of the various delegations. The review of a particular chapter or group of chapters may extend to more than one meeting.

In its public notices of May 4, 1976 (41 F.R. 18716 of May 6, 1976), August 9, 1976 (41 F.R. 34370 of August 13, 1976), December 20, 1976 (41 F.R. 55948 of December 23, 1976), September 1, 1977 (42 F.R. 44852 of September 7, 1977), February 7, 1978 (43 F.R. 5902 of February 10, 1978), October 16, 1978 (43 F.R. 48723 of October 19, 1978), February 14, 1979 (44 F.R. 10435 of February 20, 1979), May 16, 1979 (44 F.R. 29740 of May 22, 1979), and September 5, 1979 (44 F.R. 53112 of September 12, 1979), the Commission identified those chapters which have been considered thus far by the Harmonized System Committee, and the chapters for which a technical team draft has been released.

Following its deliberations on the draft chapters, the Harmonized System Committee forwards recommended texts for the chapters to the Nomenclature Committee. The Nomenclature Committee, which supervises the operations of the Convention on Nomenclature for the Classification of Goods in Customs Tariffs and is responsible for insuring international uniformity in the interpretation and application of the CCCN, reviews the recommended texts for the Harmonized System and returns the draft chapters which it has approved to the Harmonized System Committee. The draft chapters which have thus been provisionally approved by both committees are then held in abeyance pending final revision sessions. It is anticipated that the Harmonized System Committee will begin final revision sessions early in 1981.

The draft chapters released for public comment today have been provisionally adopted by the Harmonized System Committee and the Nomenclature Committee according to the above described procedure. As further chapters are adopted, the Commission will issue future notices requesting public comment.

In 1971, the Department of the Treasury established an Interagency Advisory Committee on Customs Cooperation Council Matters in order to provide a basis for interested Federal agencies to participate with respect to CCC matters. In order to establish and develop U.S. programs and policies with respect to the Harmonized Code, the interagency committee has instituted procedures which take into account the provisions of section 608(c) of the Trade Act of 1974, which call for the Commission to contribute to the U.S. technical input to the Harmonized System Committee. Under these procedures

the Commission is preparing technical comments and proposals on the various chapters of the Harmonized Code for consideration by the interagency committee in the determination of U.S. proposals with respect to the Harmonized Code.

In making proposals, the Commission is seeking and taking into consideration the views of trade and industry and other interested parties and of interested Government agencies.

By order of the Commission:

Issued: March 21, 1980.

KENNETH R. MASON,
Secretary.

701-TA-11 (FINAL) THROUGH 701-TA-19 (FINAL) AND 701-TA-22 (FINAL) THROUGH 701-TA-30 (FINAL)

Notice of Scheduling of Hearings in Countervailing Duty Investigations

AGENCY: U.S. International Trade Commission.

ACTION: Scheduling of hearings and other procedural deadlines in countervailing duty investigations with respect to dextrines and soluble or chemically treated starches derived from corn starch or potato starch to determine whether an industry in the United States is materially injured, or is threatened with material injury, or the establishment of an industry in the United States is materially retarded, by reason of subsidized imports.

EFFECTIVE DATE: Immediate.

FOR FURTHER INFORMATION CONTACT: John MacHatton, the supervisory investigator assigned by the Commission to these investigations. Telephone 202-523-0439.

SUPPLEMENTARY INFORMATION: The Commission instituted investigations 701-TA-22 (final) through 701-TA-30 (final) concerning dextrines and other soluble or chemically treated starches derived from potato starch effective February 5, 1980 (45 F.R. 11938, February 22, 1980) pursuant to section 104(a) of the Trade Agreements Act of 1979. That notice incorporated a hearing date and other procedural deadlines. The Commission instituted investigations 701-TA-11 (final) through 701-TA-19 (final) concerning dextrines and soluble or chemically treated starches derived from corn starch effective January 1, 1980 (45 F.R. 3400, January 17, 1980), pursuant to section 102(a)(2) of the Trade Agreements Act of 1979. That notice incorporated a tentative hearing date.

By this notice the Commission establishes a final hearing date and other procedural deadlines in the corn starch investigations to cor-

respond with the dates in the potato starch investigations, which are as follows:

Commission staff report made available to parties	Mar. 21, 1980
Prehearing statements due from parties	Apr. 7, 1980
Hearing	Apr. 9, 1980

The hearing will be held beginning at 10 a.m., e.s.t., in the hearing room of the ITC building, 701 E Street NW., Washington, D.C.

By order of the Commission.

Issued: March 24, 1980.

KENNETH R. MASON,
Secretary.

[19 CFR 207.40]

NONQUOTA CHEESE FROM NORWAY—INVESTIGATION NO. 701-TA-61 (FINAL)

Notice of Termination of Countervailing Duty Investigation

AGENCY: U.S. International Trade Commission.

ACTION: In view of the withdrawal by the petitioner of the petition upon the basis of which the above-captioned investigation was initiated, the Commission hereby terminates such investigation pursuant to section 704(a) of the Tariff Act of 1930.

EFFECTIVE DATE: March 19, 1980.

FOR FURTHER INFORMATION CONTACT: Mr. Robert Eninger, Office of Investigations, telephone 202-523-0312.

SUPPLEMENTARY INFORMATION: The Trade Agreements Act of 1979, subsection 104(a)(1)(C), requires the Commission to conduct countervailing duty investigations in cases where the Commission receives the most current net subsidy information pertaining to any countervailing duty order in effect on January 1, 1980, for which the Secretary of the Treasury has waived the imposition of countervailing duties under section 303(d) of the Tariff Act of 1930, and which applies to merchandise other than quota cheese, which is a product of a country under the agreement. On February 5, 1980, the Commission received such information from the U.S. Department of Commerce regarding nonquota cheese from Norway.

Section 704 of the Tariff Act of 1930 permits the Commission to terminate countervailing duty investigations upon withdrawal of the petition by the petitioner. On March 3, 1980, the Commission received a letter from the National Cheese Institute, the original petitioner for

a countervailing duty order, requesting that its petition in the matter of nonquota cheese from Norway be withdrawn. By this notice the Commission gives notice that it is granting the request of the National Cheese Institute by terminating the investigation of nonquota cheese from Norway.

In addition to publishing this notice in the Federal Register, the Commission is notifying the Department of Commerce of its action in this case.

By order of the Commission:

Issued: March 19, 1980.

KENNETH R. MASON,
Secretary.

U.S. GOVERNMENT PRINTING OFFICE : 1980 O - 315-597

APR 2 1 1980
Item 950-D
T 1.11/3:14/17

Customs Bulletin

Regulations, Rulings, Decisions, and Notices concerning Customs and related matters

and Decisions

of the United States Court of Customs and Patent Appeals and the United States Customs Court

315-598
350

Vol. 14 | APRIL 23, 1980 | No. 17

9247

This issue contains

T.D. 80–97 and 80–98
General Notice
C.D. 4848 through 4850
C.R.D. 80–3
Pro. abstracts P80/41 through P80/46
Reap. abstracts R80/71 through R80/100
International Trade Commission Notice

THE DEPARTMENT OF THE TREASURY
U.S. Customs Service

NOTICE

The abstracts, rulings, and notices which are issued weekly by the U.S. Customs Service are subject to correction for typographical or other printing errors. Users may notify the U.S. Customs Service, Logistics Management Division, Washington, D.C. 20229, of any such errors in order that corrections may be made before the bound volumes are published.

For sale by the Superintendent of Documents, U.S. Government Printing Office, Washington, D.C. 20402. Price: $1.30 (single copy domestic); $1.65 (single copy foreign). Subscription price: $65.00 a year domestic; $81.25 a year foreign.

U.S. Customs Service

Treasury Decisions

(T.D. 80-97)

Foreign Currencies—Daily Rates for Countries Not on Quarterly List

Rates of exchange based on rates certified to the Secretary of the Treasury by the Federal Reserve Bank of New York for the Brazil cruzeiro, People's Republic of China yuan, Hong Kong dollar, Iran rial, Philippines peso, Singapore dollar, Thailand baht (tical), and Venezuela bolivar

The Federal Reserve Bank of New York, pursuant to section 522(c), Tariff Act of 1930, as amended (31 U.S.C. 372(c)), has certified buying rates for the dates and foreign currencies shown below. The rates of exchange, based on these buying rates, are published for the information and use of Customs officers and others concerned pursuant to part 159, subpart C, Customs Regulations (19 CFR 159, subpart C).

Brazil cruzeiro:	
March 17–21, 1980	$0.0214
People's Republic of China yuan:	
March 17, 1980	$0.644413
March 18, 1980	.636780
March 19–21, 1980	.633633
Hong Kong dollar:	
March 17, 1980	$0.197785
March 18, 1980	.196928
March 19, 1980	.197278
March 20, 1980	.198373
March 21, 1980	.197863
Iran rial:	
March 17–21, 1980	Not available
Philippines peso:	
March 17–21, 1980	$0.1350

Singapore dollar:

March 17, 1980	$0.448934
March 18, 1980	.448029
March 19, 1980	.447227
March 20, 1980	.448029
March 21, 1980	.446828

Thailand baht (tical):

March 17–21, 1980	$0.0489

Venezuela bolivar:

March 17–21, 1980	$0.2329

[LIQ-3-TRODE]

Dated: April 2, 1980.

G. SCOTT SHREVE
(For Chester R. Krayton,
Director, Duty Assessment Division).

(T.D. 80–98)

Foreign Currencies—Variances From Quarterly Rate

Rates of exchange based upon rates certified to the Secretary of the Treasury by the Federal Reserve Bank of New York

The following rates of exchange are based upon rates certified to the Secretary of the Treasury by the Federal Reserve Bank of New York, pursuant to section 522(c), Tariff Act of 1930, as amended (31 U.S.C. 372(c)), and reflect variances of 5 per centum or more from the quarterly rate published in T.D. 80–28 for the following countries. Therefore, as to entries covering merchandise exported on the dates listed, whenever it is necessary for Customs purposes to convert such currency into currency of the United States, conversion shall be at the following rates:

Austria schilling:

March 17, 1980	$0.074391
March 18, 1980	.074627
March 19, 1980	.074349
March 20, 1980	.074850
March 21, 1980	.074405

Belgium franc:

March 17, 1980	$0.032895
March 18, 1980	.032808
March 19, 1980	.033102
March 20, 1980	.033190
March 21, 1980	.032949

Denmark krone:	
March 17, 1980	$0.170794
March 18, 1980	.170619
March 19, 1980	.171394
March 20, 1980	.171571
March 21, 1980	.170068
Finland markka:	
March 17, 1980	$0.256049
March 18, 1980	.255787
March 19, 1980	.255918
March 20, 1980	.256674
March 21, 1980	.256180
France franc:	
March 17, 1980	$0.228598
March 18, 1980	.228050
March 19, 1980	.228781
March 20, 1980	.229938
March 21, 1980	.229095
Germany deutsche mark:	
March 17, 1980	$0.533618
March 18, 1980	.532765
March 19, 1980	.533903
March 20, 1980	.536049
March 21, 1980	.532481
Ireland pound:	
March 17, 1980	$1.9725
March 18, 1980	1.9705
March 19, 1980	1.9750
March 20, 1980	1.9900
March 21, 1980	1.9795
Italy lira:	
March 17, 1980	$0.001145
March 18, 1980	.001140
March 19, 1980	.001144
March 20, 1980	.001149
March 21, 1980	.001144
Netherlands guilder:	
March 17, 1980	$0.485673
March 18, 1980	.485791
March 19, 1980	.486500
March 20, 1980	.488568
March 21, 1980	.486381

Spain peseta:	
March 17, 1980	$0.014312
March 18, 1980	.014316
March 19, 1980	.014368
March 20, 1980	(*)
March 21, 1980	.014302
Sweden krona:	
March 17, 1980	$0.227350
March 18, 1980	.227583
March 19, 1980	.228206
March 20, 1980	.228571
March 21, 1980	.227739
Switzerland franc:	
March 17, 1980	$0.559284
March 18, 1980	.561482
March 19, 1980	.563857
March 20, 1980	.567601
March 21, 1980	.562114

*Rate did not vary this date. Use quarterly rate.

[LIQ-3-TRODE]

Dated: April 2, 1980.

G. Scott Shreve
(For Chester R. Krayton,
Director, Duty Assessment Division).

U.S. Customs Service

General Notice

AGENCY: U.S. Customs Service, Department of the Treasury.

ACTION: General notice.

SUMMARY: This document advises that public comments received by Customs in response to a notice pubished in the Federal Register on October 10, 1979 (44 F.R. 58575), relating to Customs regulatory reporting requirements, are currently under review. If it is determined that further action to modify, simplify, or eliminate any reporting requirements is required, a subsequent notice will be published in the Federal Register.

FOR FURTHER INFORMATION CONTACT: Lawrence P. Dunham, Regulations and Research Division, U.S. Customs Service, 1301 Constitution Avenue NW., Washington, D.C. 20229; 202-566-8237.

SUPPLEMENTARY INFORMATION:

BACKGROUND

As part of an ongoing reporting reduction program, Customs published a notice in the Federal Register on October 10, 1979 (44 F.R. 58575), advising that it was reviewing its regulatory reporting requirements to insure that they were meaningful. In order to determine which reports were necessary, which could be modified or simplified so as to obtain the same information in a less burdensome manner, and which were achieving the policy goals for which they were established, interested persons were invited to submit written comments concerning those reporting requirements which they considered in need of revision or elimination, or which were difficult to understand or costly to comply with.

The five comments received in response to that notice currently are being reviewed. If it is determined on the basis of Customs review that changes to any reporting requirements are necessary, another notice, describing the specific reporting requirements, proposed changes, and requesting additional comments will be published in the Federal Register.

Because public participation in the regulatory review process is of substantial assistance in the ongoing reporting reduction program, Customs will from time to time publish notices in the Federal Register requesting comments concerning its reporting requirements, its forms, and the data required by those forms.

Dated: April 4, 1980.

WILLIAM T. ARCHEY,
Commissioner of Customs.

(521414)

Notice That the Customs Service is Soliciting Public Comments on a Proposal to Incorporate by Reference Riders to all Term Bonds in the Automated Bond Information System

AGENCY: U.S. Custom Service, Department of the Treasury.

ACTION: Notice requesting public comments.

SUMMARY: This document gives notice that the Customs Service has under consideration a proposal which would amend each of the term bonds currently in the automated bond information system (ABIS), to permit the addition of any of the approved ABIS bond riders when a bond is submitted to a district director of Customs.

DATES: Comments must be received on or before (60 days from the date of publication in the Federal Register).

ADDRESS: Comments should be addressed to the Commissioner of Customs, attention: Regulations and Research Division, 1301 Constitution Avenue NW., Washington, D.C. 20229.

FOR FURTHER INFORMATION CONTACT: William G. Rosoff, Carriers, Drawback and Bonds Division, U.S. Customs Service, 1301 Constitution Avenue NW., Washington, D.C. 20229; 202-566-5856.

SUPPLEMENTARY INFORMATION:

BACKGROUND

It is generally held that an insurance contract with an attached rider, in which the contract and rider refer to each other, constitute a single agreement. However, bonds in the automated bond information system (ABIS) do not refer to their bond riders. Although a rider may refer to a bond, it does not become part of the contract simply by being fastened to the bond. An intent to treat the rider as being part of the bond can be shown by having the parties to the bond sign the rider.

However, the acceptance of ABIS bond and bond rider packages in which only the bond itself is properly signed may affect the validity of the rider, thus rendering the transaction covered by the rider unsecured. Moreover, the acceptance of ABIS bond and bond rider packages in which only the bond is properly signed is administratively burdensome to Customs inasmuch as ABIS computer printouts do not show how the bond or any rider was signed. Consequently, Customs requires that principals on all ABIS bonds sign and, in the case of corporate principals, authenticate the signature on all riders, whether submitted with the bond or separately.

To insure uniformity in the acceptance of persons submitting such packages, the Customs Service is considering the addition of language to all ABIS bond forms to allow principals on these bonds to incorporate by reference any of the approved ABIS bond riders when a bond is submitted to the district director of Customs in accordance with section 113.26, Customs Regulations (19 CFR 113.26). Principals would add a rider or riders simply by indicating in the space provided on the bond form the appropriate letter of the rider and the corresponding Treasury decision number or headquarters memorandum which incorporates the text of the rider. The approved ABIS bond riders are set forth in T.D. 73–198 (riders A–L), T.D. 73–284 (rider M), T.D. 73–329 (rider N), T.D. 76–246 (rider O), T.D. 78–140 (rider P), and headquarters memorandum, dated November 20, 1978, BON–3–O:D:EAO (rider R).

Principals on ABIS bonds would continue to have the option of adding one or more riders during the term of the underlying bond by submitting a signed and authenticated bond rider and bond transcript, Customs form 53, to the district director who approved the bond.

PROPOSED ACTION

Under Customs proposal the following language would be added to each ABIS bond form immediately after the last whereas clause and before the list of conditions:

> Whereas, the above-bounden principal expects to engage in activities covered by the following bond riders □□□□□□□□□□□□ set forth in _____;
>
> Whereas, the principal and surety intend to be bound to the same extent as if they had executed each of the listed riders;

The following language would be added after the last condition and immediately before the phrase "then this obligation shall be void; * * *":

> If the above-bounden principal complies with every condition and obligation contained in each listed bond rider in connection with the principal's activities;

315-598 O - 80 - 2

COMMENTS

The Customs Service invites written comments (preferably in triplicate) on its proposal to amend all ABIS bond forms to permit the addition of any of the approved bond riders when a bond is submitted to a district director of Customs, and what changes, if any, should be made.

All comments received in response to this notice will be available for public inspection in accordance with section 103.8(b), Customs Regulations (19 CFR 103.8(b)), during regular business hours at the Regulations and Research Division, Headquarters, U.S. Customs Service, 1301 Constitution Avenue NW., Washington D.C. 20229.

DRAFTING INFORMATION

The principal author of this notice was James A. Seal, Regulations and Research Division, Office of Regulations and Rulings, U.S. Customs Service. However, personnel from other offices within the Customs Service participated in its development.

Dated: April 2, 1980.

HARVEY B. FOX,
Acting Director, Office of Regulations and Rulings.

Decisions of the United States Customs Court

United States Customs Court

One Federal Plaza
New York, N.Y. 10007

Chief Judge

Edward D. Re

Judges

Paul P. Rao
Morgan Ford
Scovel Richardson
Frederick Landis
James L. Watson
Herbert N. Maletz
Bernard Newman
Nils A. Boe

Senior Judge

Samuel M. Rosenstein

Clerk

Joseph E. Lombardi

Customs Decisions

(C.D. 4848)

ARMSTRONG BROS. TOOL CO.; BERGMAN TOOL MANUFACTURING CO., INC.; DURO METAL PRODUCTS COMPANY; MILWAUKEE TOOL & EQUIPMENT CO., INC.; PROLO TOOLS DIVISION, INGERSOLL RAND COMPANY; WARREN TOOL CORPORATION; WILSON TOOL DIVISION OF WILTON CORPORATION; AND WOODINGS-VERONA TOOL WORKS, PLAINTIFFS *v.* UNITED STATES (GREAT NECK SAW MANUFACTURING, INCORPORATED, PARTY-IN-INTEREST), DEFENDANT

On Plaintiffs' Motion and Government's Cross-Motion for Summary Judgment

Court No. 77-8-02004

[Plaintiffs' motion denied; Government's cross-motion granted.]

(Dated March 27, 1980)

Frederick L. Ikenson, Esq., for the plaintiffs.

Alice Daniel, Assistant Attorney General, *David M. Cohen*, Director, Commercial Litigation Branch, *Joseph I. Liebman*, Attorney in Charge, Field Office for Customs Litigation, and *Sidney N. Weiss*, trial attorney, Esqs., for the defendant.

NEWMAN, Judge:

INTRODUCTION

This is an American manufacturers' action brought pursuant to 28 U.S.C. 1582(b) (1976), 28 U.S.C. 2632(a) (1976), and 19 U.S.C. 1516(c) (1976), involving the Antidumping Act of 1921, as amended (19 U.S.C. 160, et seq. (1970)) (Antidumping Act).

Plaintiffs, domestic manufacturers, and/or wholesalers of certain nonpowered handtools (viz, chisels, punches, hammers and sledges, vises, C-clamps, and battery service tools), contest the negative injury determination of the U.S. International Trade Commission (Commission) in investigation No. AA1921-149 (40 F.R. 57517 (1975)) and the action of the Department of the Treasury (Treasury) in amending its determination of sales at less than fair value (LTFV) (40 F.R. 49111 (1975)). Great Neck Saw Manufacturing, Inc., made a party in interest pursuant to 19 U.S.C. 1516(c) (1976),[1] is the consignee in New York Seaport entry No. 77-471887 of July 20, 1977, and the importer of handtools falling within the class or kind of merchandise involved in this action imported without assessment of antidumping duties.

This action is presently before me on plaintiffs' motion and the Government's cross-motion for summary judgment. After careful consideration of the voluminous administrative record and the comprehensive memoranda of law submitted by counsel, I have concluded that no genuine triable issue of fact is presented in this case, and that defendant is entitled to summary judgment dismissing this action.

BACKGROUND

The highlights of the administrative history of this action are undisputed, and may be briefly summarized:

1. On September 5, 1974, an antidumping proceeding notice issued by Treasury was published in the Federal Register (39 F.R. 32159),

[1] Under 19 U.S.C. 1516(f) (1976), the consignee or his agent has the right to appear and be heard as a party in interest in an action brought by an American manufacturer pursuant to sec. 1516. In the present case, however, the party in interest, Great Neck Saw Manufacturing, Inc., did not file any papers in connection with the present cross-motions.

advising that an investigation was being instituted to determine whether certain nonpowered handtools from Japan, including chisels, punches, hammers and sledges, vises, C-clamps, and battery service tools, were being or were likely to be sold at LTFV.

2. On June 5, 1975, a withholding of appraisement notice was issued by Treasury and published in the Federal Register (40 F.R. 24218). Included among the handtools covered were chisels, punches, hammers and sledges (with or without handles), vises, C-clamps, and battery service tools, other than specific hand and battery service tools, from certain Japanese sources. In the notice, battery service tools were stated to include "battery terminal lifters, battery post and terminal cleaning brushes, battery terminal spreaders, angle-nose pliers, booster cables, and battery service kits (terminal puller, cleaning brush, and two terminals)."

3. On September 5, 1975, a determination of sales at LTFV covering "Certain Nonpowered Handtools from Japan" was issued by Treasury and published in the Federal Register (40 F.R. 41155). Included among the handtools covered were chisels, punches, hammers and sledges (with or without handles), vises, C-clamps, and battery service tools, other than specific hand and battery service tools, from certain Japanese sources. The term "battery service tools," was defined in the same manner as it was in the withholding of appraisement notice.

4. Thereafter, on September 10, 1975, the Commission instituted investigation No. AA1921-149 for the purpose of determining whether an industry in the United States was being or was likely to be injured, or prevented from being established, by reason of sales at LTFV. On September 15, 1975, the Commission published in the Federal Register its notice of investigation and public hearing (to be held on October 2, 1975) and included in such notice the same definition of battery service tools used by Treasury in its withholding of appraisement notice and its determination of sales at LTFV (40 F.R. 42607). A notice rescheduling the hearing from October 2 to October 22, 1975, was published by the Commission in the Federal Register on September 24, 1975 (40 F.R. 43956). The hearing was held on October 22 and 23, 1975.

5. On October 21, 1975, Treasury published in the Federal Register an amendment of determination of sales at LTFV by eliminating from the scope of its original determination all battery service tools other than battery terminal lifters (40 F.R. 49111).

6. The Commission, on October 23, 1975 (second day of the hearing), amended the scope of its investigation to make it correspond with the new advice received from Treasury, and on October 29, 1975, published in the Federal Register notice of the amendment of the investigation (40 F.R. 50320).

7. The Commission unanimously reached a negative decision (viz, it determined that an industry in the United States is not being or is not likely to be injured, or is not prevented from being established, by reason of the sales at LTFV). The decision together with a statement of reasons was published in the Federal Register on December 10, 1975 (40 F.R. 57517). In arriving at its determination, the Commission gave due consideration to written submissions from interested parties, evidence adduced at the hearing, and all factual information obtained by the Commission's staff from questionnaires, personal interviews, and other sources.

No question has been raised concerning plaintiffs' compliance with the administrative prerequisites to the initiation of a civil action prescribed by 19 U.S.C. 1516 (a) and (c).

Pursuant to plaintiffs' motion and over defendant's objection, I entered an order that the Secretary of the Commission prepare and transmit to the clerk of the court, on or before September 25, 1978, the following: (1) A certified copy of the transcript of proceedings and exhibits introduced before the Commission in investigation No. AA1921–149; (2) certified copies of all written submissions, questionnaires, reports, and all other documents relating to investigation No. AA1921–149; and (3) all other things in the files of the Commission relating to the investigation.[2]

Pursuant to the foregoing order, as modified, the Secretary of the Commission transmitted what are represented to be all of the documents and things enumerated and described above that were locatable,[3] with the exception of the one document which was claimed by the Commission Chairman to be privileged.[4]

STATUTES INVOLVED

The statutory provisions relevant to this action are:

Section 201, Antidumping Act of 1921, as amended, 19 U.S.C. 160 (1970):

> *Initiation of investigation; injury determination; findings; withholding appraisement; publication in Federal Register.*
>
> (a) Whenever the Secretary of the Treasury (hereinafter called the Secretary) determines that a class or kind of foreign merchandise is being, or is likely to be, sold in the United States

[2] This was an unpublished order entered on July 26, 1978. In a similar published order entered in a companion case, it was stated that the order was to enable the court to determine whether the Commission's finding of injury was "among other things, arbitrary, an abuse of discretion, or otherwise contrary to law." *Armstrong Bros. Tool Co. et al.* v. *United States, etc.*, 80 Cust. Ct. 252, C.R.D. 78-5 (1978). The July 26, 1978, order in the instant case was modified by a stipulation for a protective order entered on Aug. 28, 1978.

[3] These documents and things, comprising the massive administrative record, are listed on two numbered indexes, which were also transmitted to the court, entitled "List No. 1 Public Documents Transmitted to the United States Customs Court," and "List No. 2, Confidential Documents Transmitted to the United States Customs Court." Public documents are identified on list No. 1, while those documents which the Commission treated as containing confidential business information and which are subject to the terms of of the stipulation for protective order are identified on list No. 2.

[4] This claim of privilege was sustained by the court in an unpublished order entered on Dec. 29, 1978.

or elsewhere at less than its fair value, he shall so advise the U.S. Tariff Commission, and the said Commission shall determine within three months thereafter whether an industry in the United States is being or is likely to be injured, or is prevented from being established, by reason of the importation of such merchandise into the United States. The said Commission, after such investigation as it deems necessary, shall notify the Secretary of its determination, and, if that determination is in the affirmative, the Secretary shall make public a notice (hereinafter in secs. 160 to 171 of this title called a finding) of his determination and the determination of the said Commission. For the purposes of this subsection, the said Commission shall be deemed to have made an affirmative determination if the Commissioners of the said Commission voting are evenly divided as to whether its determination should be in the affirmative or in the negative. The Secretary's finding shall include a description of the class or kind of merchandise to which it applies in such detail as he shall deem necessary for the guidance of customs officers.

(b) Whenever, in the case of any imported merchandise of a class or kind as to which the Secretary has not so made public a finding, the Secretary has reason to believe or suspect, from the invoice or other papers or from information presented to him or to any person to whom authority under this section has been delegated, that the purchase price is less, or that the exporter's sales price is less or likely to be less, than the foreign market value (or, in the absence of such value, than the constructed value), he shall forthwith publish notice of that fact in the Federal Register and shall authorize, under such regulations as he may prescribe, the withholding of appraisement reports as to such merchandise entered, or withdrawn from warehouse, for consumption, not more than 120 days before the question of dumping has been raised by or presented to him or any person to whom authority under this section has been delegated, until the further order of the Secretary, or until the Sectetary has made public a finding as provided for in subdivision (a) in regard to such merchandise.

(c) The Secretary, upon determining whether foreign merchandise is being, or is likely to be, sold in the United States at less than its fair value, and the U.S. Tariff Commission, upon making its determination under subsection (a) of this section, shall each publish such determination in the Federal Register, with a statement of the reasons therefor, whether such determination is in the affirmative or in the negative.

Section 202(a), Antidumping Act of 1921, as amended, 19 U.S.C. 161(a) (1970):

Amount of duty to be collected; determination of foreign market value of goods.

(a) In the case of all imported merchandise, whether dutiable or free of duty, of a class or kind as to which the Secretary of the Treasury has made public a finding as provided for in section 160 of this title, entered, or withdrawn from warehouse, for consumption, not more than 120 days before the question of

dumping was raised by or presented to the Secretary or any person to whom authority under said section has been delegated and as to which no appraisement has been made before such finding has been so made public, if the purchase price or the exporter's sales price is less than the foreign market value (or, in the absence of such value, than the constructed value) there shall be levied, collected, and paid, in addition to any other duties imposed thereon by law, a special dumping duty in an amount equal to such difference.

Section 516, Tariff Act of 1930, as amended, 19 U.S.C. 1516 (1976):

Petitions by American manufacturers, producers, or wholesalers.

(a) Classification, rate of duty, countervailing duty, and antidumping duty furnished upon request; petition; contents.

The Secretary shall, upon written request by an American manufacturer, producer, or wholesaler, furnish the classification, the rate of duty, the additional duty described in section 1303 of this title (hereinafter in this section referred to as countervailing duties), if any, and the special duty described in section 161 of this title (hereinafter in this section referred to as antidumping duties), if any, imposed upon designated imported merchandise of a class or kind manufactured, produced, or sold at wholesale by him. If such manufacturer, producer, or wholesaler believes that the appraised value is too low, that the classification is not correct, that the proper rate of duty is not being assessed, or that countervailing duties or antidumping duties should be assessed, he may file a petition with the Secretary setting forth (1) a description of the merchandise, (2) the appraised value, the classification, or the rate or rates of duty that he believes proper, and (3) the reasons for his belief including, in appropriate instances, the reasons for his belief that countervailing duties or antidumping duties should be assessed.

(b) Determination of petition; notification to petitioner; procedures for countervailing duties and antidumping duties.

If, after receipt and consideration of a petition filed by an American manufacturer, producer, or wholesaler, the Secretary decides that the appraised value of the merchandise is too low, that the classification of the article or rate of duty assessed thereon is not correct, or that countervailing duties or antidumping duties should be assessed, he shall determine the proper appraised value or classification, rate of duty, or countervailing duties, or antidumping duties and shall notify the petitioner of his determination. Except for countervailing duty and antidumping duty purposes, all such merchandise entered for consumption or withdrawn from warehouse for consumption more than 30 days after the date such notice to the petitioner is published in the weekly CUSTOMS BULLETIN shall be appraised or classified or assessed as to rate of duty in accordance with the Secretary's determination. For countervailing duty purposes, the procedures set forth in section 1303 of this title shall apply. For antidumping duty purposes, the procedures set forth in section 160 of this title shall apply.

(c) Determination of correctness of initial appraised value, classification, rate of duty, or nonassessment of countervailing duties or antidumping duties; contest by petitioner; procedure.

If the Secretary decides that the appraised value or classification of the articles or the rate of duty with respect to which a petition was filed pursuant to subsection (a) of this section is correct, or that countervailing duties or antidumping duties should not be assessed, he shall so inform the petitioner. If dissatisfied with the decision of the Secretary, the petitioner may file with the Secretary, not later than 30 days after the date of the decision, notice that he desires to contest the appraised value or classification of, or rate of duty assessed upon or the failure to assess countervailing duties or antidumping duties upon, the merchandise. Upon receipt of notice from the petitioner, the Secretary shall cause publication to be made of his decision as to the proper appraised value or classification or rate of duty or that countervailing duties or antidumping duties should not be assessed and of the petitioner's desire to contest, and shall thereafter furnish the petitioner with such information as to the entries and consignees of such merchandise, entered after the publication of the decision of the Secretary at such ports of entry designated by the petitioner in his notice of desire to contest, as will enable the petitioner to contest the appraised value or classification of, or rate of duty imposed upon or failure to assess countervailing duties or antidumping duties upon, such merchandise in the liquidation of one such entry at such port. The Secretary shall direct the appropriate Customs officer at such ports to notify the petitioner by mail immediately when the first of such entries is liquidated.

(d) Contest of Secretary's determination that foreign merchandise is not being sold in United States at less than fair value or that bounty or grant is not being paid.

Within 30 days after a determination by the Secretary—

(1) under section 160 of this title, that a class or kind of foreign merchandise is not being, nor likely to be, sold in the United States at less than its fair value, or

(2) under section 1303 of this title that a bounty or grant is not being paid or bestowed,

an American manufacturer, producer, or wholesaler of merchandise of the same class or kind as that described in such determination may file with the Secretary a written notice of a desire to contest such determination. Upon receipt of such notice the Secretary shall cause publication to be made thereof and of such manufacturer's, producer's, or wholesaler's desire to contest the determination. Within 30 days after such publication, such manufacturer, producer, or wholesaler may commence an action in the U.S. Customs Court contesting such determination.

(e) Appraisal, classification, and liquidation of entries of merchandise covered by published decisions of the Secretary.

Notwithstanding the filing of an action pursuant to section 2632 of title 28, merchandise of the character covered by the

315-598 O - 80 - 3

published decision of the Secretary (when entered for consumption or withdrawn from warehouse for consumption on or before the date of publication of a decision of the U.S. Customs Court or of the U.S. Court of Customs and Patent Appeals, not in harmony with the published decision of the Secretary) shall be appraised or classified, or both, and the entries liquidated, in accordance with the decision of the Secretary and, except as otherwise provided in this chapter, the final liquidations of these entries shall be conclusive upon all parties.

(f) Consignee or his agent as party in interest before the Customs Court.

The consignee or his agent shall have the right to appear and to be heard as a party in interest before the U.S. Customs Court.

(g) Appraisement, classification, and assessment of duty of merchandise covered by published decision of the Secretary in accordance with final judicial decision of Customs Court or Court of Customs and Patent Appeals sustaining cause of action in whole or in part; suspension of liquidation of entries

If the cause of action is sustained in whole or in part by a decision of the U.S. Customs Court or of the U.S. Court of Customs and Patent Appeals, merchandise of the character covered by the published decision of the Secretary, which is entered for consumption or withdrawn from warehouse for consumption after the date of publication of the court decision, shall be subject to appraisement, classification, and assessment of duty in accordance with the final judicial decision in the action, and the liquidation of entries covering the merchandise so entered or withdrawn shall be suspended until final disposition is made of the action, whereupon the entries shall be liquidated, or if necessary, reliquidated in accordance with the final decision.

(h) Regulations implementing required procedures.

Regulations shall be prescribed by the Secretary to implement the procedures required under this section.

PLAINTIFFS' CONTENTION

Plaintiffs contend that Treasury's amendment of its determination of sales at LTFV so as to exclude from the term "battery service tools" all tools other than battery terminal lifters after transmittal of the investigation to the Commission was ultra vires. Further, plaintiffs claim that the Commission erred as a matter of law by eliminating from the class or kind of merchandise under investigation all battery service tools other than battery terminal lifters; and that the Commission's negative determination is arbitrary, capricious, and not supported by substantial evidence. Hence, plaintiffs seek an order setting aside the Commission's negative injury determination and directing Treasury to publish a finding of dumping with the result that antidumping duties will be assessed, where appropriate, on entries of the subject hand tools from Japan.

GOVERNMENT'S CONTENTION

The Government contends that the court is limited to a review of the Commission's statement of reasons in deciding whether the Commission's determination is arbitrary, capricious, or otherwise contrary to law. Relying upon the foregoing scope and standard of review, defendant urges that the Commission, in its statement of reasons, applied proper legal criteria and considered appropriate indicia of injury, and therefore its determination is not arbitrary, capricious, or otherwise contrary to law. Moreover, defendant maintains that in any event, the Commission's determination is supported by the administrative record, as transmitted to the court. Finally, defendant insists that Treasury acted lawfully in amending its LTFV determination.

ISSUES PRESENTED

1. Whether the Commission's negative injury determination is arbitrary, capricious, or otherwise contrary to law.

2. Whether Treasury's amendment of its LTFV determination after transmittal to the Commission of the antidumping investigation was ultra vires.

OPINION

I

For the scope and standard of review applicable to the Commission's injury determinations see my recent opinion in *Armstrong Bros. Tool Co. et al.* v. *United States* (*Daido Corporation, Steelcraft Tools Division, Party-in-Interest*), 84 Cust. Ct. —, C.D. 4838 (1980), *appeal pending* (*Armstrong I*), and cases cited therein. See also *SCM Corporation* v. *United States* (*Brother International Corporation, Party-in-Interest*), 84 Cust. Ct. —, C.R.D. 80–2 (1980). In the present case, following the rationale of *Armstrong I*, I have carefully reviewed the entire administrative record transmitted to the court, and do not find the Commission's determination to be arbitrary, capricious, or otherwise contrary to law, as claimed by plaintiffs. Moreover, I am unable to agree with plaintiffs' contention that the Commission's determination is not supported by substantial evidence.

In *Armstrong I*, I emphasized the intent of Congress to provide the Commission with a wide latitude within which to determine the existence or nonexistence of injury under the Antidumping Act, and discussed the indicia of injury generally considered by the Commission in its investigations. From the Commission's statement of reasons in the instant case, it is evident that the Commission considered and carefully analyzed a number of pertinent economic and financial factors, including domestic industry shipments, exports, profits, prices, unfilled orders, and other relevant factors. Thus, in its statement of reasons, the Commission found:

First:

> *U.S. industry.*—The U.S. industry most likely to be adversely affected by imports sold at LTFV consists of the facilities in the United States devoted to the production of chisels, punches, hammers and sledges (with or without handles), vises, C-clamps, and battery terminal lifters. These articles are produced at plants located throughout the United States, and are sold primarily to industrial-commercial distributors, hardware wholesalers and cooperatives, automotive-service-market wholesalers, and several mass-merchandise retail chains.

Second: The markets in the United States for the domestic tools and the Japanese tools are different. On this aspect,the Commission found:

> *The imported articles.*—The tools imported from Japan are generally limited to the hardware wholesale and mass-merchandise retail markets. The evidence developed during the investigation indicates that imports, overall, are of somewhat lower quality and sell at commensurately lower prices, making such imports generally more suitable for sale in retail outlets primarily serving the occasional user. By contrast, the tools produced by domestic manufacturers are sold primarily for use in industry, by professional tradespeople, and by skilled craftsmen.

Third: The Commission found that the market penetration by the imports which occurred did not result from LTFV sales:

> *Import penetration and lost sales.*—Import market penetration remained at about 6 percent during 1972–74, a period which includes Treasury's investigation, April 1–September 30, 1974. Although imports from Japan increased more rapidly in the first 8 months of 1975 than in the preceding 3 years, *the increase can be largely attributed to imports of vises which were the result of orders placed in Japan because of the inability of the domestic producers to meet increased demand on time.* [Italic added.]

Fourth: The Commission could find no substantiation for the domestic industries' allegations of lost sales. Any lost sales were attributable to factors other than LTFV sales:

> It was established during the investigation that some domestic distributors of the tools under consideration have either turned to Japanese imports or increased such imports because of the difficulties experienced by domestic producers in making shipments during recent raw materials shortages. Other alleged losses of sales by domestic producers to imports were not substantiated; the firms involved have, in fact, been importing or purchasing imported Japanese tools for more than a decade and have not significantly increased such purchases during the period of the investigation. Several distributors indicated that their reason for accepting imported tools was to widen the selection to their dealers in terms of range of quality and price. The Commission could not corroborate allegations that the domestic industry had lost sales of the subject articles because of LTFV sales of certain Japanese imports.

Fifth: Despite the LTFV import sales, domestic shipments and exports of the handtools under consideration rose in line with increased domestic demand in the period investigated (1971–74), and exports of such tools by domestic producers increased during the same period. This increase in demand for domestic tools resulted in higher unfilled orders during 1972–74, reflecting the domestic producers' difficulty in meeting the increased demand. The decline of U.S. shipments and exports in the first 8 months of 1975 was attributable to factors unrelated to the LTFV imports:

> The decline in U.S. shipments in the first 8 months of 1975 slightly exceeded the decline in apparent domestic consumption, reflecting the greater sensitivity of the generally higher quality, higher priced domestic tools to the reduced industrial activity in the United States. The decline in exports in the first 8 months of 1975 appears to reflect the economic recession in industrial countries abroad.

Sixth: When the effect of LTFV sales on prices was investigated, the Commission found no evidence of price suppression or depression, and the data obtained in the investigation showed that prices for domestic and imported tools increased consistently for several years.

Seventh: It was further found that profitability and employment were not adversely affected by the LTFV sales:

> *Profitability and employment.*—The financial data of the domestic industry, as reported to the Commission, indicate increased net sales of chisels, punches, hammers, sledges, vises, and C-clamps during 1972–74. The ratio of net operating profit to net sales of these tools remained at about 9 percent in 1972 and 1973. The rise in production costs during 1974 occurred faster than the domestic producers could raise their prices, creating a temporary decline in profits during that period. However, this situation reversed during 1975, when the profits were higher than in previous years.
>
> Employment and man-hours in the domestic industry increased throughout the period 1971–74. Although employment declined slightly in the first 8 months of 1975, total man-hours worked continued to increase.

Finally: The Commission found no likelihood of injury:

> *No likelihood of injury.*—The evidence obtained for the period of the investigation also indicates that there is no likelihood of injury to the domestic industry within the meaning of the Antidumping Act, 1921, as amended. In 1974, U.S. shipments increased at a greater rate than imports from Japan. With the exception of vises, imports of the tools under consideration declined in the first 8 months of 1975. It is reasonable to expect that U.S. shipments will increase with improvement in overall economic activity. The latest data on the profitability of the domestic industry show no evidence of future injury.

From the economic and financial criteria applied and the facts and circumstances delineated in the Commission's statement of reasons, the Commission adequately demonstrated that the domestic industry was neither injured nor was likely to be injured by reason of the LTFV imports. There is no indication that an incorrect legal standard or any unreasonable criteria of injury were utilized. Thus, from the Commission's statement of reasons I am not persuaded that the determination was arbitrary and capricious, as claimed by plaintiffs.

Indeed, plaintiffs do not contend that the criteria of injury employed by the Commission were arbitrary and capricious. Rather, plaintiffs maintain that "(i)t was erroneous as a matter of law for the Commission not to have reached an affirmative injury determination in light of the severe margins of dumping, the consequential unfair competitive advantage enjoyed by the LTFV imports, and the significant levels of market penetration, particularly when said penetration was accomplished through the competitive leverage created via the LTFV pricing and was accompanied by severe market disruptions." (Memorandum, at 14.) These "market disruptions," plaintiffs argue, are supported by evidence in the record of high and rising market penetration of the imported tools which caused serious declines in domestic industry profits, lost sales, price suppression, sharp declines in domestic production and shipments, and sharp curtailment in investment in industrial capacity. Plaintiffs further urge that the record shows that the sales of the LTFV Japanese handtools have precluded the entry of certain domestic producers into the low-quality, low-price handtools market. Last, plaintiffs characterize the Commission's finding of a lack of competition between the LTFV imports and the domestically produced handtools as one of the critical deficiencies in the Commission's decision. In short, plaintiffs insist that had the Commission concluded that the LTFV imports competed directly with the domestic handtools, it would have been obligated to find, as a matter of law, that an industry in the United States was being or was likely to be injured.

It is evident that plaintiffs' arguments essentially challenge discretionary findings by the Commission. Fundamentally, it is not the function of the court in reviewing an injury determination of the Commission under the Antidumping Act to weigh the evidence or substitute its judgment for that of the Commission. *City Lumber Co. et al.* v. *United States*, 59 CCPA 89, C.A.D. 1045, 457 F. 2d 991 (1972); *Imbert Imports, Inc., et al.* v. *United States*, 60 CCPA 123, C.A.D. 1094, 475 F. 2d 1189 (1973). Moreover, since the Commission based its determination on a consideration of appropriate indicia of injury, absent any clear error of judgment (and I find none), the Commission's determination cannot be regarded as arbitrary or capricious. *Bowman Transportation, Inc.* v. *Arkansas-Best Freight System, Inc., et al.*

419 U.S. 281, 285 (1974), *reh. denied*, 420 U.S. 956 (1975); *Citizens to Preserve Overton Park, Inc., et al.* v. *Volpe, Secretary of Transportation, et al.*, 401 U.S. 402, 416 (1971).

Addressing the question of the scope and extent of judicial power to set aside the ruling of an administrative agency, the Court of Appeals made this relevant observation in *Deutsch* v. *United States Atomic Energy Commission*, 401 F. 2d 404, 407 (C.A.D.C. 1968):

> We are urged to overrule the (Atomic Energy) Commission's holding that petitioner is not entitled to an award upon the ground that this conclusion is arbitrary and capricious and lacks substantial evidence in the record supporting or justifying this ruling. We were told, moreover, on oral argument that the factual basis for the Commission's holding is clearly and completely erroneous as a matter of scientific knowledge and phenomenon. The briefs and supporting documents filed by both parties are extensively devoted to presentation and argument as to the correctness, or the falsity of scientific principles related to radioactive material and products, atomic energy, irradiation, and the nucleus of the atom, and the action and reaction of its protons and neutrons. We are therefore confronted at the very threshold of this case with the ever-recurring question of the scope and extent of our authority to set aside the ruling of an administrative agency. Despite our daily diet of challenges to administrative agency action and our resulting repeated efforts to articulate the limits of judicial review of such actions we nevertheless are continually called upon to substitute our judgment on factual issues for that of the agency charged by Congress with the initial responsibility of making, evaluating, and acting upon those facts. *It is well settled that the factfinding function is within the exclusive province of the administrative agency.* We appear unable to establish a substantial recognition at the bar that "[*t*]*he judicial function is exhausted when there is found to be a rational basis for the conclusions approved by the administrative body.*" *Rochester Telephone Corp.* v. *United States*, 307 U.S. 125, at 146, 59 S. Ct. 754, at 765, 83 L. Ed. 1147 (1939). [Italic added; footnote omitted.]

See also the recent opinion of Judge Maletz in *Pasco Terminals, Inc.* v. *United States*, 83 Cust. Ct.—, C.D. 4823, 477 F. Supp. 201 (1979), *appeal pending*, wherein the court addressed the discretionary authority of the Commission in injury determinations under the Antidumping Act and the applicable standard of judicial review.

In light of the above-cited authorities, it would be impermissible for me to substitute my judgment for that of the Commission or to reweigh the evidence as to specific factual findings. After a careful and searching review of the administrative record, I hold that the findings of the Commission discussed above have a rational basis in fact and are supported by substantial evidence.

That plaintiffs might be able to draw conclusions from the record inconsistent with those reached by the Commission does not mean that the Commission's determination is not supported by "substantial

evidence." As observed by the Supreme Court in *Consolo* v. *Federal Maritime Commission et al.*, 383 U.S. 607, 620 (1966):

> * * * the possibility of drawing two inconsistent conclusions from the evidence does not prevent an administrative agency's finding from being supported by substantial evidence. *Labor Board* v. *Nevada Consolidated Copper Corp.*, 316 U.S. 105, 106; *Keele Hair & Scalp Specialists, Inc.* v. *FTC*, 275 F. 2d 18, 21.

It is emphasized that in deciding whether the Commission's determination meets the substantial evidence test, the court does not solely consider the transcript of the public hearing and the public documents received by the Commission. The record before the Commission (and now before the court) comprises a number of confidential documents, the content of which may not now be divulged or discussed in this opinion. Nevertheless, the defendant has submitted an "accounting" of the evidence in the record supporting each of the factual findings of the Commission, and it suffices to state that I find the Commission's determination is clearly supported by substantial evidence.[5]

To buttress their contentions, plaintiffs have cited certain prior affirmative injury determinations by the Commission as "precedents." However, plaintiffs have failed to demonstrate that all the facts found by the Commission in the present case are identical with those found in the prior investigations cited. Defendant, on the other hand, has shown that this case is not factually identical with the prior investigations cited by plaintiffs. As stressed in *Armstrong I*, each injury investigation is *sui generis*, involving a unique combination and interaction of many economic variables; and consequently, a particular circumstance in a prior investigation cannot be regarded by the Commission as dispositive of the determination in a later investigation. Thus, as concluded in *Armstrong I*, injury investigations are properly decided by the Commission on a case-by-case basis.[6]

In summary, I find that the Commission applied the proper legal standards and considered appropriate economic and financial criteria in making its negative determination; and that its determination is supported by the administrative record. Accordingly, I must reject plaintiffs' claim that the Commission's determination is arbitrary, capricious, and not supported by substantial evidence.

II

Under the Antidumping Act of 1921, as amended, Treasury has the responsibility to determine whether a class or kind of foreign merchandise is being or is likely to be sold in the United States at LTFV. If

[5] This is not meant to imply that the Commission's determination must meet the "substantial evidence" test.

[6] Defendant concedes that this case-by-case approach does not carry with it a grant of carte blanche or authority to decide cases in an arbitrary or capricious manner.

Treasury determines that there are LTFV sales of a class or kind of foreign merchandise, Treasury must so advise the International Trade Commission, which then undertakes an investigation to determine whether a domestic industry is being injured or is likely to be injured, or is prevented from being established, by reason of such sales at LTFV. 19 U.S.C. 160(a).

We now consider whether Treasury's amended determination of sales at LTFV of October 21, 1975, was ultra vires because the antidumping investigation had already been transmitted to the Commission, and the Commission had already instituted its injury investigation.

Plaintiffs claim that after transmittal of the antidumping investigation to the Commission, Treasury had no further authority to act in the matter of determining the existence of sales at LTFV, and that the Commission acted unlawfully in narrowing the scope of its injury investigation to conform to Treasury's amended determination of sales at LTFV. Consequently, according to plaintiffs, the final injury determination was insufficient as a matter of law in that it failed to cover battery service tools other than battery terminal lifters.

As we have seen, the term "battery service tools," as used initially by Treasury and the Commission, included battery terminal lifters, battery post and terminal cleaning brushes, battery terminal spreaders, angle-nose pliers, booster cables, and battery service kits (terminal puller, cleaning brush, and two terminals). 40 F.R. 24218, 41155, and 42607. However, after the Commission had commenced its investigation, Treasury amended its affirmative LTFV determination to exclude all battery service tools except battery terminal lifters (40 F.R. 49111); and subsequently the Commission amended the scope of its injury investigation in conformity with Treasury's amended LTFV determination, by excluding the battery service tools, other than battery terminal lifters (40 F.R. 50320).

The reasons for Treasury's amendment of its LTFV determination are set forth in a memorandum dated November 10, 1975, from Peter O. Suchman to David R. Macdonald (attached to defendant's memorandum as exhibit 1). From the Suchman memorandum the following facts appear:[7]

The "battery service tools" encompassed within Treasury's original LTFV determination comprised six different types of tools: Battery terminal lifters, battery service kits (terminal puller, cleaning brush, and two terminals), battery post and terminal cleaning brushes, battery terminal spreaders, angle-nose pliers, and booster cables.

[7] This memorandum was furnished by defendant to plaintiffs pursuant to their discovery, with the last paragraph deleted on the ground of privilege. This claim of privilege was sustained by the court in an order entered on Mar. 27, 1979. *Armstrong Bros. Tool Co. et al.* v. *United States*, 82 Cust. Ct. 344, C.R.D. 79-8 (1979). Plaintiffs do not dispute the correctness of the factual matters set forth in the memorandum.

315-598 O - 80 - 4

Due to the insignificant volume of trade involved in "battery service tools" relative to the total volume of handtools covered by the investigation, battery service tools were treated as a single class or kind of merchandise. Since a substantial margin of dumping was found on terminal lifters, an affirmative determination of sales at LTFV was issued on "battery service tools." However, no dumping margins were found on battery service kits, brushes, terminal spreaders, or angle-nose pliers, and no information was received on booster cables.

It further appears from the Suchman memorandum that after the Commission received the investigation from Treasury, the Commission informed Treasury that the absence of any margin information on five of the six categories of battery service tools "posed serious problems," and that each of the tools within the battery service tools category should be considered individually since they are not competitive with one another. Treasury then decided that it was inappropriate to consider all the battery service tools together as a single class of merchandise, and treated each of the battery service tools separately. When considered individually, Treasury concluded that its original affirmative LTFV determination covering the battery service tools was improper inasmuch as five of the six tools (viz, all tools except the battery terminal lifters) "showed no margins."

Against this factual background, I am not persuaded that Treasury's action in amending its LTFV determination was ultra vires, as claimed by plaintiffs. I agree with defendant that Treasury's amendment is clearly authorized by section 153.42 (in 1975, sec. 153.39) of the Customs Regulations promulgated under the authority of 19 U.S.C. 173. Section 173 authorizes Treasury to make rules and regulations necessary for the enforcement of the Antidumping Act.

Section 153.42 of the Customs Regulations reads:

> 153.42 *Revocation of determination of sales at less than fair value; determination of sales at not less than fair value.* [Sec. 153.39 in 1975]
>
> If the Secretary is persuaded from information submitted or arguments received that his determination of sales at less than fair value was in error, and if the U.S. International Trade Commission has not yet issued a determination relating to injury, he will publish a notice of "Revocation of Determination of Sales at Less Than Fair Value," or if appropriate, a notice of "Modification of Determination of Sales at Less Than Fair Value," which notice will set forth a description of the merchandise involved and state the reasons upon which it was based. The Secretary will notify the U.S. International Trade Commission of his action. [19 CFR 153.42.]

Fundamentally, duly authorized customs regulations have the force and effect of law. *Socony Vacuum Oil Co., Inc.* v. *United States*, 44

CCPA 83, C.A.D. 641 (1957); *Gallagher & Ascher* v. *United States*, 14 Ct. Cust. Appls. 38, T.D. 41548 (1926); *Plywood & Door Southern Corp.* v. *United States*, 57 Cust. Ct. 309, C.D. 2800 (1966). Plainly, after becoming aware of the error in its original determination of sales at LTFV, Treasury had an obligation to observe its own regulation by making an appropriate modification of its original determination.

Plaintiffs' contention that Treasury's "second thoughts" on the matter of sales at LTFV respecting battery service tools were disruptive of the Commission's investigation (which was already in progress) is without merit. On that score, it need only be recalled that the impetus for the amendment came from the Commission's own staff which complained to Treasury that its original determination "posed serious problems" (Suchman memorandum).

Under all the facts and circumstances herein, I have concluded that Treasury's amendment of its determination of sales at LTFV was not ultra vires. In view of the foregoing conclusion, it follows that the Commission acted lawfully in limiting the scope of its injury investigation and determination to exclude battery service tools other than battery terminal lifters.

CONCLUSION

For the foregoing reasons: Plaintiffs' motion for summary judgment is denied; defendant's cross-motion for summary judgment is granted; and the action is dismissed.

It will bear repetition for the court to express publicly its sincere appreciation to Mr. Frederick L. Ikenson, attorney for the plaintiffs, and to Messrs. David M. Cohen, Joseph I. Liebman and Sidney N. Weiss, counsel for the Government, for their professional skill and assistance in aiding the court.

(C.D. 4849)

NATIONAL SUGAR REFINING COMPANY, PLAINTIFF *v.* UNITED STATES, DEFENDANT

On Plaintiff's Motion and Defendant's Cross-Motion for Summary Judgment

Court No. 77-10-04300

The date of exportation of merchandise imported from a foreign country to the United States is the time the merchandise actually leaves the country of exportation for the United States.

[Judgment for defendant.]

(Decided March 27, 1980)

Curtis, Mallet-Prevost, Colt & Mosle (*Robert* D. *Whoriskey* on the briefs) for the plaintiff.

Alice Daniel, Assistant Attorney General; *Joseph I. Liebman*, Attorney in Charge, Field Office for Customs Litigation (*Saul Davis* on the briefs), for the defendant.

BOE, Judge: The issue to which the court directs its attention herein has its genesis in the Presidential proclamations relating to the duties imposed on sugar imported into the United States under item 155.20, TSUS. On September 21, 1976, Presidential Proclamation 4463, modifying a prior proclamation, increased the duty on sugar imports. Subsequently on October 4, 1976, Presidential Proclamation 4466 was issued providing in part that the provisions of Presidential Proclamation 4463 "* * * shall not be effective with respect to articles exported to the United States before 12:01 a.m. (U.S. eastern daylight savings time), September 21, 1976, provided that such articles are entered, or withdrawn from warehouse, for consumption on or before November 8, 1976."

To the imposition of the increased duty provided by Presidential Proclamation 4463 on the sugar imported into the United States from the Dominican Republic and entered for consumption on October 22, 1976, the plaintiff filed a protest which was denied by the Customs Service. It is upon the motion for summary judgment filed by the plaintiff and the cross-motion for summary judgment filed by the defendant with respect thereto that this proceeding is now before the court.

The facts upon which plaintiff's motion is predicated are presented by an "affidavit" made by plaintiff's counsel alleging in material part: (1) That the sugar which plaintiff had contracted to purchase was fully laden on a charter vessel at the Port of Rio Haina, Dominican Republic, on September 20, 1976; (2) that local restrictions prohibited the charter vessel carrying the merchandise in question to sail from the port during night hours; (3) that the charter vessel bearing the merchandise in question departed the Port of Rio Haina and the country of the Dominican Republic, "clearing the harbor," at 7:30 a.m., local time, on September 21, 1976.

The defendant in its cross-motion contends that a genuine issue exists as to material facts alleged in plaintiff's motion, precluding judgment in favor of plaintiff's motion for summary judgment.[1]

Notwithstanding that the record clearly indicates that certain facts alleged by the plaintiff are in dispute, this court, however, is

[1] Defendant further contends that plaintiff's motion for summary judgment is supported only by an affidavit made by plaintiff's counsel asserting facts concerning which the affiant had no personal knowledge and which, accordingly, is inadmissible in evidence. Defendant has, therefore, treated plaintiff's affidavit as a statement of material facts provided by the rules of this court.

satisfied that no issue as to a material fact remains. Accordingly, a determination of the motion and cross-motion submitted by the respective parties is appropriate.

It is undisputed that the vessel carrying the merchandise in question finally departed the port at which the sugar cargo was laden and the country of the Dominican Republic subsequent to 12:01 a.m. on September 21, 1976 (e.s.t.). The sole question presented for determination, therefore, is whether the merchandise in question, as contended by the plaintiff, was "exported to the United States before 12:01 a.m. * * * September 21, 1976," within the intendment of Presidential Proclamation 4466. It is the opinion of the court that the answer must be in the negative.

"Exportation" has been defined by the U.S. Supreme Court as "(1) a severance of goods from the mass of things belonging to (the country of exportation) with (2) an intention of uniting them to the mass of things belonging to some foreign country." *Swan & Finch Co.* v. *United States*, 190 U.S. 143, 145 (1903). Both the element of severance as well as the element of intent must not only exist but coincide in order to constitute an act of exportation. *Moore Dry Goods Co.* v. *United States*, 11 Ct. Cust. App. 449, T.D. 39531 (1923); *United States* v. *National Sugar Refining Co.*, 39 CCPA 96, C.A.D. 470 (1951); *Nassau Distributing Co.* v. *United States*, 29 Cust. Ct. 151, C.D. 1459 (1952).

The "severance of goods from the mass of things belonging to (the country of exportation)" has been construed by our appellate court as meaning that the goods in question have been physically carried out of the country of exportation. See, e.g., *National Sugar Refining Co.*, 39 CCPA at 101.

In the construction of our Customs laws, the decisions of all courts have uniformly held that the date of exportation is that time at which the goods in question finally depart the country of exportation. *Roessler & Hasslacher Chemical Co.* v. *United States*, 1 Ct. Cust. App. 290, T.D. 31353 (1911); *Avakian Bros., Inc.* v. *United States*, 41 CCPA 80, C.A.D. 532 (1953); *D.N. & E. Walter & Co.* v. *United States*, 42 CCPA 114, C.A.D. 582 (1955); *F. A. Salamy & Co.* v. *United States*, 42 Cust. Ct. 204, C.D. 2086 (1959); *Westway Trading Corp.* v. *United States*, 83 Cust. Ct.—, C.D. 4826 (1979), *appeal pending*. As our appellate court has reasoned in *Avakian Bros., Inc.*, until the physical severance of the goods required in the act of exportation has been fully completed by their final departure from the country of exportation, the goods continue to remain within the jurisdiction of the exporting country, subject to search and seizure and such controls as might be exacted.

Of particular interest in connection with the instant proceeding is the case of *Sampson* v. *Peaslee*, 61 U.S. (20 How.) 571 (1858). The

physical acts referred to therein preparatory to the actual departure of the vessel carrying the exported merchandise are strikingly similar to the preparatory physical acts alleged by the plaintiff in the instant proceeding and upon which the plaintiff predicates its claim that the merchandise in issue was exported prior to the date provided by Presidential Proclamation 4466. In the *Peaslee* case the goods in question had been purchased by the buyer's agent, the merchandise fully loaded on the cargo vessel, the bills of lading issued, the vessel cleared at the customhouse and ready to sail on July 1. Because of insufficient wind, however, the ship could not sail until July 3. In construing the valuation statute of our Customs laws, the Supreme Court, however, held that the date of exportation of the goods in question therein was the date the ship actually sailed, July 3.

In a case recently decided by this court the identical Presidential proclamations were considered and interpreted with respect to the determination of a similar issue presented herein. *Westway Trading Corp.* v. *United States*, 83 Cust. Ct. —, C.D. 4826 (1979), *appeal pending*. In conformity with the precedential decisions afore-referred to, the date of exportation therein was determined to be the time at which the vessel carrying the merchandise in question finally departed the country of exportation.

Contrary to the assertion of the plaintiff, no indication has been evidenced by the courts that the determinations of the dates of exportation in *Avakian Bros., Inc.* and *D.N. & E. Walter & Co.* were peculiar to their being currency conversion and valuation cases respectively. As this court has stated in *Westway* with reference to these decisions, "(t)he reasoning of the courts therein, however, is equally applicable to and determinative of the date of exportation contained in Presidential Proclamation 4466 in the absence of accompanying language specifically indicating a construction otherwise." Slip op. at 10.

An examination of the decisions cited by the plaintiff reveals they are neither applicable to nor supportive of its contended construction of the term "exportation" in the instant proceeding. The plaintiff particularly relies on the meaning attributed to that term in the cases cited relating to the application of the provisions of article 1, sections 9 and 10 of the U.S. Constitution.[2] The date of exportation and the standard used by the courts in the determination thereof in connection with the application of the foregoing constitutional provisions upon merchandise intended for exportation reflect different purposes, and thus are not coextensive with, the date of exportation and the standard used by the court in the determination thereof for Customs purposes.

---

[2] Art. 1, sec. 9, clause 5 provides: "No tax or duty shall be laid on articles exported from any State."

Art. 1, sec. 10, clause 2 provides: "No State shall, without the consent of the Congress, lay any imposts or duties on imports or exports, except what may be absolutely necessary for executing its inspection laws: * * *".

See *Roessler & Hasslacher Chemical Co.*, 1 Ct. Cust. App. at 292–93.

In view of the undisputed facts herein, establishing that the vessel carrying the merchandise in question departed the country of exportation at 7:30 a.m., local time, on September 21, 1976, this court concludes that said merchandise was not "exported to the United States before 12:01 a.m. * * * September 21, 1976," within the intendment of Presidential Proclamation 4466 and is, therefore, subject to the additional duty imposed by Presidential Proclamation 4463. The motion of the plaintiff for summary judgment is hereby denied, and the cross-motion of the defendant for summary judgment is granted.

Let judgment be entered accordingly.

(C.D. 4850)

J. E. BERNARD & CO., INC., PLAINTIFF *v.* UNITED STATES, DEFENDANT

Aircraft Temperature Control Components

Court No. 75–2–00375

Components of temperature control systems which are used in the cabins of DC–9 aircraft were appraised on the basis of export value as defined in section 402(b) of the Tariff Act of 1930, as amended by the Customs Simplification Act of 1956, T.D. 54165, at the prices paid by the airlines. Held, the proper dutiable values are the prices paid by the original equipment manufacturer, Douglas Aircraft Co.

Parties have stipulated that if the airlines do not purchase "for industrial use" under the definition contained in section 402(f)(3) of the Tariff Act of 1930, as amended, supra, then the prices paid by the original equipment manufacturer are the proper dutiable values.

The phrase "for industrial use" requires utilization of the purchased article to result in a product. *American Greiner Electronic, Inc.* v. *United States*, 57 Cust. Ct. 616, R.D. 11221 (1966), *rev'd on rehearing*, 62 Cust. Ct. 905, R.D. 11658, 298 F. Supp. 313 (1969), *aff'd*, 66 Cust. Ct. 644, A.R.D. 289, 328 F. Supp. 498 (1971), *appeal dismissed*, 60 CCPA 185 (1972); *Ampex Professional Products Co.* v. *United States*, 68 Cust. Ct. 249, R.D. 11765 (1972), *aff'd*, 70 Cust. Ct. 312, A.R.D. 316 (1973).

A negotiated price on the basis of a competitive bid is not a price arrived at by "bargaining" which would eliminate its use in determining export value.

[Judgment for plaintiff.]

(Decided March 28, 1980)

Stein, Shostak, Shostak & O'Hara, Inc. (*S. Richard Shostak* and *John N. Politis* at the trial; *Theo B. Audett* with them on the brief) for the plaintiff.

Alice Daniel, Assistant Attorney General; *Joseph I. Liebman*, Attorney in Charge, Field Office for Customs Litigation (*John J. Mahon* at the trial and on the brief), for the defendant.

FORD, Judge: Plaintiff by this action is contesting the proper dutiable values of various parts of the temperature control systems [1] used in the cabins of DC–9 aircraft manufactured by Douglas Aircraft Co. The imported merchandise was manufactured in Canada by Garrett Manufacturing Ltd., the subcontractor for these parts, shipped to the United States and entered at the Port of Chicago, Ill., by J. E. Bernard & Co., Inc., a customhouse broker, for Douglas Aircraft Co.

The merchandise was appraised on the basis of export value, as defined in section 402(b) of the Tariff Act of 1930, as amended by the Customs Simplification Act of 1956, T.D. 54165, at the prices paid by the airlines. Plaintiff agrees the proper basis of appraisement is export value but contends the proper dutiable values are the prices paid by the original equipment manufacturer (OEM), Douglas.

The pertinent portions of section 402 of the Tariff Act of 1930, as amended, supra, provide as follows:

> (b) EXPORT VALUE.—For the purposes of this section, the export value of imported merchandise shall be the price, at the time of exportation to the United States of the merchandise undergoing appraisement, at which such or similar merchandise is freely sold or, in the absence of sales, offered for sale in the principal markets of the country of exportation, in the usual wholesale quantities and in the ordinary course of trade, for exportation to the United States, plus, when not included in such price, the cost of all containers and coverings of whatever nature and all other expenses incidental to placing the merchandise in condition, packed ready for shipment to the United States.
>
> * * * * * * *
>
> (f) DEFINITIONS.—For the purposes of this section—
>
> (1) The term "freely sold or, in the absence of sales, offered for sale" means sold or, in the absence of sales, offered—
>
> (A) to all purchasers at wholesale, or
>
> (B) in the ordinary course of trade to one or more selected purchasers at wholesale at a price which fairly reflects the market value of the merchandise,
>
> without restrictions as to the disposition or use of the merchandise by the purchaser, except restrictions as to such disposition or use which (i) are imposed or required by law, (ii) limit the price at which or the territory in which the merchandise may be resold, or (iii) do not substantially affect the value of the merchandise to usual purchasers at wholesale.
>
> (2) The term "ordinary course of trade" means the conditions and practices which, for a reasonable time prior to the exportation of the merchandise undergoing appraisement, have been normal in the trade under consideration with respect to merchandise of the same class or kind as the merchandise undergoing appraisement.

---

[1] The parts are identified on the invoices in the entry papers as: 47662-3-sensor; 47676-3-control; 47676-5-1-control temperature; 607146-2-1-control temperature; 607148-1-sensor; 607150-1-1-control temperature; 607152-1-1-temperature selector; 607300-1-1-temperature sensor; and 607702-1-1-temperature control.

(3) The term "purchasers at wholesale" means purchasers who buy in the usual wholesale quantities for industrial use or for resale otherwise than at retail; or, if there are no such purchasers, then all other purchasers for resale who buy in the usual wholesale quantities; or, if there are no purchasers in either of the foregoing categories, then all other purchasers who buy in the usual wholesale quantities.

* * * * * * *

(5) The term "usual wholesale quantities", in any case in which the merchandise in respect of which value is being determined is sold in the market under consideration at different prices for different quantities, means the quantities in which such merchandise is there sold at the price or prices for one quantity in an aggregate volume which is greater than the aggregate volume sold at the price or prices for any other quantity.

At the outset of the trial, counsel for the respective parties stipulated and subsequently amended the stipulation as follows:

(1) The merchandise at issue is not on the "Final List," T.D. 54521 and is subject to appraisement under the new law, section 402 of the Tariff Act of 1930, as amended by the Customs Simplification Act of 1956.

(2) This merchandise is subject to appraisement on the basis of export value as defined in section 402(b) of said new law, as amended.

(3) The consignee in this case, Douglas Aircraft Co., is an original equipment manufacturer.

(4) The appraisements at issue herein were at unit prices based on the sale to airline purchasers of parts of environmental control systems for DC–9 aircraft identical to the parts at issue herein.

(5) In the event that the airlines which purchased parts of environmental control systems for DC–9 aircraft identical to the parts at issue herein are determined not to be purchasers for industrial use within the meaning of section 402(f)(3), Tariff Act of 1930, as amended, the prices, at the time of exportation to the United States of the merchandise in issue, at which such or similar merchandise was freely sold or, in the absence of sales, offered for sale in the principal markets of the country of exportation, in the usual wholesale quantities and in the ordinary course of trade, for exportation to the United States, plus packing, when not included in such prices, and all other costs, charges and expenses incident to placing the merchandise in condition, packed ready for shipment to the United States, are the prices paid by the consignee, Douglas Aircraft Co., which is the original equipment manufacturer in this case.

The stipulation of the parties, particularly paragraph 5 thereof, presents a limited issue for determination by the court. The issue so presented is not whether the ultimate consignee and importer is a purchaser for industrial use as the term is utilized in section 402(f)(3), but whether airlines are purchasers for industrial use inasmuch as the appraisement was based upon the prices to airlines.

315-598 O - 80 - 5

Based upon the record as made it is not disputed that there are two classes of purchasers of the involved merchandise and two sets of prices. The OEM, Douglas, purchases the complete system, known as ship sets, while the airlines purchase a limited number of replacement parts and never a complete system. The sale price to Douglas is based upon a competitive bid price while those sold to airlines as replacement parts are subject to a pricelist promulgated by the manufacturer, Garrett. It is further established by the record that while Douglas orders complete systems, individual components are shipped as required and each component has a specific price based upon the competitive bid. The airlines, on the other hand, order only those parts it deems necessary for replacement and are billed on the basis of the pricelist for all purchasers other than Douglas.

While neither the record nor the briefs indicate the involved purchases by Douglas to be parts of the complete system and not replacement parts, the court assumes they are components of the complete system. This assumption is based upon the fact of record that Douglas does not supply replacement parts to the airlines who purchase such parts directly from the manufacturer, Garrett.

Whether they are part of the order for the complete system is immaterial since the appraisement was based upon the prices to airlines. There appears to be no question that Douglas is an OEM who utilizes the system in the fabrication of the DC–9 aircraft. It is also apparent that airlines are not OEM's and purchase only for replacement of nonfunctioning parts.

Defendant contends the price to Douglas is not a freely offered price since the price to OEM is a negotiated price and does not qualify for consideration in determining export value. Additionally, defendant contends, since both the OEM and the airlines are industrial users, the only price at which all could purchase is the price to the airlines.

Defendant's position with respect to a negotiated price as not being qualified for determination of export value is based on the fact that it is a price arrived at by bargaining which is not a proper price for value consideration. *F. B. Vandegrift & Co., Inc.* v. *United States*, 56 CCPA 105, C.A.D. 962, 410 F. 2d 1259 (1969); *United States* v. *Mexican Products Co.*, 28 CCPA 80, C.A.D. 129 (1940).

The negotiated price involved herein is on the basis of a competitive bid. Mr. Alec J. Luckevich, assistant to the vice president of Garrett Corp. called on behalf of plaintiff described the process as follows:

> A. Garrett Manufacturing would present a technical proposal to Douglas Aircraft Co. and Douglas Aircraft Co. would then evaluate the technical proposal against others received from competitive suppliers and then select on the basis of both technical proposals and then picks the supplier they desire. In this particular case it was Garrett Manufacturing, Ltd. which won the award.

A price arrived at in such a manner is not bargaining which would eliminate its use in determining export value.

However, before such price may be utilized it must be determined whether, within the statutory definitions prescribed by section 402(f) and particularly section 402(f)(3) in view of paragraph 5 of the stipulation, there are purchasers who fall within such category.

Section 402(f)(3) defines "purchasers at wholesale" as those "who buy in the usual wholesale quantities for industrial use or for resale otherwise than at retail * * *." The court is restricted to this level of purchasers at wholesale by virtue of paragraph 5 of the stipulation. The record is clear that Douglas falls within this level of purchasers at wholesale. Whether the airlines are purchasers for industrial use is not so readily determinable.

In *Ampex Professional Products Co.* v. *United States*, 68 Cust. Ct. 249, R.D. 11765 (1972), *aff'd*, 70 Cust. Ct. 312, A.R.D. 316 (1973), the trial court in considering the question of purchasers for industrial use made the following observations:

> Plaintiff attempts to disassociate these transactions from considerations on various grounds, the primary one being that CBS is not within the first category of "purchasers at wholesale" defined in section 402(f)(3), namely, purchasers who buy in the usual wholesale quantities for industrial use or for resale otherwise than at retail. The production of taped television programs which are subsequently broadcast over television stations is not, plaintiff urges, an industrial use.
>
> I do not agree. The business of producing network programs for broadcasting on a network affiliate is a known, recognized, albeit occasionally controversial, practice which constitutes a major economic factor in the billion dollar television industry. I am unable to perceive any significant difference, in assaying "industrial use" under the valuation statute, between the use of articles such as the steel strapping involved in *United States* v. *Acme Steel Company*, *supra* [51 CCPA 81, C.A.D. 841 (1964)], and the articles at bar.
>
> Furthermore, assiduous research into the legislative history of the Customs Simplification Act of 1956 fails to disclose any intent to give the term "industrial use" the narrow meaning ascribed to it by plaintiff. In the absence of such a showing, the appraising officer's presumptively correct finding that CBS purchased the cameras for "industrial use" has not been overcome.

Ampex is distinguishable on a number of grounds. As indicated, *supra*, the cameras in *Ampex* produced a product, to wit, network television programs, whereas the airlines in this case merely replaced nonfunctioning parts.

Research of counsel for the parties and the independent research of the court indicate one other case involving the question of purchasers for industrial use. In *American Greiner Electronic, Inc.* v. *United States*, 57 Cust. Ct. 616, R.D. 11221 (1966), *rev'd on rehearing*,

62 Cust. Ct. 905, R.D. 11658, 298 F. Supp. 313 (1969), *aff'd*, 66 Cust. Ct. 644, A.R.D. 289, 328 F. Supp. 498 (1971), *appeal dismissed*, 60 CCPA 185 (1972), the issue involved watch timers. The court in considering the question of industrial use found that a sale to a watchmaker who utilized the timer in the manufacture of watches was a sale to an industrial user. Again a product was produced by utilizing the timer even though the article, the timer, was not consumed. Accordingly, judicial interpretation of the phrase "for industrial use" requires utilization of the purchased article to result in a product.

Airlines do not produce a product by utilization of spare parts purchased for replacement of defective parts of the temperature control system. The products of the airlines, namely, transportation, meals, etc., are not the products of the temperature control system. The same reasoning is applicable even though airlines are considered an industry by the "Standard Industrial Classification Manual" which is designated as major group 45.

Since airlines are not purchasers for industrial use, the court finds, based upon paragraph 5 of the stipulation of the parties, that the prices paid by Douglas are the proper dutiable values.

Judgment will issue accordingly.

Decisions of the United States Customs Court

Customs Rules Decision

(C.R.D. 80–3)

SPRAGUE ELECTRIC COMPANY, PLAINTIFF *v.* UNITED STATES (CAPAR COMPONENTS CORP., PARTY-IN-INTEREST), DEFENDANT

On Plaintiff's Motion and Government's Cross-Motion for Summary Judgment

Court No. 77–9–03056

[Action stayed pending reconsideration by Commission of negative injury determination.]

(Dated March 27, 1980)

Frederick L. Ikenson, Esq., for the plaintiff.

Alice Daniel, Assistant Attorney General, *David M. Cohen*, Director, Commercial Litigation Branch, *Joseph I. Liebman*, Attorney in Charge, Field Office for Customs Litigation, and *Sidney N. Weiss*, trial attorney, Esqs., for the defendant.

NEWMAN, Judge:

INTRODUCTION

Plaintiff, an American manufacturer of tantalum electrolytic fixed capacitors, challenges the negative injury determination of the U.S. International Trade Commission (Commission) in investigation No. AA1921–159 (41 F.R. 47604 (1976)), under the Antidumping Act of 1921, as amended (19 U.S.C. 160, et seq. (1970)). That investigation involved tantalum electrolytic fired capacitors imported from Japan which the Department of the Treasury (Treasury) had determined were being or were likely to be sold in the United States at less than fair value (LTFV) within the meaning of the Antidumping Act, as amended. This suit has been brought under the provisions of 28 U.S.C. 1582(b) (1976), 28 U.S.C. 2632(a) (1976), and 19 U.S.C. 1516(c) (1976).

Capar Components Corp., the party in interest, is the consignee in New York Seaport consumption entry No. K 429821–77 of August 5,

1977, who imported tantalum electrolytic fixed capacitors from Japan without assessment of antidumping duties, and who has been made a party pursuant to 19 U.S.C. 1516(c) (1976). Under 19 U.S.C. 1516(f) (1976), the consignee or his agent has the right to appear and be heard as a party in interest in an action brought by an American manufacturer pursuant to section 1516. However, Capar Components Corp. has not participated in the defense of this case.

Presently before the court are plaintiff's motion and the Government's cross-motion for summary judgment. For the reasons that follow, proceedings in this action shall be stayed pending reconsideration by the Commission of its negative determination in investigation No. AA1921–159.

BACKGROUND

The pertinent facts concerning the administrative proceedings leading to the initiation of this action are undisputed, and may be summarized chronologically:

1. On September 24, 1975, plaintiff, through counsel, submitted a complaint to the Commissioner of Customs alleging that tantalum electrolytic fixed capacitors from Japan were being sold at LTFV within the meaning of the Antidumping Act of 1921, as amended.

2. On October 17, 1975, Treasury issued a notice that an investigation had been instituted to determine whether tantalum electrolytic fixed capacitors from Japan were being or were likely to be sold at LTFV (40 F.R. 48702).

3. On April 23, 1976, a withholding of appraisement notice covering tantalum electrolytic fixed capacitors from Japan issued by Treasury was published in the Federal Register (41 F.R. 16983).

4. On July 27, 1976, an affirmative determination of sales at LTFV covering tantalum electrolytic fixed capacitors from Japan (other than those produced and sold by Matsushita Electric Industrial Co., Ltd.) was issued by Treasury and published in the Federal Register (41 F.R. 31240).

5. On August 3, 1976, the Commission instituted investigation No. AA1921–159 to determine whether an industry in the United States was being or was likely to be injured, or prevented from being established, by reason of the importation of tantalum electrolytic fixed capacitors from Japan at LTFV. Notice of the institution of the investigation and of the public hearing was published in the Federal Register on August 9, 1976 (41 F.R. 33337).

6. On October 22, 1976, the Commission, by a vote of 5 to 1, reached a negative determination, viz, the Commission majority determined that an industry in the United States was not being and was not likely to be injured, or prevented from being established, by reason of the imports at LTFV. The decision, together with a statement of reasons, was published in the Federal Register on October 29, 1976 (41 F.R.

47604). The Commission stated that in arriving at its determination, it "gave due consideration to written submissions from interested parties, evidence adduced at the hearing, and all factual information obtained by the Commission's staff from questionnaires, personal interviews and other sources" (ibid.).

7. During the Commission's investigation, counsel for plaintiff informed the Commission at the hearing held on September 8, 1976, of the likelihood that the import statistics for tantalum electrolytic fixed capacitors from Japan were inaccurate and underrepresented the true volume of such imports. Document No. 52 at 30–31, hearing transcript (Public).

8. On June 13, 1977, after the Commission announced its negative determination in this case, the Commission was informed by its Director of Industries that the investigation was "yet another example of substantially erroneous official import statistics being used by the Commission and its staff during the course of public investigations." The Foreign Trade Division of the Bureau of the Census conducted an investigation of the accuracy of import statistics for tantalum electrolytic fixed capacitors from Japan by calendar quarters for 1975 through mid-1977. The investigation showed that for 1975 the actual volume of such imports was 21,814,079 units, whereas the erroneously reported volume of such imports during 1975, upon which the Commission relied, was 14,948,243 units. This translates into an increase in market penetration from 4.6 percent to 6.6 percent. Further, the investigation showed that for the first half of 1976 the actual volume of such imports was 19,328,083 units, whereas the erroneously reported volume of such imports during this period upon which the Commission relied was 13,769,411 units.

9. On July 21, 1978, the Commission's General Counsel raised with the Commission the possibility of reconsidering its determination in light of the erroneous import statistics relied upon by the Commission and its staff.

10. On August 22, 1978, the Commission published in the Federal Register notice of the erroneous import statistics and invited the public to comment upon "whether the Commission's reliance on erroneous official statistics justifies further Commission action with respect to its determination in investigation No. AA1921–159" (43 F.R. 37233).

11. On February 9, 1979, the Commission published notice in the Federal Register that no further action would be taken with respect to its negative determination in investigation No. AA1921–159 (44 F.R. 8359). No reason was given by the Commission for not taking further action.

No question is presented concerning plaintiff's compliance with the administrative prerequisites to the initiation of a civil action prescribed by 19 U.S.C. 1516 (a) and (c).

During the discovery phase of this litigation, plaintiff sought, inter alia, production of "All documents and things in the files of the International Trade Commission and/or individual Commissioners, pertaining to the Commission investigation No. AA1921-159 * * *." Defendant moved for a protective order prohibiting plaintiff from conducting discovery into matters beyond the Commission's notice of investigation and hearing (41 F.R. 33337-38 (1976)) and the Commission's negative injury determination and statement of reasons (41 F.R. 47604-07 (1976)). Defendant's motion was decided by this court on June 27, 1978, culminating in an order which, in pertinent part, reads (80 Cust. Ct. 256, 257, C.R.D. 78-7 (1978)):

> 2. That the Secretary of the U.S. International Trade Commission, Kenneth R. Mason, shall prepare and transmit to Joseph E. Lombardi, clerk of the U.S. Customs Court, on or before July 28, 1978, the following: (1) A certified copy of the transcript of proceedings and exhibits introduced before the Commission in investigation AA1921-159; (2) certified copies of all written submissions, questionnaires, reports and all other documents relating to investigation AA1921-159; and (3) all other things in the files of the Commission relating to the investigation. *Cf.* Judge Maletz' order in *Pasco Terminals, Inc.* v. *United States*, 80 Cust. Ct. 249, C.R.D. 78-3 (1978), and also his unpublished order in the same case entered on May 8, 1978. See also my order in *Armstrong Bros. Tool Co. et al.* v. *United States (Daido Corporation, Steelcraft Tools Division, Party-in-Interest)*, 80 Cust. Ct. 252, C.R.D. 78-5 (1978), entered concurrently herewith.
>
> 3. That denial of defendant's present motion for a protective order shall be without prejudice to renewal respecting any documents or things that were received by the Commission on a confidential basis or are otherwise privileged.
>
> 4. That the basis of this order is to enable the court to determine whether or not the Commission's finding of injury was, among other things, arbitrary, an abuse of discretion, or otherwise contrary to law. See, e.g., *Camp* v. *Pitts*, 411 U.S. 138 (1973); *Citizens to Preserve Overton Park* v. *Volpe*, 401 U.S. 402 (1971); *Imbert Imports, Inc.* v. *United States*, 60 CCPA 123, C.A.D. 1094, 475 F. 2d 1189 (1973); *Suwannee Steamship Company* v. *United States*, 79 Cust. Ct. 19, C.D. 4708, 435 F. Supp. 389 (1977); *cf. Dunlop* v. *Bachowski*, 421 U.S. 560 (1975). See also questions and answers attached to the letter of Daniel Minchew, Chairman, U.S. International Trade Commission, November 16, 1977, reproduced in *Hearing before the Subcommittee on Trade, House Committee on Ways and Means, on the Adequacy and the Administration of the Antidumping Act of 1921* (95th Cong., 1st sess. 1977), pages 65-66.

Pursuant to the foregoing order, as modified, the Secretary of the Commission transmitted what are represented to be all of the documents and things enumerated and described above that were locatable,

with the exception of seven documents that were claimed by the Commission Chairman to be privileged.[1]

PARTIES' CONTENTIONS

Plaintiff contends that the Commission reached a negative injury determination by misinterpreting and misapplying the law. Specifically, plaintiff urges that the Commission "impermissibly fragmented the relevant product group of LTFV imports and considered the impact of such subgroups rather than the impact of the total group" (memorandum at 15). Further, plaintiff maintains that even if the Commission did not misapply the law, "the findings of fact upon which the Commission based its negative determination are arbitrary and capricious, and not supported by substantial evidence" (ibid). Finally, plaintiff seeks to overturn the Commission's determination on the basis that "it has been admitted by the Commission that the import statistics it relied upon were false and underrepresented the true magnitude of LTFV imports" (ibid). Hence, plaintiff seeks an order setting aside the Commission's determination and directing Treasury to publish a finding of dumping, with the result that dumping duties will be assessed, where appropriate, on entries of the subject capacitors from Japan.

Defendant advances the argument that the court is limited to a review of the Commission's statement of reasons in deciding whether the Commission's determination is arbitrary, capricious, or otherwise contrary to law. Relying upon the foregoing scope and standard of review, defendant urges that in its statement of reasons, the Commission (majority) applied proper legal criteria and considered appropriate indicia of injury, and therefore its determination is not arbitrary, capricious, or otherwise contrary to law. Moreover, defendant contends that the Commission's determination is supported by the administrative record. Finally, defendant posits that the Commission properly limited its investigation to the impact on the domestic industry of the LTFV imports; and that the erroneous import statistics relied on by the Commission had no material bearing on the Commission's negative determination.

---

[1] The order of June 27, 1978, was modified by a protective order entered on Aug. 1, 1978, and was further modified in an order entered on Dec. 27, 1978, wherein a claim of privilege was sustained respecting 7 documents. 81 Cust. Ct. 168, C.R.D. 78-18, 462 F. Supp. 966 (1978). In an order entered on Jan. 25, 1979, a claim of privilege was denied as to a portion of 1 other document, which was made available to plaintiff's counsel in its entirety. 82 Cust. Ct. 304, C.R.D. 79-4 (1979).

The documents and things comprising the administrative record are listed on 2 numbered indexes, which were also transmitted to the court, entitled "List No. 1, Public Documents Transmitted to the U.S. Customs Court," and "List No. 2, Confidential Documents Transmitted to the U.S. Customs Court." Public documents are identified on list No. 1, while those documents which the Commission treated as containing confidential business information and which are subject to the terms of the protective order entered on Aug. 1, 1978, are identified on list No. 2.

OPINION

I

The scope and standard of review pertaining to the Commission's injury determinations under the Antidumping Act were addressed in my recent opinions in *Armstrong Bros. Tool Co. et al.* v. *United States* (*Daido Corporation, Steelcraft Tools Division, Party-in-Interest*), 84 Cust. Ct. —, C.D. 4838 (1980), *appeal pending*, and *Armstrong Bros. Tool Co. et al.* v. *United States* (*Great Neck Saw Manufacturing, Incorporated, Party-in-Interest*), 84 Cust. Ct. —, C.D. 4848 (1980). That discussion is fully applicable in the present case. To briefly reiterate, the Court of Customs and Patent Appeals has stressed that "(t)he courts have a very limited power of review over the Commission's (injury) determinations"; and, "(i)t is not the judicial function to review or to weigh the evidence before the Commission or to question the correctness of findings drawn therefrom." *City Lumber Co. et al.* v. *United States*, 59 CCPA 89, 92, C.A.D. 1045, 457 F. 2d 991 (1972). See also *Imbert Imports, Inc., et al.* v. *United States*, 60 CCPA 123, C.A.D. 1094, 475 F. 2d 1189 (1973); *Kleberg & Co. (Inc.)* v. *United States*, 21 CCPA 110, T.D. 46446 (1933). The foregoing decisions and other cases cited and discussed in the first *Armstrong* opinion teach that this court may not substitute its judgment in factual matters for that of the Commission, and the relative weight to be given to the various criteria of injury considered by the Commission is a matter for that agency's discretion and expert judgment.

Additionally, in the first *Armstrong* case, I emphasized the complex nature of an injury determination under the Antidumping Act, and the intent of Congress to provide the Commission with a wide latitude within which to make its determination on a case-by-case basis. But there is no dispute that the Commission's determination may be set aside if arbitrary, capricious or otherwise contrary to law, as held in the *Armstrong* cases.

II

Here, the statement of reasons by the Commission (majority) discussed five criteria of injury (market penetration of LTFV sales, U.S. shipments, lost sales, profits, and prices) and found that any injury which the domestic industry may have experienced, or may be likely to experience, "is not by reason of LTFV imports" (41 F.R. 47605). Accordingly, the Commission determined that since the condition of causation imposed by the statute was not satisfied, a negative determination was required.

The Commission, in its discussion of market penetration of LTFV sales, stated (41 F.R. 47605):

> (I)n determining the impact of LTFV sales of tantalum capacitors from Japan on the relevant U.S. industry, we have excluded from consideration imports of tantalum capacitors of Matsushita Electric Industrial Co., Ltd., as Treasury has done from its LTFV determination, and have considered the impact of 35 percent of the remaining tantalum capacitor imports from Japan, since this is the percentage which Treasury actually found to be sold at LTFV after looking at about 75 percent of such imports during the period of investigation. References to import statistics and import penetration in this statement reflect this finding.

The Commission then observed that the penetration of LTFV imports of tantalum capacitors from Japan declined from about 2 percent for 1974 to less than 1.5 percent for 1975.

Continuing, the Commission noted the decline in U.S. producers' shipments of tantalum capacitors and found:

> This 32-percent decline in U.S. producers' shipments in that year (1975) was attributable to the recession and not to LTFV imports, which not only declined by 50 percent in absolute quantity but also experienced a market decline in their already minimal market share in 1975, as noted above.

Lost sales by the domestic industry were not attributable to the LTFV imports according to the Commission:

> *Lost sales.*—A thorough examination of transactions in the original equipment manufacturers (OEM) market in the United States in 1975, covering 67 percent of the value of Japanese imports in that year, reveals that a Japanese-made tantalum capacitor was priced below an American-made capacitor in 25 percent of the instances in which they met in the OEM market. In two-thirds of those instances, however, the Japanese-made capacitor was not purchased.
>
> Although one Japanese supplier of LTFV imports consistently undersold U.S. producers with respect to one type of capacitor sold to one particular OEM account, the quantity of its U.S. sales of this capacitor was so small that it could not be an identifiable cause of adverse impact on the domestic industry.

Although profits of the domestic industry on their tantalum capacitor operations declined significantly from 1973 to 1975, the Commission majority found that the LTFV imports could not be blamed for the decline. The Commission observed that 1975 was "a year in which imports of these articles from Japan declined sharply, and where market penetration was very low." Furthermore, the Commission noted that "despite the significant decline in profits in recession year 1975, U.S. tantalum capacitor operations were twice as profitable as the operations of all manufacturers of electrical and electronic equipment in that year." The Commission expected the profits of the

U.S. producers to return to the higher levels that prevailed in 1973 and 1974, with continued improvement in demand for capacitors in 1976.

With respect to prices, the Commission found:

> *Prices.*—The quantities of sales per order of the Japanese-made tantalum capacitors have been small compared with the quantities of sales of U.S. producers of tantalum capacitors. In general, Japanese sales did not exceed 100,000 to 200,000 units per month, whereas orders placed with U.S. producers were frequently for 1 million or more units per month. While price plays a significant role in what company receives the order, the effect of the small-sized orders for the Japanese tantalum capacitors is insignificant on prices of the total U.S. industry. The small decline in U.S. producers' prices for some types of tantalum capacitors in late 1975 and early 1976 from a peak in 1974 stemmed from the decreased demand occurring after a substantial buildup in inventories by OEM purchasers in 1974 and 1975 and not from LTFV imports.

Finally, the Commission majority found there was no likelihood of injury as a result of the LTFV imports, notwithstanding a planned expansion of Japanese capacity to produce tantalum capacitors in 1976 and 1977, and an anticipated increase in 1977 exports by one Japanese producer. The Commission noted that during the first half of 1976, domestic shipments increased 38 percent, and continued growth in U.S. demand was anticipated. Continuing, the Commission observed:

> The projected sharp growth in demand for tantalum capacitors is not confined to the United States but is expected to occur also in Japan and other major markets. Thus, only a limited share of the increased production in Japan will be available for export to the United States. Under these conditions, even though the Japanese increase their exports to the United States, it is doubtful that they will increase their share of the expanding U.S. market for tantalum capacitors to the extent that such imports from Japan would be an identifiable cause of any injury which the relevant domestic industry may suffer in the future.

In dissent, Commissioner Parker submitted a separate statement of reasons for an affirmative determination of likelihood of injury. In support of his affirmative determination, Commissioner Parker noted the increased Japanese capacity to produce tantalum capacitors, the planned increases in Japanese exports, and the expected intensification of competition between the domestic producers and the Japanese exporters.

III

In its statement of reasons, the Commission (majority) considered reasonable criteria in determining whether injury or the likelihood thereof existed. It is readily apparent from the majority's factual

findings that the domestic tantalum capacitor industry was experiencing several adverse economic developments. Nevertheless, the administrative record before the Commission at the time of its determination shows a rational basis for the Commission's conclusion: "Any injury which the domestic industry may be experiencing or may be likely to experience is not by reason of LTFV imports." However, the deeply disturbing fact remains that the Commission in making its determination relied upon substantially erroneous import statistics provided by the Bureau of Census which grossly understated the true volume of tantalum capacitor imports,[2] and that the Commission's notice of February 9, 1979 (44 F.R. 8359), states, without giving any reason, that no further action would be taken respecting its original negative determination. Inasmuch as the official statistics before the Commission at the time of its determination grossly understated the tantalum electrolytic fixed capacitor imports, and the LTFV imports comprised a certain percentage of the former (viz, 35 percent), it logically follows that the LTFV imports and the domestic consumption thereof were substantially greater than the figures assumed by the Commission.

Under the Antidumping Act the Commission is charged by Congress with the responsibility for making an investigation, evaluating pertinent economic data bearing upon the question of injury or the likelihood thereof, and making a determination, either affirmative or negative. Whether the true volume of LTFV imports disclosed by the corrected statistics would warrant a finding by the Commission that there was injury "by reason of" sales at LTFV, and thus compel an affirmative determination, is a matter for the Commission's consideration and expert judgment. If, in light of the correct import statistics, the Commission can still demonstrate a rational basis for a negative determination, this court will be obliged to sustain such determination.

I agree with defendant's contention that if the Commission's original determination cannot be sustained by the court because of the incorrect import statistics, an appropriate remedy would be to stay the proceedings in this court pending a new determination by the Commission in light of the correct statistical information. See *United States* v. *Bianchi & Co.*, 373 U.S. 709, 718 (1963). See also *Camp* v. *Pitts*, 411 U.S. 138, 143 (1973). *Cf. SCM Corporation* v. *United States* (*Brother International Corporation, Party-in-Interest*), 84 Cust. Ct. —, C.R.D. 80-2 (1980); *Voss International Corp.* v. *United States*, 78 Cust. Ct. 130, C.D. 4698, 432 F. Supp. 205 (1977) (case remanded to Commission at previous stage in the proceeding).

[2] Certified copy of memorandum dated June 13, 1977, annexed to plaintiff's brief as part of collective exhibit 2.

Inasmuch as the Commission was informed of its use of erroneous import statistics but nonetheless declined to take further action, without explanation, defendant's reliance upon the well established rule that an administrative decision may not be judicially overturned on the basis of a new record made initially in the reviewing court [3] is patently misplaced.

IV

As we have seen, the Commission majority noted in its statement of reasons that:

> (I)n determining the impact of LTFV sales of tantalum capacitors from Japan on the relevant U.S. industry, we have excluded from consideration imports of tantalum capacitors of Matsushita Electric Industrial Co., Ltd., as Treasury has done from its LTFV determination, and have considered the impact of 35 percent of the remaining tantalum capacitor imports from Japan, since this is the percentage which Treasury actually found to be sold at LTFV after looking at about 75 percent of such imports during the period of investigation. References to import statistics and import penetration in this statement reflect this finding.

We now turn to plaintiff's argument that the majority of the Commission "impermissibly fragmented the relevant product group." On this score, plaintiff contends that the Commission was required by the Antidumping Act to consider the impact on the domestic industry of the entire class or kind of merchandise involved, whether or not sold at LTFV (other than the capacitors produced and sold by Matsushita). Defendant, however, insists that the Commission acted properly in considering the impact on the domestic industry of only the LTFV imports. I agree with defendant's construction of the statute.

The Antidumping Act requires the Treasury to advise the Commission whenever it "determines that a class or kind of foreign merchandise is being, or is likely to be, sold in the United States * * * at less than its fair value * * *." The Commission is thereupon directed to "determine * * * whether an industry in the United States is being or is likely to be injured * * * by reason of the importation of such merchandise into the United States." 19 U.S.C. 160(a).

The statute, essentially, is intended to protect the domestic industry from international price discrimination, and requires a finding by the Commission that injury, or the likelihood thereof, is "by reason of" imports at LTFV. As recently stated by Chief Judge Re

[3] See *FPC* v. *Transcontinental Gas Pipe Line Corp.*, 423 U.S. 326, 331 (1975), and cases cited.

in his well-reasoned decision in *SCM Corporation* v. *United States* (*Brother International Corporation, Party-in-Interest*), *supra:*

> If the Secretary issues an affirmative finding of sales at less than fair value, the matter is referred to the International Trade Commission. The Commission must then determine whether an industry in the United States is being or is likely to be injured, or is prevented from being established, *by reason of the less than fair value sales.* * * * [Italic added.]

Thus, the act is not designed to ameliorate all of the effects of import competition, and the Commission is required to focus its investigation on the impact of LTFV imports. Plaintiff's reading of the statute would require the Commission to investigate the impact of the entire class or kind of merchandise involved in Treasury's LTFV investigation, notwithstanding that Treasury may have found LTFV margins on only a percentage of the imports investigated.[4] Plainly, this interpretation was not intended by Congress. In this connection, it may be noted that Congress has provided different forms of relief, other than the Antidumping Act, for imports sold at fair value. See e.g., sections 201 and 406 of the Trade Act of 1974.

While the statute provides that Treasury must determine whether a "class or kind of foreign merchandise" is being or is likely to be sold at LTFV, I am clear that it is the LTFV imports that must be the subject of the Commission's injury investigation.[5] Accordingly, I conclude that the Commission majority did not err in considering the impact of only the percentage of imports of tantalum electrolytic capacitors from Japan which Treasury actually found to be sold at LTFV.

Footnote 3 of the majority's statement of reasons states (41 F.R. 47605):

> During the investigation the Commission learned that Nippon Electric Co. (NEC) intended to increase its exports of tantalum capacitors to the United States significantly during 1977. However, the increase in such exports to the United States (estimated to be several millions of units) will consist almost entirely of epoxy dipped fixed capacitors. Information furnished to the Commission by the Department of the Treasury contained in a letter dated July 7, 1976, from the U.S. Customs Service to Assistant Secretary David R. Macdonald, states "NEC sold hermetically sealed and epoxy dipped capacitors and margins were found only on the hermetically sealed capacitors." *Therefore, since no LTFV margins were found in NEC sales of epoxy dipped capacitors, Commissioners*

---

[4] Hence, plaintiff's position, if carried to its logical conclusion, would require the Commission to investigate the impact on the domestic industry of 100 percent of the class or kind of merchandise involved in Treasury LTFV investigation even though only 1 percent of the involved merchandise was found by Treasury to be sold at LTFV.

[5] Although the statute makes injury by reason of LTFV imports the focus of the Commission's antidumping investigation, the Commission clearly has discretionary authority to investigate whether imports of the same class or kind sold at fair value are potentiating the capacity of the LTFV imports to cause injury.

> *Moore and Bedell believe that NEC's anticipated increase in exports of such capacitors to the United States should not be used as a basis for a finding of likelihood of injury.* [Italic added.]

For the same reason I concluded that the Commission majority did not err in investigating the impact on the domestic industry of only the LTFV imports, I agree with the approach of Commissioner Moore and Commissioner (now Chairman) Bedell in their finding of no likelihood of injury. Since Treasury found no LTFV margins on Nippon's sales of epoxy dipped capacitors,[6] the anticipated increase in exports of such capacitors to the United States should not be used as a basis for a finding of likelihood of injury. Stated differently, since no margins were found by Treasury on Nippon's sales of epoxy dipped capacitors, there could be no basis under the statute for finding that any likelihood of injury was "by reason of the importation of such merchandise (LTFV imports) into the United States."

CONCLUSION

For the reasons stated herein, it is hereby ordered that:

1. Plaintiff's motion and defendant's cross-motion for summary judgment are denied at this time;

2. Proceedings in the instant case shall be stayed pending a reconsideration by the Commission of its original determination in investigation No. AA1921–159 and the taking of a new vote on the question of whether, in light of the correct import statistics for tantalum electrolytic fixed capacitors from Japan, sales of such merchandise at LTFV were injuring or were likely to injure an industry in the United States within the meaning of the Antidumping Act of 1921, as amended; and the Commission may conduct any further proceedings which it deems appropriate, but consistent with this order;

3. The Commission shall, through counsel for defendant, submit to the court within 90 days from the date of entry of this order its new determination, whether affirmative or negative, together with a complete statement of findings and conclusions, and the reasons or bases therefor, on all material issues of fact or law presented, including the materiality of the corrected import statistics on the Commission's new determination.

---

[6] Notwithstanding that Treasury found no margins on the sale of Nippon's epoxy dipped capacitors, Treasury declined to grant Nippon's request to have the LTFV determination severed between different types of tantalum capacitors and, in effect, to eliminate from Treasury's LTFV determination tantalum electrolytic fixed capacitors identified or described as "dipped."

Decisions of the United States Customs Court

Abstracts

Abstracted Protest Decisions

DEPARTMENT OF THE TREASURY, *March 31, 1978.*

The following abstracts of decisions of the United States Customs Court at New York are published for the information and guidance of officers of the customs and others concerned. Although the decisions are not of sufficient general interest to print in full, the summary herein given will be of assistance to customs officials in easily locating cases and tracing important facts.

ROBERT E. CHASEN,
Commissioner of Customs.

DECISION NUMBER	JUDGE & DATE OF DECISION	PLAINTIFF	COURT NO.	ASSESSED	HELD	BASIS	PORT OF ENTRY AND MERCHANDISE
				Par. or Item No. and Rate	Par. or Item No. and Rate		
P80/41	Richardson, J. March 25, 1980	Shigma, Incorporated	78-7-01291	Item 720.90 27.5%	Item 685.90 8.5%	Agreed statement of facts	San Francisco Silicon interconnectors; electrical apparatus
R80/42	Richardson, J. March 25, 1980	Swift Instruments, Inc.	72-6-01268, etc.	Item 708.80 30% or 27%	Item 204.50 2¢ per lb. + 5%; or 2¢ per lb. + 4.5%	Swift Instruments, Inc. v. U.S. (C.D. 4804)	San Francisco Wooden boxes

DECISION NUMBER	JUDGE & DATE OF DECISION	PLAINTIFF	COURT NO.	ASSESSED	HELD	BASIS	PORT OF ENTRY AND MERCHANDISE
				Par. or Item No. and Rate	Par. or Item No. and Rate		
P80/43	Boe, J. March 25, 1980	Enerco, Inc.	76-3-00594, etc.	Item 475.05 0.125¢ per gal. Item 475.10 0.25¢ per gal.	Not subject to duty under TSUS because it was never imported unto U.S.	Hawaiian Independent Refinery v. U.S. (C.D. 4777)	Honolulu Light and heavy gas oil, testing both over and under 25° A.P.I. gravity, manufactured in Foreign Trade Subzone 9A, Honolulu, from crude oil having the status of non-privileged foreign merchandise
P80/44	Richardson, J. March 26, 1980	Eurasian Automative Products	77-8-01377	Item 705.50 25%	Item 735.05 7.5%	Agreed statement of facts	San Francisco Gloves used in sport of motorcross
P80/45	Maletz, J. March 26, 1980	Nadel Trading Corp.	77-10-04199, etc.	Item 737.95 17.5%	Item 734.20 Free of duty pursuant to GSP by virtue of Ex. Order No. 11888 of 11/24/75	Mego Corp. v. U.S. (C.A.D. 1137)	New York Pin ball games; product of eligible beneficiary country
P80/46	Newman, J. March 28, 1980	S.G.B. Epic Co.	71-6-00310	Item 657.20 15% or 13%	Item 652.98 11% or 9.5%	S.G.B. Steel Scaffolding & Shoring Co., Inc. v. U.S. (C.D. 4802)	New York Shore frame systems and parts

Decisions of the United States Customs Court

Abstracts

Abstracted Reappraisement Decisions

DECISION NUMBER	JUDGE & DATE OF DECISION	PLAINTIFF	COURT NO.	BASIS OF VALUATION	HELD VALUE	BASIS	PORT OF ENTRY AND MERCHANDISE
R80/71	Re, C.J. March 25, 1980	Adorence Co. Inc.	74-4-01061	Export value	Appraised values shown on entry papers less those additions included in appraised values to reflect currency revaluation	C.B.S. Imports Corp. v. U.S. (C.D. 4739)	New York Various articles
R80/72	Rao, J. March 25, 1980	Standard Glass Co., an Arizona corporation	76-2-00434	Foreign value	$2,035, net packed	Agreed statement of facts	Los Angeles Laminated sheet glass
R80/73	Rao, J. March 25, 1980	YKK Zipper Co. Inc. Yoshida International, Inc., et al.	75-10-02605, etc.	Constructed value	Equal to invoiced unit prices plus 8.5%, net packed	Agreed statement of facts	New York Zippers and/or zipper parts classified under item 745.70, 745.72 or 745.74

DECISION NUMBER	JUDGE & DATE OF DECISION	PLAINTIFF	COURT NO.	BASIS OF VALUATION	UNIT OF VALUE	BASIS	PORT OF ENTRY AND MERCHANDISE
R80/74	Richardson, J. March 25, 1980	Merit International Corp.	75-2-00335	Constructed value	Invoice units of value, plus amounts for ocean freight from Japan to Canada, and freight charges to U.S., packed, as set forth in invoices, or in those instances where ocean freight and shipping charges are not set forth, at invoice units of value, plus 10%, packed	Agreed statement of facts	Boston Headphones, stereo tape player, etc.
R80/75	Richardson, J. March 25, 1980	Merit International Corp.	75-5-01216	Constructed value	Invoice unit value, plus amounts for ocean freight from Japan to Canada, and freight charges to U.S., packed, as set forth in invoices, or in those instances where ocean freight and shipping charges are not set forth, at invoice units of value, plus 10%, packed	Agreed statement of facts	Boston Tape players
R80/76	Richardson, J. March 25, 1980	Merit International Corp.	75-7-01811	Constructed value	Invoice units of value, plus amounts for ocean freight from Japan to Canada, and freight charges to U.S., packed, as set	Agreed statement of facts	Boston Auto tape player, home stereo, and speakers

					forth in invoices, or in those instances where ocean freight and shipping charges are not set forth, at invoice units of value, plus 10%, packed		
R80/77	Richardson, J. March 25, 1980	Merit International Corp.	75-12-03255	Constructed value	Invoice units of value, plus 10% packed	Agreed statement of facts	Boston Tape players
R80/78	Newman, J. March 25, 1980	Yoshida International, Inc. YKK Zipper Inc.	74-6-01552	Constructed value (if exported from Japan prior to 2/1/72) United States value (if exported on or after 2/1/72)	Equal to invoiced unit prices plus 8.5%, net packed Equal to invoiced unit prices, net packed	Agreed statement of facts	Los Angeles; New York Zippers and/or zipper parts classified under item 745.70, 745.72 or 745.74
R80/79	Boe, J. March 25, 1980	Federal Pacific Electric Co.	74-12-03476	Export value	Equal to invoice unit prices, net packed	Agreed statement of facts	Buffalo Switches, switchboard parts and relays
R80/80	Re, C. J. March 26, 1980	Allis-Chalmers Power Systems, Inc.	75-8-01916, etc.	Export value	Invoice unit prices, net packed	C.B.S. Imports Corp. (C.D. 4739)	Milwaukee Parts of turbine generators
R80/81	Rao, J. March 26, 1980	Consolidated Sewing Machine Corp.	R60/4724, etc.	Export value	F.o.b. unit invoice prices plus 20% of difference between f.o.b. unit invoice prices and appraised values	Agreed statement of facts	Los Angeles Sewing machine heads
R80/82	Rao, J. March 26, 1980	Trans World Industries	R66/16518, etc.	Export value	F.o.b. unit invoice prices plus 20% of difference between f.o.b. unit invoice prices and appraised values	Agreed statement of facts	New York Sewing machine heads

DECISION NUMBER	JUDGE & DATE OF DECISION	PLAINTIFF	COURT NO.	BASIS OF VALUATION	UNIT OF VALUE	BASIS	PORT OF ENTRY AND MERCHANDISE
R80/83	Rao, J. March 26, 1980	Trans World Industries	R67/13437, etc.	Export value	F.o.b. unit invoice prices plus 20% of difference between f.o.b. unit invoice prices and appraised values	Agreed statement of facts	New York Sewing machine heads
R80/84	Rao, J. March 26, 1980	Trans World Industries, Inc.	R68/5900, etc.	Export value	F.o.b. unit invoice prices plus 20% of difference between f.o.b. unit invoice prices and appraised values	Agreed statement of facts	New York Sewing machine heads
R80/85	Richardson, J. March 26, 1980	Consolidated Sewing Machine Corp.	R65/16603, etc.	Export value	Appraised unit values less 7.5%, net packed	Agreed statement of facts	Los Angeles Sewing machines
R80/86	Richardson, J. March 26, 1980	J. C. Penney	R61/503, etc.	Export value	F.o.b. unit invoice prices plus 20% of difference between f.o.b. unit invoice prices and appraised values	Agreed statement of facts	Norfolk Tubing mats
R80/87	Richardson, J. March 26, 1980	J. C. Penney	R63/2951, etc.	Export value	Appraised unit values less 7.5%, net packed	Agreed statement of facts	Portland, Oreg. Tubing mats
R80/88	Richardson, J. March 26, 1980	J. C. Penney	R64/13948, etc.	Export value	F.o.b. unit invoice prices plus 20% of difference between f.o.b. unit invoice prices and appraised values	Agreed statement of facts	San Francisco Tubing mats

R80/89	Richardson, J. March 26, 1980	J. C. Penney	R64/14156, etc.	Export value	F.o.b. unit invoice prices plus 20% of difference between f.o.b. unit invoice prices and appraised values	Agreed statement of facts	New Orleans Tubing mats
R80/90	Richardson, J. March 26, 1980	J. C. Penney	R64/15256, etc.	Export value	F.o.b. unit invoice prices plus 20% of difference between f.o.b. unit invoice prices and appraised values	Agreed statement of facts	Baltimore Tubing mats
R80/91	Richardson, J. March 26, 1980	J. C. Penney	R64/17382	Export value	Appraised unit values less 7.5%, net packed	Agreed statement of facts	San Diego Tubing mats
R80/92	Richardson, J. March 26, 1980	J. C. Penney	R65/179, etc.	Export value	Appraised unit values less 7.5%, net packed	Agreed statement of facts	Wilmington, N.C. Tubing mats
R80/93	Richardson, J. March 26, 1980	J. C. Penney	R65/2707, etc.	Export value	F.o.b. unit invoice prices plus 20% of difference between f.o.b. unit invoice prices and appraised values	Agreed statement of facts	Wilmington, N.C. Hand hooked rugs
R80/94	Richardson, J. March 26, 1980	J. C. Penney	R65/12016, etc.	Export value	F.o.b. unit invoice prices plus 20% of difference between f.o.b. unit invoice prices and appraised values	Agreed statement of facts	Seattle Tubing mats
R80/95	Richardson, J. March 26, 1980	Trans World Shipping	R59/16102, etc.	Export value	F.o.b. unit invoice prices plus 20% of difference between f.o.b. unit invoice prices and appraised values	Agreed statement of facts	New York Sewing machine heads

DECISION NUMBER	JUDGE & DATE OF DECISION	PLAINTIFF	COURT NO.	BASIS OF VALUATION	UNIT OF VALUE	BASIS	PORT OF ENTRY AND MERCHANDISE
R80/96	Re, C. J March 28, 1980	Adorence Co. Inc.	73-8-02226	Export value	Appraised values shown on entry papers less those additions included in appraised values to reflect currency revaluation	C.B.S. Imports Corp. v. U.S. (C.D. 4739)	New York Various articles
R80/97	Re, C. J. March 28, 1980	Korvettes, Division of Arlen Realty & Development Corp.	72-12-02499, etc.	Export value	Appraised values shown on entry papers less those additions included in appraised values to reflect currency revaluation	C.B.S. Imports Corp. v. U.S. (C.D. 4739)	New York Various articles
R80/98	Re, C.J. March 28, 1980	Korvettes, Division of Arlen Realty & Development Corp.	73-1-00296, etc.	Export value	Appraised values shown on entry papers less those additions included in appraised values to reflect currency revaluation	C.B.S. Imports Corp. v. U.S. (C.D. 4739)	New York Various articles
R80/99	Re, C.J. March 28, 1980	Korvettes, Division of Arlen Realty Development Corp.	77-9-03904, etc.	Export value	Appraised values shown on entry papers less those additions included in appraised values to reflect currency revaluation	C.B.S. Imports Corp. v. U.S. (C.D. 4739)	New York Various articles

R80/100	Richardson, J. March 28, 1980	J. E. Bernard & Co. Inc.	76-3-00780	Constructed value	Invoice units of value, plus amounts for ocean freight from Japan to Canada, and freight charges to U.S., packed, as set forth in invoices, or in those instances where ocean freight and shipping charges are not set forth, at invoice units of value, plus 10%, packed	Agreed statement of facts	Boston Auto tape players

Recent Unpublished Customs Service Decisions

The following listing of recent administrative decisions issued by the Office of Regulations and Rulings, U.S. Customs Service, and not otherwise published, is published for the information of Customs officers and the importing community. Although the decisions are not of sufficient general interest to warrant publication as Treasury decisions, the listing describes the issues involved and is intended to aid Customs officers and concerned members of the public in identifying matters of interest which recently have been considered by the Office of Regulations and Rulings.

A copy of any decision included in this listing, identified by its date and file number, may be obtained in a form appropriate for public distribution upon written request to the Office of Regulations and Rulings, attention: Legal Reference Area, room 2404, U.S. Customs Service, 1301 Constitution Avenue NW., Washington, D.C. 20229. These copies will be made available at a cost to the requester of 10 cents per page. However, the Customs Service will waive this charge if the total number of pages copied is 10 or less.

Decisions listed in earlier issues of the CUSTOMS BULLETIN, through December 21, 1979, are available in microfiche format at a cost of $17.70 (15 cents per sheet of fiche). It is anticipated that additions to the microfiche will be made quarterly and subscriptions are available. Requests for the microfiche now available and for subscriptions should be directed to the Legal Reference Area. Subscribers will automatically receive updates as they are issued and will be billed accordingly.

Dated: April 4, 1980.

JOHN T. ROTH,
Acting Director,
Regulations and Research Division.

Date of decision	File No.	Issue
3-18-80	104349	Vessels: Clearance requirements applicable to mobile offshore drilling rig operating on the outer Continental Shelf
2-29-80	104496	Carrier control: Proscribed carriage of feed grain by foreign vessel between points in the United States
3-17-80	711967	Country-of-origin marking: Television sets assembled in Mexico which consists of Korean-made and American-made parts
3-20-80	712493	Country-of-origin marking: Watches
2-19-80	055364	Classification: Disposable surgical gowns (256.87)
3-13-80	060833	Classification: Reconstituted orange juice (165.30, 806.20)
3-13-80	060890	Classification: Laminated fabric (355.81, 355.82)
2-26-80	060980	Classification: Solution of gallium chloride and hydrochloric acid (423.96, 864.30)
2-15-80	061519	American selling price: Men's jute mesh, casual slip-on shoe (700.60)
2-27-80	061721	Classification: Radio remote controlled model vehicles (685.60, 737.07, 737.15, 737.95)
3- 5-80	061805	Classification: Building toys (737.55, 737.95)
3- 5-80	061808	Classification: Building toys (737.55, 737.95)
3-18-80	061842	Classification: Christmas tree ornaments (364.22, 386.06)
2-25-80	061843	Classification: Curtain panels made from lace fabric (365.50, 365.86)
3-18-80	062592	Classification: Radio remote controlled model vehicle (685.60, 737.07, 737.15)
3- 5-80	062738	Classification: Figures of the seven dwarfs (737.22, 737.40)
3-10-80	062995	Classification: Frozen fish which have been scaled, headed and gutted (110.35, 110.40, 110.45)
2-28-80	064037	Classification: Cannister for gin bottle; usual container
3-18-80	064069	Classification: Blouse with lace edging (382.00, 382.04)
2-26-80	064150	Classification: Double-sided metalized paper (253.45, 256.30)
3- 4-80	064183	Classification: Plastic umbrella case (706.60)
3- 5-80	064442	Classification: Nativity set of wood (207.00)

International Trade Commission Notices

Investigations by the U.S. International Trade Commission

DEPARTMENT OF THE TREASURY

The appended notices relating to investigations by the U.S. International Trade Commission are published for the information of Customs officers and others concerned.

R. E. CHASEN,
Commissioner of Customs.

In the Matter of CERTAIN TURNING MACHINES AND COMPONENTS THEREOF	Investigation No. 337-TA-72

Notice of Commission Determination Denying the Presiding Officer's Recommended Partial Summary Determination of Noninfringement

On February 1, 1980, the presiding officer certified to the U.S. International Trade Commission a recommended partial summary determination of no literal infringement of claims 1, 2, 3, 8, 10, 14, 18, 19, and 22 of U.S. Reissue Patent No. 29,612 in the Commission's investigation under section 337 of the Tariff Act of 1930 (19 U.S.C. 1337) of alleged unfair methods of competition and unfair acts in the importation and sale of certain turning machines and components thereof in the United States. This recommendation resulted from a motion filed on December 28, 1979, by respondents Yamazaki Machinery Works Ltd., and Yamazaki Machinery Corp. (motion docket No. 72-7).

The Commission determined on March 28, 1980, that the motion for partial summary determination of noninfringement of certain claims of U.S. Reissue Patent No. 29,612 is denied because genuine issues of material fact remain. (19 CFR 210.50).

Accordingly, it is Ordered That—

(1) Respondents' motion for partial summary determination be denied; and

(2) Since genuine issues of material fact still exist, the matter on infringement be remanded to the presiding officer to develop a record on all issues and to continue adjudication on that case, in particular—

(a) with respect to the claims requirement that the carrier and carrier support means be disposed alongside the rotatable member, that a record be developed as to whether an addition of a tailstock extends the spindle's location vis-a-vis the carrier;

(b) with respect to the claims requirement that the tool turret and tool support be movable toward the carrier from a retracted position to a maximum advanced position, that a record be developed as to whether respondents' turning machine may affect machining while moving toward the carrier; whether the workstroke toward the carrier must be simultaneous toward the spindle; and whether machining may be done in the X-axis by respondents' turning machine.

Copies of the presiding officer's recommendation and the Commission's action, order, and memorandum opinion and all other public documents relative to this investigation may be obtained by contacting the Office of the Secretary to the Commission, 701 E Street NW., Washington, D.C. 20436; telephone 202–523–0161.

By order of the Commission.

Issued: April 2, 1980.

KENNETH R. MASON,
Secretary.

In the Matter of CERTAIN AIRTIGHT, CAST-IRON STOVES	Investigation No. 337–TA–69

Amended Notice of Termination

The following notice amends the notice of termination issued by the U.S. International Trade Commission on March 26, 1980, and published in the Federal Register, which had several words inadvertently omitted:

Upon consideration of the presiding officer's recommendation and the record in this proceeding, the Commission is ordering the termination of investigation No. 337–TA–69, "Certain Airtight, Cast-Iron Stoves," as to respondents Radke Imports, Inc., and Tetro Imports,

by granting the motion (motion docket No. 69–7) by the Commission investigative attorney to terminate this investigation as to those two respondents, after having determined that such respondents are not currently in violation of section 337 of the Tariff Act of 1930, as amended. The motion to terminate was unopposed by the complainants, Jotul, Inc., and Kristia Associates.

The order is effective as of March 26, 1980.

Any party wishing to petition for reconsideration of the Commission's action must do so within 14 days of service of the Commission order and Commissioners' opinion(s). Such petitions must be in accord with Commission rule 210.56 (19 CFR 210.56).

Copies of the Commission's action and order, the Commissioners' opinion(s), and any other public documents in this investigation are available to the public during official working hours (8:45 a.m. to 5:15 p.m.) in the Office of the Secretary, U.S. International Trade Commission, 701 E Street NW., Washington, D.C. 20436; telephone 202–523–0161.

Notice of the institution of this investigation was published in the Federal Register of July 12, 1979 (44 F.R. 40732).

Issued: April 1, 1980.

KENNETH R. MASON,
Secretary.

In the Matter of CERTAIN ROTARY SCRAPING TOOLS	Investigation No. 337–TA–62

Order

On January 23, 1980, the U.S. International Trade Commission received a petition from the Thompson Tool Co., Inc., complainant in investigation 337–TA–62, requesting reconsideration in part of the Commission's determination, order, and opinion in this investigation. The Commission hereby denies complainant's petition for the reasons set forth in the memorandum opinion below.

By order of the Commission.

Issued: March 31, 1980.

KENNETH R. MASON,
Secretary.

In the Matter of CERTAIN ANAEROBIC IMPREGNATING COMPOSITIONS AND COMPONENTS THEREFOR	Investigation No. 337-TA-71

Order Granting Complainant's Motion for an Additional 2 Weeks in Which To File Exceptions to Recommended Determination

Having reviewed and considered motion docket No. 71-43 wherein complainant Loctite Corp. requests an additional 2 weeks in which to file exceptions to the presiding officer's recommended determination issued on March 12, 1980, THE COMMISSION HEREBY ORDERS THAT—

(1) The period within which complainant Loctite Corp. may file exceptions to the presiding officer's recommended determination of March 12, 1980, is extended until the close of business, April 8, 1980; and

(2) The Secretary serve a copy of this Commission order upon each party of record to this investigation.

By order of the Commission:

Dated: March 31, 1980.

KENNETH R. MASON,
Secretary.

(19 CFR Parts 210 and 211)

Supplementary Procedures—Investigations of Unfair Practices in Import Trade

AGENCY: U.S. International Trade Commission.

ACTION: Proposed rules.

SUMMARY: These proposed rules would amend part 210 of the Commission's Rules of Practice and Procedure to provide additional procedures for the termination of investigations under section 337 of the Tariff Act of 1930 (19 U.S.C. 1337). A new part 211 is proposed to provide procedures for consent orders and to provide for certain nonadjudicative proceedings incident to the exercise of Commission jurisdiction under section 337. The previous Commission proposed rulemaking on this subject, 43 F.R. 2883-2889 (January 20, 1978) is hereby withdrawn. These new proposed rules reflect public comments on the original proposal and also the experience gained by the Commission in connection with consent orders and enforcement proceedings in the interim.

DATES: Comments will be considered if received within 45 days of the date of this notice. Comments should conform with Commission rule 201.8 (19 CFR 201.8) and should be addressed to Kenneth R. Mason, Secretary, U.S. International Trade Commission, Washington, D.C. 20436.

FOR FURTHER INFORMATION CONTACT: Edward M. Lebow, Esq., Office of the General Counsel, U.S. International Trade Commission, 701 E Street NW., Washington, D.C.; telephone 202–523–0486.

SUPPLEMENTARY INFORMATION: In the exercise of its jurisdiction under section 337 of the Tariff Act of 1930 (19 U.S.C. 1337), the Commission is authorized to conduct proceedings supplemental to the formal adjudicative investigations provided for by part 210 of the Commission's Rules of Practice and Procedure (19 CFR, part 210). The proceedings may be authorized in part by other statutes, such as the Administrative Procedure Act (5 U.S.C. 551, et seq.) in the case of consent orders, and section 603 of the Trade Act of 1974 (19 U.S.C. 2482) in the case of preliminary investigations, as well as by 19 U.S.C. 1333. The Commission's rules at present do not provide for these supplemental proceedings.

The purpose of these proposed amendments to the Commission's rules is to revise the format of subchapter C, chapter II, title 19, Code of Federal Regulations, to provide for these supplemental procedures, by dividing the subchapter into three parts. A new part 209, to provide procedures for the conduct of informal inquiries and preliminary investigations, will be the subject of subsequent rulemaking. Amendments to part 210 of the Commission's rules to provide for certain procedures in the termination of an adjudicative investigation are proposed here. Also proposed is a new part 211, to provide procedures for consent orders and for the administration of the Commission's enforcement authority.

EXPLANATION OF PROPOSED RULES

Section 210.51 Termination of investigation.

Section 210.51 is amended by slightly altering the first sentence of subsection (a), striking the last sentence of subsection (a) and striking subsection (c), and adding new subsections (c), (d), (e). The effect of these amendments is to provide specifically in settlements by licensing or other agreement and consent order settlements for the termination of an investigation in the manner provided in subsection (c).

Subsection (c)(1) requires that a motion to terminate based upon a licensing or other agreement be accompanied by a copy of the agreement, as well as any related agreements, and an affidavit stating that there are no other agreements concerning the subject matter of the disclosed agreement. This provision is intended to allow the Com-

mission to safeguard the public interest, including competitive conditions in the U.S. economy, in its consideration of these agreements. Subsection (c)(2) of amended section 210.51 provides that an investigation shall be terminated on the basis of a licensing or other agreement without determining whether there is a violation of section 337.

Subsection (d) of the amended rule provides for termination of an investigation on the basis of a consent order agreement that complies with the requirements of new section 211.20(b). An order of termination based upon a consent order agreement would not constitute a determination of whether there is a violation of section 337.

Section 210.55 Commission determination and action.

This section has been amended to make it clear that the Commission's obligation to make a determination is subject to and does not transcend its duty under the Administrative Procedure Act to permit the settlement of disputes as provided in section 210.51.

Section 210.56 Implementation of Commission action. (Present sections 210.56 and 210.57 are redesignated sections 210.57 and 210.58, respectively.)

This section provides for the procedural implementation of section 337(g) to establish the effective and final date of Commission action, including consent and enforcement orders, pending possible Presidential disapproval.

Subsection (b) provides for the publication and transmittal to the President of affirmative determinations under section 337 together with the action taken. The new subsection also provides for the transmittal to the President of consent settlement and enforcement orders for his review and possible disapproval on policy grounds.

Subsection (c) provides that when the Commission either makes an affirmative determination of violation in a section 337 investigation, issues a consent order or attempts to enforce either one, the Commission's action will become effective upon publication in the Federal Register. Those articles that are subject to either an exclusion order or a cease and desist order may be permitted to enter the country under bond until Presidential review has taken place.

As provided in subsection (d), if the President does not disapprove of a Commission action within 60 days of the date of his being notified of such action, or if he states his approval of the action before that date, then the Commission's action will become final the day after the end of the review period or the day that he notifies the Commission of his approval.

Should the President disapprove the Commission action under subsection (e), the Commission's action will be considered of no effect.

Should the President disapprove a consent order, the Commission may either take a new action, i.e., issue a new consent order or obtain a licensing agreement, or it could resume the investigation. In case the Commission decides to do the latter and continue with the investigation, the period of Presidential review will not be included for purposes of the statutory time limits for concluding the investigation as established by section 210.17.

PART 211

Section 211.01 Purpose.

This part sets forth procedures for the settlement by consent of matters which may involve a violation of section 337 and for the enforcement, modification, and revocation of final Commission actions.

SUBPART A—INFORMAL ENFORCEMENT PROCEDURE

Section 211.10 Informal disposition through voluntary compliance.

Section 211.10 provides a procedure whereby the Commission may accept assurances from a private party that it will desist from engaging in practices which may violate section 337. Subsection (b) requires that the Commission consider, in determining whether to accept the assurances of the party in question, such factors as the nature and gravity of the practice, the likelihood of its recurring, the prior record and good faith of the party, and the adequacy of the proffered assurances.

SUBPART B—CONSENT ORDER PROCEDURE

Section 211.20 Opportunity to submit proposed consent order.

Subsection (a) provides for an opportunity to submit to the Commission a proposed consent order prior to the institution of a formal investigation under section 337.

Subsection (b) sets forth the procedures for the submission of proposals to settle a matter by consent subsequent to institution of a formal investigation under section 337. Such a proposal must be filed as a motion with the presiding officer and incorporate the elements of a consent order agreement set forth in section 211.22. The motion, except for good cause shown, must be filed prior to the commencement of the hearing prescribed by section 210.41(e)(1). The presiding officer must certify the motion to the Commission promptly, together with his or her recommendation. Pending disposition, a party may not withdraw from a consent order agreement.

Section 211.21 Settlement by consent.

Section 211.21 sets forth the procedure for Commission action after a consent order agreement has been filed with it under section 211.20(a)

or certified to it by the presiding officer under section 211.20(b). The Commission is required to publish the consent order agreement in the Federal Register for 30-days' public comment. Copies are also to be served on the Department of Health, Education, and Welfare, the Department of Justice, the Federal Trade Commission, and such other departments as the Commission deems appropriate. The Commission may also conduct within the 30 day period such hearings as it deems appropriate. Thereafter, within an additional 20 days and after considering the effect of the consent order upon the public health and welfare, competitive conditions in the U.S. economy, the production of like or directly competitive articles in the United States, and U.S. consumers, in the manner provided by section 210.14(a)(4) of part 210, the Commission must either: (1) Accept the agreement, issue the consent order, and terminate the investigation; (2) reject the agreement and deny the motion; or (3) take such other action as it deems appropriate. In event the Commission rejects the proposed agreement, the parties are not bound by their proposal in later actions before the Commission.

Section 211.22 Contents of consent order.

This section sets forth the required contents of a consent order agreement, including an admission of all jurisdictional facts, a waiver of judicial review, contest, or challenge of the consent order, and a statement making enforcement, modification, and revocation of the consent order explicitly subject to subpart C of part 211 of these rules.

SUBPART C—ENFORCEMENT, MODIFICATION, AND REVOCATION

Section 211.50 Applicability, purpose, and retroactivity.

The "applicability" and "purpose" subsections are self-explanatory. This subpart is intended to serve as the basis for all changes in final Commission actions. This subpart is not limited to enforcing cease and desist orders. Dissolving orders that have ceased to serve a useful purpose, such as exclusion orders, is also contemplated. The rules also include temporary relief orders, but no other interlocutory orders are included. Final Commission actions have to undergo the rigors of the law relating to appeals (subsec. 337(c)) and Presidential review (subsec. 337(g)). However, this does not mean, when an adversely affected person fails to appeal a final Commission action, or appeals and then loses, that it may later collaterally attack the original action when that action is altered pursuant to these rules. In such a situation, it would appear that a court challenge, if any, can only attack the changed action.

The rules contain a "savings" provision, which serves to keep whole existing consent orders.

Section 211.51 Information gathering.

The power to gather information relating to the operation of a final Commission action is set out here. Any reporting provided for by law is permitted if it will either aid the Commission to determine "whether and to what extent there is compliance with the action" or "whether and to what extent the conditions which led to the action are changed." The first of these relates to cease and desist orders.

The second condition, which is adapted from subsection 337(h), may relate to any kind of final Commission action. One example of such changed circumstances is when the holder of a domestic patent ceases to produce articles domestically that are the subject of an exclusion order. In that case revocation of the exclusion order may then be appropriate.

Final Commission actions may also include provisions for gathering information by any other means provided by law, such as gaining access to records, copying records, and requiring persons to produce books or papers (19 U.S.C. 1333(a)). This rule also provides for the collection of information from voluntary sources.

Under subsection (b), the Commission is empowered to prescribe the form and detail of reporting. This implements 19 U.S.C. 1333. Under subsection (c), information gathering is enforceable in court or by any other means available to enforce the final action. In subsection (d), discretion is kept to set the terms of informational requirements of a final action. This would allow for the adjustment of reporting requirements to meet the needs of individual cases and changes in international trade.

Section 211.52 Confidentiality of information.

This section provides that information received pursuant to a final action may be held in confidence and that such protective orders as are necessary may be issued.

Section 211.53 Review of reports.

This section sets forth the Commission's general authority to review reports and take further appropriate action.

Section 211.54 Advice to persons submitting information.

Advice to persons reporting may be sufficient in some cases. When a cease and desist order is involved, and compliance with the order is the primary objective of reporting, then advising persons that their reporting evidences noncompliance may be an effective means of gaining compliance. The Federal Trade Commission appears to reserve the right to exercise this option (16 CFR 3.61(a)).

Section 211.55 Modification of information requirements.

Modification of reporting requirements will facilitate focusing on problems which require special study in order to determine how the oversight function will be exercised. It may also be used to document facts that justify change in a final order. Modifiying reporting requirements will also assure compliance with many cease and desist orders. Finally, it will facilitate altering or abolishing reporting schemes that have proved useless, unreasonably burdensome, or undesirable for other reasons. The rule would allow any person to request changes in reporting requirements, which may be handled publicly or not, as conditions warrant.

Section 211.56 Proceedings to enforce, modify, revoke or substitute for final Commission actions.

This section represents a procedural framework for fundamental change in final Commission actions. Such matters may be handled informally by letter or conference under subsection (a) or after formal enforcement proceedings under subsection (b) by complaint, followed by answer and then a decision. The formal procedures are adapted from existing rules of other Federal agencies that conduct their own enforcement proceedings short of court action. This procedure is aimed primarily at enforcement (by modification or revocation and exclusion) of cease and desist orders, temporary cease and desist orders, and consent orders. Parties to section 337 proceedings who want cease and desist orders or exclusion orders revoked or modified because of changed circumstances may seek modification or revocation by a simpler process of motion and answer under subsection (c) of this section. The less formal subsection (c) would be appropriate in circumstances in which a former complainant is no longer prosecuting his patent domestically or public interest factors require a change in an outstanding Commission order.

Upon conclusion of the enforcement process, which may include a hearing, a modified cease and desist order may issue or the existing final Commission action may be replaced with an exclusion order. Where a violation is found under subsection (b), any new and more restrictive Commission order would be subject to public interest determinations, bonding, Presidential review, and court review (although not on the original record of the sec. 337 investigation).

Section 211.57 Temporary emergency action.

This section provides for temporary emergency relief action. Thus, when patterns of trade are changing rapidly or enforcement is needed immediately to be effective, a cease and desist order could be revoked

and temporarily replaced by exclusion or any other temporary measure allowed by the law if certain criteria are met. It must be evident that violations will occur or that temporary measures pending docketing of a formal complaint under section 211.56 are necessary to accomplish the purpose of section 337. This section applies to all types of final Commission actions.

Section 211.58 Notice of enforcement action to government agencies.

Notice to Federal agencies is essential to the proper functioning of these rules. Under subsection 337(b), government agencies have a role in Commission section 337 proceedings. These rules are supplementary to section 337, and therefore the agencies should have a role here, too. Furthermore, advice to the Secretary of the Treasury when an exclusion order of any type is made or revoked is required by subsections 337(d), 337(e), and 337(h).

The revised rules proposed by the Commission are set forth below.

Chapter II, title 19, of the Code of Federal regulations would be amended as follows:

(1) Subchapter C of 19 CFR chapter II would be retitled "Investigations of Unfair Practices in Import Trade";

(2) Part 210 of subchapter C would be retitled "Adjudicative Procedures";

(3) Present sections 210.56 and 210.57 of part 210 would be redesignated sections 210.57 and 210.58 of part 210, respectively;

(4) New section 210.56 would be added, and present sections 210.51 and 210.55 would be amended; and

(5) New part 211, entitled "Enforcement Procedures," consisting of subparts A, B, and C would be added. The new rules that correspond to this enumeration, which are hereby proposed, are as follows:

Section 210.51 Termination of investigation.

(a) *Motions for termination.*—Any party may move at any time for an order to terminate an investigation under this part, to terminate the investigation as to all issues in an investigation in regard to one or more but not all of the respondents, or to terminate the investigation as to any of the issues in regard to any or all of the respondents.

(b) *Default.*—Upon the occurrence of the condition of default, an investigation before the Commission may be terminated as to one or more of the parties in the investigation.

(c) *Settlement by licensing or other agreement.*—(1) When a complaint is filed alleging patent, trademark, or copyright infringement, or a misappropriation of trade secrets or technical know-how, an investigation before the Commission directed to such subject matter may be terminated as provided in subsection (a) of this section on the basis

of a licensing or other agreement entered into between the complainant (all of the complainants if there is more than one) and one or more of the respondents. A motion for termination by such parties shall contain copies of the licensing or other agreement and any agreements supplemental thereto and an affidavit executed by the parties stating that there are no other agreements, written or oral, expressed or implied, between such parties concerning the subject matter of the investigation.

(2) The licensing or other agreement and any agreements supplemental thereto, and affidavit shall be certified by the presiding officer to the Commission with his recommendation. An order of termination based upon such licensing or other agreement shall not constitute a determination of the Commission under section 210.55.

(d) *Consent order settlement.*—An investigation before the Commission may be terminated as provided in subsection (a) of this section on the basis of a consent order settlement under section 211.20(b). An order of termination based upon such a settlement shall not constitute a determination of the Commission under section 210.55.

(e) *Effect of termination.*—Except as provided in subsections (c) and (d) of this section, an order of termination issued by the Commission shall constitute a determination of the Commission under section 210.55, and an order of termination issued by the presiding officer (when not the Commission) shall constitute a recommended determination of the presiding officer under section 210.53.

Section 210.55 Commission determination and action.

(a) *Review of recommended determination.*—Subject to sections 210.51 and 210.54, upon receipt of a recommended determination and the record under section 210.53, the Commission shall review the same and determine, as the case may be, whether there is a violation of section 337 or whether there is reason to believe that there is such a violation, and, when appropriate, whether any action (exclusion of articles from entry, exclusion of articles from entry except under bond, or cease and desist order) is in the public interest and should be ordered, and the amount of any bond required.

(b) *When the presiding officer is the Commission.*—When the Commission has presided at the taking of evidence, it shall determine, as the case may be, whether there is a violation of section 337 or whether there is reason to believe there is such a violation, and, when appropriate, whether any actions (exclusion of articles from entry, exclusion of articles from entry except under bond, or cease and desist order) is in the public interest and should be ordered, and the amount of any bond required.

Section 210.56 Implementation of Commission action.

(a) *Service of Commission determination upon the parties.*—A Commission determination pursuant to section 210.55 or a termination on the basis of a licensing or other agreement or consent settlement pursuant to sections 210.51 (c) and (d), respectively, shall be served upon each party to the investigation.

(b) *Publication and transmittal to the President.*—A Commission determination that there is a violation of section 337, or that there is reason to believe that there is such a violation, together with the action taken, relative to such determination, or Commission action pursuant to subparts B and C of part 211 shall be immediately (1) published in the Federal Register, and (2) transmitted to the President together with the record upon which the action is based.

(c) *Effective date of Commission action.*—Commission action, consisting of the Commission determination and action taken under section 210.55, or action taken under subparts B and C of part 211, shall be effective upon publication thereof in the Federal Register, except that articles directed to be excluded from entry or subject to a cease and desist order shall be entitled to entry under bond determined by the Commission until such determination and action become final in the manner specified in subsections (d) and (e) of this section.

(d) *Finality of affirmative Commission action.*—If the President does not disapprove for policy reasons such Commission action within a period of 60 days beginning on the day after the day on which a copy of such Commission action is delivered to the President, or if the President notifies the Commission before the close of such period that he approves such Commission action, then such Commission action shall become final on the day after the close of such period, or the day on which the President notifies the Commission of his approval, as the case may be.

(e) *Disapproval by the President.*—If, before the close of such period, the President notifies the Commission of his disapproval of the Commission action for policy reasons, then effective on the date the Commission receives such notice such Commission action shall have no force or effect. Within 10 days following such disapproval any party may by motion request the Commission to consider other appropriate action in light of and consistent with the Presidential disapproval. The Commission may in its discretion conduct such further proceedings as it deems appropriate. Any new Commission action shall be served upon the parties, published in the Federal Register, and referred to the President. Unless such new action is disapproved by the President, it will become effective and final. Subsequent to the President's disapproval of a consent order settlement, the Commission may

resume its investigation in conformity with these rules. Should the Commission resume an investigation subsequent to a Presidential disapproval, then for the purpose of section 210.10 the period of time during which the consent order was effective shall be excluded from all applicable time restrictions.

(f) *Duration.*—Final Commission action shall remain in effect as provided in subpart C of part 211.

Section

PART 211—ENFORCEMENT PROCEDURES [1]

211.01 Purpose.

SUBPART A—INFORMAL ENFORCEMENT PROCEDURE

211.10 Informal disposition through voluntary compliance.

SUBPART B—CONSENT ORDER PROCEDURE

211.20 Opportunity to submit proposed consent order.
211.21 Settlement by consent.
211.22 Contents of consent order agreement.

SUBPART C—ENFORCEMENT, MODIFICATION, AND REVOCATION OF FINAL COMMISSION ACTIONS

211.50 Applicability, purpose, and savings.
211.51 Information gathering.
211.52 Confidentiality of information.
211.53 Review of reports.
211.54 Advice to persons submitting information.
211.55 Modification of information requirements.
211.56 Proceedings to enforce, modify, revoke or substitute for final Commission actions.
211.57 Temporary emergency action.
211.58 Notice of enforcement action to government agencies.

[1] The provisions of this part 211 are issued under secs. 333, 335, and 337 of the Tariff Act of 1930, as amended (19 U.S.C. 1333, 1335, and 1337), and sec. 603 of the Trade Act of 1974 (19 U.S.C. 2482).

Section 211.01 Purpose.

This part sets forth procedures for the settlement by consent of matters which may involve a violation of section 337 and for the enforcement, modification, and revocation of final Commission actions. Definitions applicable to part 210 apply to this part unless specifically provided otherwise.

SUBPART A—INFORMAL ENFORCEMENT PROCEDURES

Section 211.10 Informal disposition through voluntary compliance.

(a) *Opportunity for informal disposition.*—The Commission, when it has information obtained during the course of an informal inquiry or preliminary investigation pursuant to section 603 of the Trade Act of 1974 (19 U.S.C. 2482) indicating that a person may be engaging in a practice which may involve a violation of section 337, may afford

such person the opportunity to have the matter disposed of on an informal administrative basis, if the Commission deems that the public interest factors set forth in section 210.14(a)(2) will be fully safeguarded thereby.

(b) *Public interest factors to be considered.*—In determining whether the public interest factors set forth in section 210.14(a)(2) will be fully safeguarded through such informal administrative action the Commission will consider—

(1) The nature and gravity of the practice;

(2) Whether the practice is likely to recur;

(3) The prior record and good faith of the person involved;

(4) The adequacy of assurance of voluntary compliance; and

(5) Any other relevant factor that the Commission deems appropriate.

SUBPART B—CONSENT ORDER PROCEDURE

Section 211.20 Opportunity to submit proposed consent order.

(a) *Prior to institution of investigation.*—Where time, the nature of the proceeding, and the public interest permit, any person being investigated pursuant to section 603 of the Trade Act of 1974 (19 U.S.C. 2482) or section 210.11(b) shall be afforded the opportunity to submit to the Commission a proposal for disposition of the matter under investigation in the form of a consent order agreement which incorporates a proposed consent order executed by or on behalf of such person, all complainants, and an attorney employed by the Commission and complying with the requirements of section 211.22.

(b) *Subsequent to institution of an investigation.*—In investigations under section 337, a proposal to settle a matter by consent shall be submitted as a motion to the presiding officer to terminate an investigation under section 210.51, together with a consent order agreement which incorporates a proposed consent order. The proposed consent order agreement shall comply with the requirements of section 211.22. The motion may be filed at any time prior to commencement of a hearing as provided in section 210.41(a)(1) jointly by all of: (1) All private complainants, (2) the Commission investigative attorney, and (3) one or more respondents. The Commission may, however, upon request and for good cause shown, consider such a motion certified to it by the presiding officer during the course of a hearing. The presiding officer shall certify the motion to the Commission promptly together with his recommendation after service of such motion. The filing of the motion shall not stay proceedings before the presiding officer unless the presiding officer or the Commission shall so order. For the purpose of the time limits for the completion of the hearing set forth in

section 210.41(e)(1), there shall be excluded any period of time during which the proceeding is stayed by order of the Commission. Pending disposition by the Commission (and review by the presiding officer) of a consent order agreement, a party may not withdraw from the consent order agreement once it has been submitted pursuant to this section.

Section 211.21 Settlement by consent.

After the motion for termination based on a consent order agreement has been filed with the Commission pursuant to section 211.20(a) or certified to the Commission by the presiding officer pursuant to section 211.20(b) the Commission shall: Promptly publish notice of such motion along with the consent order agreement (with confidential information deleted) in the Federal Register and for a period of 30 days thereafter receive and consider any comments concerning the consent order agreement that may be filed by interested persons. Publication of the proposed consent order agreement shall not be deemed to constitute acceptance, provisional or otherwise, of such agreement. The Commission shall make available a summary of the provisions of the consent order agreement and the relief to be obtained thereby and any other information which it deems helpful in assisting interested persons to understand the terms of the consent order agreement. Notice may also be made through whatever other medium the Commission deems necessary. The Commission shall promptly serve notice of the proposed consent order agreement on the Department of Health, Education and Welfare, the Department of Justice, and the Federal Trade Commission, and such other departments as the Commission deems appropriate. During the 30-day comment period the Commission may conduct such public proceedings with regard to the notice of proposed consent order agreement as it deems appropriate. Thereafter, within an additional period of 20 days, the Commission shall, after considering the effect of the consent order upon the public health and welfare, competitive conditions in the U.S. economy, the production of like or directly competitive articles in the United States, and U.S. consumers, in the manner provided by section 210.14(a)(4), either (1) accept the agreement, issue the consent order, and terminate the investigation; (2) reject the agreement and deny the motion; or (3) take such other action as it deems appropriate. The Commission shall publish notice of its action together with a statement of reasons in support thereof in the Federal Register. The Commission shall serve notice of its action together with the statement of reasons on all parties. Should the Commission reject the proposed agreement and deny the motion, the parties are in no way bound by their proposal in later actions before the Commission.

Section 211.22 Contents of consent order agreement.

(a) *Contents.*—Every consent order agreement shall contain, in addition to the appropriate proposed consent order: (1) An admission of all jurisdictional facts; (2) an express waiver of all rights to seek judicial review or otherwise challenge or contest the validity of the consent order; and (3) a statement that the enforcement, modification, and revocation will be carried out pursuant to subpart C of part 211, incorporating by reference the Commission's Rules of Practice and Procedure. The consent order agreement may contain a statement that the signing thereof is for settlement purposes only and does not constitute admission by any party that section 337 has been violated.

(b) *Effect, interpretation, and reporting.*—The consent order shall have the same force and effect and may be enforced, modified, or revoked in the same manner as is provided in section 337 and parts 210 and 211 for other Commission action. Except as otherwise provided in the agreement, the complaint and notice of investigation or the proposed complaint, as the case may be, may be used in construing the terms of the consent order, but no agreement, understanding, representation or interpretation not contained in the consent order agreement or Commission decision accompanying the consent order may be used to vary the terms of the consent order. The Commission may require periodic compliance reports pursuant to subpart C of part 211 to be submitted by the person entering into the consent order agreement.

SUBPART C—ENFORCEMENT, MODIFICATION, AND REVOCATION OF FINAL COMMISSION ACTIONS

Section 211.50 Applicability, purpose, and retroactivity.

(a) *Applicability.*—The rules in this subpart apply to final Commission actions issued by the Commission under section 337, including exclusion orders, temporary exclusion orders, and cease and desist orders (cease and desist orders, for purposes of this subpart, means cease and desist orders, temporary cease and desist orders, and consent orders).

(b) *Purpose.*—The purpose of this subpart is to set forth procedures for the enforcement, modification, and revocation of final Commission actions.

(c) *Retroactivity.*—The rules in this subpart apply to final Commission actions taken before the effective date of these rules only to the extent not inconsistent with such final actions.

Section 211.51 Information gathering.

(a) *Power to require information.*—Whenever the Commission takes a final Commission action, it may attach to such action (or in the case

of a consent order, approve) terms and conditions requiring any person to report to the Commission facts in that person's possession that will aid the Commission in determining whether and to what extent there is compliance with the action or whether and to what extent the conditions which led to the action are changed. The Commission may also include (or, in the case of a consent order, approve) provisions that exercise any other information gathering power available to it by law. The Commission may at any time request the cooperation of any person or agency in supplying the Commission with information that will aid the Commission in these determinations.

(b) *Form and detail of reports.*—Reports under subsection (a) may be required to be in writing, under oath, and in such detail and in such form as the Commission prescribes. A final Commission action may also contain terms and conditions which exercise, or make possible the exercise of, on conditions precedent, any power of information gathering available to the Commission by law, subject to the standards of subsection (a).

(c) *Power to enforce informational requirements.*—Terms and conditions of final Commission actions for reporting and information gathering, and modifications of such terms and conditions, shall be enforceable by the Commission by a civil action or, at the Commission's discretion, in the same manner as any other provision of the final Commission action is enforced.

(d) *Term of reporting requirement.*—The Commission may prescribe in the final Commission action (or, in the case of a consent order, approve) frequency of reporting or information gathering and the date on which these activities are to terminate. If no date for termination is provided, reporting and information gathering shall terminate when the final Commission action or any amendment to it expires by its own terms or is terminated. The Commission may modify informational requirements of a final Commission action at any time, pursuant to section 211.53 and section 211.55.

Section 211.52 Confidentiality of information.

Confidential information provided to the Commission pursuant to final Commission action will be received by the Commission in confidence. The Commission may, either upon motion or its own initiative, issue such protective orders as it deems necessary.

Section 211.53 Review of reports.

The Commission will review reports submitted pursuant to any final Commission action and conduct such further investigation as it deems necessary, consistent with the action.

Section 211.54 Advice to persons submitting information.

The Commission may, upon request or on its own initiative, advise persons reporting or providing information that their reports or information do not comply with a final Commission action or constitute a reason to modify or revoke such action.

Section 211.55 Modification of information requirements.

The Commission may modify reporting requirements as necessary: (1) To assure compliance with an outstanding action; (2) to take account of changed circumstances; or (3) to minimize the burden of reporting or informational access. A recommendation to modify reporting requirements shall identify the reports involved and state the reason or reasons for modification. No reporting requirement will be suspended during the pendency of such a recommendation unless the Commission orders it. The Commission may, if the public interest warrants, announce that a modification of reporting is under consideration and ask for comment, but it may also modify any reporting requirement at any time without notice, consistent with the standards of this section.

Section 211.56 Proceedings to enforce, modify, revoke or substitute for final Commission actions.

(a) *Informal enforcement proceedings.*—Informal enforcement proceedings may be initiated by the Commission upon complaint or its own motion with respect to any act done or omitted by any person in violation of any provision of a final Commission action. Such matters may be handled by the Commission through correspondence or conference or in any other way which the Commission deems appropriate. The Commission may issue such orders as it deems appropriate to insure compliance with a cease and desist order, or any part thereof. Any matter not disposed of informally may be made the subject of a formal proceeding pursuant to this subpart. The filing of an informal complaint shall not bar the subsequent filing of a formal complaint. Prior to issuing any such order, the Commission may afford interested persons, including members of the Commission's staff, an opportunity to make written or oral presentations with respect to the subject matter of the proposed order.

(b) *Formal enforcement proceedings.*—In order to determine whether a cease and desist order is being violated, the Commission may, either on its own initiative or after the filing by any person of a formal complaint under oath containing information which the Commission has reason to believe demonstrates a material violation of a cease and desist order, institute an enforcement proceeding by docketing a complaint setting forth the alleged violation, and following such

proceeding, modify, revoke, or enforce the order. The complaint, if docketed, shall be served upon the alleged violator and published in the Federal Register.

(1) *Answer.*—Within 15 days after the date of receipt of a complaint docketed pursuant to this subsection, the named respondent shall file an answer to the complaint. Answers shall fully and completely advise the Commission as to the nature of the defense and shall admit or deny each allegation of the complaint specifically and in detail unless the respondent is without knowledge, in which case his answer shall so state and the statement shall operate as a denial. Allegations of fact not denied or controverted shall be deemed admitted. Matters alleged as affirmative defenses shall be separately stated and numbered and shall, in the absence of a reply, be deemed to be uncontroverted. Failure of a respondent to file and serve an answer within the time and in the manner prescribed herein shall authorize the Commission in its discretion, to find the facts alleged in the complaint to be true and to take such action as may be appropriate without notice or hearing, or, in its discretion, to proceed to take evidence, without notice, of the allegations or charges set forth in the complaint, provided that the Commission (or presiding officer, if one is appointed) may permit late filings of an answer for good cause shown.

(2) *Parties to enforcement proceeding.*—The parties to an enforcement proceeding shall be the Commission, the respondent, the complainant, and any other person with an interest sufficient to support intervention in a section 337 investigation under section 210.6.

(3) *Public hearing.*—The Commission, in the course of an enforcement proceeding, may hold a public hearing and afford the parties to the enforcement proceeding the opportunity to appear and be heard.

(4) *Written Statements.*—At any time after a formal complaint under this subsection is published in the Federal Register, any person may submit to the Commission a written statement of information pertinent to the subject matter of the enforcement proceedings. Except in the case of the complaining party and the named respondents(s), such statement may be presented in lieu of an appearance at the hearing. Statements shall conform to the requirements for documents set forth in section 201.8.

(5) *Commission action.*

(i) Upon conclusion of an enforcement proceeding relating to a cease and desist order, the Commission may: (1) Modify the cease and desist order in any manner necessary to prevent the unfair practices which were originally the basis for issuing such order; (2) bring civil actions in U.S. district courts pursuant to section 337(f) requesting the imposition of a civil penalty or the issuance of mandatory injunc-

tions incorporating relief sought by the Commission; or (3) revoke the cease and desist order and direct that the articles concerned be excluded from entry into the United States.

(ii) Prior to effecting any modification, or revocation and/or exclusion under this subsection, the Commission shall consider the effect of such action upon the public health and welfare, competitive conditions in the U.S. economy, the production of like or directly competitive articles in the United States, and U.S. consumers. The Commission may find that, in light of such factors, such action should not be taken. Any such order shall become effective and final as provided in section 210.56 for purposes of setting bond (if applicable), appeal, and Presidential review under section 337. The hearings provided for under this subsection are not subject to sections 554, 555, 556, 557, and 702 of title 5, United States Code.

(c) *Modification or dissolution of final Commission actions due to changed circumstances.*—Whenever any former party believes that changed conditions of fact or law, or the public interest, require that a final Commission action be modified or set aside, in whole or in part, such person may file with the Commission a motion requesting that the Commission do so. The motion shall state the changes desired and the changed circumstances warranting such action, and shall include materials and argument in support thereof. Upon receiving a motion, the Commission shall either: (1) Provisionally accept the motion, or (2) reject the motion. Should the Commission on its own initiative believe that such a modification may be in order, it shall publish notice to that effect, which notice shall be treated as a provisionally accepted motion under this subsection. Upon provisional acceptance, notice thereof shall be published in the Federal Register. The motion and the notice shall be served on each former party to the section 337 proceeding. Within 30 days after the service of such motion, any party served may file an answer thereto. The Commission may hold a public hearing and afford interested persons the opportunity to appear and be heard. After consideration of the motion, any responses thereto, or any information placed on the record at a public hearing or otherwise, the Commission shall take such action as it deems appropriate. Any final Commission action will, if not modified or revoked, expire by terms stated in the action.

Section 211.57 Temporary emergency action.

Whenever the Commission determines, pending a formal enforcement proceeding under section 211.56(b), that without immediate action a violation of a cease and desist order will occur and that subsequent action by the Commission would not adequately repair the harm caused by such violation, the Commission may immediately

and without hearing or notice modify or revoke a cease and desist order and, if it is revoked, replace the cease and desist order with an appropriate exclusion order. Prior to taking any action under this section the Commission shall consider the effect of such action upon the public health and welfare, competitive conditions in the U.S. economy, the production of like or directly competitive articles in the United States, and U.S. consumers. Any order issued under this section shall become effective and final as provided in section 210.56 for purposes of setting bond (if applicable), appeal, and Presidential review under section 337. The Commission shall, if it has not already done so, institute a formal enforcement proceeding under section 211.56(b) at the time of taking action under this section or as soon as possible thereafter, in order to give the alleged violator and other interested parties a full opportunity to present information and views regarding the continuation, modification or revocation of Commission action taken under this section.

Section 211.58 Notice of enforcement action to government agencies.

(a) *Consultation.*—The Commission may consult with or seek information from any government agency when taking any action under this subpart.

(b) *Notification of Treasury.*—The Commission shall notify the Secretary of the Treasury of any action under this subpart which results in a permanent or temporary exclusion of articles from entry or the revocation of an order to such effect.

By order of the Commission.

Issued: April 2, 1980.

KENNETH R. MASON,
Secretary.

In the Matter of CERTAIN HEADBOXES AND PAPERMAKING MACHINE FORMING SECTIONS FOR THE CONTINUOUS PRODUCTION OF PAPER, AND COMPONENTS THEREOF	Investigation No. 337–TA–82

Notice of Investigation

Notice is hereby given that a complaint was filed with the U.S. International Trade Commission on February 21, 1980, under section 337 of the Tariff Act of 1930 (19 U.S.C. 1337), on behalf of Beloit Corp., 1 St. Lawrence Avenue, Beloit, Wis. 53511, alleging that unfair methods of competition and unfair acts exist in the importation into the United States of certain headboxes and papermaking machine

forming sections for the continuous production of paper, and components thereof, or in their sale, because (1) such headboxes and papermaking machine forming sections are allegedly covered by claims 1, 12, 14, 15, 16, and 22 of U.S. Letters Patent RE 28,269, claims 1, 2, 4, 5, and 6 of U.S. Letters Patent No. 3,923,593, and claims 1–5 and 7–14 of U.S. Letters Patent No. 3,876,498, and (2) such components allegedly contribute to and induce infringement of the aforementioned claims of the patents. The complaint alleges that the effect or tendency of the unfair methods of competition and unfair acts is to destroy or substantially injure an industry, efficiently and economically operated, in the United States.

Complainant requests that, after a full investigation has been conducted, exclusion of the imports in question and such other and further relief as the Commission deems appropriate be ordered by the Commission. The complainant has also requested that a temporary exclusion order be issued during the pendency of the investigation.

Having considered the complaint, the Commission, on March 20, 1980, ORDERED THAT—

(1) Pursuant to subsection (b) of section 337 of the Tariff Act of 1930 (19 U.S.C. 1337), an investigation be instituted to determine whether there is reason to believe there is a violation and whether there is a violation of subsection (a) of this section in the unauthorized importation of certain headboxes and papermaking machine forming sections for the continuous production of paper, and components thereof, into the United States, or in their sale, because (1) such headboxes and papermaking machine forming sections are allegedly covered by claims 1, 12, 14, 15, 16, and 22 of U.S. Letters Patent RE 28,269, claims 1, 2, 4, 5, and 6 of U.S. Letters Patent No. 3,923,593, and claims 1–5 and 7–14 of U.S. Letters Patent No. 3,876,498, and (2) such components allegedly contribute to and induce infringement of the aforementioned claims of the patents, the effect or tendency of which is to destroy or substantially injure an industry, efficiently and economically operated, in the United States;

(2) For the purpose of the investigation so instituted, the following are hereby named as parties upon which this notice of investigation shall be served:

(a) The complainant is—

Beloit Corp.
1 St. Lawrence Avenue
Beloit, Wis. 53511

(b) The respondents are the following companies alleged to be engaged in the unauthorized importation of certain headboxes and papermaking machine forming sections for the continuous production

of paper, and components thereof, into the United States, or in their sale, and are parties upon which the complaint is to be served:

Aktiebolaget Karlstads
Mekaniska Werkstad
Fack S–651 01, Karlstad
Sweden
Scott Paper Co.
Scott Plaza
Philadelphia, Pa. 19113
Crown Zellerbach
1 Bush Street
San Francisco, Calif. 94119
KMW Johnson, Inc.
5821 Park Road
Charlotte, N.C.
28209
Procter & Gamble Co.
6100 Center Hill Road
Cincinnati, Ohio 45224
Fort Howard Paper Co.
Muskogee, Okla. 74401

(c) Louis S. Mastriani, U.S. International Trade Commission, 701 E Street NW., Washington D.C. 20436, is hereby named Commission investigative attorney, a party to this investigation; and

(3) For the investigation so instituted, Chief Administrative Law Judge Donald K. Duvall, U.S. International Trade Commission, 701 E Street NW., Washington, D.C. 20436, shall designate the presiding officer.

Procter & Gamble Co., Scott Paper Co., Crown Zellerbach, and Fort Howard Paper Co., have been named as party respondents in paragraph (2)(b) above on the basis of the informal investigation by the Commission investigative attorney. That informal investigation revealed that the articles in question are imported as component parts and thereafter are assembled at the facilities of these companies, thereby forming the basis of the allegation in the complaint of direct infringement.

Responses must be submitted by the named respondents in accordance with section 210.21 of the Commission's Rules of Practice and Procedure (19 CFR 210.21). Pursuant to sections 201.16(d) and 210.21(a) of the rules, such responses will be considered by the Commission if received not later than 20 days after the date of service of the complaint. Extensions of time for submitting a response will not be granted unless good and sufficient cause therefor is shown.

Failure of a respondent to file a timely response to each allegation in the complaint and in this notice may be deemed to constitute a waiver of the right to appear and contest the allegations of the complaint and this notice, and to authorize the presiding officer and the Commission, without further notice to the respondent, to find the facts to be as alleged in the complaint and this notice and to enter both a recommended determination and a final determination containing such findings.

The complaint, except for confidential information contained herein, is available for inspection by interested persons at the Office

of the Secretary, U.S. International Trade Commission, 701 E Street NW., Washington, D.C. 20436, and in the Commission's New York City office, 6 World Trade Center, New York, N.Y. 10048.

By order of the Commission.

Issued: April 1, 1980.

KENNETH R. MASON,
Secretary.

Index

U.S. Customs Service

T.D. No

Treasury decisions:
- Foreign currencies:
  - Daily certified rates; March 17–21, 1980 80–97
  - Rates which varied from quarterly rate; week of March 17–21, 1980 80–98

Customs Court

American manufacturer's action, C.R.D. 80–3
American manufacturers' action, C.D. 4848
Antidumping:
- Negative injury determination, C.D. 4848
- Summary judgment, motion for, C.D. 4848, C.R.D. 80–3

"Articles exported to the United States before 12:01 A.M. * * * September 21, 1976 * * *"; construction, C.D. 4849
Battery service tools, C.D. 4848
Construction:
- Antidumping Act of 1921, as amended; C.R.D. 80–3
  - Sec. 201, C.D. 4848
  - Sec. 202(a), C.D. 4848
- "Articles exported to the United States before 12:01 A.M. * * * September 21, 1976 * * *", C.D. 4849
- Customs Regulations:
  - Sec. 153.39 (1975), C.D. 4848
  - Sec. 153.42, C.D. 4848
- Date of exportation, C.D. 4849
- Presidential Proclamation:
  - No. 4463, C.D. 4849
  - No. 4466, C.D. 4849
- Tariff Act of 1930, as amended, sec. 516, C.D. 4848
- Tariff Schedules of the United States, item 155.20, C.D. 4849
- U.S. Code:
  - Title 19:
    - Sec. 160, C.D. 4848
    - Secs. 160, *et seq.*, C.D. 4848, C.R.D. 80–3
    - Sec. 160(a), C.R.D. 80–3
    - Sec. 161(a), C.D. 4848
    - Sec. 173, C.D. 4848
    - Sec. 1516, C.D. 4848, C.R.D. 80–3
    - Sec. 1516(a), C.D. 4848, C.R.D. 80–3

Sec. 1516(e), C.D. 4848, C.R.D. 80-3
Sec. 1516(f), C.D. 4848, C.R.D. 80-3
Title 28:
Sec. 1582(b), C.D. 4848, C.R.D. 80-3
Sec. 2632(a), C.D. 4848, C.R.D. 80-3
U.S. Constitution, Article 1:
Sec. 9, cl. 5, C.D. 4849
Sec. 10, cl. 2, C.D. 4849
Cross-motions for summary judgment; C.D. 4848, C.R.D. 80-3
Date of exportation to the United States, C.D. 4849
Customs Court; injury determination, review of, C.D. 4848
Customs regulation, force and effect of, C.D. 4848
Date of exportation:
Construction, C.D. 4849
To the United States; cross-motions for summary judgment, C.D. 4849
Definition; exportation, C.D. 4849
Exportation, date of, C.D. 4849
Hand tools, non-powered, C.D. 4848
Injury determination:
Review:
Of; Customs Court, C.D. 4848
Scope of, C.D. 4848
Standard of, C.D. 4848
Scope of review, C.D. 4848, C.R.D. 80-3
Standard of review, C.D. 4848
Judicial review:
Negative injury determination, C.R.D. 80-3
Setting aside ruling of administrative agency, C.D. 4848
Tariff Commission actions and proceedings, C.D. 4848
Less than fair value:
Determination; Treasury Department amendment, C.D. 4848
Negative injury determination, C.R.D. 80-3
Motion for summary judgment, C.D.'s 4848, 4849, C.R.D. 80-3
Negative injury determination:
Antidumping, C.D. 4848
Judicial review, C.R.D. 80-3
Less than fair value, C.R.D. 80-3
Review, judicial, C.R.D. 80-3
United States International Trade Commission, C.R.D. 80-3
Non-powered hand tools, C.D. 4848
Proceedings, stay of, C.R.D. 80-3
Review:
Judicial; negative injury determination, C.R.D 80-3
Of injury determination; substantial evidence standard, C.D. 4848
Scope of; injury determination, C.D. 4848
Standard of; injury determination, C.D. 4848
Scope of review; injury determination, C.D. 4848, C.R.D. 80-3
Setting aside ruling of administrative agency; judicial review, C.D. 4848
Standard of review; injury determination, C.D. 4848
Stay of proceedings; American manufacturer's action, C.R.D. 80-3
Substantial evidence standard; review of injury determination, C.D. 4848
Sugar cargo, C.D. 4849

Summary judgment, cross-motions for, C.D.'s 4848, 4849, C.R.D. 80-3
Summary judgment, motion for; antidumping, C.D. 4848, C.R.D. 80-3
Tantalum electrolytic fixed capacitors, C.R.D. 80-3
Tariff Commission actions and proceedings; judicial review, C.D. 4848
Treasury Department amendment; less than fair value determination, C.D. 4848
United States International Trade Commission; negative injury determination, C.R.D. 80-3
Valuation decision:
Construction:
Tariff Act of 1930, as amended:
Sec. 402(b), C.D. 4850
Sec. 402(f), C.D. 4850
Sec. 402(f)(3), C.D. 4850
Issues:
Export value—Where components of temperature control systems which were used in the cabins of DC-9 aircraft were appraised on the basis of export value as defined in section 402(b) of the Tariff Act of 1930, as amended by the Customs Simplification Act of 1956, at the prices paid by the airline, the court held the proper dutiable values were the prices paid by the original equipment manufacturer. *J. E. Bernard & Co.*, Inc., C.D. 4850
Export value—bargaining—A negotiated price on the basis of a competitive bid is not a price arrived at by "bargaining" which would eliminate its use in determining export value. *J. E. Bernard & Co., Inc.*, C.D. 4850
Export value—purchasers for industrial use—Where parties stipulated that if the airlines did not purchase "for industrial use" under the definition contained in section 402(f)(3) of the Tariff Act of 1930, as amended, then the prices paid by the original equipment manufacturers were the proper dutiable values. *J. E. Bernard & Co., Inc.*, C.D. 4850
Merchandise; aircraft temperature control components, C.D. 4850
Value; export, C.D. 4850
Words and phrases:
For industrial use, C.D. 4850
Purchasers at wholesale, C.D. 4850
Purchasers for industrial use, C.D. 4850
Words and phrases:
Battery service tools, C.D. 4848
Exportation, C.D. 4849
Severance of goods, C.D. 4849

Jt 315-599 Item 950-D T1.11/3:14/18
APR 29 1980
C-350

Customs Bulletin

Regulations, Rulings, Decisions, and Notices concerning Customs and related matters

and Decisions

of the United States Court of Customs and Patent Appeals and the United States Customs Court

Vol. 14 APRIL 30, 1980 No. 18

9247

This issue contains

T.D. 80–99 through 80–103
ERRATUM
C.D. 4851 and 4852
Protest abstracts P80/47 through P80/53
Reap. abstracts R80/101
International Trade Commission Notice

THE DEPARTMENT OF THE TREASURY
U.S. Customs Service

NOTICE

The abstracts, rulings, and notices which are issued weekly by the U.S. Customs Service are subject to correction for typographical or other printing errors. Users may notify the U.S. Customs Service, Logistics Management Division, Washington, D.C. 20229, of any such errors in order that corrections may be made before the bound volumes are published.

For sale by the Superintendent of Documents, U.S. Government Printing Office, Washington, D.C. 20402. Price: $1.30 (single copy domestic); $1.65 (single copy foreign). Subscription price: $65.00 a year domestic; $81.25 a year foreign.

U.S. Customs Service

Treasury Decisions

(T.D. 80–99)

Customs-Approved Public Gager

Approval of public gager performing gaging under standards and procedures required by Customs

Notice is hereby given pursuant to the provisions of section 151.43 of the Customs Regulations (19 CFR 151.43) that the application of Independent Inspectors Corp., 107 Berwyn Street, Roselle Park, N.J. 07204, to gage imported petroleum and petroleum products in all Customs districts in accordance with the provisions of section 151.43 of the Customs Regulations is approved.

Dated: April 9, 1980.

SALVATORE E. CARAMAGNO,
Acting Director, Office of Regulations and Rulings.

(T.D. 80–100)

Cancellation with Prejudice of Customhouse Broker License 4912

DEPARTMENT OF THE TREASURY,
OFFICE OF THE COMMISSIONER OF CUSTOMS,
Washington, D.C.

Notice is hereby given that the Assistant Secretary of the Treasury on March 11, 1980, pursuant to section 641, Tariff Act of 1930, as amended (19 U.S.C. 1641), and section 111.51(b), Customs Regulations, as amended, canceled with prejudice individual customhouse broker's license No. 4912 issued to William G. Folds on March 31, 1974, for the Customs district of Buffalo, N.Y. The Assistant Secretary's decision is effective as of March 11, 1980.

Dated: April 7, 1980.

WILLIAM T. ARCHEY,
Commissioner of Customs.

[Published in the Federal Register, Apr. 16, 1980 (45 F.R. 25487)]

(T.D. 80-101)

Foreign Currencies—Daily Rates for Countries not on Quarterly List

Rates of exchange based on rates certified to the Secretary of the Treasury by the Federal Reserve Bank of New York for the Brazil cruziero, People's Republic of China yuan, Hong Kong dollar, Iran rial, Philippines peso, Singapore dollar, Thailand baht (tical) and Venezuela bolivar

The Federal Reserve Bank of New York, pursuant to section 522(c), Tariff Act of 1930, as amended (31 U.S.C. 372(c), has certified buying rates for the dates and foreign currencies shown below. The rates of exchange, based on these buying rates, are published for the information and use of Customs officers and others concerned pursuant to part 159, subpart C, Customs Regulations (19 CFR 159, subpart C).

Brazil cruzeiro:	
March 24–28, 1980	$0.0214
People's Republic of China yuan:	
March 24–27, 1980	$0.633633
March 28, 1980	.631074
Hong Kong dollar:	
March 24, 1980	$0.197161
March 25, 1980	.197355
March 26, 1980	.197044
March 27, 1980	.196967
March 28, 1980	.197044
Iran rial:	
March 24–28, 1980	Not available
Philippines peso:	
March 24–27, 1980	$0.1350
March 28, 1980	.1345
Singapore dollar:	
March 24, 1980	$0.446927
March 25, 1980	.446429
March 26, 1980	.446229
March 27, 1980	.444444
March 28, 1980	.442968
Thailand Baht (tical):	
March 24–27, 1980	$0.0479
March 28, 1980	.0489

Venezuela bolivar:

March 24–28, 1980	$0.2329

(LIQ-3-TRODE)

Dated: April 9, 1980.

G. SCOTT SHREVE,
(For Chester R. Krayton,
Director, Duty Assessment Division).

(T.D. 80-102)

Foreign Currencies—Variances From Quarterly Rate

Rates of exchange based upon rates certified to the Secretary of the Treasury by the Federal Reserve Bank of New York

The following rates of exchange are based upon rates certified to the Secretary of the Treasury by the Federal Reserve Bank of New York, pursuant to section 522(c), Tariff Act of 1930, as amended (31 U.S.C. 372(c)), and reflect variances of 5 per centum or more from the quarterly rate published in T.D. 80-28 for the following countries. Therefore, as to entries covering merchandise exported on the dates listed, whenever it is necessary for Customs purposes to convert such currency into currency of the United States, conversion shall be at the following rates:

Austria schilling:	
March 24, 1980	$0.073910
March 25, 1980	.073801
March 26, 1980	.073746
March 27, 1980	.072767
March 28, 1980	.072202
March 31, 1980	.071788
Belgium franc:	
March 24, 1980	$0.032787
March 25, 1980	.032733
March 26, 1980	.032776
March 27, 1980	.032441
March 28, 1980	.032310
March 31, 1980	.031980
Denmark krone:	
March 24, 1980	$0.169549
March 25, 1980	.168634
March 26, 1980	.169176
March 27, 1980	.167434
March 28, 1980	.167140
March 31, 1980	.165153

Finland markka:	
March 24, 1980	$0. 255037
France franc:	
March 24, 1980	$0. 227946
March 25, 1980	. 227324
March 26, 1980	. 227531
March 27, 1980	. 225938
March 28, 1980	. 224492
March 31, 1980	. 221656
Germany deutsche mark:	
March 24, 1980	$0. 529661
March 25, 1980	. 527037
March 26, 1980	. 527148
March 27, 1980	. 520969
March 28, 1980	. 517598
March 31, 1980	. 512426
Ireland pound:	
March 24, 1980	$1. 9702
March 25–26, 1980	1. 9745
March 27, 1980	1. 9540
March 28, 1980	1. 9505
March 31, 1980	1. 9300
Italy lira:	
March 24, 1980	$0. 001136
March 25, 1980	. 001134
March 26, 1980	. 001137
March 27, 1980	. 001127
March 28, 1980	. 001119
March 31, 1980	. 001111
Netherlands guilder:	
March 24, 1980	$0. 483442
March 25, 1980	. 481626
March 26, 1980	. 482276
March 27, 1980	. 476531
March 28, 1980	. 473709
March 31, 1980	. 466200
Norway krone:	
March 31, 1980	$0. 192976
Spain peseta:	
March 24, 1980	$0. 014178
March 25, 1980	. 014130
March 26, 1980	. 014124
March 27, 1980	. 013957
March 28, 1980	. 013904
March 31, 1980	. 013801

Sweden krona:	
March 24, 1980	$0.226963
March 25, 1980	.227195
March 26, 1980	.227376
March 27, 1980	.224568
March 28, 1980	.224618
March 31, 1980	.223214
Switzerland franc:	
March 24, 1980	$0.558971
March 25, 1980	.556174
March 26, 1980	.557258
March 27, 1980	.546896
March 28, 1980	.545703
March 31, 1980	.540103

(LIQ-3-TRODE)

Dated: April 9, 1980.

G. SCOTT SHREVE
(For Chester R. Krayton,
Director, Duty Assessment Division).

(T.D. 80-103)

Foreign Currencies—Quarterly List of Rates of Exchange

List of buying rates in U.S. dollars based upon rates certified to the Secretary of the Treasury by the Federal Reserve Bank of New York

The table below lists rates of exchange, in U.S. dollars for certain foreign currencies, which are based upon rates certified to the Secretary of the Treasury by the Federal Reserve Bank of New York under the provisions of section 522(c), Tariff Act of 1930, as amended (31 U.S.C. 372(c)), for the information and use of Customs officers and others concerned pursuant to part 159, subpart C, Customs Regulations (19 CFR 159, subpart C).

QUARTER BEGINNING APRIL 1, 1980, TO JUNE 30, 1980

Country	Name of currency	U.S. dollars
Australia	Dollar	$1.0775
Austria	Schilling	.070671
Belgium	Franc	.031696
Canada	Dollar	.835282
Denmark	Krone	.163934
Finland	Markka	.254323
France	Franc	.221239
Germany	Deutsche Mark	.509814
India	Rupee	.1205
Ireland	Pound	1.9030
Italy	Lira	.001098
Japan	Yen	.003927
Malaysia	Dollar	.431593
Mexico	Peso	.043725
Netherlands	Guilder	.466092
New Zealand	Dollar	.9340
Norway	Krone	.192049
Portugal	Escudo	.019305
Republic of South Africa	Rand	1.2342
Spain	Peseta	.013587
Sri-Lanka	Rupee	.0617
Sweden	Krona	.222321
Switzerland	Franc	.536481
United Kingdom	Pound	2.1515

(LIQ-3-TRODE)

Dated: April 9, 1980.

G. SCOTT SHREVE
(For Chester R. Krayton,
Director, Duty Assessment Division).

ERRATUM

In CUSTOMS BULLETIN, vol. 14, No. 5, dated January 30, 1980, in T.D. 80-23-G, the following Treasury decisions should be omitted from those listed as being revoked: T.D. 54395-A, as amended by 54446-A, 55035-B, 55844-P, and 56549-B.

Decisions of the United States Customs Court

United States Customs Court

One Federal Plaza

New York, N.Y. 10007

Chief Judge

Edward D. Re

Judges

Paul P. Rao
Morgan Ford
Scovel Richardson
Frederick Landis
James L. Watson
Herbert N. Maletz
Bernard Newman
Nils A. Boe

Senior Judge

Samuel M. Rosenstein

Clerk

Joseph E. Lombardi

Customs Decisions

(C.D. 4851)

G. M. RUBBER INDUSTRIES, INC., PLAINTIFF *v.* UNITED STATES, DEFENDANT

Footwear

Court No. 75-5-01099

Articles invoiced as "rubber overshoes" held properly classified by Customs under item 700.52 as footwear of rubber or plastics and not, as claimed by the plaintiff-importer, as other articles not specially provided for, of rubber or plastics.

[Judgment for defendant.]

(Decided March 31, 1980)

Siegel, Mandell & Davidson (*Herbert T. Posner* at the trial and on the briefs) for the plaintiff.

315-593 O - 80 - 2

Alice Daniel, Assistant Attorney General; *Joseph I. Liebman*, Attorney in Charge, Field Office for Customs Litigation (*Sidney* G. *Weiss* at the trial and on the brief), for the defendant.

MALETZ, Judge: This action involves the dutiable status of merchandise, described on the invoices as rubber overshoes, which was imported from Brazil by plaintiff and entered at the port of San Juan, Puerto Rico during the period March 1973–January 1974. The merchandise was classified by Customs under item 700.52 of the Tariff Schedules of the United States (TSUS) as footwear of rubber or plastics, and assessed duty at the rate of 25 percent ad valorem. Plaintiff challenges this classification and claims the importations are properly classifiable under item 774.60 as other articles not specially provided for, of rubber or plastics, dutiable at the rate of 8.5 percent ad valorem.

The pertinent provisions of TSUS read as follows:

Classified under:

Schedule 7, part 1, subpart A

Footwear (whether or not described elsewhere in this subpart) which is over 50 percent by weight of rubber or plastics or over 50 percent by weight of fibers and rubber or plastics with at least 10 percent by weight being rubber or plastics:

Hunting boots, galoshes, rainwear, and other footwear designed to be worn over, or in lieu of, other footwear as a protection against water, oil, grease, or chemicals or cold or inclement weather, all the foregoing having soles and uppers of which over 90 percent of the exterior surface is rubber or plastics (except footwear with uppers of nonmolded construction formed by sewing the parts thereof together and having exposed on the outer surface a substantial portion of functional stitching):

* * * * * * *

700.52	Footwear (except footwear provided for in item 700.51), the uppers of which do not extend above the ankle, designed for use without closures, whether or not supported or lined	25% ad val.

Claimed under:

Schedule 7, part 12, subpart D

Articles not specially provided for, of rubber or plastics:

* * * * * * *

774.60 Other ---------- 8.5% ad val.

General interpretative rules:

10(h) unless the context requires otherwise, a tariff description for an article covers such article, whether assembled or not assembled, and whether finished or not finished;

Plaintiff claims that the imported merchandise is neither finished nor unfinished footwear. Rather, it contends that the importations are parts of footwear and therefore cannot be classified under item 700.52 since that item does not contain a "parts" provision. For that reason, plaintiff concludes that the imported merchandise is properly classifiable under item 774.60 as other articles not specially provided for, of rubber or plastics.

The record in the case includes the testimony of three witnesses for the plaintiff and two witnesses for the defendant.[1] The record discloses the following:

The importations—which as previously noted were invoiced as rubber overshoes—had two types of soles, i.e., a grooved sole and a smooth sole. After the articles were imported into Puerto Rico, plaintiff added an "ice gripper sole coating" to the soles which consisted of a rubber adhesive coating combined with an abrasive alumina grit. The product with the grit sole was known as the "Ice Gripper" and was specifically designed for use on slippery surfaces such as ice and snow.

Plaintiff never sold the imported overshoes without the addition of the grit to the soles. The reason, according to plaintiff's witnesses, was that in their condition as imported the overshoes were unsafe for use on wet or icy surfaces because of the smooth or grooved surface of their soles. Further, laboratory tests showed that on a wet concrete surface the imported overshoes had very little slip resistance or traction as compared to similar articles which had a raised tread pattern. Based on these tests, the person who conducted them testified that the imported overshoes were unsafe and dangerous to the wearer on ice and snow in that the shoes supplied very poor footing with consequent

---

[1] The witnesses for plaintiff were: (1) Jack Rubin who was secretary-treasurer of plaintiff from 1968–77; (2) Felix Konstandt, the president and technical director of National Testing Laboratories, Inc., a commercial testing laboratory engaged in the testing and evaluation of consumer products; and Alvin Chanon, former vice president and later president of plaintiff during 1968–77.

The witnesses for defendant were: (1) Frank M. LeCompte, vice president in charge of engineering at the Tingley Rubber Corp., a manufacturer of rubber footwear; and (2) William McCollum, executive vice president in charge of marketing, advertising, and sales at the Tingley corporation.

risk of injury. In that witness' view, it was analogous to using a car tire without tread. In addition, the witness estimated that with the grit sole added, the overshoe provided 100 percent greater traction than in its condition as imported. However, the witness agreed that in its condition as imported, the overshoe provided greater traction than a leather sole shoe.

Defendant's witnesses testified that in their opinion the imported merchandise has utility as a rubber overshoe because it provides protection from water and contaminants and is therefore marketable in the United States. More specifically, these witnesses stated that the imported overshoes are marketable for use in animal husbandry and atomic energy plants. In this connection, they indicated that farmers who are engaged in animal husbandry, where it is important not to track contaminants from one bin to another, use overshoes of the type imported by plaintiff as a protection against such contaminants. Further, defendant's witnesses stated that rubber boots with treadless soles are used on contamination areas of atomic energy plants to protect the wearer from radiation dust and pointed out that some 19 years ago, their company had produced such a treadless rubber boot. They conceded, however, that at present no company produces an overshoe without a tread but indicated that their company has a standing offer from a major company in the industry to produce that type of boot for use in atomic energy facilities. The witnesses agreed that tread design on a rubber overshoe can greatly enhance its slip resistance. Finally, they stated that their company had never manufactured nor sold an article of merchandise with a sole identical to the soles found on the imported merchandise.

With respect to the cost of the grit, a witness for plaintiff testified that the imported merchandise cost plaintiff 80 cents per pair. He stated that the labor cost in Puerto Rico for adding the grit sole was $1.50 per pair and that the cost of the adhesive and grit was about 55 cents per pair. On the other hand, a witness for the defendant expressed the opinion that the grit sole could be applied for approximately 25 percent of the cost of the overshoe.

In this setting, it must be concluded that the merchandise at issue is of a class or kind designed to be worn as a protection from water or chemicals and thus is finished footwear. For the record is clear that rubber overshoes of the type involved here are of a class or kind which are designed to be worn, and in fact are worn, in animal husbandry and atomic energy plants to protect the wearer against these elements. This being the case, the imported merchandise falls within the provisions of item 700.52 which covers "footwear designed to be worn over, or in lieu of, other footwear as a protection against water, * * * or chemicals * * *."

In addition, it was plaintiff's burden to prove that the overshoes in question are not of a class or kind designed to be worn as a protection from these elements. And in this respect, the plaintiff has not rebutted the presumption of correctness that the appropriate Customs officer found every fact necessary to sustain classification under item 700.52. *United States* v. *New York Merchandise Co.*, 58 CCPA 53, C.A.D. 1004, 435 F. 2d 1315 (1970). Thus, even accepting at face value the testimony of plaintiff's witnesses and plaintiff's argument that the overshoes are unsafe for use on ice or snow, this does not establish that they are of a class or kind unsuitable for use in animal husbandry and atomic energy installations for protection against water or chemicals. Indeed, the record is to the contrary. And it is not dispositive that the soles of the imported overshoes are not identical to the soles used in animal husbandry and atomic energy plants.

What is more, even should it be assumed arguendo that the imported merchandise is not finished footwear, it still would be classifiable under item 700.52 as unfinished footwear. As previously indicated, general interpretative rule 10(h) provides that a tariff description for an article covers such an article whether it is finished or unfinished. And to constitute an unfinished article within the meaning of this rule, the article must be substantially complete. See, e.g., *Authentic Furniture Products, Inc.* v. *United States*, 61 CCPA 5, C.A.D. 1109, 486 F. 2d 1062 (1973); *Daisy-Heddon* v. *United States*, 66 CCPA —, C.A.D. 1228, 600 F. 2d 799 (1979). In *Daisy-Heddon*, the court indicated that in determining whether an article is substantially complete the following factors can be relevant: (1) Comparison of the number of omitted parts with the number of included parts; (2) comparison of the time and effort required to complete the article with the time and effort required to place it in its imported condition; (3) comparison of the cost of the included parts with that of the omitted parts; (4) the significance of the omitted parts to the overall functioning of the completed article; and, (5) trade customs, i.e., does the trade recognize the importation as an unfinished article or as merely a part of that article.

Considering the first of these factors, i.e., comparison of omitted and nonomitted parts, the merchandise in the present case can be and is used as protective footwear in animal husbandry and atomic installations. The addition of the grit sole makes the product suitable for use on ice or snow and hence merely changes its market use. Aside from this, there is considerable doubt whether this factor is even applicable here since the merchandise is imported in the form of a rubber overshoe and the addition of the grit sole would seem properly describable as further processing rather than the addition of a part.

With respect to the second factor, i.e., a comparison of the time and effort required to complete the article with the time and effort required

to place it in an imported condition, no evidence was presented as to the time and effort required in the manufacturing process either in Brazil or Puerto Rico.

Turning now to the third factor, namely a comparison of the cost of the included parts with that of the omitted parts, it must be concluded that the evidence presented by the parties was insufficient to make an adequate comparison of the cost of the overshoes with the grit sole and the cost of the overshoes without the grit sole. It is true that a witness for plaintiff testified that the cost of the overshoes with the grit sole was $2.85 per pair, while the cost of the overshoes without the grit sole was 80 cents per pair. However, little probative weight can be given to this testimony since there is a total absence of any documentary or other supporting data Beyond that, a witness for defendant expressed the opinion that the grit sole could be applied for approximately 25 percent of the cost of the overshoe.

The fourth factor is the significance of the omitted parts to the over all functioning of the completed article. Here, as pointed out above, the addition of the grit sole merely changes the market use of the product.

With regard to the last factor as to whether the trade recognizes the importation as an unfinished article or as a part of that article, it is to be noted that the articles are invoiced as "rubber overshoes." Persuasive too is the testimony of the defendant's witnesses that the merchandise, as imported, is marketable as, and meets the requirements of, rubber overshoes.

In sum, considering the factors set out in *Daisy-Heddon*, the conclusion is that the merchandise as imported, if not finished footwear, is at the very least unfinished footwear.

For the foregoing reasons, the classification of the importations by Customs under item 700.52 is affirmed and the action is dismissed.

(C.D. 4852)

RIEKES CRISA CORP., PLAINTIFF *v.* UNITED STATES, DEFENDANT

Glass Candle Jars

Consolidated Court No. 65/19461

Glass jars imported from Mexico were classified by Customs officials as other glassware household articles, not specially provided for, under item 546.51 or 546.52 of the Tariff Schedules of the United States depending upon the date of entry, and assessed with duty at the rate of 50 per centum ad valorem. The importer contended that the merchandise should have been classified as other glass containers chiefly used for the packing, transporting, or marketing of merchan-

dise under item 545.27 of the tariff schedules, and assessed with duty at various rates depending upon the date of entry. In the alternative, plaintiff claimed that the merchandise was properly classifiable as other articles of glass, not specially provided for, under item 548.05 of the tariff schedules, and dutiable at various rates depending upon the date of entry. The court found that the imported glass jars were specially designed and further processed for use as an integral component of a new article of commerce, a candle or candle lamp for the institutional trade and, therefore, were incorrectly classified by Customs officials as other glassware household articles. Plaintiff failed to sustain its primary claim of classification of the glass jars within item 545.27. Hence, the articles were properly classifiable under plaintiff's alternative claim as other articles of glass, not specially provided for, within item 548.05.

CHIEF USE—HOUSEHOLD ARTICLES

The record conclusively establishes that the imported glass jars are used in places other than the household, namely, the institutional trade, such as restaurants, hotels, and other public places. Therefore, plaintiff has sustained its burden of establishing that the imported articles do not belong to a "class or kind" of merchandise chiefly used in the household.

CHIEF USE—CONTAINERS FOR THE PACKING, TRANSPORTING, OR MARKETING OF MERCHANDISE

The "class or kind" of containers intended by Congress to be embraced by the provisions of item 545.27 are the usual, ordinary, and commonly used glass containers for various commodities or merchandise. The imported glass jars which were designed to be used, and were used, as an integral part of a new article of commerce, a candle or candle lamp, are not encompassed by that provision.

[Judgment for plaintiff.]

(Decided April 3, 1980)

Stein, Shostak, Shostak & O'Hara, Inc. (*Majorie M. Shostak* at the trial and on the briefs) for the plaintiff.

Alice Daniel, Assistant Attorney General: *David M. Cohen*, Director, Customs Litigation Branch (*Edmund F. Schmidt* and *Bernard Babb* at the trial; *Edmund F. Schmidt* on the brief), for the defendant.

RE, Chief Judge: The question presented in this case pertains to the proper classification, for Customs duty purposes, of glass jars imported from Mexico. The glass jars are of three different styles known as the "Tiffany," the "Monterrey" or "Hurricane," and the "Parisian" or teardrop.

Ten of the fifteen consolidated protests include "Tiffany," "Monterrey" or "Hurricane," and "Parisian" or teardrop glass jars which were classified by the Customs officials under item 546.51 or 546.52 of the Tariff Schedules of the United States (TSUS) depending upon

the date of entry, as other glassware household articles, not specially provided for. Consequently, they were assessed with duty at the rate of 50 per centum ad valorem.

The remaining five protests include only "Parisian" or teardrop jars which were classified under item 548.05, TSUS, as other articles of glass, not specially provided for. Hence, they were assessed with duty at the rate of 25, 22, or 20 per centum ad valorem depending upon the date of entry. At the commencement of trial, the defendant asserted that these "Parisian" or teardrop jars were erroneously classified under item 548.05, TSUS, and that the proper classification should be under item 546.51 or 546.52, TSUS, at the rate of 50 per centum ad valorem.

Plaintiff's primary claim is that all of the imported glass jars are properly classifiable as other containers of glass chiefly used for the packing, transporting, or marketing of merchandise, holding over 1 pint, under the provisions of item 545.27, TSUS. Hence, all three styles of the glass jars should properly be assessed with duty at the rate of 0.4, 0.35, or 0.3 cent per pound depending upon the date of entry.

In the alternative, plaintiff contends that if its primary claim is not sustained, the "Tiffany," the "Monterrey" or "Hurricane," and the "Parisian" or teardrop jars of the 10 protests are properly classifiable under item 548.05, TSUS, as other articles of glass, not specially provided for, dutiable at the rate of 25, 22, or 20 per centum ad valorem depending upon the date of entry.

Plaintiff makes no alternative claim as to those "Parisian" or teardrop jars of the remaining five protests since, as indicated, they were classified by the Customs officials under item 548.05, TSUS.

The pertinent statutory provisions are as follows:

Classified by Customs officials under:

TSUS:

> "Articles chiefly used in the household or elsewhere for preparing, serving, or storing food or beverages, or food or beverage ingredients; smokers' articles, *household articles*, and art and ornamental articles, all the foregoing not specially provided for [italic added]:
>
> * * * * * * *
>
> Other glassware (entered or withdrawn from warehouse before January 1, 1968):
>
> Valued not over $1 each:
>
> * * * * * * *

546.51 Other ..... 50% ad val."

TSUS as modified by T.D. 68-9:

"Other glassware (entered or withdrawn from warehouse after January 1, 1968):

* * * * * * *

Other:

546.52 Valued not over $0.30 each . 50% ad val."

Claimed by plaintiff under:

TSUS or TSUS as modified by T.D. 68-9:

545.27 "*Containers* (except ampoules) *chiefly used for the packing, transporting, or marketing of merchandise*, and containers chiefly used for home canning and preserving, all the foregoing, of glass, with or without their closures and whether or not coated with plastics materials [italic added]:

* * * * * * *

Other:

* * * * * * *

545.27 Holding over 1 pint ..... 0.4¢ per lb [before 1-1-68]
0.35¢ per lb. [1968]
0.3¢ per lb. [1969]"

Alternatively claimed by plaintiff under:

TSUS or TSUS as modified by T.D. 68-9:

"Articles not specially provided for, of glass:

* * * * * * *

548.05 Other ..... 25% ad val. [before 1-1-68]
22% ad val. [1968]
20% ad val. [1969]"

Against this statutory background, the question presented is whether the imported glass jars are other glassware household articles, as classified; other glass containers chiefly used for the packing, transporting, or marketing of merchandise, plaintiff's primary claim; or other articles of glass, not specially provided for, as alternatively claimed.

On the record before the court and for the reasons that follow, it is the determination of the court that all of the imported glass jars are properly classifiable as other "(a)rticles not specially provided for, of glass," under item 548.05. Hence, under the item of the tariff

315-599 O - 80 - 3

schedules, they are dutiable at the rate of 25, 22, or 20 per centum ad valorem depending upon the date of entry.

In addition to the official papers, the record consists of the testimony of 3 witnesses for the plaintiff, 16 exhibits, 10 introduced by the plaintiff and 6 by the defendant, and the record in the case of *Corrigan Dispatch Co., a/c S. Riekes and Sons et al.* v. *United States*, 264 F. Supp. 897, 58 Cust. Ct. 110, C.D. 2899 (1967).

The parties stipulated that the glass jars in their imported condition are clear, and that the color processing occurs after importation. It was also stipulated that all of the glass jars are closed at the bottom, and that, after importation and further manufacturing, the final product is used with stands.

Plaintiff's first witness, Mr. Max Riekes, is chairman of the board of S. Riekes & Sons and president of plaintiff Riekes Crisa Corp. Mr. Riekes, who has been associated with these companies for over 40 years, identified Riekes Crisa Corp., as an importer of glassware from Mexico, and stated that the companies which also deal in domestic merchandise are involved in the container business selling items such as serum bottles, beverage bottles, and pharmaceutical bottles. The witness, who has traveled throughout the United States supervising sales and attending trade shows, testified also that showrooms are maintained in San Francisco, Los Angeles, Denver, Dallas, Chicago, Atlanta, and New York, and that their merchandise is sold throughout the United States and Canada to manufacturers and to the gift trade. The Riekes visits the factory and is responsible for the purchase orders placed with his companies' Mexican manufacturer, Cristaleria, S.A.

Mr. Riekes also testified that he is familiar with the merchandise known as the "Parisian" or teardrop-style glass jar. He identified it as the merchandise at issue in the incorporated *Corrigan* case, and one of the styles of the three glass jars in the present action. In *Corrigan*, the "Parisian" jars were described as "clear cone-shaped containers of approximately 9 inches in length with the middle portion bulging out to a diameter of from 3 to 4 inches, narrowing at the top to an opening of about 2 inches and tapering to a point at the bottom."

The witness identified plaintiff's exhibit 1 as a representative sample of another style of glass jar imported in a clear condition known as the "Tiffany." Exhibit 2 was a drawing prepared by the Mexican manufacturer, Cristaleria, S.A., illustrating a third style clear glass jar known as the "Monterrey" or "Hurricane," and exhibit 3 was a red-colored sample of that article as it appears subsequent to the addition of color. He testified that all of the imported glass jars were sold by plaintiff exclusively to the Reed Candle Co. of San Antonio, and were not offered for sale to anyone else.

As imported, the merchandise was not marked with the name of the country of origin. The official papers reveal letters from the Reed Candle Co. to the appropriate Customs official requesting a waiver of the conventional marking requirements for these articles since they were to be further processed before sale. Some of the entries bear a rubber stamp, affixed by the Customs official at Laredo, which states that marking was waived under the Tariff Act of 1930, as amended. 19 U.S.C. 1304(a)(3)(G). On the statutory requirement that imported merchandise be marked with the English name of the country of origin, see *Globemaster, Inc.* v. *United States*, 340 F. Supp. 974, 68 Cust. Ct. 77, C.D. 4340 (1972).

Mr. Riekes testified that, as a result of his visits to the Reed Candle Co. plant, he has seen the glass jars processed and packed, knows how they are used and how they are advertised for sale. All of the glass jars have a capacity of over 1 pint and are designed to be used with a stand.

On cross-examination, Mr. Riekes testified that during the period 1964 through 1969 the plaintiff sold open-bottom, hurricane-style articles to the lamp industry. He explained that when done, the bottom is cut from the glass jar solely for the use of the lamp industry.

He identified defendant's illustrative exhibit A as a page from the catalog of the Indiana Glass Co. depicting "votive" candle lamps and testified that those articles are chiefly used in the home as nightlights for decorative and religious reasons. The witness was familiar with the articles illustrated on defendant's exhibit B, consisting of pages 30–34 of the Davidson Uphoff Co. catalog, which depicted various candelabras with hurricane glass heads. He stated that these articles do not have closed bottoms, are sold only to retail florists, and are used for "weddings, funerals—anything in a church."

A page from the brochure of the Blenko Glass Co., defendant's illustrative exhibit C, was identified by Mr. Riekes as depicting handmade, decorative, free-form glassware. He explained these differences between Blenko's articles and the "Tiffany" glass jars: Blenko's are made by hand, without specifications as to size and height, and are used for decorative purposes while plaintiff's "Tiffany" jars are manufactured to exact specifications as to size and height, and are designed to hold an exact amount of wax.

Defendant's exhibit D pertained to the old-style "Monterrey" candle jar which Mr. Riekes testified had been imported by plaintiff on only two occasions for sale to the Reed Candle Co. between 1964 and 1969.

On redirect examination, Mr. Riekes testified that he knew an article known as a "votive candle," and identified it as a small candle used in a "votive glass." Its use, he stated, was for decorative pur-

poses, heating, or "just to keep things warm." He also testified that this article is "sold * * * in all department stores."

On re-cross-examination, the witness identified style 1985, illustrated on defendant's exhibit A as being a votive candle lamp, and testified that because it is an expensive article, he has not seen it in use on restaurant tables except on special occasions.

Plaintiff's second witness, Mr. Peter Reed, the board chairman of the Reed Candle Co. of San Antonio, testified that he has been with that company for the past 26 years, and had previously served in other capacities, including production manager. During the period 1964 through 1969 he was in charge of manufacturing. His company manufactures and sells candles to large grocery chains, the institutional trade, and to churches.

The witness testified that he was familiar with the "Parisian" glass jars that were the subject of the *Corrigan* case, and has read the transcript of the testimony given in that case by his brother, Henry Reed. He affirmed that as to the use, handling, marketing, and distribution of that article, his testimony would be the same.

On the "Tiffany" and the "Monterrey" glass jars, exhibits 1 and 3 in this case, the witness testified that after receiving them from the plaintiff in a clear condition, his company converts them into candles, i.e., the glass jar is colored, the wick is inserted, and the jar is then filled with wax. His company never sold the glass jars in their imported condition, nor did it sell the wax without the jars, it being more economical for the users to reorder the entire article.

He identified plaintiff's collective exhibit 4 as advertising literature prepared by his company illustrating the "Monterrey" jars and the stands or holders with which they are sold or used. Plaintiff's collective exhibit 5 is advertising literature which illustrates the "Tiffany" jars, the stands or holders designed for them, and the manner in which they were decorated and used when filled with wax. He stated that the imported jars are made to Reed's specifications as to size and shape. In order to meet the requirements of the institutional trade, they are specially designed to burn properly and provide illumination for 140 hours.

On the sale of the imported merchandise, the witness testified that after his company received orders at its San Antonio office from the John Sexton Co., it was shipped directly to the end users, i.e., restaurants, hotels, and country clubs.

Exhibit 6 was offered in evidence as a carton used for shipping one dozen candles, and exhibit 7 as a sample of the "Parisian" style candle after it had been consumed. The witness affirmed that after the candle is burned, the article is not suitable for any other use and is thrown away.

On cross-examination, Mr. Reed testified that he is aware that there are candles which are used to refill glass cyclinders after the wax is consumed, and that defendant's exhibit E appeared to be a sample of a refill-type candle. From the testimony, however, it was clear that the imported jars are not refilled, but are thrown away after the candles are burned.

He stated that his company sells the "Parisian" and the "Monterrey" candle lamps in 12 colors, including a clear version. The "Tiffany" is made in 12 or 13 colors. He explained that the purpose of adding color to the glass is to give the customer a choice of color to match the decor of the restaurant. Mr. Reed did not agree that the "Parisian" is a candle lamp, and stated that it is a candle in a holder. He agreed that because of the design of the jar and the stand, the "Parisian" glass jar fits only in a Reed Co. candle stand.

Mr. Reed was aware of fishbowl-type glass jars with a net and poured-in wax, and testified that he had seen them used at parties, dances, and restaurants for illumination, and that they are institutional articles. He also stated that he had used a fishbowl-type candle in his yard, and had seen it used outside at garden parties.

On cross-examination, the witness testified that his company does manufacture and sell candles for household use and the giftware trade. The "Tiffany," the "Parisian," and the "Monterrey" candles could be used in the home, if they could be obtained from the John Sexton Co. He emphasized, however, that his company sells these articles exclusively to the John Sexton Co., which in turn sells only to institutional buyers.

Referring to defendant's exhibit F, a page from the brochure of the Miracle Candle Co. of Laredo, Tex., entitled "Candles for Wrought Iron," Mr. Reed testified that he was familiar with the glass jars illustrated therein, and that he had seen that company's products sold in supermarkets. He stated that these jars are usually religious-type articles, and can be used in the home.

On redirect examination, Mr. Reed testified that his company currently distributes candle jars to the institutional trade which are of a different style than the jars at issue, and identified exhibit 8 as a sample of one of those articles, and collective exhibit 9 as literature describing that type of article. Exhibit 10 was received in evidence as a sample of a consumed institutional candle holder similar to exhibit 8. Mr. Reed identified it as illustrative of the condition of the candle after it had been completely burned. He explained that after burning, the glass jar or "container" becomes soiled and unattractive and is, therefore, not reused.

Plaintiff's last witness, Mr. John C. Ryan, testified that he was formerly employed by the John Sexton Co. for over 40 years before

his retirement in 1976, having served as branch merchandise manager of the Dallas office from 1948 through 1976. His duties included responsibility for inventory, purchasing, quality control, pricing, distribution, and preparation of promotional material for the salesmen. He testified that the John Sexton Co. is a wholesale institutional grocer, and that it did not offer its candles and stands to any trade other than the institutional trade.

Mr. Ryan testified that he had read a transcript of the testimony in the *Corrigan* case given by Mr. Thomas H. Butler, the present general manager of the Dallas division of the John Sexton Co. He stated that, if asked the same questions as were asked of Mr. Butler as to the Reed Candle Co. institutional candles and stands, his testimony would be the same.

Mr. Ryan testified that the John Sexton Co. did not maintain any stock of Reed candles at its own facilities, and confirmed the testimony given by the previous witness as to the use and sale of its merchandise.

On cross-examination, the witness testified that during the period 1964 to 1969, the John Sexton Co. handled only Reed candles, and did not sell candles, i.e., the wax and wick, without the glass jars.

Upon questioning by the court on the meaning of the words "disposable candles," Mr. Ryan referred to the fact that the company received reorders for the candles, consisting of the glass jar, the wax and wick, rather than for the metal holders or stands.

In contesting the classification of the imported glass jars, plaintiff contends that, based on the uncontradicted testimony of record, together with the relevant testimony and exhibits in the incorporated case, it has clearly established that the imported merchandise is not within the class or kind chiefly used in the household.

In support of its position, plaintiff submits that, because of the doctrine of stare decisis, the decision of this court in *Corrigan* is dispositive of the present case. Notwithstanding that there are three styles of the articles in the case at bar and that only one of them was before the court in *Corrigan*, plaintiff contends that the factual situation is the same in both actions. It indicates that it is apparent from the testimony of the witnesses that the use of all of the imported glass jars is the same, and has not changed since the decision in *Corrigan*. In addition to their present testimony to that effect, plaintiff submits that the witnesses testified that if they were asked the same questions as in *Corrigan*, their answers would be the same.

In the *Corrigan* case, the question presented was whether the "Parisian" glass jars were properly classifiable as blown-glass household articles under the provisions of paragraph 218(f) of the Tariff Act of 1930, as modified. It was plaintiff's primary contention that the merchandise was properly classifiable as jars, wholly or in chief

value of glass, unfilled, suitable for use and of the character ordinarily employed for the holding or transportation of merchandise, under paragraph 217 of the act, as modified. In the alternative, plaintiff claimed the jars were properly dutiable as other illuminating articles, wholly or in chief value of glass, for use in connection with artificial illumination, under paragraph 218(c) of the act, as modified.

The court found that, according to the evidence, necessary and significant preliminary steps had to be taken before the containers were ready or commercially fit to hold and transport the merchandise they were exclusively designed to carry. Therefore, as imported, they did not come within the "suitable for use" condition required by the proviso in paragraph 217. Furthermore, the court found and held that the "Parisian" style glass jars were improperly classified as blown-glass household articles under the provisions of paragraph 218(f). On that aspect of the decision, plaintiff submits that the court reached a conclusion which is applicable to the present case. Plaintiff maintains that the following quotation from the *Corrigan* case indicates that it is controlling authority:

> There can be no doubt that the uncontradicted evidence presented in this case conclusively establishes that the imported items are used in places other than the household, namely, restaurants, hotels, and the like. The weight of the evidence further indicates that the factors of size and shape incorporated into the design of these articles render them dissimilar to glass containers offered to the gift and retail trades. On the basis of such evidence, we find the collector's classification to have been successfully rebutted and the presumption attending that classification overcome. 264 F. Supp. at 901.

Plaintiff urges that here, as in *Corrigan*, the testimony of record establishes that: (1) The articles in issue were specially designed according to Reed's specifications for use as candle containers; (2) they were imported exclusively for the Reed Candle Co.; and (3) after processing were chiefly used in the institutional trade. Moreover, plaintiff emphasizes that they were not offered to the gift or retail trade, and were used in places other than the household.

In view of the foregoing, plaintiff submits that it has successfully overcome the presumption of correctness which attaches to the classification of the glass jars under items 546.51 and 546.52, TSUS, as other glassware household articles, not specially provided for.

Defendant maintains that the record does not support a finding that the merchandise is not of a "class or kind" chiefly used in the household. It argues that the provisions of items 546.51 and 546.52 are use provisions, and that general interpretative rule 10(e)(i) is applicable in the present case. That rule states that "a tariff classification controlled by use (*other than actual use*) is to be determined in accord-

ance with the use in the United States at, or immediately prior to, the date of importation, *of articles of that class or kind to which the imported articles belong,* and the controlling use is the chief use, *i.e., the use which exceeds all other uses (if any) combined.*" [Italic added.]

Defendant states that it does not dispute the factual determination in *Corrigan* that the Reed Candle Co. candle lamps are used in the institutional trade. It emphasizes, however, it is not the use, or even the chief use, of the imported jars that must be established, but rather the chief use of the "class or kind" of merchandise to which they belong. Accordingly, the defendant argues that plaintiff's reliance on evidence establishing the uniqueness of the candles, their special adaptation to the institutional trade, and their dissimilarity to candles chiefly used in the home, is misplaced. The defendant contends that the record establishes that the imported glass jars come within a "class or kind" of articles used in the household since they fall within the following criteria recently enunciated by the Court of Customs and Patent Appeals in *United States* v. *The Carborundum Co.*, 536 F. 2d 373, 377, 63 CCPA 98, 102, C.A.D. 1172, *cert. denied*, 429 U.S. 979 (1976):

> Factors which have been considered by courts to be pertinent in determining whether imported merchandise falls within a particular class or kind include the *general physical characteristics of the merchandise, the expectation of the ultimate purchasers,* the channels, class or kind of trade in which the merchandise moves, * * * the environment of the sale (i.e., accompanying accessories and the manner in which the merchandise is advertised and displayed, * * * *The use, if any, in the same manner as merchandise which defines the class,* the economic practicality of so using the import, (and) the recognition in the trade of this use. (Citations omitted and italic added.)

The defendant asserts that the "class or kind" of article in issue here is not limited to Reed candle lamps, but includes all candle lamps or candles which belong to the same "class or kind." It argues that the testimony discloses that the imported glass jars are similar to candle lamps used in the home, and that they are used for the same purposes of illumination and decor. It also submits that according to the testimony of plaintiff's witnesses there is no separate class for candles used in the institutional trade, and for candles used in the home. For example, Mr. Reed testified that the candle lamps in issue could be used in the home if they could be obtained from the Sexton Co. In fact, however, they could not be obtained from Sexton.

As in all Customs cases, plaintiff has the burden of overcoming the statutory presumption of correctness which attaches to the classification of the Customs officials. 28 U.S.C. 2635. To overcome this presumption, the plaintiff must prove that the Customs classification

was wrong, and that its claimed classification is correct. *United States* v. *New York Merchandise Co.*, 435 F. 2d 1315, 58 CCPA 53, C.A.D. 1004 (1970); *Technical Tape Corp.* v. *United States*, 55 CCPA 38, C.A.D. 931 (1968).

It is not questioned that the provisions for glassware household articles in items 546.51 and 546.52 are "chief use" provisions, and that what must be ascertained is the chief use of the "class or kind" of articles to which the imported glass jars belong. Thus, the initial question presented is whether the plaintiff has borne its burden of proving that the glass jars in question do not belong to a "class or kind" of merchandise chiefly used in the household.

In Customs classification cases, chief use, when in dispute, is a question of fact to be determined on the basis of positive testimony. *L. Tolbert Co.* v. *United States*, 41 CCPA 161, C.A.D. 544 (1953). Whether the chief use of imported merchandise has been established depends upon the issues and the evidence in each case. *United States* v. *F. W. Woolworth Co.*, 23 CCPA 98, T.D. 47765 (1935).

The case of *United States* v. *The Carborundum Co.*, 536 F. 2d 373, 63 CCPA 98, C.A.D. 1172, *cert. denied*, 429 U.S. 979 (1976), relied upon by both parties in support of their respective positions, sets forth the factors which have been considered by courts in determining whether imported merchandise falls within a particular "class or kind." As previously stated these factors include "the general physical characteristics of the merchandise, the expectation of the ultimate purchasers, the channels, class or kind of trade in which the merchandise moves, * * * the environment of the sale (i.e., accompanying accessories and the manner in which the merchandise is advertised and displayed), * * * the use, if any, in the same manner as merchandise which defines the class, the economic practicality of so using the import, (and) the recognition in the trade of this use." 63 CCPA at 102.

Applying the foregoing pertinent factors to the evidence in this case, it is the finding of the court that the plaintiff has successfully established that the imported glass jars do not belong to a "class or kind" of merchandise chiefly used in the household. The uncontroverted testimony, which the court finds to be credible and reliable, proves beyond question that the imported glass jars are used in places other than the household, namely, the institutional trade which consists of restaurants, hotels, and other public places.

The record clearly discloses that the imported glass jars were specially designed according to Reed's specifications, and were further processed in order to be used as a component part of a candle or candle lamp by institutional users. Their design was the result of experiments with various sizes and shapes in order to meet the specific requirements

of the institutional trade. One of these requirements was for a minimum burning time of 140 hours. To achieve this, the manufacturer had to adhere strictly to the exact diameter of the glass jar. Another requirement was for the opening or mouth of the jar to be so designed as to permit a proper amount of oxygen to enter, while at the same time permitting the right amount of carbon exhaust to escape without causing adverse smoking conditions or odor. In addition, each jar was specially designed for use with a stand or holder.

The unquestioned testimony also shows that the imported glass jars were delivered exclusively to John Sexton Co., a wholesale institutional jobber; that they were usually colored and filled with a low-melting wax; that they were processed and converted by the Sexton Co. into institutional candles; that the candles with the stands were distributed by the Sexton Co. solely to institutional users; and that they were not offered for sale to the gift or retail trade. In summary, the article that was manufactured was an institutional candle designed to fulfill the "expectation of the ultimate purchasers." 63 CCPA at 102.

While *Corrigan* did not deal with the identical tariff provisions under which the merchandise at bar was classified, it finds substantial application here. The merchandise at bar is similar in all material respects to the merchandise in *Corrigan*. The "Parisian" glass jar, the merchandise in *Corrigan*, is one of the three glass jars in the present case. The remaining two glass jars, the "Tiffany" and the "Monterrey," are, without dispute, the same in character, use, and function as the "Parisian" jars. Hence, what was said in *Corrigan*, as to the nature or kind of merchandise in issue, is also applicable here.

Moreover, as to the judicial interpretation and application of the concept of "chief use," there is no basic distinction between the provisions for "blown-glass household articles" in paragraph 218(f) of the Tariff Act of 1930 involved in *Corrigan*, and the present provisions for "glassware household articles" in items 546.51 and 546.52 of the tariff schedules. In both statutory provisions, the fundamental question for determination is the same, i.e., whether the imported articles belong to a class or kind of merchandise chiefly used in the home.

As was pointed out by the court in *Corrigan*, "(t)he collector's classification of the instant merchandise as blown-glass household articles carries with it the presumed finding of fact that they are chiefly used in or about the environs of the home. *M. Pressner & Co.* v. *United States*, 49 Cust. Ct. 221, Abstract 67019; *Ace Importing Co., Inc.* v. *United States*, 44 Cust. Ct. 468, Abstract 64185." 58 Cust. Ct. at 115. This presumption was rebutted in *Corrigan* as to the "Parisian" glass jar. Since the "Parisian" glass jar is similar in all material respects to the remaining two imported glass jars, what was said as

to the rebuttal of the presumption of correctness in *Corrigan* also applies here.

The rationale of the court in *Corrigan*, in denying the classification of the "Parisian" glass jar as a "blown-glass household article" under the provisions of paragraph 218(f), is fully applicable to the present situation. Surely, the specific determination of this court in *Corrigan*, that the "Parisian" glass jar is used in places other than the household, further supports plaintiff's position here.

Defendant does not dispute the factual determination in *Corrigan* that these particular Reed Candle Co. candle lamps are used exclusively in restaurants and hotels. It maintains, nevertheless, that they are classifiable as glass household articles if "they belong to a class or kind of glass articles chiefly used in the home."

The defendant has failed to supply the court with any evidence in support of its position. The record is devoid of any evidence that the imported glass jars were designed and sold for use in the household. On the contrary, as the record reflects, the plaintiff has submitted uncontradicted evidence that the imported glass jars are of a special design rendering them dissimilar to glass containers offered to the gift and retail trade, and that, when further processed, are used in places other than the household.

Furthermore, defendant's attempt to establish that variously styled candle lamps manufactured by Reed's competitors, the Indiana Glass Co., and the Miracle Candle Co., were used both in the home and in restaurants is not helpful. Testimony to the effect that other articles, similar in certain respects to the imported glass jars after processing, may be used in the home as well as in restaurants does not establish the chief use of the glass jars in issue. In its most favorable evaluation, this testimony would simply tend to show that the imported glass jars, after processing, are capable of, or adaptable for, use in the home.

The argument of capability or adaptability of the imported merchandise to the common use of the class in establishing chief use was considered and reviewed by this court in *The Baltimore & Ohio R.R. Co.* v. *United States*. 40 Cust. Ct. 58, C.D. 1959 (1958). In that case, the court found that the imported after-dinner cups and saucers belong to a class of novelty articles chiefly used for display or decoration, and were, therefore, dutiable as decorated china other than tableware under the provisions of paragraph 212, Tariff Act of 1930, as modified, rather than, as classified, as tableware under that paragraph. In affirming this decision, the Court of Customs and Patent Appeals made the following pertinent observation:

> Merely because one *can* drink from the imported cups and saucers does not establish the chief use thereof. A fugitive use or a mere susceptibility or capability of use is not controlling as to

such chief use. [Italic in original.] 47 CCPA 1, 5, C.A.D. 719 (1959).

Defendant further contends that there is nothing about the nature of the imported merchandise, or merchandise of the same class or kind, which prevents its eventual use in the household. In support of this argument, defendant points to the testimony of Mr. Reed. When asked on cross-examination if there was anything about the "Tiffany" jar which would prevent its use in the home, he replied "(t)here is nothing to physically keep someone from using it, if they can purchase it. But they (would) have to be able to purchase it." The mere fact that the imported glass jars may possess characteristics which do not prevent their use in the household is not proof that they are actually used in the household, and surely does not establish that they are "chiefly used" in the household.

On the testimony of record, the court has concluded that plaintiff has overcome the presumption of correctness attached to the classifications of the imported glass jars under the provisions of items 546.51 and 546.52 of the tariff schedules.

On its primary claim that the imported glass jars are containers chiefly used for the packing, transporting, or marketing of merchandise, plaintiff contends that they are similar in nature, use, and characteristics to the merchandise which was the subject of *Will & Baumer Candle Co.* v. *United States*, 37 CCPA 27, C.A.D. 414 (1949), and *United States* v. *Richard Hudnut*, 15 Ct. Cust. Appls. 463, T.D. 42646 (1928). Hence, plaintiff contends that the holdings and the reasoning of those cases are applicable and controlling here.

In *Will & Baumer Candle Co.* v. *United States*, 21 Cust. Ct. 149, C.D. 1146 (1948), the merchandise consisted of open-end glass containers imported empty. They were designed and sold for the purpose of holding and transporting wax for use as a unit in a sanctuary lamp. They were classified as decorated glassware under paragraph 218(f) of the Tariff Act of 1930. The importer claimed classification under paragraph 217 of that act, as modified, as unfilled jars, wholly or in chief value of glass, not specially provided for, suitable for use and of the character ordinarily employed for the holding or transportation of merchandise. This court found that the article was designed and manufactured for a definite purpose other than as a jar "ordinarily employed for the holding or transportation of merchandise," and that the use of the article as a shipping container was incidental to its main or principal use as a holder for the candle when used in the sanctuary lamp. The court stated that "(t)o fall within paragraph 217, the articles must be not only suitable for use for the holding or transportation of merchandise, but must also be of the character ordinarily employed for such purposes." Therefore, it held the imported jars

were not dutiable as jars "suitable for use and of the character ordinarily employed for the holding or transportation of merchandise" within the provisions of paragraph 217. That decision was reversed by the Court of Customs and Patent Appeals. Plaintiff places special emphasis upon the following quoted portion of the decision of the appellate court:

> The candles which are "held or transported"—in the instant case they are both held *and* transported—certainly are merchandise, although they are designed for a special use. The containers themselves, the only articles whose classification is of concern here, are certainly suitable for use in holding the candles and for transporting them, and they are in fact ordinarily so used by appellant. Indeed, they appear to have been developed for those precise uses. They ordinarily hold the merchandise before it is sold and hold it while it is being transported to the purchaser, thus meeting both alternatives designated in the proviso.
>
> We do not think that in order to fall within the meaning of the phraseology of the proviso the containers are required to be of a kind suitable to be used and ordinarily used in holding or transporting *all kinds* of candles. Where a special type of such merchandise exists and a specially designed container is made and used for holding or transporting it, we think the requirement of the statute is met, provided, of course, the container meets the statutory requirements in other respects. [Italic in original.] 37 CCPA at 31.

In arriving at its conclusion, the appellate court indicated that it was persuaded by the reasoning of the *Richard Hudnut* case. In *Hudnut*, the merchandise consisted of decorated talcum powder jars which were assessed under paragraph 218 of the Tariff Act of 1922 as blown-glass articles decorated or ornamented in any manner. The jars were imported empty and filled with talcum powder after importation. Then, by means of a "crimping machine," they were fitted with brass sprinkler or shaker tops, the perforations in which may, by means of slides, be opened or closed at will. The tops were so contrived and fitted that they could not be removed without injury to them and the jars. This court found that, "(t)he specific description of these jars and the use to which they are applied are real distinguishing marks that remove them from paragraph 218 and place them under the provisions of paragraph 217." The court also found that they "are of a character ordinarily employed in the holding and transportation of merchandise" and held that the jars therefore fell clearly within the eo nomine provision of paragraph 217 for lime bottles and jars. 51 Treas. Dec. 304, T.D. 42049 (1927). The Court of Customs Appeals, in affirming that decision, said, "(t)he jars involved in this case are suitable for use and of the character ordinarily employed for the holding and transportation of merchandise—talcum powder; and as they are not appliances or implements in chemical or

other operations, or bottles for table service, or thermostatic bottles, they are directly covered by the provisions of paragraph 217, and more specifically provided for therein than in paragraph 218." 15 Ct. Cust. Appls. at 468.

Plaintiff submits that the evidence in the present case is the same as in the foregoing cases: (1) The glass jars are specially designed for and used by the Reed Candle Co. solely to contain candles which will burn for approximately 140 hours for use by the institutional trade; (2) the glass jars are designed to be used in holders, or stands, manufactured by Reed; (3) the glass jars are used for packing, transporting, and marketing the candles from the time they are decorated and filled by Reed, throughout the period of storage and distribution by the John Sexton Co. to institutional users, and throughout the period of storage by its institutional customers until the candles are consumed and the jars discarded. Hence, plaintiff concludes that the use of the glass jars in this case is principally for packing, transporting, and marketing the candle while it is in the commercial stage.

Plaintiff also asserts that, although the court in *Corrigan* rejected the importer's primary claim that the "Parisian" glass jars should be classified under paragraph 217 as jars suitable for use and of the character ordinarily employed for the holding or transporting of merchandise, a different finding is appropriate in the present case. Plaintiff insists that the language of item 545.27, which encompasses containers "chiefly used for the packing, transporting, or marketing of merchandise," is much broader than the language in the earlier provisions of the Tariff Act of 1930. Furthermore, the court in *Corrigan* found that the jars were not ready or commercially fit upon importation to hold or transport the merchandise they were exclusively designed to carry since further processing was required. In *Corrigan* the imported glass jars had to be colored and decorated before they were filled with candle wax and the wick. On the other hand, in the instant case the evidence shows that the glass jars were offered and could be used as candle jars in their clear condition as containers for candles without further processing.

Even assuming that the articles at issue were not usable in their imported condition as containers for candles, plaintiff states that they would nevertheless be properly classifiable under item 545.27 pursuant to general interpretative rule 10(h). That rule provides that "unless the context requires otherwise, a tariff description of an article covers such article, whether assembled or not assembled, and whether finished or not finished." Plaintiff submits that the coloring and decorating were the only operations performed on the jars before filling them with wax, and that these operations did not change their nature into something other than candle containers.

Finally, plaintiff contends that it is basic in Customs law that an article may be classified under its eo nomine provision if it has been so far processed, advanced, and dedicated to the making of that article or class of articles, or has been so far advanced beyond the stage of materials as to be commercially fit for use only as that article. See *United States* v. *The Servco Co.*, 477 F. 2d 579, 60 CCPA 137, C.A.D. 1098 (1973), and *Daisy-Heddon, Div. Victor Comptometer Corp.* v. *United States*, 600 F. 2d 799, 66 CCPA —, C.A.D. 1228 (1979). Consequently, the plaintiff argues that if the glass jars as imported are not deemed to be containers for the packing, transporting, or marketing of candles, then they should nevertheless be considered unfinished containers since the only process performed on them prior to filling them with wax is the coloring and decorating of the glass to enhance their appearance. Plaintiff therefore maintains that whether deemed finished or unfinished, they are nevertheless properly classifiable under item 545.27.

In the alternative, plaintiff claims that should the court determine that the glass jars are not classifiable under item 545.27, TSUS, then they are classifiable under item 548.05, TSUS, as other articles of glass, not specially provided for. It contends that since the articles are of glass, they come within the purview of item 548.05, a basket provision for those glass articles which are not provided for elsewhere in the tariff schedules.

As to plaintiff's primary claim, defendant contends that the glass jars are not containers for merchandise, but integral parts of candle lamps. It points out that plaintiff's witness, Mr. Reed, testified that after the glass jars are imported, the Reed Candle Co. colors and fills them with wax and a wick, and converts them into candles. Thus, it has created a new article of commerce, a candle or candle lamp. The defendant maintains that since the glass jars have become part of the merchandise which is packed, transported, and marketed, they are not containers for the merchandise. It submits that an article cannot be both the merchandise and the container.

In support of its position the defendant cites the cases of *Bruce Duncan Co.* v. *United States*, 63 Cust. Ct. 412, C.D. 3927 (1969), and *Morris Friedman & Co.* v. *United States*, 56 Cust. Ct. 21, C.D. 2607 (1965). In the *Bruce Duncan* case, metal cartridges filled with butane and invoiced as butane lighter tanks, were classified under item 756.15, TSUS, as parts of cigar and cigarette lighters, Plaintiff claimed that, by virtue of item 475.15 and general headnote 6(b)(i) of the tariff schedules, the tanks were entitled to free entry as the usual transportation containers for butane. The court found that the sole purpose of the cartridge was to serve as a container of fuel for the lighter. It was designed to fill the lighter, and without it the lighter would not be

able to function. Whether or not the tanks contained fuel, however, was held to be without significance. The court held these cartridges were not the usual containers envisioned by general headnote 6(b)(i) of the tariff schedules. Notwithstanding the fact that the cartridges served as shipping containers for the butane, the court held that plaintiff failed to overcome the burden of proving that the classification of the cartridges, as parts of cigar and cigarette lighters, was incorrect.

In the *Morris Friedman* case, the merchandise as imported consisted of a decorative ceramic miniature mug or cup, containing a wax or paraffin substance with a wick in the center. The merchandise had been assessed with regular duty under paragraph 1536 of the Tariff Act of 1930, as modified, as a candle, and with an additional duty on the ceramic portion, as an unusual container under paragraph 211, as modified, as decorated earthenware. The court held the candle to be properly dutiable as an entirety under paragraph 211, as modified. In the course of its opinion, the court stated:

> In the instant case, the merchandise is imported as a unit. It cannot be disassembled without destroying one or both of the components. It is bought and sold as a unit, and functions as a unit. The candle portion never had any separate identity as a candle. While the cup portion might have a separate identity as a miniature mug, it was not imported or used as such, according to the testimony, and required the addition of the wax portion to become the completed article. The cup is *not a container*, usual or unusual, *but an integral functioning portion of the entire article.* [Italic added.] 56 Cust. Ct. at 26.

Defendant contends that the facts in the *Bruce Duncan* and *Morris Friedman* cases are analogous to the present case, and that, therefore, the rationale of those cases is applicable here. Thus, it maintains that the testimony of record here discloses that the glass jars after importation were used as an essential constituent part of the Reed candle lamps; that the wax and wick never had a separate identity as a candle; and that the glass jars were specially designed to become an integral functioning part of Reed's candle lamps. Accordingly, the defendant submits that since the imported merchandise has become an integral part of a manufactured candle, it cannot be both the merchandise and the container.

Defendant submits that prior cases, in which the courts have held imported merchandise to be dutiable as "suitable for use and of the character ordinarily employed for the holding or transportation of merchandise" under predecessor provisions of the Tariff Acts of 1922 and 1930, reveal the type of articles found to be containers. It cites *Balfour-Guthrie & Co.* v. *United States*, 23 CCPA 1, T.D. 47652 (1935) (in which the merchandise consisted of beer (stout) bottles,

imported filled with stout); *De Boer & Livingston (Inc)*. v. *United States*, 58 Treas. Dec. 387, T.D. 44301 (1930) (in which the merchandise consisted of glass bottles used for holding toilet water); and *Frederick Stearns* v. *United States*, 53 Treas. Dec. 38, T.D. 42542 (1928) (in which the imported merchandise consisted of small glass bottles used to hold Astringosol, a mouthwash).

In each of these cases, the court found the merchandise to be suitable for use, and of the character ordinarily employed, for the holding or transportation of merchandise, and therefore classifiable under paragraph 217 of the Tariff Act of 1930. The defendant states that it is clear that the merchandise in these cases was respectively, the beer, the toilet water, and the mouthwash, and that the glass bottles, in each instance, were the containers.

In *Fontana Hollywood Corp.* v. *United States*, 64 Cust. Ct. 204, C.D. 3981 (1970), long-neck gallon bottles, imported filled with chianti wine, were subject to tariff treatment as imported articles, separate from the wine content, under item 546.35 as household articles. Plaintiff's primary contention was that the imported bottles should not have been separately dutiable. Alternatively, it contended that, in the event the bottles were found to be separately dutiable, they were properly classifiable as containers of glass chiefly used for packing, transporting, or marketing merchandise under TSUS item 545.27. As to plaintiff's alternative claim, defendant argued for exclusion of the imported bottles from classification under item 545.27 on the ground that they were unusual containers, that is, of a kind not usually or ordinarily employed to ship, transport, or market merchandise. In rejecting defendant's argument, the court said:

> * * * TSUS item 545.27 does not classify containers ordinarily or commonly employed for the holding or transportation of merchandise (as did par. 217). What it does classify are *containers chiefly used for the packing, transporting, or marketing of merchandise*. The fact that a container is chiefly used for the packing, transportation, or marketing of merchandise is not inconsistent with its not being a bona fide container for transportation, or, if you will "unusual," that is, of a kind not usually or ordinarily employed to ship, transport, or market merchandise. [Italic in original.] 64 Cust. Ct. at 212.

The court upheld plaintiff's alternative claim that if separately dutiable as classified, the bottles were properly classifiable under item 545.27 as containers chiefly used to pack, transport, and market the wine.

The defendant indicates that the glass bottles in *Fontana* were not incidental to the merchandise purchased, and had not become an integral part of the wine, or merchandise, as have the glass jars in the present case. It emphasizes that in all of the cited cases, the

glass containers had a separate identity, that their use was incidental to the contents, and that they had never become an integral constituent part of the merchandise itself.

The *Will & Baumer* and *Hudnut* cases, and the case at bar, are distinguishable since the imported merchandise is significantly different as to characteristics, use, and function. The glass jars in *Will & Baumer* were designed and sold for the definite purpose of holding and transporting wax candles for use as a unit, and inserted in sanctuary lamps of churches. For that purpose, the jar was designed to have a graduated depression or indentation running practically its entire length, and two lugs or projections on its top rim. The red glass lamp shell, into which the imported glass jar and wax candle were to be inserted, had a lug or bulge in its lower portion which fit into the indentation of the glass jar. Originally, the candles were shipped in wooden or cardboard cases but, due to high temperature and handling, often became damaged and out of shape. To rectify that condition, the glass jars were developed to hold and ship the wax candles. At no time were the imported glass jars subjected to further processing in order to accomplish their intended purpose. They were used in the condition as imported, and retained their individual identity and characteristics.

Unlike the imported glass jars in *Will & Baumer*, the imported glass jars at bar were not designed to be used in the condition as imported. Necessary and significant operations were performed before they could be used for their intended purpose. As previously noted, they were specifically designed to hold candles which would burn for approximately 140 hours. Moreover, after importation the jars were colored and the wick was positioned before they were filled with wax sufficient to provide the required 140 hours of illumination. The imported glass jars did not retain their individual identity after importation. The necessary processing converted them into an integral component of a new article of commerce, a candle or candle lamp. Furthermore, it may be added that any doubt as to the holding of the *Will & Baumer* case may be resolved by a reference to the *Hudnut* case upon which the appellate court relied for its decision. Indeed, the court in referring to *Hudnut* in that case stated that "the reasoning there seems analogous and persuasive here." 37 CCPA at 32.

In *Hudnut*, the colored lime glass jars, imported empty, were filled with talcum powder after importation, and were used to hold and transport the talcum powder. They were designed exclusively to contain the talcum powder as is evidenced by the fact they were fitted with brass sprinkler tops that were not removable without injury to them or to the jars. Unlike the glass jars of the instant case, their identity was separate from the talcum powder and not sub-

ordinated to a new combined article. It is obvious that the glass jars in *Hudnut* are significantly different from the glass jars in this case as to their nature, use, and characteristics.

It should also be noted that in *Will & Baumer* and *Hudnut*, the court was concerned with the statutory interpretation and application of the phrase, unfilled glass jars "suitable for use and of the character ordinarily employed for the holding or transportation of merchandise" in paragraph 217 of the Tariff Acts of 1922 and 1930. In the present case, item 545.27 of the tariff schedules provides for containers *chiefly used* for the packing, transporting, or marketing of merchandise. The issue of chief use was neither raised nor determined in the cited cases. Clearly, a decision which holds articles *suitable* for a certain use does not imply or require a finding of *chief use*. *United States* v. *Lorsch & Co.*, 8 Ct. Cust. Appls. 109, T.D. 37222 (1917).

It is plaintiff's contention that the candle wax packed and contained in the imported glass jars is a commercial commodity or an article of commerce, and is merchandise as that term is used in item 545.27. Hence, it claims that the candle wax is the merchandise for which the imported glass jars serve as containers, principally used for its packing, transporting, or marketing. Citing the case of *United States* v. *Lilly & Co. and Parke, Davis & Co.*, 14 Ct. Cust. Appls. 332, T.D. 41970 (1927), quoted with approval in *Border Brokerage Co.* v. *United States*, 50 Cust. Ct. 233, Abstract 67500 (1963), plaintiff states that it is well established that the term "merchandise" includes whatever is bought or sold in trade or by merchants.

In the *Lilly & Co.* case, the imported merchandise consisted of glass ampoules or vials, imported empty, and "specially contrived for the transportation of pharmaceutical and biological preparations which are to be used in a medicinal way." The court found that the medicinal and biological products were generally bought and sold commercially, and were therefore within the common meaning of the term "merchandise." In *Border Brokerage*, the important merchandise consisted of fertilizer sample units that include both a container and fertilizer material. The unit was distributed by the importer as an advertising medium to enhance the sale of its fertilizer material. The court found that the unit—the plastic container and the fertilizer material—was the commericial commodity or the article of commerce, and hence the merchandise.

The respective articles found by the court to be merchandise in the cited cases are distinguishable from the candle wax in the case at bar.

In the *Lilly* case, the merchandise—the medicinal and biological products—had a distinct identity as a separate article of commerce. In transporting these products the imported glass vial also retained its

separate identity as a glass vial. Unlike the candle wax in the present case, the medicinal and biological products were not merged by further processing with the glass vial to create a new and distinct article of commerce.

In *Border Brokerage*, the imported merchandise was the fertilizer sample unit which, in its condition as imported, was designed and ready for use as a complete article of commerce. Since the candle wax is not the imported merchandise in the present case, it is clearly distinguishable from the merchandise in *Border Brokerage*. Furthermore, unlike the fertilizer sample unit, the candle wax to fill the imported glass jars was created in the United States, and serves as a necessary integral part of a new article, a candle lamp, without which it could not function. The candle wax does not have a separate identity, use, or commercial value other than as a combined article with the imported glass jars. This conclusion is inescapable from the testimony of plaintiff's witness, Mr. Reed, who stated that due to its low melt point, the wax would have no form or shape without the glass jars. Plaintiff's contention that the candle wax is the merchandise that was packed and transported in the imported glass jars is therefore without merit.

The foregoing considerations also apply to plaintiff's contention that the imported glass jars serve as containers for the candle wax. Although the glass jars may have had separate identity as glass jars, they were neither designed, nor intended to be used as glass jars. They were designed to be further processed after importation, and required the addition of the wax and wick to become a completed article of commerce. The identity of the imported glass jars was subordinated to the new combined article, a candle or candle lamp.

The meaning of "(c)ontainers * * * chiefly used for the packing, transporting, or marketing of merchandise," as used in item 545.27, and particularly the term "containers," was first judicially interpreted in the *Fontana* case, *supra*. In holding that the imported long-neck gallon bottles, filled with chianti wine, were within the purview of that provision, the court quoted the following reference to item 545.27 in the 1960 Tariff Commission report:

> The proposed provisions for "other" containers (TSUS items 542.21 through 545.27) embraces the bottles and jars commonly used for the packing and transportation of merchandise and are substantially unchanged from the existing provisions in paragraph 217. * * * (Tariff Classification Study, schedule 5, p. 139.) 64 Cust. Ct. at 211.

Consistent with this expression that the present tariff description of the term "containers" is substantially unchanged from the predecessor statute, an examination of the legislative history and judicial interpre-

tation of the terms "bottles" and "jars" encompassed by the prior tariff provisions provides further guidance as to the class or kind of articles held to be containers.

The most recent decision of this court on the meaning of paragraph 217 of the Tariff Act of 1930 is the *Border Brokerage* case, *supra*. In that case, the imported fertilizer sample units, which included both a plastic container and fertilizer material, were classified by similitude in use to manufactures of glass, not specially provided for, under paragraph 230(d) of the Tariff Act of 1930, as modified, and paragraph 1559(a), as amended. Plaintiff claimed that the merchandise was properly classifiable under the provision for nonenumerated manufactured articles in paragraph 1558 of the Tariff Act of 1930, as amended. In the alternative, plaintiff claimed that if the imported merchandise was dutiable by virtue of the similitude provision of paragraph 1559(a), it was then classifiable as similar in use to glass vials, jars, or bottles, filled or unfilled, under paragraph 217 of the Tariff Act of 1930. In rejecting plaintiff's alternative claim, the following observation of the court is particularly pertinent:

> The plastic container is an integral component of the present merchandise, in its condition as imported. It is not the kind of container provided for in paragraph 217 * * *. 50 Cust. Ct. at 235.

In the *Balfour-Guthrie & Co.* case, *supra*, 23 CCPA 1, T.D. 47652 (1935), the court held that certain glass bottles, imported filled with stout, were ordinary beer bottles, and stated that they "are, obviously, designed, suitable, and of the character ordinarily employed, for the holding or transportation of merchandise, and clearly dutiable under paragraph 217." The court indicated that pertinent to its consideration was the determination of the Court of Customs Appeals in *United States* v. *Sassi*, 13 Ct. Cust. Appls. 319, T.D. 41233 (1925). The *Sassi* case dealt with paragraph 217 of the Tariff Act of 1922, the predecessor of paragraph 217 of the Tariff Act of 1930. The imported merchandise there consisted of empty chianti bottles, partly covered with straw, and used for the holding and transporting of vinegar. The bottles were held to be within the scope of paragraph 217, Tariff Act of 1922, as bottles, "suitable for use and of the character ordinarily employed for the holding or transportation of merchandise."

Other cases describing the characteristics of the class or kind of bottles * * * or jars found by this court to be embraced within the provisions of paragraph 217 of the Tariff Act of 1922 have been examined earlier in this opinion. See *De Boer & Livingston (Inc.)* v. *United States*, 58 Treas. Dec. 387, T.D. 44301 (1930), and *Frederick Stearns* v. *United States*, 53 Treas. Dec. 38, T.D. 42542 (1928).

On the provisions of paragraph 217 of the Tariff Act of 1922, the

"Summary of Tariff Information" (1929), a recommended source to resolve questions on the meaning and scope of terms which appear in various tariff acts, states at page 504:

> GLASS BOTTLES AND OTHER GLASS CONTAINERS
>
> Description and uses.—The glass bottles and other glass containers covered by this paragraph are the usual and *ordinary glass containers used for beverages, foodstuffs, chemicals, medicines, vaccines, antitoxins,* and other *commodities,* such as *scouring* and *cleansing creams, powders, polishes,* and *soaps.* [Italic added.]

The authorities teach that the class or kind of containers intended by Congress to be embraced by the provisions of item 545.27 are the usual, ordinary, and commonly used glass containers for various commodities or merchandise. Hence, the imported glass jars which were designed to be used, and were used, as an integral part of a new article of commerce, a candle or candle lamp, are not encompassed by that provision.

As previously noted, plaintiff's claimed classification is based on chief use. It is axiomatic that chief use "is to be determined in accordance with the use in the United States at, or immediately prior to, the date of importation, of articles of that class or kind to which the imported articles belong, and the controlling use is the chief use, i.e., the use which exceeds all other uses (if any) combined." TSUS general interpretative rule 10(e)(i).

On the record presented and the applicable authorities, it is the determination of the court that the imported glass jars are not containers, as that term is used in item 545.27, and do not meet the requirement of chief use as containers within that statutory provision.

Plaintiff has referred to general interpretative rule 10(h) which provides that "unless the context requires otherwise, a tariff description for an article covers such article, whether assembled or not assembled, and whether finished or not finished." It maintains that the only processing performed on the imported glass jars, prior to their filling with candle wax and wick, was the coloring and decorating. Accordingly, plaintiff contends that this operation did not change the nature of the imported glass jars into something other than candle containers, the use for which they were dedicated in their condition as imported.

Plaintiff has also urged that in Customs law an article may be classified under the eo nomine provision for that article if it has been so far processed, advanced, and dedicated to the making of that article or class of articles, or has been so far advanced beyond the stage of materials as to be commercially fit for use only as that article. *United States* v. *The Servco Co.*, 477 F. 2d 579, 60 CCPA 137, C.A.D. 1098 (1973); *Finn Bros. Inc.* v. *United States*, 454 F. 2d 1404, 59 CCPA 72, C.A.D.

1042 (1972); *American Import Co.* v. *United States*, 26 CCPA 72, T.D. 49612 (1938). The principle stated is inapplicable here for the record shows that the imported glass jars were not dedicated to use merely as containers. The jars were employed as articles to be further processed in the ultimate production of a new and different article, to wit, a candle or candle lamp, an article with a distinctive character and intended use, different from the imported glass jars. Therefore, the imported glass jars cannot be considered containers, whether finished or unfinished.

Plaintiff's contention that the eo nomine designation applies to this case is unpersuasive for two additional reasons. First, it is clear that the term "containers" in item 545.27 is a "use" description, and not an "eo nomine" designation. Second, the eo nomine designation has no application since the record conclusively establishes that the imported glass jars were so far advanced by processing as to become more than mere glass jars. They were transformed into a new and different article, a candle or candle lamp. On this point, the following observation of this court in *Border Brokerage Co.* v. *United States*, 41 Cust. Ct. 264, C.D. 2049 (1958), is particularly pertinent:

> We are in accord with the general principle of law, which is well established and widely used in customs jurisprudence, that an eo nomine designation without terms of qualification or limitation embraces the named product in all forms and conditions. However, the principle of law is not to be used indiscriminately or without limitation. Where an article has been so far advanced as to have been transformed into a new article or dedicated to a particular use, this principle of law is inapplicable. 41 Cust. Ct. at 266.

The court has determined that the imported glass jars were improperly classified as other glassware household articles under the provisions of items 546.51 and 546.52 of the tariff schedules. It is also the determination of the court that the plaintiff has failed to sustain its burden of proof that the imported glass jars are properly classifiable under item 545.27 of the tariff schedules as "(c)ontainers * * * chiefly used for the packing, transporting, or marketing of merchandise." With respect to those glass jars classified under items 546.51 and 546.52, it is necessary to determine the validity of plaintiff's alternative claim under item 548.05. Plaintiff contends that if its claim for their classification under item 545.27 is not sustained, then they are properly classifiable under item 548.05, a basket provision for all articles of glass, not specially provided for. *L & B Products Corp.* v. *United States*, 70 Cust. Ct. 30, C.D. 4404 (1973); "Tariff Classification Study," schedule 5 at 145.

It is undisputed that all of the imported glass jars in issue are, in fact, glass articles. Since there is no more specific provision in the

tariff schedules under which they may be classified, they come within the purview of item 548.05 as alternatively claimed by plaintiff. Consequently, the classification of the Customs officials is overruled as to all of the "Tiffany," all of the "Monterrey," and those "Parisian" glass jars classified under items 546.51 and 546.52; and sustained as to those "Parisian" glass jars classified under item 548.05.

Accordingly, upon the record before the court and for the reasons stated, it is the determination of the court that all of the imported glass jars are properly classifiable under the provisions of item 548.05 of the Tariff Schedules of the United States (TSUS) as other articles, not specially provided for, of glass, and dutiable at the rate of 25, 22, or 20 per centum ad valorem depending upon the date of entry.

Judgment will be entered accordingly.

Decisions of the United States Customs Court

Abstracts

Abstracted Protest Decisions

DEPARTMENT OF THE TREASURY, *April 7, 1980.*

The following abstracts of decisions of the United States Customs Court at New York are published for the information and guidance of officers of the customs and others concerned. Although the decisions are not of sufficient general interest to print in full, the summary herein given will be of assistance to customs officials in easily locating cases and tracing important facts.

ROBERT E. CHASEN,
Commissioner of Customs.

DECISION NUMBER	JUDGE & DATE OF DECISION	PLAINTIFF	COURT NO.	ASSESSED	HELD	BASIS	PORT OF ENTRY AND MERCHANDISE
				Par. or Item No. and Rate	Par. or Item No. and Rate		
P80/47	Ford, J. March 31, 1980	Camel Manufacturing Co.	78-3-00554, etc.	Item 338.30 13¢ per lb. + 22.5%	Item 355.82 12.5¢ per lb. 15%	H. Rosenthal Co. v. U.S. (C.D. 4769, aff'd C.A.D. 1236)	Los Angeles Coated nylon taffeta
P80/48	Richardson, J. March 31, 1980	Sortex Co. of North America	74-5-01128, etc.	Item 712.40 10%	Item 666.25 5.5%	Sortex Company of North America, Inc., v. U.S. (C.D. 4746, aff'd C.A.D. 1221)	Detroit Electronic color sorting machines and parts

DEISION NUMBER	JUDGE & DATE OF DECISION	PLAINTIFF	COURT NO.	ASSESSED	HELD	BASIS	PORT OF ENTRY AND MERCHANDISE
				Par. or Item No. and Rate	Par. or Item No. and Rate		
P80/49	Maletz, J. March 31, 1980	Phone Mate, Inc.	78-8-01451, etc.	Item 735.20 10%	Item 734.20 5.5%	APF Electronics Inc. v. U.S. (C.D. 4784)	Los Angeles Electronic TV games
P80/50	Richardson, J.	WMF of America, Inc.	76-1-00031	Item 653.37 9.5%	Item 653.35 5%	Judgment on the pleadings U.S. v. Morris Friedman & Co. (C.A.D.'s 1156, 1157)	New York Brass candlesticks
P80/51	Maletz, J. March 31, 1980	Nadel Trading Corp.	79-10-01502	Item 737.95 17.5%	Item 734.20 5.5%	Mego Corp. v. U.S. (C.A.D. 1137)	New York Pin ball games
P80/52	Watson, J. March 31, 1980	Mobay Chemical Corp.	77-12-04887	Item 405.25 9%+1.4¢ per lb.	Item 494.60 2.5%	Naftone, Inc. v. U.S. (C.D. 4578, aff'd C.A.D. 1166)	Boston Desmocoll 176; hydroxylated polyurethane products
P80/53	Watson, J. March 31, 1980	World Famous Sales Co. et al.	75-9-02437, etc.	Item 389.60 25¢ per lb. + 15%	Item 735.20 10%	The Newman Importing Co., Inc. v. U.S (C.D. 4648)	Chicago Nylon backpacking tents

Decisions of the United States Customs Court

Abstract

Abstracted Reappraisement Decision

DECISION NUMBER	JUDGE & DATE OF DECISION	PLAINTIFF	COURT NO.	BASIS OF VALUATION	HELD VALUE	BASIS	PORT OF ENTRY AND MERCHANDISE
R80/101	Re, C. J. March 31, 1980	Scope Imports, Inc.	75-8-02094, etc.	Export value	Appraised values shown on entry papers less those additions included in appraised values to reflect currency revaluation	C.B.S. Imports Corp. v. U.S. (C.D. 4739)	Houston Nylon snorkel coats, waterproof silver coat backing

International Trade Commission Notices

Investigations by the U.S. International Trade Commission

DEPARTMENT OF THE TREASURY

The appended notices relating to investigations by the U.S. International Trade Commission are published for the information of Customs officers and others concerned.

R. E. CHASEN,
Commissioner of Customs.

In the Matter of CERTAIN TURNING MACHINES AND COMPONENTS THEREOF	Investigation No. 337-TA-72

Commission Determination, Order, and Memorandum Opinion

On February 13, 1980, the presiding officer certified to the U.S. International Trade Commission a recommended partial summary determination of no literal infringement of claims 1, 2, 3, 8, 10, 14, 18, 19, and 22 of U.S. Reissue Patent No. 29,612 in the Commission's investigation under section 337 of the Tariff Act of 1930 (19 U.S.C. 1337) of alleged unfair methods of competition and unfair acts in the importation and sale of certain turning machines and components thereof in the United States. This recommendation resulted from a motion filed on December 28, 1979, by respondents Yamazaki Machinery Works, Ltd., and Yamazaki Machinery Corp. (motion docket No. 72-7).

On March 28, 1980, the Commission denied the motion for partial summary determination of noninfringement of certain claims of U.S. Reissue Patent No. 29,612 because genuine issues of material fact remain (19 CFR 210.50).

Accordingly, it is ORDERED THAT—

(1) Respondents' motion for partial summary determination be denied; and

(2) Since genuine issues of material fact still exist, the matter on infringement be remanded to the presiding officer to develop a record on all issues and to continue adjudication on that case, in particular—

(a) with respect to the claims requirement that the carrier and carrier support means be disposed alongside the rotatable member, that a record be developed as to whether an addition of a tailstock extends the spindle's location vis-a-vis the carrier;

(b) with respect to the claims requirement that the tool turret and tool support be movable toward the carrier from a retracted position to a maximum advanced position, that a record be developed as to whether respondents' turning machine may affect machining while moving toward the carrier; whether the workstroke toward the carrier must be simultaneous toward the spindle; and whether machining may be done in the X-axis by respondents' turning machine.

By order of the Commission.
Issued: April 10, 1980.

KENNETH R. MASON,
Secretary.

Investigation No. 701–TA–62 (Final)

TEXTILES AND TEXTILE PRODUCTS OF COTTON FROM PAKISTAN

Notice of Institution of Final Countervailing Duty Investigation and Scheduling of Hearing

AGENCY: U.S. International Trade Commission.

ACTION: Institution of a final countervailing duty investigation.

SUMMARY: As a result of the affirmative preliminary determination on March 17, 1980, by the International Trade Administration, U.S. Department of Commerce, that subsidies are being paid on textiles and textile products from Pakistan provided for in item numbers of the Tariff Schedules of the United States (TSUS) set forth in attachment A, the U.S. International Trade Commission (hereinafter the Commission) hereby gives notice of the institution of investigation No. 701–TA–62 (final) to determine whether an industry in the United States is materially injured, or is threatened with material injury, or the establishment of an industry in the United States is materially retarded, by reason of imports of such articles.

EFFECTIVE DATE: April 8, 1980.

FOR ADDITIONAL INFORMATION, CONTACT: Ms. Vera

Libeau, Senior/Supervisory Investigator, Office of Operations, U.S. International Trade Commission, room 339, 701 E Street NW., Washington, D.C. 20436; telephone 202-523-0368.

SUPPLEMENTARY INFORMATION: The provisions of the Trade Agreements Act of 1979 (Public Law 96-39, 93 Stat. 144) amending the Tariff Act of 1930 (19 U.S.C. 1303) (hereinafter the act) became effective on January 1, 1980. Section 705(b)(1) of the act requires the Commission to make a final injury determination where the administering authority, the Department of Commerce, has made an affirmative final determination as to whether a subsidy is being provided with respect to the merchandise which is the subject of its investigation.

This investigation will be conducted according to the provisions of part 207 of the Commission's Rules of Practice and Procedure (19 CFR 207, 44 F.R. 76457), subpart C, effective January 1, 1980.

WRITTEN SUBMISSIONS: Any person may submit a written statement of information pertinent to the subject matter of this investigation. A signed original and 19 true copies of each submission must be filed at the Office of the Secretary, U.S. International Trade Commission Building, 701 E Street NW., Washington, D.C. 20436, on or before June 30, 1980.

All written submissions, except for confidential business data, will be available for inspection by interested persons at the Office of the Secretary and in the Commission's New York Office, 6 World Trade Center, New York, N.Y. 10048. Any submission of business information for which confidential treatment is desired shall be submitted separately from other documents. The envelope and all pages of such submissions must be clearly labeled "Confidential business information." Confidential submissions must conform with the requirements of section 201.6 of the Commission's Rules of Practice and Procedure (19 CFR 201.6).

A staff report containing preliminary findings of fact will be available to all interested parties on June 3, 1980.

HEARING: The Commission will hold a hearing in connection with this investigation on June 25, 1980. It will be held in the hearing room of the U.S. International Trade Commission Building, 701 E Street NW., Washington, D.C. 20436, and will begin at 10 a.m., e.d.t. Parties wishing to participate should notify the Office of the Secretary not later than 5 days prior to the date of the hearing. In addition, all parties desiring to appear at the hearing and make oral presentations must submit prehearing statements. Such statements must be filed on or before June 17, 1980. For further information concerning the conduct of the investigation, hearing procedures, and rules of general

application, consult the Commission's Rules of Practice and Procedure, part 207, subpart C (19 CFR 207), and part 201, subparts A through E (19 CFR 201).

This notice is published pursuant to section 207.20 of the Commission's Rules of Practice and Procedure (19 CFR 207.20, 44 F.R. 76458).

Textiles and Textile Products of Cotton From Pakistan

Investigation No. 701–TA–62 (Final)

ATTACHMENT A—TSUS NUMBERS

Yarn and thread

300.60	302.—	303.20
301.—	303.10	

Cordage

315.05	315.10	315.15

Woven fabric

319.21	322.—	329.—
319.23	323.—	330.—
319.25	324.—	331.—
319.27	325.—	332.10
319.29	326.—	332.40
320.—	327.—	
321.—	328.—	

Knit, pile, tufted and narrow fabrics; braids, and elastic fabrics

345.10(a)	346.30	347.10
345.35(a)	346.32	347.15
346.05	346.35	347.26
346.10	346.40	347.33
346.15	346.45	348.05(a)
346.20	346.50(a)	349.10(a)
346.22	346.56(a)	349.15
346.24	346.70	349.30(a)

Lace, netting and ornamented fabrics

351.05	351.60(a)	352.50
351.25(a)	351.80(a)	352.80(a)
351.40(a)	351.90(a)	353.10(a)
351.46(a)	352.10(a)	353.50(a)
351.50(a)		

Other fabrics of special construction and articles thereof

355.02	357.05(a)	358.05(a)
355.35	357.70(a)	359.10
355.50	357.80(a)	

Floor coverings

360.20	360.81	361.50
360.25	361.05(a)	361.54(a)
360.30	361.18(a)	361.56(a)
360.76		

Bedding

363.01	363.40(a)	363.51(a)
363.05(a)	363.45(a)	363.55(a)
363.30	363.50(a)	363.60(a)

Tapestries, linens and other furnishings

364.07	366.06	366.47
364.13	366.09	366.57(a)
364.16(a)	366.15(a)	366.60
365.00	366.18	366.63
365.40(a)	366.21	366.65
365.50(a)	366.24	366.69
365.75(a)	366.27	366.75
365.77	366.42	366.77
365.78	366.45	366.79
366.03	366.46	727.82

Handkerchiefs

370.04(b)	370.24(b)	370.36(b)
370.08(b)	370.28(b)	
370.16(b)	370.32(b)	
370.40(b)		
370.44(b)		
370.48(b)		

Handkerchiefs—Continued

370.52(b)
370.56(b)
370.60(b)
370.64(b)
370.68(b)

Mufflers, scarves, shawls, and veils; and neckties

372.04(b)	372.10(a)(b)	373.05
372.08(b)	372.15(b)	373.10(a)

Other wearing apparel and accessories

376.04(a)(b)	380.06	380.33
376.54(b)	380.09	380.36
378.05(a)(b)	380.12	380.39
378.10(a)(b)	380.15	380.45(a)
378.15(a)(b)	380.18	380.51(a)
378.20(b)	380.21	380.72(a)
378.25(b)	380.24	380.75(a)
380.00	380.27	380.90(a)
380.05(a)	380.30	

Miscellaneous textile products

385.25	385.55(a)	385.80(a)
385.30	385.60(a)	386.04
385.40	385.75(a)	386.50

Headwear, gloves, luggage, and handbags

702.06(b)	704.15(a)(b)	706.20(a)(b)
702.12(b)	704.40(a)(b)	706.22(b)
704.05(a)(b)	704.45(a)(b)	706.24(a)(b)
704.10(a)(b)	704.50(a)(b)	

(a) Cotton articles classified under this TSUS number are covered by this notice if they are included in the textile category system used by the United States to monitor and administer the U.S. textile trade agreements made pursuant to the Arrangement Regarding International Trade in Textiles, done December 20, 1973, 25 U.S.T. 1001, TIAS 7840.

(b) If the item is for men and boys, it is included in this notice. The term "men and boys" should be interpreted in accordance with the applicable headnotes to the schedule, part, and subpart in which the TSUS number falls. Where the phrase is not covered by such headnotes, items classified under the TSUS number which can be used by

either sex are covered by this notice. Items under TSUS numbers identifiable as being intended exclusively for women are not covered by this notice.

By order of the Commission.

Issued: April 10, 1980.

KENNETH R. MASON,
Secretary.

In the Matter of CERTAIN HOLLOW FIBER ARTIFICIAL KIDNEYS	Investigation No. 337-TA-81

Order

Pursuant to my authority as Chief Administrative Law Judge of this Commission, I hereby designate Administrative Law Judge Janet D. Saxon as presiding officer in this investigation.

The Secretary shall serve a copy of this order upon all parties of record and shall publish it in the Federal Register.

Issued: April 3, 1980.

DONALD K. DUVALL,
Chief Administrative Law Judge.

Index

U.S. Customs Service

Treasury decisions: T.D. No.

Customs-approved public gager 80–99

Cancellation of customs broker's license of William G. Folds, license No. 4912, effective March 11, 1980 80–100

Foreign currencies:

Daily certified rates; March 24–28, 1980 80–101

Rates which varied from quarterly rate; week of March 24–31, 1980 80–102

Certified quarterly rates; April through June 1980 80–103

Customs Court

Articles not specially provided for, of glass, C.D. 4852

Chief use:

Containers for the packing, transporting or marketing of merchandise, C.D. 4852

General Interpretative Rule 10(e)(i), C.D. 4852

Household articles, C.D. 4852

Construction:

Tariff Act of 1930, par. 217, C.D. 4852

Tariff Schedules of the United States:

General Headnotes and Rules of Interpretation:

Rule 10(e)(i), C.D. 4852

Rule 10(h), C.D.'s 4851, 4852

Item 545.27, C.D. 4852

Item 546.51, C.D. 4852

Item 546.52, C.D. 4852

Item 548.05, C.D. 4852

Item 700.52, C.D. 4851

Item 774.60, C.D. 4851

U.S. Code, title 19, sec. 1304(a)(3)(G), C.D. 4852

U.S. Code, title 28, sec. 2635, C.D. 4852

Containers for the packing, transporting or marketing of merchandise; chief use, C.D. 4852

Footwear:

Finished or unfinished, C.D. 4851

Of rubber or plastics: rubber overshoes, C.D. 4851

Glass: General Interpretative Rule 10(e)(i); chief use, C.D. 4852

Candle jars, C.D. 4852

Jars; other glass containers chiefly used for the packing, transporting or marketing of merchandise, C.D. 4852

Household articles; chief use, C.D. 4852

"Hurricane" glass jars, C.D. 4852

Jars, glass, C.D. 4852
Legislative history:
Summary of Tariff Information, 1929, p. 504, C.D. 4852
Tariff Classification Study, 1960, schedule 5, p. 139, C.D. 4852
"Monterrey" glass jars, C.D. 4852
Other articles:
Not specially provided for, of rubber or plastics, C.D. 4851
Of glass, not specially provided for, C.D. 4852
Other:
Glass containers chiefly used for the packing, transporting or marketing of merchandise; glass jars, C.D. 4852
Glassware household articles, not specially provided for, C.D. 4852
Overshoes, rubber, C.D. 4851
"Parisian" glass jars, C.D. 4852
Parts of footwear, C.D. 4851
Rubber:
Or plastics, footwear of, C.D. 4851
Overshoes; footwear of rubber or plastics, C.D. 4851
Teardrop glass jars, C.D. 4852
"Tiffany" glass jars, C.D. 4852
Words and phrases:
Container, C.D. 4852
Merchandise, C.D. 4852

MAY 6 1980
318-660
350
Item 950-D
continue
T1.11/3:14/19

Customs Bulletin

Regulations, Rulings, Decisions, and Notices concerning Customs and related matters

and Decisions

of the United States Court of Customs and Patent Appeals and the United States Customs Court

Vol. 14 MAY 7, 1980 No. 19

9247

This issue contains

T.D. 80-105 through 80-109
C.A.D. 1243 and 1244
Protest abstracts P80/54 through P80/57
Reap. abstracts R80/102 through R80/106
International Trade Commission Notice

THE DEPARTMENT OF THE TREASURY
U.S. Customs Service

NOTICE

The abstracts, rulings, and notices which are issued weekly by the U.S. Customs Service are subject to correction for typographical or other printing errors. Users may notify the U.S. Customs Service, Logistics Management Division, Washington, D.C. 20229, of any such errors in order that corrections may be made before the bound volumes are published.

For sale by the Superintendent of Documents, U.S. Government Printing Office, Washington, D.C. 20402. Price: $1.30 (single copy domestic); $1.65 (single copy foreign). Subscription price: $65.00 a year domestic; $81.25 a year foreign.

U.S. Customs Service

Treasury Decisions

(T.D. 80–105)

Bonds

Approval of a carrier's bond, Customs form 3587

A bond of a carrier for the transportation of bonded merchandise has been approved as shown below. The approval of the bond is temporary until July 24, 1980.

Dated: April 17, 1980.

Name of principal and surety	Date of bond	Date of approval	Filed with district director/area director/amount
Russ's Motor Service, Inc., 5070 Lake St., Helrose Park, Il; motor carrier; International Fidelity Insurance Co.	Feb. 27, 1980	Mar. 25, 1980	Chicago, Il; $25,000

BON–3–03

ALFRED G. SCHOLLE,
Director,
Carriers, Drawback and Bonds Division.

(T.D. 80–106)

Cotton Textile Products-Restriction on Entry

Restriction on entry of cotton textile products manufactured or produced in Pakistan

There is published below a directive of March 5, 1980, received by the Commissioner of Customs from the chairman, Committee for the Implementation of Textile Agreements, concerning restriction on entry of cotton textile products in category 320 manufactured or produced in Pakistan. This directive amends, but does not cancel, that committee's directive of December 20, 1979 (T.D. 80–60).

This directive was published in the Federal Register on March 10, 1980 (45 F.R. 15249), by the committee.

(QUO-2-1)

Dated: April 18, 1980.

WILLIAM D. SLYNE
(For Chester R. Krayton,
Director, Duty Assessment Division).

U.S. DEPARTMENT OF COMMERCE,
INTERNATIONAL TRADE ADMINISTRATION,
Washington, D.C., March 5, 1980.

Committee for the Implementation of Textile Agreements

COMMISSIONER OF CUSTOMS,
Department of the Treasury,
Washington, D.C.

DEAR MR. COMMISSIONER: This directive amends, but does not cancel, the directive issued to you on December 20, 1979, by the chairman, Committee for the Implementation of Textile Agreements, concerning imports into the United States of certain cotton textile products, produced or manufactured in Pakistan.

Under the terms of the Arrangement Regarding International Trade in Textiles done at Geneva on December 20, 1973, as extended on December 15, 1977; pursuant to the Bilateral Cotton Textile Agreement of January 4, 1978, as amended, between the Governments of the United States and Pakistan; and in accordance with the provisions of Executive Order 11651 of March 3, 1972, as amended by Executive Order 11951 of January 5, 1977, you are directed to prohibit, effective on March 10, 1980, and for the 12-month period beginning on January 1, 1980, and extending through December 31, 1980, entry into the United States for consumption and withdrawal from warehouse for consumption of cotton textile products in category 320, produced or manufactured in Pakistan, in excess of 10 million square yards.[1]

The actions taken with respect to the Government of Pakistan and with respect to imports of cotton textile products from Pakistan have been determined by the Committee for the Implementation of Textile Agreements to involve foreign affairs functions to the United States. Therefore, the directions to the Commissioner of Customs, which are

[1] The level of restraint has not been adjusted to reflect any imports after Dec. 31, 1979.

necessary for the implementation of such actions, fall within the foreign affairs exception to the rulemaking provisions of 5 U.S.C. 553. This letter will be published in the Federal Register.

Sincerely,

PAUL T. O'DAY,
Chairman, Committee for the Implementation of Textile Agreements.

(T.D. 80-107)

Wool and Manmade Fiber Apparel Products-Restriction on Entry

Restriction on entry of wool and manmade fiber apparel products manufactured or produced in Yugoslavia

There is published below a directive of February 27, 1980, received by the Commissioner of Customs from the chairman, Committee for the Implementation of Textile Agreements, concerning the cancellation of import controls on products in categories 443 and 643 manufactured or produced in Yugoslavia. This directive cancels and supersedes that committee's directive of December 19, 1979 (T.D. 80-48).

This directive was published in the Federal Register on March 3, 1980 (45 F.R. 13792), by the committee.

(QUO-2-1)

Dated: April 18, 1980.

WILLIAM D. SLYNE
(For Chester R. Krayton,
Director, Duty Assessment Division).

U.S. DEPARTMENT OF COMMERCE,
INTERNATIONAL TRADE ADMINISTRATION,
Washington, D.C., February 27, 1980.

Committee for the Implementation of Textile Agreements

COMMISSIONER OF CUSTOMS,
Department of the Treasury,
Washington, D.C.

DEAR MR. COMMISSIONER: This directive cancels and supersedes the directive of December 19, 1979, from the chairman of the Committee for the Implementation of Textile Agreements which directed you to prohibit, effective on January 1, 1980, and for the 12-month period extending through December 31, 1980, entry into the United

States for consumption and withdrawal from warehouse for consumption of wool and manmade fiber textile products in categories 443 and 643, produced or manufactured in Yugoslavia, in excess of the designated level of restraint, effective on March 3, 1980.

The action taken with respect to the Government of the Socialist Federal Republic of Yugoslavia and with respect to imports of wool and manmade fiber textile products from Yugoslavia has been determined by the Committee for the Implementation of Textile Agreements to involve foreign affairs functions of the United States. Therefore, the directions to the Commissioner of Customs, which are necessary for the implementation of such actions, fall within the foreign affairs exception to the rulemaking provisions of 5 U.S C. 553. This letter will be published in the Federal Register.

Sincerely,

PAUL T. O'DAY,
Chairman, Committee for the Implementation of Textile Agreements.

(T.D. 80–108)

Cotton Textile Products-Restriction on Entry

Restriction on entry of cotton textile products manufactured or produced in the Philippines

There is published below a directive of March 28, 1980, received by the Commissioner of Customs from the acting chairman, Committee for the Implementation of Textile Agreements, concerning restriction on entry of cotton textile products in category 331 manufactured or produced in the Philippines. This directive amends, but does not cancel, that committee's directive of December 19, 1979 (T.D. 80–51).

This directive was published in the Federal Register on April 2, 1980 (45 F.R. 21673), by the committee.

(QUO-2-1)

Dated: April 18, 1980.

WILLIAM D. SLYNE
(For Chester R. Krayton,
Director, Duty Assessment Division).

U.S. DEPARTMENT OF COMMERCE,
INTERNATIONAL TRADE ADMINISTRATION,
Washington, D.C. March 28, 1980.

Committee for the Implementation of Textile Agreements

COMMISSIONER OF CUSTOMS,
Department of the Treasury,
Washington, D.C.

DEAR MR. COMMISSIONER: This directive amends, but does not cancel, the directive issued to you on December 19, 1979, by the chairman, Committee for the Implementation of Textile Agreements, concerning imports into the United States of certain cotton, wool, and manmade fiber textile products, produced or manufactured in the Philippines.

Under the terms of the Arrangement Regarding International Trade in Textiles done at Geneva on December 20, 1973, as extended on December 15, 1977; pursuant to the Bilateral Cotton, Wool and Man-Made Fiber Textile Agreement of August 22 and 24, 1978, as amended, between the Governments of the United States and the Republic of the Philippines; and in accordance with the provisions of Executive Order 11651 of March 3, 1972, as amended by Executive Order 11951 of January 6, 1977, you are directed to prohibit, effective on April 3, 1980, and for the 12-month period beginning on January 1, 1980, and extending through December 31, 1980, entry into the United States for consumption and withdrawal from warehouse for consumption of cotton textile products in category 331, produced or manufactured in the Philippines, in excess of the following level of restraint:

Category	*12-month Level of restraint* [1]
331	585,015 dozen pairs

Cotton textile products in category 331 which have been exported to the United States prior to January 1, 1980, shall not be subject to this directive.

Cotton textile products in category 331 which have been released from the custody of the U.S. Customs Service under the provisions of 19 U.S.C. 1448(b) or 1484(a)(1)(A) prior to the effective date of this directive shall not be denied entry under this directive.

A detailed description of the textile categories in terms of TSUSA numbers was published in the Federal Register on February 28,1980 (45 F.R. 13172).

[1] The level of restraint has not been adjusted to reflect any imports after Dec. 31, 1979. Imports during January 1980 amounted to 266 dozen pairs.

In carrying out the above directions, entry into the United States for consumption shall be construed to include entry for consumption into the Commonwealth of Puerto Rico.

The action taken with respect to the Government of the Republic of the Philippines and with respect to imports of cotton textile products from the Philippines has been determined by the Committee for the Implementation of Textile Agreements to involve foreign affairs functions of the United States. Therefore, the directions to the Commissioner of Customs which are necessary for the implementation of such actions, fall within the foreign affairs exception to the rulemaking provisions of 5 U.S.C. 553. This letter will be published in the Federal Register.

Sincerely,

ARTHUR GAREL,
Acting Chairman, Committee for the Implementation of Textile Agreements.

(T.D. 80-109)

Cotton Textile Products-Restriction on Entry

Restriction on entry of cotton textile products manufactured or produced in the Dominican Republic

There is published below a directive of March 3, 1980, received by the Commissioner of Customs from the chairman, Committee for the Implementation of Textile Agreements, concerning restriction on entry of cotton textile products in category 340 manufactured or produced in the Dominican Republic. This directive amends, but does not cancel, that committee's directive of November 28, 1979 (T.D. 80-32).

This directive was published in the Federal Register on March 5, 1980 (45 F.R. 14616), by the committee.

(QUO-2-1)

Dated: April 18, 1980.

WILLIAM D. SLYNE
(For Chester R. Krayton,
Director, Duty Assessment Division).

U.S. DEPARTMENT OF COMMERCE,
INTERNATIONAL TRADE ADMINISTRATION,
Washington, D.C., March 3, 1980.

Committee for the Implementation of Textile Agreements

COMMISSIONER OF CUSTOMS,
Department of the Treasury,
Washington, D.C.

DEAR MR. COMMISSIONER: On November 28, 1979, the chairman, Committee for the Implementation of Textile Agreements, directed you to prohibit entry during the 12-month period beginning on June 1, 1979, and extending through May 31, 1980, of cotton and manmade fiber textile products in certain specified categories, produced or manufactured in the Dominican Republic, in excess of designated levels of restraint. The chairman further advised you that the levels of restraint are subject to adjustment.[1]

Under the terms of the Arrangement Regarding International Trade in Textiles done at Geneva on December 20, 1973, as extended on December 15, 1977; pursuant to the Bilateral Cotton, Wool and Man-Made Fiber Textile Agreement of August 7 and 8, 1979, between the Governments of the United States and the Dominican Republic; and in accordance with the provisions of Executive Order 11651 of March 3, 1972, as amended by Executive Order 11951 of January 6, 1977, you are directed, effective on March 3, 1980, to increase the 12-month level of restraint for category 340 to 130,723 dozen.[2]

The action taken with respect to the Government of the Dominican Republic and with respect to imports of cotton textile products from the Dominican Republic have been determined by the Committee for the Implementation of Textile Agreements to involve foreign affairs functions of the United States. Therefore, the directions to the Commissioner of Customs, being necessary to the implementation of such actions, fall within the foreign affairs exception to the rulemaking provisions of 5 U.S.C. 533. This letter will be published in the Federal Register.

Sincerely,

PAUL T. O'DAY,
Chairman, Committee for the
Implementation of Textile Agreements.

---

[1] The term "adjustment" refers to those provisions of the Bilateral Cotton, Wool and Man-Made Fiber Textile Agreement of August 7 and 8, 1979, between the Governments of the United States and the Dominican Republic which provide, in part, that: (1) Specific levels of restraint may be exceeded by designated percentages to account for swing; (2) these levels may also be increased for carryover and carryforward up to 11 percent of the applicable category limit; and (3) administrative arrangements or adjustments may be made to resolve minor problems arising in the implementation of the agreement.

[2] The level of restraint has not been adjusted to reflect any imports after May 31, 1979.

Decisions of the United States Court of Customs and Patent Appeals

(C.A.D. 1243)

UNITED STATES, APPELLANT *v.* TEXAS INSTRUMENTS INC., APPELLEE

No. 79-32

1. CLASSIFICATION OF IMPORTS—VISIBLE LIGHT EMITTING DIODE (VLED) DISPLAY DEVICES TSUS ITEM 685.70

Customs Court decision that visible light emitting diode displays used in solid state watches are properly classified under TSUS item 685.70 as electrical indicator panels or electrical visual signalling apparatus rather than as watch dials under TSUS item 720.40 is affirmed.

2. ID.

Classification as watch dials is improper because Subpart E, Headnote 1 requires the watches in which the articles are used contain watch movements.

U.S. Court of Customs and Patent Appeals, April 17, 1980

Appeal from U.S. Customs Court, C.D. 4811 (Appeal No. 79-33), C.D. 4810 Appeal No. 79-32)

[Affirmed.]

Alice Daniel, Assistant Attorney General, *David M. Cohen*, Director, Commercial Litigation Branch, *Sheila N. Ziff*, attorney of record, for appellee, *Frederick L. Ikenson*, Attorney for appellee.

Henry C. Ikenberry and *Gary N. Horlick* (Steptoe and Johnson) attorneys for Tally Industries, Amicus Curiae.

James F. Davis, *John F. Bruce* and *Frederick H. Graefe* (Howrey & Simon) attorneys for Timex Corporation, Amicus Curiae.

Ive Arlington Swan, Attorney General of the Virgin Islands and *William L. Blum*, Legal Counsel to the Virgin Islands, Dept. of Commerce attorneys for Government of the Virgin Islands, Amicus Curiae.

Eugene A. Ludwig (Covington & Burling) attorney of record for American Watch Association, Amicus Curiae.

Louis Schneider and *Herbert Peter Larsen* (Freeman, Meade, Wasserman and Schneider) attorneys for General Electric Co., Amicus Curiae.

Before MARKEY, *Chief Judge*, RICH, BALDWIN, and MILLER, *Associate Judges*, and FORD,[1] *Judge*.

MARKEY, Chief Judge.

[1] The Government appeals from the judgment of the Customs Court, *Texas Instruments, Inc.* v. *United States*, 82 Cust. Ct. 287, C.D. 4811, 475 F. Supp. 1193 (1979), sustaining Texas Instruments' classification protest relating to imported visible light emitting diode (VLED) display devices used as components in solid-state digital watches. Judge Nils A. Boe held classification under item 685.70,[2] "electrical indicator panels or electrical visual signaling apparatus," to be proper. We affirm.

BACKGROUND

The imported articles, entered from Taiwan in June 1976, are VLED display devices used in solid-state electronic watches to display time in digital form. The Customs Service classified them as "watch dials" under TSUS item 720.40.[3]

The Customs Court held: (1) The articles cannot be classified as watch dials because the watches in which they are used do not contain a watch or clock movement, as required by schedule 7, part 2, subpart E, headnote 1; (2) that the articles are used in watches does not dictate that this VLED display be classified differently from all other VLED displays, the latter being classified under item 685.70.[4]

OPINION

[2] We agree with the Customs Court that classification under item 720.40 is improper because the watches in which the articles are used do not contain a watch or clock movement as required by subpart E, headnote 1, and that use of the imported article with watches did not require classification different from other VLED displays.

---

[1] The Honorable Morgan Ford, Judge, U.S. Customs Court, sitting by designation.

[2] Item 685.70 Bells, sirens, indicator panels, burglar and fire alarms, and other sound or visual signaling apparatus, all the foregoing which are electrical, and parts thereof. 4% ad val.

* * * * * * *

[3] Schedule 7, part 2, subpart E subpart E headnotes:

1. This subpart covers watches and clocks, time switches and other timing apparatus with clock of watch movements, and parts of these articles.

* * * * * * *

Dials and parts thereof:

Watch and clock dials:

720.40 Under 1.77 inches in width..... 1.2¢ each + 22.5% ad val.

[4] The Customs Court also expressed the view that the basic identifying characteristic of a watch or clock dial is the presence of graduations from which the passage of time can be ascertained. We need not and do not so determine.

The parties stipulated that if classification under item 720.40 were improper, the articles should be classified under item 685.70.[5]

The judgment of the Customs Court is affirmed.

(C.A.D. 1244)

THE UNITED STATES APPELLANT, *v.* TEXAS INSTRUMENTS INCORPORATED, APPELLEE

No. 79–33

1. CLASSIFICATION OF IMPORTS—ENCAPSULATED INTEGRATED CIRCUITS—TSUS ITEM 687.60

Customs Court decision that encapsulated integrated circuits used in solid states watches are properly classified as transistors and other related electronic crystal components under TSUS item 687.60 rather than subassemblies for watch movements under TSUS item 720.75 is affirmed.

2. ID.—CONGRESSIONAL INTENT "WATCH MOVEMENTS"

Legislative history showing a congressional intent to classify electronically regulated watch movements with conventional movements does not persuasively show that a solid-state module having no moving parts was intended by Congress to be included included within the provision for watch movements.

3. ID.

"Watch movements" refers to a mechanism incorporating moving parts to which or from which motion is transferred.

4. ID.

The vibration of the quartz crystal in a solid state digital watch module does not require classification of the module as a "watch movement."

5. ID.

An encapsulated integrated circuit used in solid state watches is not classifiable as a "clock mechanism" for the same reasons it is not classifiable as a "watch movement."

U.S. Court of Customs and Patent Appeals, April 17, 1980

Appeal from U.S. Customs Court, C.D. 4811 (Appeal No. 79–33) C.D. 4810 (Appeal No. 79–32)

[Affirmed.]

---

[5] In *United States* v. *Texas Instruments*, —— CCPA ——, C.A.D. 1244, —— F. 2d —— (1980), decided of even date, this court affirmed the Customs Court decision that integrated circuit devices are not parts of watch or clock movements, because they contain no mechanism for the transfer of motion.

Alice Daniel, Assistant Attorney General, *David M. Cohen*, Director, Commercial Litigation Branch, *Shelia G. Ziff*, attorney of record, for appellant.

Frederick L. Ikenson, Attorney for appellee.

Henry C. Ikenberry and *Gary N. Horlick* (Steptoe and Johnson) attorneys for Tally Industries, Amicus Curiae.

James F. Davis, *John F. Bruce* and *Frederick H. Graefe* (Howrey & Simon) attorneys for Timex Corporation, Amicus Curiae.

Ive Arlington Swan, Attorney General of the Virgin Islands and *William L. Blum*, Legal Counsel to the Virgin Islands Dept. of Commerce attorneys for Government of the Virgin Islands, Amicus Curiae.

Eugene A. Ludwig, (Covington & Burling) attorney of record for American Watch Association, Amicus Curiae.

Louis Schneider and *Herbert Peter Larsen*, (Freeman, Meade, Wasserman and Schneider,) attorneys for General Electric Co., Amicus Curiae.

Before MARKEY, *Chief Judge*, RICH, BALDWIN, and MILLER, *Associate Judges*, and FORD[1], *Judge*, U.S. Customs Court.

MARKEY, Chief Judge.

[1] The Government appeals from the judgment of the Customs Court, *Texas Instruments, Inc.* v. *United States*, 82 Cust. Ct. 272, C.D. 4810, 475 F. Supp. 1183 (1979), sustaining Texas Instruments' classification protest relating to imported integrated circuit devices used as components in solid-state digital watches.[2] We affirm.

BACKGROUND

The imported articles, entered from El Salvador in August 1976, are integrated circuit devices, each of which is affixed to a lead frame and encapsulated in molded plastic material shaped to facilitate addition of other components required to complete a digital watch module, i.e., crystal, capacitor, batteries, and display.

The Customs Service classified the imported articles under TSUS item 720.75[3] as assemblies and subassemblies for watch movements.

[1] The Honorable Morgan Ford, Judge, U.S. Customs Court, sitting by designation.

[2] Briefs amicus curiae were filed by American Watch Association, General Electric Co., Government of the Virgin Islands, Talley Industries, and Timex Corp.

[3] Assemblies and subassemblies for watch movements consisting of 2 or more parts or pieces fastened or joined together:

*	*	*	*	*	*	*
720.75	Other assemblies and subassemblies					4.5¢ for each jewel (if any)+the column 1 rate specified in item 720.65 for bottom or pillar plates or their equivalent therein . . . but the total duty on the assembly or subassembly shall not . . . be less than 22.5% ad val. . . .

318-660 O - 80 - 2

Texas Instruments claimed classification under TSUS item 687.60.[4] The Government asserted an alternate classification under TSUS item 720.86 [5] as assemblies and subassemblies for clock movements.

Judge Nils A. Boe held: (1) The legislative history of TSUS item 720.75 does not evidence a congressional intent to include every device capable of measuring time within the meaning of "watch movement"; (2) "watch movement" refers to a mechanism possessing moving parts to which or from which motion is transferred; (3) the molecular vibration within the quartz crystal of an electronic watch module does not satisfy that motion requirement; (4) the imported articles do not bear an essential resemblance to watch movements, and are specifically provided for under TSUS item 687.60; (5) the imported articles are not more than integrated circuits; and (6) the imported articles are not classifiable as "clock movements" under TSUS item 720.86, the sole distinction between clock and watch movements being size.

Issue

The dispositive issue is whether the Customs Court erred in holding the articles properly classified under TSUS item 687.60 as transistor and other related electronic crystal components rather than as subassemblies for watch or clock movements.

Opinion

The Government argues the Customs Court erred because: (1) Legislative history shows a congressional intent to include electronic movements within the term "watch movements"; (2) the quartz crystal incorporated into the imported articles after importation provides movement; (3) the imported articles bear an essential resemblance to watch movement subassemblies in existence when the TSUS was enacted; (4) the articles are more than integrated cir-

[4] Electronic tubes (except X-ray tubes): photocells; transistors; and other related electronic crystal components; mounted piezoelectric crystals; all the foregoing and parts thereof:

* * * * * * *

687.60	Other	6% ad val.

[5] Assemblies and subassemblies for clock movements, consisting of 2 or more parts or pieces fastened or joined together:

* * * * * * *

Other assemblies and subassemblies:

* * * * * * *

720.86	For other movements	16% ad val.+ 6.25¢ for each jewel (if any)+ 0.75¢ for each other piece or part.

cuits; and (5) if the articles are not watch movements, they are clock movements.

(1) Legislative History

[2] The Government cites portions of the Tariff Classification Study and the Congressional Record that indicate a congressional intent that electronically regulated movements be classified with conventional movements. Those citations do not, however, persuasively show that a solid-state module having no moving parts was intended by Congress to be included within the provision for "watch movements." [6] Accordingly, the Customs Court properly determined the meaning of the term "watch movements" by reference to texts and dictionaries in use at the time the TSUS was enacted, the common understanding of the term in the horological industry at that time, and the testimony of experts as to what the term meant when the TSUS was enacted. The conclusion of the Customs Court that the term refers to a mechanism incorporating "moving parts to which or from which motion is transferred," 82 Cust. Ct. at 278, 474 F. Supp. at 1187, has not been shown to be erroneous by the Government. **[3]** We agree with the Customs Court that the term requires a mechanism for the transfer of motion. Indeed, until 1972, every watch sold contained a movement meeting that definition. Electronically regulated watch movements, the subject of much discussion when the TSUS were enacted (and of the legislative history cited by the Government), also have moving parts and thus meet that definition. The Customs Court correctly decided that the articles at issue here, having no mechanism for the transfer of motion, were not "movements" or subassemblies of "movements" within the meaning of that term as it was understood in 1962.

(2) Quartz Crystal Motion

The Government argues that even if motion is required by the definition of watch movement, that requirement is satisfied by the vibration of the quartz crystal later incorporated into the imported articles. We do not accept that contention. **[4]** The magnitude of the motion within the crystal is roughly one angstrom (one ten-billionth of a meter); the motion is essentially molecular vibration; and the motion does not transmit mechanical energy or transfer motion to or from any other part.

---

[6] Congress rejected an attempt to amend the relevant TSUS items in 1975 and 1976 to include components of solid-state watches under the TSUS provisions for watches. H.R. 10176, 94th Cong., 1st sess. (1975); H.R. 14800, 94th Cong., 2d sess. (1976).

(3) *Essential Resemblance*

The Government argues that the imported articles bear an essential resemblance to subassemblies for watch movements in existence when the TSUS were enacted and thus should be classified with them. That argument is supported by a functional analysis: because the imported articles and prior subassemblies are used to keep time and meet certain dimensional requirements, they should be classified together.

The required essential resemblance is to those characteristics established by the TSUS as the criteria of classification. *Davies Turner & Co.* v. *United States*, 45 CCPA 39, 41–42, C.A.D. 669 (1957). The criteria established by the TSUS for classification as a watch movement are: (1) A timepiece movement, (2) less than 1.77 inches wide and 0.5 inch thick. Though the dimensional requirements are met by the imported article, it does not bear an essential resemblance to a timepiece movement because the imported article is not and does not contain a movement. We agree with the Customs Court that the articles are more specifically provided for as transistors and other related electronic crystal components.

(4) "More Than" Integrated Circuits

Arguing that the imported articles are more than integrated circuits, the Government says classification in a TSUS item for integrated circuits is improper because: (1) The encapsulation material serves as a housing for other components; (2) the lead frame serves as the device's substrate; and (2) not at all the usable terminals are connected to external leads.

"Only the most general of rules can be ascertained from the previous decisions dealing with the 'more than' doctrine, and it appears that each case must in the first analysis be determined on its own facts." *E. Green & Son (New York), Inc.* v. *United States*, 59 CCPA 31, 34, C.A.D. 1032, 450 F.2d 1396, 1938 (1971). This court will not reverse on questions of fact unless the findings are unsupported by substantial evidence or are clearly contrary to the weight of the evidence. *Pollard Bearings Corp.* v. *United States*, 62 CCPA 61, 64, C.A.D. 1146, 511 F.2d 568, 571 (1975); *United States* v. *F. W. Myers & Co.*, 45 CCPA 48, 52, C.A.D. 671 (1958).

The Customs Court's finding that the articles are not more than integrated circuits is fully supported by the evidence. We agree with the Customs Court that the features the Government points to are subordinate to the articles' use as integrated circuits.

(5) *Clock Movement*

The Government argues that if the articles are not classifiable as watch movements they are classifiable as "clock movements or mechanisms" under TSUS item 720.86, because schedule 7, part 2, subpart E, headnote 2(c), says for the purpose of subpart E: "The term 'clock movements' means any movement or mechanism, other than 'watch movements' as defined in headnote 2(b), above, intended or suitable for measuring time." That language, says the Government, requires that any timekeeping device not meeting the dimensional and physical requirements of "watch movement" be classified as a "clock movement or mechanism."

That argument turns on the meaning of "mechanism" at the time the TSUS were enacted. That meaning is of a breadth insufficient to encompass a solid-state module having no moving parts. Webster's Third New International Dictionary (1961) defines mechanism as "a piece of machinery: a structure of working parts functioning together to produce an effect," with machine defined as "(a)ny device consisting of two or more * * * parts, which * * * may serve to transmit and modify force and motion * * *." That that meaning has long been accepted is evidenced by Lockwood's Dictionary of Mechanical Engineering Terms (1913), defining mechanism as "an assemblage of parts * * * which embraces the essential principles on which the machine is constructed," and "machine" "an assemblage of parts * * * by which motion and force are transmitted."

[5] The integrated circuit before us is not a subassembly of a mechanism for the same reason it is not a subassembly of a movement: there is simply no physical movement or motion generated in or by the circuit.

Summary

The judgment of the Customs Court, that encapsulated integrated circuits, used in solid state watches, are properly classified as transistors and other related electronic crystal components rather than subassemblies for watch movements, is affirmed.

Decisions of the United States Customs Court

United States Customs Court

One Federal Plaza
New York, N.Y. 10007

Chief Judge

Edward D. Re

Judges

Paul P. Rao
Morgan Ford
Scovel Richardson
Frederick Landis
James L. Watson
Herbert N. Maletz
Bernard Newman
Nils A. Boe

Senior Judge

Samuel M. Rosenstein

Clerk

Joseph E. Lombardi

Abstracts

Abstracted Protest Decisions

DEPARTMENT OF THE TREASURY, *April 14, 1980.*

The following abstracts of decisions of the United States Customs Court at New York are published for the information and guidance of officers of the Customs and others concerned. Although the decisions are not of sufficient general interest to print in full, the summary herein given will be of assistance to Customs officials in easily locating case and tracing important facts.

ROBERT E. CHASEN,
Commissioner of Customs.

DECISION NUMBER	JUDGE & DATE OF DECISION	PLAINTIFF	COURT NO.	ASSESSED	HELD	BASIS	PORT OF ENTRY AND MERCHANDISE
				Par. or Item No. and Rate	Par. or Item No. and Rate		
P80/54	Ford, J. April 7, 1980	Camp Ways, Inc.	77-6-00899	Item 380.84 25¢ per lb. + 27.5%	Item 376.56 16.5%	H. Rosenthal Co. v. U.S. (C.D. 4769, aff'd C.A.D. 1236)	Los Angeles Ponchos of man-made fibers
P80/55	Richardson, J. April 7, 1980	Kombi Ltd.	79-8-01347	Item 734.99 9%	Item A734.99 Free of duty pursuant to GSP by virtue of Ex. Order No. 11888 of 11/24/75	Agreed statement of facts	Newark (New York) Ski gloves, etc.; products of eligible beneficiary country
P80/56	Richardson, J. April 10, 1980	Amico, Inc.	78-8-01527	Item 737.20 17.5%	Item 688.40 5.5%	Agreed statement of facts	Philadelphia "Sexy Doll Radios"; human figurine incorporating a radio as an integral part
P80/57	Watson, J. April 10, 1980	S. S. Kresge Co.	77-12-04952	Item 389.60 or 389.62 25¢ per lb. plus 15%	Item 735.20 10%	The Newman Importing Co., Inc. v. U.S. (C.D. 4648)	Longview (Portland, Oreg.) Tents

Decisions of the United States Customs Court

Abstracts

Abstracted Reappraisement Decisions

DECISION NUMBER	JUDGE & DATE OF DECISION	PLAINTIFF	COURT NO.	BASIS OF VALUATION	HELD VALUE	BASIS	PORT OF ENTRY AND MERCHANDISE
R80/102	Richardson, J. April 7, 1980	Conti Rubber Products Inc.	76-12-02781, etc.	Foreign value	DM88.176, DM52.866, DM65.406, DM63.492, DM64.35	Agreed statement of facts	Los Angeles Various automotive tires
R80/103	Richardson, J. April 7, 1980	Gehrig, Hoban & Co., Inc.	R68/14826	United States value	Determined by adding to f.o.b. unit invoice price in Swiss francs converted to a dollar value at the rate of exchange in effect at time of entry (the "claimed value"), 53% of difference between claimed value and appraised value	Agreed statement of facts	New York Machine tools and accessories and parts thereof
R80/104	Boe, J. April 7, 1980	J. E. Bernard & Company, Inc.	R68/2607	Export value	Invoice value of SFR 45,000, plus US $30,000 for license fee, net, packed	Agreed statement of facts	Chicago "One Special Camera (camera with two stands complete)"

R80/105	Richardson, J. April 10, 1980	Conti Rubber Products Inc.	76-5-01134, etc.	Foreign value	DM35.046; DM56.628; DM38.478; DM64.614; DM37.488; DM41.184	Agreed statement of facts	Boston Automotive tires
R80/106	Richardson, J. April 10, 1980	Frank P. Dow Co., Inc.	R69/1707, etc.	United States value	Determined by adding to f.o.b. unit invoice price in Swiss francs converted to a dollar value at rate of exchange in effect at time of entry (the "claimed value"), 53% of difference between claimed value and appraised value	Agreed statement of facts	San Francisco Machine tools and accessories and parts thereof

Appeals to U.S. Court of Customs and Patent Appeals

APPEAL 80-25.—Majestic Electronics, Inc. *v.* United States.—WIGS AND OTHER HAIR PRODUCTS—EXPORT VALUE—APPEALS FOR REAPPRAISEMENT DISMISSED. Appeal from C.D. 4839.

In this case merchandise consisting of wigs and other products of human hair was, based on the price of "such or similar" merchandise, appraised on the basis of export value as defined in section 402(b) of the Tariff Act of 1930, as amended by the Customs Simplification Act of 1956 (19 U.S.C. 1401a(b)), at unit values higher than the invoice unit values, as entered. Plaintiff-appellant contended that the invoice unit values, as entered, represent the proper dutiable values.

Plaintiff claimed, alternatively, that if it was found to be a selected purchaser within the meaning of section 402(f), Tariff Act of 1930, as amended, the invoice unit values, as entered, represent the prices which fairly reflect the market value of the merchandise. Plaintiff was not found to be a selected purchaser.

The Customs Court determined that plaintiff had failed to overcome the presumption of correctness attaching to the appariser's findings of value as to certain of the merchandise (i.e., the first order of Italwigs, all orders of B/Italwigs, hand tied and machine made, and the Christina 500). The appraiser's findings of value to those items of merchandise were, therefore, affirmed. The Customs Court found that plaintiff had overcome the presumption of correctness attaching to the appraiser's findings of value as to the remaining merchandise (i.e., the Italwigs after the first order, the Roman wigs, the Wiglet "C", the Monica falls, and the Gioia wigs), but it failed to establish the correctness of its claimed values. Therefore, the appraised values as to those items of merchandise were not affirmed, but remain in effect. The appeals for reappraisement were dismissed.

It is claimed that the Customs Court erred in finding and holding that plaintiff failed to overcome the presumption of correctness attaching to the appraiser's findings of value as to the first order of Italwigs in entry 107666, and as to all orders of the hand-tied B/Italwigs, the machine-made B/Italwigs, and the Christina 500; in finding and hold-

ing that, although plaintiff overcame the presumption of correctness attaching to the appraiser's findings of value as to the Roman wigs, the Wiglet "C", the Monica falls, the Gioia wigs and all Italwigs except those in entry 107666, plaintiff failed to establish that the export value was represented by the invoiced and entered values of said merchandise; in not finding and holding that the export value of all merchandise included in the consolidated appeals was represented by the invoiced and entered values; in finding and holding that export value may not be established by prices negotiated in bona fide arm's-length transactions if the buyer is not a selected purchaser; in not finding and holding that export value may be established by prices negotiated in bona fide arm's-length transactions, regardless of whether the buyer is a selected purchaser; in finding and holding that plaintiff was not a selected purchaser at wholesale within the meaning of section 402(f)(1)(B) of the Tariff Act of 1930, as amended; in not finding and holding that plaintiff, the purchaser of wigs and other hair products made to its own specifications, was in fact a selected purchaser under section 402(f)(1)(B); in not finding and holding whether or not plaintiff was a selected purchaser, the prices negotiated at arm's length should nevertheless be accepted as representing the market value and export value of the imported merchandise; in failing to hold that sales of merchandise made to specification, to anyone other than the selected purchaser who placed the order and supplied the specifications are not in the ordinary course of trade and should be disregarded in determining export value.

APPEAL 80–27.—Norman G. Jensen, Inc., a/c Calhoun's Collectors Society, Inc. *v.* United States—STAFFA STAMPS—ARTICLES OF GOLD—POSTAGE STAMPS—PRINTED MATTER—PRESSURE SENSITIVE FLAT STRIPS OR FORMS—GOLD LEAF, MOUNTED—TSUS. Appeal from C.D. 4846.

In this case the merchandise, thin rectangular strips approximately 1½ inches in width by 2 inches in length backed with an adhesive coating and protected by a release paper, was held properly classified and assessed under item 656.10 of the Tariff Schedules of the United States as articles of gold with duty at the rate of 20 percent ad valorem. The merchandise (Staffa stamps) is produced and sold by private parties and bears the name of the small uninhabited, privately owned island of Staffa located approximately 7.8 nautical miles off the coast of Scotland. Tourists can purchase the Staffa stamps on a ferry trip to the island. A private carrier transports cards or letters bearing the stamps to the mainland where a British postage stamp is affixed.

The letters or cards are then deposited in an official British Post Office for transmission to respective designated destinations.

Plaintiff-appellant claimed that the merchandise was properly free of duty under item 274.40, TSUS, as postage stamps, or, in the alternative, that it was properly classifiable under item 274.70 as printed matter at 4 percent ad valorem, or as printed matter not specially provided for under item 274.90 at 7.5 percent, or as pressure sensitive flat strips or forms under item 790.55 at 10 percent, or as gold leaf, mounted, under item 644.52 at 3.37 cents per 100 square inches plus 12.5 percent.

It is claimed that the Customs Court erred in finding that "plaintiff assumes that the establishment of a specific philatelic meaning of the term 'postage stamps' ipso facto, causes that meaning to be the common meaning thereof" and in failing to find that the philatelic meaning was relevant to the statutory meaning; in not finding that the articles in issue were known to philatelic dealers and those in the philatelic world as postage stamps; in holding by way of limitation, that the first of two prerequisites of the statutory term "postage stamps" is "(1) its issuance or specific authorization by a government * * *"; in not finding, in accordance with the preponderance of evidence, that the private local stamps at bar were within the common understanding of the term "postage stamps"; in failing to find and to hold, in accordance with the evidence, that treatises, catalogs and dictionaries defined "postage stamps" without reference to government issue; in failing to find that defendant's key witness Lutz agreed with plaintiff's testimony that private local stamps were within the trade definition of "postage stamps"; in finding, from a review of The Summaries of Trade and Tariff Information, by the U.S. Tariff Commission, that the term "postage stamps" was limited to stamps "printed by or for a national government"; in holding that "the philatelist may enjoy the gratuity of a tariff exemption only if the stamps imported for philatelic purposes" were printed by or for the use of a national government for postage purposes; in holding, in substance, that plaintiff's witness, L. N. Williams, distinguished private local postage stamps from "postage stamps"; in finding and holding, contrary to the evidence, that recognized authoritative standard postage stamp catalogs do not include private local issues for the reasons that they are not valid as postage stamps; in not finding that some recognized postage stamp catalogs do list private local postage stamps and specifically these Staffa stamps; in holding, in substance, that the opinions of plaintiff's witness Williams that the stamps at issue are "postage stamps" were lacking in credibility because of allegedly inconsistent earlier writings of said witness con-

cerning other stamps, not in issue; in holding, in respect of plaintiff's contention that the articles were "printed matter" that it is not the function of the court to determine the meaning of the term "printing" in the printing trade; in finding that neither a visual examination of the Staffa stamp nor the relevant evidence permits the conclusion that the essential character of the article is imparted by the textual and pictorial matter therein; in finding, contrary to any testimonial evidence, that the essential character of the merchandise is that it is gold having an excellent investment potential; in not finding that the exhibits, as well as the testimonial evidence, established that the essential character of the articles was as printed matter; in not holding that plaintiff's said evidence was uncontradicted and unimpeached; in holding that the merchandise was not printed matter notwithstanding its finding that printed and pictorial matter was embossed thereon; in finding and holding that the surface of the Staffa stamp is not flat within the intendment of part 13, subpart A of schedule 7 and in not finding and holding to the contrary; in not finding and holding that the articles at bar were flat shapes similar to the named exemplaries in said item 790.55; in not finding and holding that the merchandise at bar was gold leaf, mounted, as described in item 644.52; in not rendering judgment sustaining plaintiff's claim for classification as postage stamps under item 274.40, or, in the alternative, for classification as printed matter under item 274.70 at 4 percent ad valorem or in the alternative, as printed matter not specially provided for under item 274.90 at 7.5 percent ad valorem or, in the alternative, as pressure sensitive flat strips or forms under item 790.55 at 10 percent ad valorem or, in the alternative, as gold leaf, mounted under item 644.52 at 3.37 cents per 100 square inches plus 12.5 percent ad valorem; in sustaining the classification of the merchandise as articles of gold under item 656.10.

Recent Unpublished Customs Service Decisions

The following listing of recent administrative decisions issued by the Office of Regulations and Rulings, U.S. Customs Service, and not otherwise published, is published for the information of Customs officers and the importing community. Although the decisions are not of sufficient general interest to warrant publication as Treasury decisions, the listing describes the issues involved and is intended to aid Customs officers and concerned members of the public in identifying matters of interest which recently have been considered by the Office of Regulations and Rulings.

A copy of any decision included in this listing, identified by its date and file number, may be obtained in a form appropriate for public distribution upon written request to the Office of Regulations and Rulings attention: Legal Reference Area, room 2404, U.S. Customs Service, 1301 Constitution Avenue NW., Washington, D.C. 20229. These copies will be made available at a cost to the requester of $0.10 per page. However, the Customs Service will waive this charge if the total number of pages copied is 10 or less.

Decisions listed in earlier issues of the CUSTOMS BULLETIN, through December 21, 1979, are available in microfiche format at a cost of $17.70 (15 cents per sheet of fiche). It is anticipated that additions to the microfiche will be made quarterly and subscriptions are available. Requests for the microfiche now available and for subscriptions should be directed to the Legal Reference Area. Subscribers will automatically receive updates as they are issued and will be billed accordingly.

Dated: April 22, 1980.

JOHN T. ROTH,
Acting Director,
Regulations and Research Division.

Date of Decision	File Number	Issue
3-27-80	104505	Vessels: Definition of passengers to be used for computing tonnage tax for vessels
3-20-80	712210	Country-of-origin marking: Surfboards

Date of Decision	File Number	Issue
3-19-80	712404	Country-of-origin marking: Exception: grey iron casting washers
3-21-80	712458	Country-of-origin marking: Sewing machines
3-27-80	712529	Country-of-origin marking: Plastic housings for use in domestic assembly of depth sounders
3-20-80	712612	Entry: Personal effects of military personnel (820.40, 822.20)
3-21-80	712683	Entry: Whether misunderstanding between broker and trucking company as to when the latter should obtain release of merchandise from Customs custody is a mistake of fact under 19 U.S.C. 1520(c)(1)
3-20-80	057121	Classification: Multiple sprocket for bicycle (912.10)
3-26-80	060994	Classification: Flat door jambs of wood with stops attached (202.64, 202.66)
3-24-80	061266	Classification: Cowhide gloves (735.07, 735.35)
3-26-80	061564	American selling price: Women's closed-toe, open-back, acrylic plush scuff with vinyl wedge
3-20-80	061648	Classification: Gumball machines (654.11, 678.50)
3-26-80	061649	Classification: Metal key chains (657.25, 740.38)
3-25-80	061756	Classification: Disguise kits (737.65, 737.95)
3-24-80	061761	Classification: Papermaking machinery parts (661.06, 661.10, 661.67, 661.68)
3-14-80	061845	Classification: Steel tubing (610.52, 664.05)
3-25-80	061889	Classification: Precious metal balls used in fountain pen nibs (656.05, 760.32)
3-28-80	061924	Classification: Modular trailer (692.32, 692.60)
3- 5-80	062667	Classification: Clown pompon figures (737.40)
3-12-80	062781	Classification: Tension knob (772.80)
3-28-80	062837	Classification: Textile finishing and coating machines (664.10, 670.43)
3- 5-80	062871	Classification: Grafting machine (666. 00)
3-12-80	164072	Classification: Folding aluminum ladders (657. 40)
3-25-80	064100	Classification: Whether garments with embroidered trade name are ornamented
3-13-80	064158	Classification: combination electric shaver and hair dryer (683. 50, 684. 50, 678. 50)
2- 8-80	064220	Classification: Friction welder (678. 50, 683. 90)
3-28-80	064311	Classification: Whether a label ornaments a certain garment
3-24-80	064375	Classification: Snowblower (661. 06, 870. 40)
3- 5-80	064392	Classification: Solar energy absorbers (657. 40, 661. 65)
3-20-80	064398	Classification: Shoe chain (652. 24)
3-12-80	064400	Classification: Hot-rolled, rough-turned steel bars (606. -83, 606. 88)
3-12-80	064401	Classification: head meat and tongues of sheep and calves (106. 80, 106. 85)
3-20-80	064513	Classification: Construction of civil aircraft agreement

International Trade Commission Notices

Investigations by the U.S. International Trade Commission

DEPARTMENT OF THE TREASURY

The appended notices relating to investigations by the U.S. International Trade Commission are published for the information of Customs Officers and others concerned.

R. E. CHASEN,
Commissioner of Customs.

(19 CFR 210.54)

AGENCY: U.S. International Trade Commission.

ACTION: Section 210.54 of the U.S. International Trade Commission's Rules of Practice and Procedure is amended to read as follows:

210.54 Filing of Exceptions to the Recommended Determination and Alternative Findings of Fact and Conclusions of Law.

Except as otherwise authorized by the Commission, the parties shall be allowed 10 days from the date of service of the recommended determination to file exceptions to the recommended determination and alternative findings of fact and conclusions of law with the Commission. All exceptions and alternative findings of fact and conclusions of law shall be concisely supported by references to the record and the law relied upon. The Commission may rule upon motions for extension of time to file exceptions ex parte.

EFFECTIVE DATE: Upon publication in the Federal Register.

FOR FURTHER INFORMATION CONTACT: N. Tim Yaworski, Esq., Office of the General Counsel, U.S. International Trade Commission, 701 E Street NW., Washington, D.C., telephone 202-523-0311.

SUPPLEMENTARY INFORMATION: Part 210 of the commission's Rules of Practice and Procedure contains rules for the conduct of investigations of alleged unfair practices in the import trade. The

Commission conducts such investigations pursuant to section 337 of the Tariff Act of 1930, as amended (19 U.S.C. 1337). Commission Rule 210.54 concerns the filing of (1) exceptions to the presiding officer's recommended determination, and (2) alternative findings of fact and conclusions of law. The Commission is amending rule 210.54 to make clear that motions for extensions of time in which to file exceptions to the recommended determination and alternative findings of fact and conclusions of law will be ruled upon by the Commission. The amended rule also provides that such motions may be ruled upon by the Commission on an ex parte basis.

By order of the Commission:
Issued: April 15, 1980.

KENNETH R. MASON,
Secretary.

In the Matter of CERTAIN HEADBOXES AND PAPERMAKING MACHINE FORMING SECTIONS FOR THE CONTINUOUS PRODUCTION OF PAPER, AND COMPONENTS THEREOF	Investigation No. 337-TA-82

Order No. 1

Pursuant to my authority as Chief Administrative Law Judge of this Commission, I hereby designate Administrative Law Judge Donald K. Duvall as Presiding Officer in this investigation.

The Secretary shall serve a copy of this order upon all parties of record and shall publish it in the Federal Register.

Issued: April 11, 1980.

DONALD K. DUVALL,
Chief Administrative Law Judge.

TA-131(b)-4

LIST OF ARTICLES WHICH MAY BE CONSIDERED FOR INTERNATIONAL TRADE NEGOTIATIONS

Notice of Investigation and Hearing

The U.S. Trade Representative (USTR), acting pursuant to the authority delegated to him by the President, Executive Order 11846,

as amended by Executive Order 11947) and in conformity with section 131 of the Trade Act of 1974 (19 U.S.C. 2151), gave notice on April 7, 1980 (45 F.R. 23558), of articles that may be considered for modification or continuance of U.S. duties or for additional duties.

The USTR has requested the Commission to furnish its advice pursuant to section 131 of the Trade Act as to the probable economic effects on producers of like or directly competitive products and on consumers, of increases in the current duty rates for certain listed items.

The list, annotated with the current rates of duty for each listed article and the maximum rates of duty which may be imposed on such articles under authority of section 124 and section 101(c) of the Trade Act is published as an annex to this notice. The current rates of duty shown in rate columns numbered 1 and 2 are the same as the rates in effect as of January 1, 1975.

Investigations

In accordance with the request of the USTR and the provisions of sections 124 and 131 of the Trade Act, the Commission, on April 14, 1980, instituted investigation TA-131(b)-4 for the purposes of obtaining, to the extent practicable, information of the kind described in section 131(d) of the Trade Act for use in connection with the preparation of the advice requested by the USTR.

Hearing

A public hearing in connection with the investigation will be held in the Commission Hearing Room, 701 E Street NW., Washington, D.C. 20436, beginning at 10 a.m., e.d.t. on Wednesday, May 14, 1980. All interested persons will be given an opportunity to be present, to produce evidence, and to be heard at the hearing. Requests to appear at the public hearing should be addressed to the Secretary at the Commission's office in Washington, D.C., and should be received not later than noon of the fifth calendar day preceding the hearing.

Written submissions

In lieu of or in addition to appearing at the public hearing, interested persons may submit written statements. Any business information which a submitter desires the Commission to treat as confidential shall be submitted on separate sheets, each clearly marked at the top "Confidential business data." Confidential submissions must conform with the requirements of section 201.6 of the Commission's Rules of Practice and Procedure (19 CFR 201.6). All written submissions, except for confidential business data, will be made available for inspection by interested persons. To be ensured of consideration by the Commission, written statements should be submitted at the

earliest practicable date, but no later than May 19, 1980. All submissions should be addressed to the Secretary at the Commission's office in Washington, D.C.

Report

At the completion of this investigation, the Commission will transmit its report to the USTR. The Commission expects to transmit to the USTR by June 16, 1980.

By order of the Commission:

Issued: April 15, 1980.

KENNETH R. MASON,
Secretary.

Attachment.

ANNEX

GSP	TSUS item No. [1]	Article description	Rates of duty— Col. 1	Col. 2	Maximum increase permissible [2]
A	----------	Vegetables, fresh, chilled, or frozen (but not reduced in size nor otherwise prepared or preserved):			
	135.92	Cucumbers, if entered during the period from March 1 to June 30, inclusive, or the period from September 1 to November 30, inclusive in any year.	3¢ per lb.	3¢ per lb.	4.5¢ per lb., or 3¢ per lb. + 20% ad val., whichever is higher.
	135.94	Cucumbers, if entered during the period from July 1 to August 31, inclusive, in any year.	1.5¢ per lb.	3¢ per lb.	4.5¢ per lb., or 1.5¢ per lb. + 20% ad val., whichever is higher.
	136.22	Eggplant, if entered during the period from December 1 in any year to the last day of the following March, inclusive.	1.1¢ per lb.	1.5¢ per lb.	2.25¢ per lb., or 1.1¢ per lb. + 20% ad val., whichever is higher.

[1] Tariff Schedules of the United States. The Tariff Schedules of the United States Annotated (1980) is for sale by the Superintendent of Documents, Government Printing Office, Washington, D.C. 20402; it is also available for inspection without charge at any field office of the U.S. Customs Service or the Department of Commerce and at depository libraries.

[2] Sec. 101(c) of the Trade Act of 1974 provides as follows: (c) No proclamation shall be made pursuant to subsection (a)(2) increasing any rate of duty to, or imposing a rate above, the higher of the following: (1) the rate which is 50 percent above the rate set forth in rate column numbered 2 of the Tariff Schedules of the United States as in effect on Jan. 1, 1975, or (2) the rate which is 20 percent ad valorem above the rate existing on Jan. 1, 1975.

Current rates of duty are shown in rate columns numbered 1 and 2. Such rates are also the same as the rates in effect as of Jan. 1, 1975.

In the Matter of CERTAIN SURVEYING DEVICES	Investigation No. 337-TA-68

Notice and Order Concerning Procedure for Commission Determination and Action

Notice is hereby given that—

1. The Commission will hold a hearing beginning at 10 a.m., e.d.t., Wednesday, May 7, 1980, in the Commission Hearing Room, 701 E Street NW., Washington, D.C., for the purposes of (1) hearing oral argument on the recommended determination of the presiding officer concerning whether there is a violation of section 337 of the Tariff Act of 1930, as amended (19 U.S.C. 1337); and (2) receiving oral presentations with respect to the subject matter of section 210.14(a) of the Commission's Rules of Practice and Procedure (19 CFR 210.14(a)) concerning relief, bonding, and the public interest factors set forth in subsections (d) and (f) of section 337 of the Tariff Act of 1930, as amended (19 U.S.C. 1337), which factors the Commission is to consider in the event it determines that relief should be granted. The latter proceeding is legislative in character, and therefore the hearing on remedy, bonding, and public interest will not be subject to the requirements of 5 U.S.C. 556, 557. Instead, this phase of the hearing will be conducted in accordance with section 201.11 of the Commission's Rules of Practice and Procedure (19 CFR 201.11). These matters are all being heard on the same day in order that this investigation may be completed within the time limits prescribed by the statute and to minimize the burden of this hearing upon the parties.

Parties and agencies wishing to make oral argument with respect to the recommended determination shall be limited in each oral argument to not more than 30 minutes, 10 minutes of which may be reserved for rebuttal by the staff and complainant.

For that part of the hearing devoted to relief, bonding, and the public interest, parties, interested persons, and Government agencies will be limited in their presentations to no more than 15 minutes. Participants will be permitted an additional 5 minutes for closing arguments after all presentations have been concluded. The Commission's investigative staff will be allotted the full-time available to a party.

Requests for appearances at the hearing should be filed, in writing, with the Secretary of the Commission at his office in Washington no later than close of business, Friday, May 2, 1980. Requests should indicate the part of the hearing (i.e., with respect to the recommended determination, relief, bonding, the public interest factors, or any combination thereof) in which the requesting person desires to participate.

2. Written submissions from the parties, other interested persons, Government agencies and departments, governments, or the public with respect to the recommended determination and the subject matter of subsections (a)(1), (a)(2), and (a)(3) of section 210.14 of the Commission's Rules of Practice and Procedure (19 CFR 210.14(a) (1), (2), and (3)) concerning remedy, bonding, and the public interest will be considered if received by the Commission by Wednesday, May 21, 1980.

Notice of the Commission's institution of the investigation was published in the Federal Register of July 5, 1979 (44 F.R. 39315).

By order of the Commission.

Issued: April 17, 1980.

KENNETH R. MASON,
Secretary.

Index

U.S. Customs Service

	T.D. No.
Treasury decision:	
Bond: Carrier (Customs form 3587)	80-105
Cotton textile products-restriction on entry:	
Pakistan	80-106
Philippines	80-108
Dominican Republic	80-109
Wool and manmade fiber apparel products-restriction on entry:	
Yugoslavia	80-107
U.S. Court of Customs and Patent Appeals:	
United States v. Texas Instruments	1243
United States v. Texas Instruments	1244

Customs Court

Appeals to U.S. Court of Customs and Patent Appeals (p.—):

Appeals:

80-25—Wigs and other hair products; export value; appeals for reappraisement dismissed

80-27—Staffa stamps; articles of gold; postage stamps; printed matter; pressure sensitive flat strips or forms; gold leaf, mounted; TSUS

MAY 15 1980 Item 750-D T1.11/3:14/20
f contin

Customs Bulletin

Regulations, Rulings, Decisions, and Notices concerning Customs and related matters

and Decisions

of the United States Court of Customs and Patent Appeals and the United States Customs Court

318-661
350

Vol. 14 MAY 14, 1980 No. 20

9247

This issue contains

T.D. 80–110 and 80–118
Erratum
C.D. 4853
Protest abstracts P80/58 through P80/59
Reap. abstracts R80/107 through R80/115
International Trade Commission Notice

THE DEPARTMENT OF THE TREASURY
U.S. Customs Service

N.T.

NOTICE

The abstracts, rulings, and notices which are issued weekly by the U.S. Customs Service are subject to correction for typographical or other printing errors. Users may notify the U.S. Customs Service, Logistics Management Division, Washington, D.C. 20229, of any such errors in order that corrections may be made before the bound volumes are published.

For sale by the Superintendent of Documents, U.S. Government Printing Office, Washington, D.C. 20402. Price: $1.30 (single copy domestic); $1.65 (single copy foreign). Subscription price: $65.00 a year domestic; $81.25 a year foreign.

U.S. Customs Service

Treasury Decisions

(T.D. 80–110)

Bonds

Approval and discontinuance of consolidated aircraft bonds (air carrier blanket bonds) Customs form 7605

The following consolidated aircraft bonds have been approved or discontinued as shown below. The symbol D indicates that the bond previously outstanding has been discontinued on the month, day, and year represented by the figures which follow. PB refers to a previous bond, dated as represented by figures in parentheses immediately following, which has been discontinued. If the previous bond was in the name of a different company or if the surety was different, the information is shown in a footnote at the end of the list.

Dated: April 24, 1980.

Name of principal and surety	Date term commences	Date of approval	Filed with district director/area director/amount
British Caledonian Airways Ltd., a British Corporation of London Airport, Gatwick, Horley, Surrey, England; Liberty Mutual Insurance Co. (a MA Corp.) [1]	Jan. 21, 1980	Apr. 1, 1980	Houston, TX; $100,000
Laker Airways Limited, Gatwick Airport, Horley, Surrey, England; Royal Globe Insurance Co.[1]	Feb. 28, 1980	Feb. 29, 1980	New York Seaport; $3,000,000
Thai Airways International Ltd., 19730 Pac. Hwy South, Suite 1100, Seattle, WA; American Motorists Ins. Co.[1]	Mar. 17, 1980	Mar. 19, 1980	New York Seaport; $100,000

[1] The foregoing principal has been designated as a carrier of bonded merchandise.

(BON–3–01)

ALFRED G. SCHOLLE,
Director, Carriers, Drawback and Bonds Division.

(T.D. 80-111)

Synopses of Drawback Decisions

The following are synopses of drawback rates issued November 29, 1979, to February 12, 1980, inclusive, pursuant to sections 22.1 through 22.5, inclusive, Customs Regulations.

In the synopses below are listed for each drawback rate approved under 19 U.S.C. 1313(a), the name of the company, the specified articles on which drawback is authorized, the merchandise which will be used to manufacture or produce these articles, the factories where the work will be accomplished, the date the statement was signed, the basis for determining payment, the Regional Commissioner who issued the rate, and the date on which it was signed.

(DRA-1-09)

Dated: April 24, 1980.

ALFRED G. SCHOLLE,
Director, Carriers, Drawback and Bonds Division.

(A) Company: Aero Dynamics Corp.
Articles: Pneumatic tools, one-quarter inch die grinders.
Merchandise: Imported two-piece one-quarter inch chucks.
Factory: Maryland Heights, Mo.
Statement signed: December 20, 1979.
Basis of claim: Used in.
Rate issued by Regional Commissioner of Customs: Chicago, January 18, 1980.

(B) Company: Alpha-Monarch Corp.
Articles: Vibration generators.
Merchandise: Imported machine steel parts.
Factory: Euless, Tex.
Statement signed: October 5, 1978.
Basis of claim: Appearing in.
Rate issued by Regional Commissioner of Customs: Houston, December 12, 1979.

(C) Company: Bilchem Ltd.
Articles: Dipyridamol raw, dipyridamol pure, and dipyridamol tosylate.
Merchandise: Imported and/or drawback nitroorotic acid of potassium salt and piperidine.
Factory: Ponce, P.R.

Statement signed: September 21, 1979.
Basis of claim: Used in.
Rate issued by Regional Commissioner of Customs: Miami, February 6, 1980.

(D) Company: Burwood Products Co.
Articles: Decorative wall clocks.
Merchandise: Imported clock movements.
Factory: Traverse City, Mich.
Statement signed: November 19, 1979.
Basis of claim: Used in.
Rate issued by Regional Commissioner of Customs: Chicago, December 13, 1979.

(E) Company: Central Bag Co.
Articles: Bags.
Merchandise: Imported cotton cloth.
Factory: Kansas City, Mo.
Statement signed: January 25, 1980.
Basis of claim: Appearing in.
Rate issued by Regional Commissioner of Customs: Chicago, February 4, 1980.

(F) Company: Ciba-Geigy Corp.
Articles: Irgasan DP–300.
Merchandise: Imported and/or drawback trichloro amino diphenyl ether—also known as 2,4,4-trichloro-2-amino diphenly ether, trichloro amino diphenly ether 2442, and TADE.
Factory: Cranston, R.I.
Statement signed: December 27, 1979.
Basis of claim: Used in.
Rate issued by Regional Commissioner of Customs: New York, February 12, 1980.

(G) Company: Crawler Systems, Inc.
Articles: Track groups for excavator undercarriages.
Merchandise: Imported track chains, track shoes, bolts, and nuts.
Factory: Gurnee, Ill.
Statement signed: December 10, 1979.
Basis of claim: Used in.
Rate issued by Regional Commissioner of Customs: Chicago, December 28, 1979.

(H) Company: Custom Tool & Manufacturing Co.
Articles: Combustion turbine blades.
Merchandise: Imported rough-forged blades.
Factory: Minneapolis, Minn.
Statement signed: November 15, 1979.
Basis of claim: Used in, less-valuable waste.
Rate issued by Regional Commissioner of Customs: New York, January 21, 1980.

(I) Company: Datapoint Corp.
Articles: Electronic data processing equipment.
Merchandise: Imported cartridge disk drive.
Factories: Sunnyvale, Calif.; Waco and San Antonio, Tex.
Statement signed: November 30, 1979.
Basis of claim: Appearing in.
Rate issued by Regional Commissioner of Customs: Houston, December 14, 1979.

(J) Company: Driver-Harris Co.
Articles: Titanium sheet, wire rod, coil (skelp), cropped ends.
Merchandise: Imported titanium ingots and bars.
Factory: Harrison, N.J.
Statement signed: November 30, 1979.
Basis of claim: Used in, with distribution to the products obtained in accordance with their relative value at the time of separation.
Rate issued by Regional Commissioner of Customs: New York, December 19, 1979.

(K) Company: Euclid Equipment, division of Decicom Systems, Inc.
Articles: Generator sets.
Merchandise: Imported German-made Deutz diesel engines.
Factory: Wheatley Heights, N.Y.
Statement signed: January 15, 1980.
Basis of claim: Appearing in.
Rate issued by Regional Commissioner of Customs: New York, February 5, 1980.

(L) Company: General Electro Music Corp.
Articles: Electronic organs.
Merchandise: Imported electronic organ parts, subassemblies, and cabinets.
Factory: Elk Grove Village, Ill.
Statement signed: December 5, 1979.
Basis of claim: Appearing in.

Rate issued by Regional Commissioner of Customs: Chicago, December 28, 1979.
Revokes: T.D. 76–70–S, to cover change in name from Galanti Group, Inc.

(M) Company: Lion Hydraulics, Inc.
Articles: Complete hydraulics cylinders, finished hydraulics cylinder parts.
Merchandise: Imported raw hydraulics cylinder parts.
Factory: Mountain Lake, Minn.
Statement signed: November 12, 1979.
Basis of claim: Used in.
Rate issued by Regional Commissioner of Customs: New York, December 19, 1979.

(N) Company: N & N Contact Lens Co., Ltd.
Articles: Contact lens.
Merchandise: Imported contact lens blanks.
Factory: Lynnwood, Wash.
Statement signed: November 14, 1979.
Basis of claim: Used in.
Rate issued by Regional Commissioner of Customs: San Francisco, December 13, 1979.

(O) Company: National Plywood, Inc.
Articles: Finished wall/ceiling panels.
Merchandise: Imported plywood panels.
Factory: Long Beach, Calif.
Statement signed: January 4, 1980.
Basis of claim: Appearing in.
Rate issued by Regional Commissioner of Customs: San Francisco, January 29, 1980.

(P) Company: Nooter Corp.
Articles: Special vessels used in processing chemical, space, aeronautical, pharmaceutical, pulp and paper, and other industries, made to order.
Merchandise: Imported steel plate, clad steel, tank heads, nozzle forgings, welding wire, nuts and bolts, gaskets, tubing, titanium, nickle, zirconium, silver, platinum, zinc, bronze, tantalum, brass, copper, and various component parts.
Factory: St. Louis, Mo.
Statement signed: November 7, 1979.
Basis of claim: Used in, less valuable waste.

Rate issued by Regional Commissioner of Customs: Chicago, December 13, 1979.

(Q) Company: Plant City Steel Co.
Articles: LPG tanks.
Merchandise: Imported steel plate (A–455).
Factory: Jesup, Ga.
Statement signed: December 21, 1979.
Basis of claim: Appearing in.
Rate issued by Regional Commissioner of Customs: Miami, January 23, 1980.

(R) Company: Prior Coated Metals.
Articles: Stucco-embossed galvanized steel sheet cut to specific size.
Merchandise: Galvanized steel sheet in coils.
Factory: Marietta, Ga.
Statement signed: January 18, 1980.
Basis of claim: Appearing in.
Rate issued by Regional Commissioner ot Customs: New York, February 5, 1980.

(S) Company: Quantel International, Inc.
Articles: Finished laser systems, accessories, or parts thereof.
Merchandise: Imported laser heads, parts of laser power supplies.
Factory: Sunnyvale, Calif.
Statement signed: December 18, 1979.
Basis of claim: Used in.
Rate issued by Regional Commissioner of Customs: San Francisco, December 31, 1979.

(T) Company: Raytheon Co.
Articles: Finished semiconductor devices.
Merchandise: Imported semiconductor subassemblies.
Factory: Mountain View, Calif.
Statement signed: January 23, 1980.
Basis of claim: Appearing in.
Rate issued by Regional Commissioner of Customs: San Francisco, January 29, 1980.

(U) Company: Thermo King Caribbean, Inc.
Articles: Transport refrigeration units.
Merchandise: Imported diesel engines.
Factory: Ciales, Puerto Rico.
Statement signed: September 1, 1979.
Basis of claim: Used in.

Rate issued by Regional Commissioner of Customs: New York, January 21, 1980.

(V) Company: Thermo King Corp.
Articles: Refrigerated transportation units.
Merchandise: Imported Mercedes Benz 4-cylinder industrial diesel engine, model OM-636; Isuzu 4-cylinder industrial diesel engine, model C-201.
Factories: Minneapolis, Minn.; Louisville, Ga.
Statement signed: December 13, 1979.
Basis of claim: Used in.
Rate issued by Regional Commissioner of Customs: New York, February 5, 1980.

(W) Company: Toledo Pickling & Steel Service, Inc.
Articles: Pickled and oiled hot-rolled steel coils, cold-rolled steel coils, and galvanized steel coils, all slit and/or cut to length.
Merchandise: Imported hot-rolled, cold-rolled, and galvanized steel Coils.
Factory: Toledo, Ohio.
Statement signed: February 1, 1980.
Basis of claim: Appearing in.
Rate issued by Regional Commissioner of Customs: Chicago, February 6, 1980.

(X) Company: Tranter, Inc.
Articles: Heat exchangers, also known as Superchangers.
Merchandise: Imported heat exchanger plates, also known as Superchanger plates, heat exchanger gaskets, guide bars, guide bar supports, nozzles, tightening bolts, plates, and end frames.
Factories: Lansing, Mich.; Wichita Falls, Tex.
Statement signed: December 19, 1979.
Basis of claim: Used in, less valuable waste.
Rate issued by Regional Commissioner of Customs: Chicago, January 18, 1980.
Revokes: T.D. 77-59-M.

(Y) Company: U.S. Industries Inc., Clearing Division.
Articles: Machined car bodies.
Merchandise: Imported and/or drawback cast car bodies.
Factory: Chicago, Ill.
Statement signed: October 26, 1979.
Basis of claim: Appearing in.
Rate issued by Regional Commissioner of Customs: New York, February 7, 1980.

318-661 O - 80 - 2

(Z) Company: Western Fher Laboratories, Inc.
Articles: Dipyridamol and its salts; dichlorodipiperidinohomopurin dry (Dichlor).
Merchandise: Imported potassium salt of nitroorotic acid; piperidine.
Factory: Ponce, P.R.
Statement signed: September 21, 1979.
Basis of claim: Used in.
Rate issued by Regional Commissioner of Customs: Miami, November 29, 1979.
Revokes: T.D. 69–192–D, as amended by T.D. 75–6–D.

(T.D. 80–112)

Cotton Textile Products—Restriction on Entry

Restriction on entry of cotton textile products manufactured or produced in Brazil

There is published below a directive of February 26, 1980, received by the Commissioner of Customs from the chairman, Committee for the Implementation of Textile Agreements, concerning restriction on entry of cotton textile products in categories 339 and 369 manufactured or produced in Brazil. This directive amends, but does not cancel, that committee's directive of April 6, 1979 (T.D. 79–152).

This directive was published in the Federal Register on March 3, 1980 (45 F.R. 13791), by the committee.

(QUO–2–1)

Dated: April 21, 1980.

CHESTER R. KRAYTON,
Director, Duty Assessment Division.

U.S. DEPARTMENT OF COMMERCE,
INTERNATIONAL TRADE ADMINISTRATION,
Washington, D.C., February 26, 1980.

Committee for the Implementation of Textile Agreements

COMMISSIONER OF CUSTOMS,
Department of the Treasury,
Washington, D.C.

DEAR MR. COMMISSIONER: On April 6, 1979, the chairman of the Committee for the Implementation of Textile Agreements, directed

you to prohibit entry of cotton textile products, produced or manufactured in Brazil and exported to the United States during the agreement year which began on April 1, 1979, in excess of designated levels of restraint. The chairman further advised you that the levels of restraint are subject to adjustment.[1]

Under the terms of the Arrangement Regarding International Trade in Textiles done at Geneva on December 20, 1973, as extended on December 15, 1977; pursuant to the Bilateral Cotton Textile Agreement of April 22, 1976, as amended and extended, between the Governments of the United States and the Federative Republic of Brazil; and in accordance with the provisions of Executive Order 11651 of March 3, 1972, as amended by Executive Order 11951 of January 6, 1977, you are directed to increase, effective on February 27, 1980, the levels of restraint established for category 339 to 243,131 dozen and category 369 [2] to 729,725 pounds.[3]

The action taken with respect to the Government of the Federative Republic of Brazil with respect to imports of cotton textile products from Brazil has been determined by the Committee for the Implementation of Textile Agreements to involve foreign affairs functions of the United States. Therefore, the directions to the Commissioner of Customs, which are necessary for the implementation of such actions, fall within the foreign affairs exception to the rulemaking provisions of 5 U.S.C. 553. This letter will be published in the Federal Register.

Sincerely,

PAUL T. O'DAY,
Chairman, Committee for the Implementation of Textile Agreements.

---

[1] The term "adjustment" refers to those provisions of the Bilateral Cotton Textile Agreement of Apr. 22, 1976, as amended and extended, between the Governments of the United States and the Federative Republic of Brazil which provide, in part, that: (1) Within the aggregate and applicable percentages, specific limits may be exceeded by designated percentages; (2) specific ceilings may be increased for carryover and carryforward up to 11 percent of the applicable category limit; (3) consultation levels may be increased within the aggregate and applicable group limits upon agreement between the two governments; and (4) administrative arrangements or adjustments may be made to resolve minor problems arising in the implementation of the agreement.

[2] In category 369, only TSUSA Nos.: 360.2000, 360.2500, 360.3000, 360.7600, 360.8100, 361.0510, 361.1820, 361.5000, 361.5420, and 361.5630.

[3] The levels of restraint have not been adjusted in either case to reflect any imports after Mar. 31, 1979.

(T.D. 80–113)

Cotton, Wool, and Manmade Fiber Textile Products—Restriction on Entry

Restriction on entry of cotton, wool, and manmade fiber textile products manufactured or produced in Haiti

There is published below a directive of March 3, 1980, received by the Commissioner of Customs from the chairman, Committee for the Implementation of Textile Agreements, concerning visa requirements for entry of cotton, wool, and manmade fiber textile products in categories 300–369, 400–469, and 600–669 manufactured or produced in Haiti.

This directive was published in the Federal Register on March 6, 1980 (45 F.R. 14617) by the committee.

(QUO-2-1)

Dated: April 21, 1980.

CHESTER R. KRAYTON,
Director, Duty Assessment Division.

U.S. DEPARTMENT OF COMMERCE,
INTERNATIONAL TRADE ADMINISTRATION,
Washington, D.C., March 3, 1980.

Committee for the Implementation of Textile Agreements

COMMISSIONER OF CUSTOMS,
Department of the Treasury,
Washington, D.C.

DEAR MR. COMMISSIONER: Under the terms of the Arrangement Regarding International Trade in Textiles done at Geneva on December 20, 1973, as extended on December 15, 1977; pursuant to the Bilateral Cotton, Wool and Man-Made Fiber Textile Agreement of August 17, 1979, between the Governments of the United States and the Republic of Haiti; and in accordance with the provisions of Executive Order 11651 of March 3, 1972, as amended by Executive Order 11951 of January 6, 1977, you are directed to prohibit, effective on April 18, 1980, and until further notice, entry into the United States for consumption and withdrawal from warehouse for consumption of cotton, wool, and manmade fiber textile and apparel products in categories 300–369, 400–469, and 600–669, produced or manufactured in Haiti and exported on and after April 18, 1980, for which the Government of the Republic of Haiti has not issued an appropriate

export visa, fully described below. Merchandise exported before the effective date of this directive shall be permitted entry without a visa.

The export visa will be an original circular stamp in blue ink on the front of the invoice (Special Customs invoice form 5515, successor document, or commercial invoice when that form is used) and will be signed by an official of the Government of the Republic of Haiti. It will also include its number, the date, and show the correct categories and quantities in the shipment in applicable category units; otherwise, entry will be denied. However, if the quantity indicated on the visa is more than that of the shipment, entry shall be permitted.

Merchandise for the personal use of the importer and not for resale does not require a visa.

You are directed to permit entry into the United States for consumption and withdrawal from warehouse for consumption of designated shipments of cotton, wool, and/or manmade fiber textile products, produced or manufactured in Haiti, notwithstanding the designated shipment or shipments do not fulfill the aforementioned visa requirements, whenever requested to do so in writing by the Committee for the Implementation of Textile Agreements.

A detailed description of the textile categories in terms of TSUSA numbers was published in the Federal Register on January 4, 1978 (43 F.R. 884), as amended on January 25, 1978 (43 F.R. 3421), March 3, 1978 (43 F.R. 8828), June 22, 1978 (43 F.R. 26773), September 5, 1978 (43 F.R. 39408), January 2, 1979 (44 F.R. 94), March 22, 1979 (44 F.R. 17545), and April 12, 1979 (44 F.R. 21843), and December 20, 1979 (44 F.R. 75441).

In carrying out the above directions, entry into the United States for consumption shall be construed to include entry for consumption into the Commonwealth of Puerto Rico.

The actions taken with respect to the Government of the Republic of Haiti and with respect to imports of cotton, wool, and manmade fiber textile products from Haiti, have been determined by the Committee for the Implementation of Textile Agreements to involve foreign affairs functions of the United States. Therefore, the directions to the Commissioner of Customs, which are necessary for the implementation of such actions, fall within the foreign affairs exception to the rulemaking provisions of 5 U.S.C. 553. This letter will be published in the Federal Register.

Sincerely,

PAUL T. O'DAY,
Chairman, Committee for the Implementation of Textile Agreements.

Enclosure.

Export Visa Used by the Government of the Republic of Haiti for Cotton, Wool and Manmade Fiber Textile and Apparel Products Exported to the United States

VISA No _____

(T.D. 80–114)

Cotton, Wool, and Manmade Fiber Apparel Products—Restriction on Entry

Restriction on entry of cotton, wool, and manmade fiber apparel products manufactured or produced in Indonesia

There is published below a directive of March 24, 1980, received by the Commissioner of Customs from the chairman, Committee for the Implementation of Textile Agreements, concerning visa requirements on cotton, wool, and manmade fiber apparel products in certain categories manufactured or produced in Indonesia. This directive amends, but does not cancel, that committee's directive of February 1, 1980 (T.D. 80–74).

This directive was published in the Federal Register on March 28, 1980 (45 F.R. 20518), by the committee.

(QUO–2–1)

Dated: April 24, 1980.

CHESTER R. KRAYTON,
Director, Duty Assessment Division.

U.S. DEPARTMENT OF COMMERCE,
INTERNATIONAL TRADE ADMINISTRATION,
Washington, D.C., March 24, 1980.

Committee for the Implementation of Textile Agreements

COMMISSIONER OF CUSTOMS,
Department of the Treasury,
Washington, D.C.

DEAR MR. COMMISSIONER: To facilitate implementation of the Bilateral Cotton, Wool and Man-Made Fiber Textile Agreement with Indonesia and the export visa requirement established under its terms for apparel products, it would be appreciated if you would correct the date of effect included in the directive of February 1, 1980, to indicate that the visa requirement will be effective on March 15, 1980, for apparel products in the specified categories which have been exported on and after March 15, 1980.

This letter will be published in the Federal Register.

Sincerely,

PAUL T. O'DAY,
Chairman, Committee for the Implementation of Textile Agreements.

(T.D. 80-115)

Bonds

Approval and discontinuance of carrier bonds, Customs form 3587

Bonds of carriers for the transportation of bonded merchandise have been approved or discontinued as shown below. The symbol D indicates that the bond previously outstanding has been discontinued on the month, day, and year represented by the figures which follow. PB refers to a previous bond, dated as represented by figures in parentheses immediately following, which has been discontinued. If the previous bond was in the name of a different company or if the surety was different, the information is shown in a footnote at the end of the list.

Dated: April 29, 1980.

Name of principal and surety	Date of bond	Date of approval	Filed with district director/area director/amount
American Container Transport Co., 7350 W. Marginal Way S.W., Seattle, WA; motor carrier; Cotton Belt Insurance Co.	Feb. 5, 1980	Feb. 26, 1980	Seattle, WA; $25,000
Butler-Jones Air Freight Inc., P. O. Box 1964, Salisbury, MD; motor carrier; Fidelity and Deposit Co.	Dec. 18, 1979	Mar. 7, 1980	Baltimore, MD; $25,000
Canadian Pacific Limited, Windsor Station, Montreal, P. Q., Canada; rail carrier; Aetna Insurance Co. (PB 9/5/72) D 3/17/80 [1]	Jan. 17, 1980	Mar. 17, 1980	St. Albans, VT; $100,000
Gordon O. Cellum d/b/a Cellum & Son Brokerage, 721 N. Cage; P. O. Box 887, Pharr, TX; motor carrier; Fidelity & Deposit Co. of MD	Mar. 1, 1980	Mar. 13, 1980	Laredo, TX; $25,000
Coastal Transport Co., Inc., 6300 Richmond Ave., Suite 200, Houston, TX; motor carrier; St. Paul Fire & Marine Ins. Co.	Feb. 6, 1980	Mar. 27, 1980	Houston, TX; $100,000
Cooper-Jarrett, Inc., Hanover Plaza, Morristown, NJ; motor carrier; Sentry Insurance & Mutual Co.	Dec. 20, 1979	Dec. 20, 1979	New York Seaport; $50,000
Crowley Maritime Corp. and its w/o/s Puget Sound Tug & Barge Co., Alaska Hydro-Train Corp., Alaska-British Columbia Transportation Co., Arctic Lighterage Co., Columbia Marine Lines, Inc., Columbia Common Carriers, Inc., Drummond Lighterage Co., Hawaiian Marine Lines, Inc., Pacific Alaska Line, Inc., Crowley Towing & Transportation Co., Gulf Caribbean Marine Lines, Inc., 2401 4th Ave., Seattle, WA; water carrier; Washington International Ins. Co.	Feb. 29, 1980	Mar. 25, 1980	Seattle, WA $110,000
E Z Freight Lines, Gould St., & E 46 St., Bayonne, NJ; motor carrier; Peerless Insurance Co.	Mar. 5, 1980	Apr. 4, 1980	Newark, NJ; $50,000
Eagle Motor Lines, Inc., P.O. Box 11086, 830 North 33rd St., Birmingham, AL; motor carrier; Fidelity and Deposit Co. of MD.	Apr. 9, 1980	Apr. 10, 1980	New Orleans, LA; $25,000
Farmingdale Trucking Corp., 200 Sherwood Ave., Farmingdale, NY; motor carrier; Aetna Insurance Co. (A Ct. Corp.)	Mar. 21, 1980	Mar. 21, 1980	New York Seaport; $50,000
Fredrick Transport Ltd., R.R. No. 6, Chatham, Ontario, Canada; motor carrier; Lawyers Surety Corp. D 3/21/80	Mar. 13, 1979	Mar 13, 1979	Detroit, MI; $50,000
Gateway Trucking Co., Inc., 2030 East Beaver St., Tampa, FL; motor carrier; Aetna Casualty & Surety Co.	Sept. 11, 1979	Mar. 19, 1980	Tampa, FL; $25,000
George Transfer & Rigging Co., Inc., P. O. Box 500, Interstate 83 at Md. Rt. 439, Parkton, MD; motor carrier; Fidelity & Deposit Co. of MD (PB 3/1/68) D 3/1/80 [2]	Feb. 14, 1980	Mar. 25, 1980	Baltimore, MD; $25,000

See footnotes at end of table.

Name of principal and surety	Date of bond	Date of approval	Filed with district director/area director/amount
Charles Harris & Sons Transport Limited, 1436 Plains Rd. West, Burlington, Ontario, Canada; motor carrier; Hartford Fire Ins. Co. D 3/7/80	Jan. 7, 1976	Nov. 21, 1978	Buffalo, NY; $25,000
Hill and Hill Truck Lines, Inc., P. O. Box 9698, Houston, TX; motor carrier; Lawyers Surety Corp. (PB 6/13/78) D 4/3/80 [3]	Mar. 1, 1980	Apr. 3, 1980	Houston, TX; $25,000
Keep On Trucking Co., Inc., 370 8th Ave., Oakland, CA; motor carrier; Fidelity and Deposit Co. of MD	Mar. 11, 1980	Mar. 13, 1980	San Francisco, CA; $25,000
Kirk Bros. Transportation, Inc., 800 Vandemark Rd., Sidney, OH; motor carrier; United States Fidelity and Guaranty Co.	Mar. 25, 1980	Apr. 1, 1980	Cleveland, OH; $50,000
Lindy Trucking, Inc., Industrial Park, Red Wing, MN; motor carrier; The North River Ins. Co. (PB 12/7/78) D 3/9/80 [4]	Mar. 10, 1980	Mar. 10, 1980	Minneapolis, MN; $25,000
W. C. McQuaide, Inc., 153 Macridge Ave., Johnstown, Pa; motor carrier; Pennsylvania National Mutual Casualty Ins. Co.	Feb. 25, 1980	Mar. 3, 1980	Philadelphia, PA; $25,000
Julian Martin, Inc., P. O. Box 3348, Batesville, AR; motor carrier; Western Surety Co.	Mar. 27, 1980	Apr. 9, 1980	New Orleans, LA; $25,000
Morgan Drive Away, Inc., 28651 U.S. 20 West, P. O. Box 1168, Elkhart, IN; motor carrier; American Motorists Ins. Co.	Dec. 17, 1979	Mar. 31, 1980	Chicago, IL; $35,000
Mustang Distributing Co., Inc., 23505, N.E. Halsey, Troutdale, OR; motor carrier; American States Ins. Co.	Mar. 18, 1980	Mar. 21, 1980	Portland, OR; $25,000
National Transportation, Inc., 14031 L St., Omaha, NB; motor carrier; Aetna Casualty and Surety Co.	Feb. 6, 1980	Mar. 13, 1980	Chicago, IL; $50,000
Over-Nite Motor Service, Inc., 3600 West State St., Rockford, IL; motor carrier; Peerless Ins. Co. D 3/11/80	Oct. 4, 1974	Oct. 30, 1974	Chicago, IL; $35,000
Petro-Chemical Transport, Inc., P. O. Box 1399, Victoria, TX; motor carrier; Fidelity and Deposit Co. of MD	Mar. 19, 1980	Mar. 25, 1980	Laredo, TX; $25,000
Prime Inc., Rt 1 Box 1158, Urbana, MO; motor carrier; St. Paul Fire & Marine Ins. Co.	Mar. 21, 1980	Mar. 24, 1980	Detroit, MI; $50,000
Ty Pruitt Trucking Inc., 6717 Quad Avenue., Baltimore, MD; motor carrier; Insurance Co. of North America	Feb. 21, 1980	Mar. 31, 1980	Baltimore, MD; $25,000
T. E. Quinn Truck Lines Ltd., Glendale Ave., P.O. Box 401, Niagara Falls, Ontario, Canada; motor carrier; St. Paul Fire & Marine Ins. Co. (PB 2/14/77) D 3/28/80 [5]	Mar. 27, 1980	Mar. 28, 1980	Buffalo, NY; $25,000

See footnotes at end of table.

318-661 O - 80 - 3

Name of principal and surety	Date of bond	Date of approval	Filed with district director/area director/amount
Reisch Trucking & Transportation Co., Inc., 819 Union Ave., Pennsauken, NJ; motor carrier; St. Paul Fire & Marine Ins. Co. (PB 1/24/77) D 2/11/80 [6]	Jan. 4, 1980	Feb. 11, 1980	Philadelphia, PA; $50,000
Reliable Transport (U.S.) Limited, 64 Mackinaw St., Buffalo, NY; motor carrier; The Continental Ins. Co. (PB 2/6/76) D 3/28/80	Feb. 6, 1980	Mar. 28, 1980	Buffalo, NY; $25,000
Bobby Smith Transport, Inc., P.O. Box 7556, Fort Worth, TX; motor carrier; United States Fire Ins. Co. (PB 1/11/72) D 2/1/80 [7]	Jan. 22, 1980	Feb. 2, 1980	Laredo, TX; $25,000
Summit Airlines Inc., Philadelphia International Airport, Philadelphia, PA; air carrier; Fidelity & Deposit Co. D 2/4/80	Jan. 24, 1977	Mar. 3, 1977	Philadelphia, PA; $25,000
Triangle Transportation & Warehousing Systems, Inc., 5051 Still Creek Road, Burnaby, B.C., Canada; motor carrier; Safeco Insurance Co. of America (PB 7/18/77) D 2/5/80 [8]	Jan. 15, 1980	Feb. 5, 1980	Seattle, WA; $25,000
James E. Young, P.O. Box 509, Weatherford, TX; motor carrier; St. Paul Fire & Marine Ins. Co. (PB 12/1/71) D 1/1/80 [9]	Jan. 1, 1980	Jan. 1, 1980	Laredo, TX; $25,000

[1] Surety is Transamerica Insurance Co.
[2] Surety is the Travelers Indemnity Co.
[3] Surety is Protective Insurance Co.
[4] Surety is AID Insurance Co. (Mutual)
[5] Surety is Aetna Casualty & Surety Co.
[6] Surety is the American Insurance Co.
[7] Surety is the Travelers Indemnity Co.
[8] Principal is Triangle Express, Ltd.
[9] Surety is the Travelers Indemnity Co.

(BON-3-03)

ALFRED G. SCHOLLE,
Director,
Carriers, Drawback, and Bonds Division.

(T.D. 80-116)

Entry and Clearance of Aircraft; Part 6, Customs Regulations, Amended

TITLE 19—CUSTOMS DUTIES

CHAPTER I—U.S. CUSTOMS SERVICE

PART 6—AIR COMMERCE REGULATIONS

AGENCY: U.S. Customs Service, Department of the Treasury.

ACTION: Interim regulation.

SUMMARY: This document amends the Customs Regulations pertaining to air commerce to provide: (1) That aircraft clearing the United States for, or entering the United States from, Cuba shall obtain permission to depart from or enter at the Fort Lauderdale-Hollywood International Airport, Fort Lauderdale, Fla.; and (2) procedures to be followed by pilots clearing or entering there. The amendment is being made to provide for the safe and expeditious transportation of persons between Cuba and the United States.

EFFECTIVE DATE: April 29, 1980.

COMMENTS: This amendment is being published as an interim regulation, effective on April 29, 1980. However, written eomments received within 30 days of the date of publication will be considered in determining whether any change to the regulation is required before a permanent rule is published.

FOR FURTHER INFORMATION CONTACT: John A. Mathis, Carriers, Drawback and Bonds Division, U.S. Customs Service, 1301 Constitution Avenue NW., Washington, D.C. 20229; 202-566-5706.

SUPPLEMENTARY INFORMATION:

BACKGROUND

Because of the present situation involving aliens attempting to reach the United States from Cuba, there is serious reason to believe that unsafe and unlawful means of transportation will be utilized. It has therefore become imperative to issue an emergency regulation to insure compliance with Customs and related laws and regulations, and to provide for the safe and expeditious transportation of persons between Cuba and the United States in accordance with all applicable U.S. laws. Customs, therefore, has determined that it is desirable to amend its regulations, effective April 29, 1980, to establish procedures relating to transportation by aircraft. These procedures particularly apply to limiting clearance and entry of aircraft proceeding between

the United States and Cuba to the Fort Lauderdale-Hollywood International Airport, Fort Lauderdale, Fla., and are undertaken in accordance with regulations propounded by the Federal Aviation Administration (14 CFR 91.101), the Immigration and Naturalization Service (8 CFR parts 231, 239), and the Department of Commerce (15 CFR 371.19).

COMMENTS

Before adopting this regulation as a permanent rule, consideration will be given to any written comments timely submitted to the Commissioner of Customs. Comments submitted will be available for public inspection in accordance with section 103.8(b), Customs Regulations (19 CFR 103.8(b)), during regular business hours at the Regulations and Research Division, room 2426, 1301 Constitution Avenue NW., Washington, D.C. 20229.

INAPPLICABILITY OF NOTICE AND DELAYED EFFECTIVE DATE PROVISIONS

In view of the exigencies relating to this matter, Customs has determined that pursuant to 5 U.S.C. 553(b)(B), notice and public procedure are impracticable, and pursuant to 5 U.S.C. 553(d)(3), good cause exists for dispensing with a delayed effective date.

AMENDMENT TO THE REGULATIONS

Part 6, Customs Regulations (19 CFR part 6), is amended by adding a new section 6.3a, to read as follows:

6.3a *Entry and Clearance; Cuba.*

(a) Unless otherwise authorized by the Regional Commissioner of Customs, Miami, Fla., the owner or person in command of any aircraft clearing the United States for, or entering the United States from, Cuba, whether the aircraft is departing on a temporary sojourn, or for export, shall:

(1) Clear or obtain permission to depart from, or enter at, the Fort Lauderdale-Hollywood International Airport, Fort Lauderdale, Fla.;

(2) Before arrival from Cuba, furnish a notice of intended arrival to the Customs Service, either by or at the request of the commander of the aircraft, not less than 15 minutes before crossing the United States coast or border. The notice shall be furnished through the Federal Aviation Administration flight notification procedures or directly to the Customs officer in charge at the Fort Lauderdale-Hollywood International Airport, Fort Lauderdale, Fla. The notice shall include the following:

(i) Aircraft registration number;

(ii) Name of aircraft commander;

(iii) Number of U.S. citizen passengers;

(iv) Number of alien passengers;

(v) Place of last foreign departure;

(vi) Estimated time and location of crossing U.S. coast or border; and

(vii) Estimated time of arrival.

(3) Upon arrival, present a manifest of all passengers on board, as required by 8 CFR 231.1(b), to an officer of the U.S. Immigration and Naturalization Service or to a Customs officer acting as an immigration officer.

(4) As a condition precedent to clearance, present to Customs:

(i) The documents required by section 6.8 of this part; and

(ii) A validated license issued by the Department of Commerce, as provided for in 15 CFR part 371, or a license issued by the Department of State, as provided in 22 CFR part 123. See footnote 2 to section 6.3 of this part.

(b) No passenger arriving from Cuba by aircraft will be released by Customs, nor will the aircraft be cleared or permitted to depart, before the passenger is released by an officer of the Immigration and Naturalization Service or by a Customs officer acting on behalf of that agency.

(c) All other provisions of this part relating to entry and clearance of aircraft are applicable to aircraft subject to this section. (R.S. 251, as amended, sec. 624, 46 stat. 759, sec. 1109, 79 stat. 799, as amended (19 U.S.C. 66, 1624, 49 U.S.C. 1509).)

REGULATION DETERMINED TO BE NONSIGNIFICANT

In a directive published in the Federal Register on November 8, 1978 (43 F.R. 52120), implementing Executive Order 12044, Improving Government Regulations, the Treasury Department stated that it considers each regulation or amendment to an existing regulation published in the Federal Register and codified in the Code of Federal Regulations to be significant.

However, regulations of this nature which are nonsubstantive, are essentially procedural, and do not impose substantial additional costs on those affected, may, with Secretarial approval, be determined not to be significant. Accordingly, it has been determined that this amendment does not meet the Treasury Department criteria in the directive for significant regulations.

DRAFTING INFORMATION

The principal author of this document was Lawrence P. Dunham, Regulations and Research Division, Office of Regulations and Rulings, U.S. Customs Service. However, personnel from other Customs offices participated in its development.

R. E. CHASEN,
Commissioner of Customs.

Approved: Apr. 29, 1980.
RICHARD J. DAVIS,
Assistant Secretary of the Treasury.

(T.D. 80-117)

Cotton Textile Products—Restriction on Entry

Restriction on entry of cotton textile products manufactured or produced in the Dominican Republic

There is published below a directive of March 19, 1980, received by the Commissioner of Customs from the Acting Director, Office of Textiles and Apparel, concerning restriction of entry of cotton textile products in category 351 manufactured or produced in the Dominican Republic. This directive amends, but does not cancel, that committee's directive of November 28, 1979 (T.D. 80-32).

This directive was published in the Federal Register on March 24, 1980 (45 F.R. 19017), by the committee.

(QUO-2-1)

Dated: April 25, 1980.

WILLIAM D. SLYNE
(For Chester R. Krayton,
Director, Duty Assessment Division).

U.S. DEPARTMENT OF COMMERCE,
INTERNATIONAL TRADE ADMINISTRATION,
Washington, D.C., March 19, 1980.

Committee for the Implementation of Textile Agreements

COMMISSIONER OF CUSTOMS,
Department of the Treasury,
Washington, D.C.

DEAR MR. COMMISSIONER: This directive amends, but does not cancel, the directive of November 28, 1979, from the chairman of the

Committee for the Implementation of Textile Agreements concerning imports into the United States of certain cotton and manmade fiber textile products, produced or manufactured in the Dominican Republic.

Under the terms of the Arrangement Regarding International Trade in Textiles done at Geneva on December 20, 1973, as extended on December 15, 1977; pursuant to the Bilateral Cotton, Wool and Man-Made Fiber Textile Agreement of August 7 and 8, 1979, as amended, between the Governments of the United States and the Dominican Republic; and in accordance with the provisions of Executive Order 11651 of March 3, 1972, as amended by Executive Order 11951 of January 6, 1977, you are directed to prohibit, effective on March 19, 1980, and for the 12-month period beginning on June 1, 1979, and extending through May 31, 1980, entry into the United States for consumption and withdrawal from warehouse for consumption of cotton textile products in category 351, produced or manufactured in the Dominican Republic, in excess of 247,000 dozen.[1]

The actions taken with respect to the Government of the Dominican Republic and with respect to imports of cotton textile products from the Dominican Republic have been determined by the Committee for the Implementation of Textile Agreements to involve foreign affairs functions of the United States. Therefore, these directions to the Commissioner of Customs, which are necessary for the implementation of such actions, fall within the foreign affairs exception to the rulemaking provisions of 5 U.S.C. 553. This letter will be published in the Federal Register.

Sincerely,

CHARLES E. RAYMOND,
Acting Director,
Office of Textiles and Apparel.

(T.D. 80-118)

Cotton and Manmade Fiber Apparel Products—Restriction on Entry

Restriction on entry of cotton and manmade fiber apparel products manufactured or produced in Haiti

There is published below a directive of March 21, 1980, received by the Commissioner of Customs from the chairman, Committee for the Implementation of Textile Agreements, concerning restriction on entry of cotton and manmade fiber apparel products in categories 349, 649, and 632 manufactured or produced in Haiti. This directive

[1] The level of restraint has not been adjusted to reflect any imports after May 31, 1979.

amends, but does not cancel, that committee's directive of November 7, 1979 (T.D. 80-31).

This directive was published in the Federal Register on March 26, 1980 (45 F.R. 19597), by the committee.

(QUO-2-1)

Dated: April 25, 1980.

WILLIAM D. SLYNE
(For Chester R. Krayton,
Director, Duty Assessment Division).

U.S. DEPARTMENT OF COMMERCE,
INTERNATIONAL TRADE ADMINISTRATION,
Washington, D.C., March 21, 1980.

Committee for the Implementation of Textile Agreements

COMMISSIONER OF CUSTOMS,
Department of the Treasury,
Washington, D.C.

DEAR MR. COMMISSIONER: This directive amends, but does not cancel, the directive of November 7, 1979, from the chairman of the Committee for the Implementation of Textile Agreements which directed you to prohibit entry during the 12-month period beginning on May 1, 1979, and extending through April 30, 1980, of cotton and manmade fiber textile products in certain specified categories, produced or manufactured in Haiti, in excess of designated levels of restraint. The directive of November 7, 1979, further advised you that the levels of restraint are subject to adjustment.[1]

Under the terms of the Arrangement Regarding International Trade in Textiles done at Geneva on December 20, 1973, as extended on December 15, 1977; pursuant to the Bilateral Cotton, Wool and Man-Made Fiber Textile Agreement of August 17, 1979, as amended, between the Governments of the United States and Haiti; and in accordance with the provisions of Executive Order 11651 of March 3, 1972, as amended by Executive Order 11951 of January 6, 1977, you are directed to prohibit, effective on March 26, 1980, and for the

[1] The term "adjustment" refers to those provisions of the Bilateral Cotton, Wool, and Man-Made Fiber Textile Agreement of Aug. 17, 1979, as amended, between the Governments of the United States and Haiti which provide, in part, that: (1) For the second and third agreement years, each specific limit, except for category 349/649, may be increased by 7 percent annually; (2) any specific ceiling may be exceeded in any agreement year by not more than 7 percent of its square yards equivalent total, provided that the amount of the increase is compensated for by an equivalent decrease in one or more specific limits; (3) specific limits may also be increased for carryover and carryforward up to 11 percent of the applicable category limit; and (4) administrative arrangements or adjustments may be made to resolve minor problems arising in the implementation of the agreement.

12-month period beginning on May 1, 1979, and extending through April 30, 1980, entry into the United States for consumption and withdrawal from warehouse for consumption of categories 349/649 and 632, produced or manufactured in Haiti, in excess of the following levels of restraint:

Category	*Amended 12-month level of restraint*
349/649	1,250,636 dozen
632	1,545,060 dozen pairs

Textile products in category 349 which have been exported to United States prior to May 1, 1979, shall not be subject to this directive.

Textile products in category 349 which have been released from the custody of the U.S. Customs Service under the provisions of 19 U.S.C. 1448(b) or 1484(a)(1)(A) prior to the effective date of this directive shall not be denied entry under this directive.

The actions taken with respect to the Government of Haiti and with respect to imports of cotton and manmade fiber textile products from Haiti have been determined by the Committee for the Implementation of Textile Agreements to involve foreign affairs functions of the United States. Therefore, these directions to the Commissioner of Customs, which are necessary for the implementation of such actions, fall within the foreign affairs exception to the rulemaking provisions of 5 U.S.C. 553. This letter will be published in the Federal Register.

Sincerely,

PAUL T. O'DAY,
Chairman, Committee for the Implementation of Textile Agreements.

ERRATUM

In CUSTOMS BULLETIN, vol. 14, No. 14, dated April 2, 1980, in T.D. 80–86, on page 3, the name of the principal Garden City Transfer, Inc., should be corrected to Garden City Transportation, Inc.

Decisions of the United States Customs Court

United States Customs Court

One Federal Plaza

New York, N.Y. 10007

Chief Judge

Edward D. Re

Judges

Paul P. Rao
Morgan Ford
Scovel Richardson
Frederick Landis
James L. Watson
Herbert N. Maletz
Bernard Newman
Nils A. Boe

Senior Judge

Samuel M. Rosenstein

Clerk

Joseph E. Lombardi

Customs Decision

(C.D. 4853)

EDDIETRON, INC., PLAINTIFF *v.* UNITED STATES, DEFENDANT

Court No. 79-2-00306

JURISDICTION—TIME TO COMMENCE ACTION

An importer of golf carts seeks to contest the assessment of dumping duties on seven protested entries. Defendant moved to dismiss claiming that the action was not timely filed. The court held that the action was timely filed when the action was commenced by mailing the summons by certified mail within the 180-day limit prescribed by 28 U.S.C. 2631(a)(1).

CUSTOMS COURT RULES—COMMENCEMENT OF ACTION—FILING BY MAIL

Rule 3.2(b) of the Rules of the Customs Court permits an action to be commenced by mailing of a summons to the court by certified mail, and the summons is deemed filed as of the date of mailing. *United States* v. *Fairfield Gloves et al.*, 558 F. 2d 1023, 64 CCPA 126, C.A.D. 1194 (1977). In absence of a postmark, a date stamp on the certified mail receipt is satisfactory proof of date of filing and proof of compliance with the requirements of rule 3.2(b).

JURISDICTION—PAYMENT OF DUTIES BY PROMISSORY NOTE—ESTOPPEL

Execution and delivery of a promissory note does not satisfy the jurisdictional prerequisite of payment of all liquidated duties required by 28 U.S.C. 1582(c)(2). See also 19 U.S.C. 197, 198; *Don E. Williams Co.* v. *Commissioner of Internal Revenue*, 429 U.S. 569, 97 S. Ct. 850 (1976). By its acceptance of the promissory note, the United States is not estopped from denying that it served as payment. *Air-Sea Brokers, Inc.* v. *United States*, 596 F. 2d 1008, 66 CCPA —, C.A.D. 1222 (1979).

PAYMENT OF DUTIES—PARTIAL PAYMENT OF PROMISSORY NOTE COVERING MULTIPLE PROTESTS

Partial payment on a promissory note tendered for the amount of duties owed on six protests may, for jurisdictional purposes, be treated as payment in full of the liquidated duties owed on the first protest. *Champion Coated Paper Co.* v. *United States*, 24 CCPA 83, T.D. 48411 (1936).

[Motion to dismiss granted in part.]

(Dated April 16, 1980)

W. Warren Sparrow for the plaintiff.

Alice Daniel, Assistant Attorney General; *David M. Cohen*, Director, Customs Litigation Branch (*Velta T. Melnbrencis*, Assistant Director, on the briefs), for the defendant.

Re, Chief Judge: Plaintiff, an importer of golf carts from Poland, sues to recover certain dumping duties assessed on seven protested entries covered by this action. Defendant, alleging lack of jurisdiction, moves to dismiss the action upon the grounds that it was not timely commenced, and that the liquidated duties were not paid at the time it was filed.

Essentially, the following three questions are presented by defendant's motion to dismiss:

1. Is an action timely commenced when the summons is mailed within, but not received until after, the 180 days prescribed in 28 U.S.C. 2631(a)(1), and the postmark evidencing the date of mailing appears on a receipt for certified mail?

2. Does delivery and receipt of a promisory note constitute the payment of duties, required as a jurisdictional prerequisite under 28 U.S.C. 1582(c)(2), at the time an action is filed?

3. May a partial payment of the total amount owed on a promissory note delivered in payment of duties owed on six entries, be applied, for jurisdictional purposes, as payment on the first of those entries?

It is the determination of the court that this action has been timely filed. The court has also determined that, although the delivery and receipt of the promissory note does not constitute payment of duties on the six entries, the partial payment may be applied as payment in full of the duties owed on the first of those entries.

TIMELINESS

The seven protests were denied on August 16, 1978. Within 180 days thereafter, the summons instituting this action was sent on February 12, 1979, by certified mail return receipt requested, to the clerk of the court. The summons was received in the office of the clerk, and marked filed, on February 15, 1979, after the 180-day period.

In connection with defendant's motion to dismiss for untimeliness, plaintiff moves to have the record corrected to show that the summons was filed on the date it was mailed, i.e., February 12, 1979. In support of its motion, plaintiff submits a certified mail receipt bearing a postmark date of February 12, 1979. The envelope in which the summons was mailed and received in the office of the clerk bears no postmark.

Rule 3.2 of the rules of this court provides in material part:

> ((b) Summons: Filing by mail; date of filing: For purposes of commencement of an action, *a summons sent by registered or certified mail* properly addressed to the clerk of the court at One Federal Plaza, New York, N.Y. 10007, with the proper postage affixed and return receipt requested, ***shall be deemed filed as of the date of postmark.***
>
> * * * * * * *
>
> (e) Summons: Date of filing; motion to correct:
>
> (1) The records of the clerk, including the date of filing stamped on the summons, or when sent by registered or certified mail the date of postmark, shall be final and conclusive evidence of the date on which a summons was filed unless a motion to correct the record is made and granted pursuant to subparagraph (2) of this paragraph (e).
>
> (2) A party who contends that the effective filing date of a summons should be a date other than the date shown in the records of the clerk may seek a corrective order by motion made pursuant to rule 4.12, and the court may, upon satisfactory proof that the records of the clerk with respect to the filing date were incorrect, order the record corrected. [Italic added.]

In *United States* v. *Fairfield Gloves et al.*, 558 F. 2d 1023, 64 CCPA 126, C.A.D. 1194 (1977), the Court of Customs and Patent Appeals upheld the validity of rule 3.2(b) which permits an action to be "commenced" by the mailing of a summons to the court, rather than exclusively by the receipt of the summons in court, within the statutory period prescribed by 28 U.S.C. 2631(a), which provides:

> § 2631. *Time for commencement of action.*
>
> (a) An action over which the court has jurisdiction under section 1582(a) of this title is barred unless commenced within 180 days after:
>
> (1) the date of mailing of notice of denial, in whole or in part, of a protest pursuant to the provisions of section 515(a) of the Tariff Act of 1930, as amended; or
>
> (2) the date of denial of a protest by operation of law pursuant to the provisions of section 515(b) of the Tariff Act of 1930, as amended.

Of course, when an action is commenced by mailing a summons in the manner prescribed by rule 3.2(b), the operative fact is the date of *mailing*. For the purpose of commencing an action, a summons is deemed filed as of the date of mailing, rather than the date of receipt, if the specified method of mailing is utilized, and plaintiff shows by satisfactory proof that the conditions of mailing imposed by the rule have been satisfied. See *Texas Mex Brick & Import Co.* v. *United States*, 371 F. Supp. 579, 72 Cust. Ct. 291, C.R.D. 74-2 (1974); *Modern Clothing, Inc.* v. *United States*, 73 Cust. Ct. 233, C.R.D. 74-10 (1974).

As this court held in the *Fairfield Gloves* case, 77 Cust. Ct. 166, C.R.D. 76-10 (1976), *aff'd*, *United States* v. *Fairfield Gloves, supra*, a date-stamped receipt for certified mail is, as in this case, satisfactory proof of compliance within the requirements of rule 3.2(b). See also *Richardson* v. *Brown*, 443 F. 2d 926, 928 (10th Cir. 1971). Hence, since the summons in this action was deemed to have been filed on February 12, 1979, within the period prescribed by 28 U.S.C. 2631 (a)(1), it has been timely filed.

PAYMENT BY PROMISSORY NOTE

The facts pertaining to the payment of duties also are not in dispute. This action challenges the denial of seven protests (Nos. 1401-7-000135 through and including 1401-7-000141). The duties owed on the entry covered by protest No. 1401-7-000141 were timely and fully paid. As to the duties owed on the entries covered by the six remaining protests, plaintiff, on or about October 3, 1978, executed and delivered a promissory note in the amount of the duties owed. The appropriate Customs official "accepted" the note and marked as "canceled" the invoices for the remaining entries.

The issue here is whether the delivery and acceptance of the promissory note satisfies the jurisdictional prerequisite of payment of all liquidated duties required by 28 U.S.C. 1582(c)(2). In material part, this section provides that this court shall not have jurisdiction of an action unless "all liquidated duties, charges or exactions *have been paid* at the time the action is filed." [Italic added.]

Section 1582(c)(2) does not prescribe, nor does it indicate, the acceptable *method* of payment of duties. Prior to the Customs Courts Act of 1970, this provision was not included in title 28. A similar provision, however, was included in section 1515 of title 19 which provided that when a protest is filed against a collector's decision he shall "* * * in the case of merchandise entered for consumption, if all duties and charges *shall be paid*, then the collector shall forthwith transmit the entry * * * to the U.S. Customs Court * * *." [Italic added.]

This statutory requirement for the payment of duties was transferred, in the Customs Courts Act of 1970, from 19 U.S.C. 1515 to 28 U.S.C. 1582. Although there is a difference in the language used, that is, from "shall be paid" to "have been paid," the statutory prerequisite of payment is the same. Furthermore, there is nothing in the legislative history of the Customs Courts Act of 1970 to suggest that a different meaning was intended.

Other provisions of title 19 may be examined to determine the acceptable method of payment.

The statutory method for paying duties upon imports is prescribed in 19 U.S.C. 197 and 198. The general requirement is set out in section 197, which provides, in pertinent part:

> Except as provided in section 198 of this title all duties upon imports shall be collected in ready money, and shall be paid in gold and silver coin, coin certificates, and such other certificates or Treasury notes as may by law be declared receivable in payment thereof.

Section 198, which contains the exception to this method of payment, permits a "provisional payment" of duties to be made by certified check. This exception, however, specifically provides that payment by certified check does not satisfy the "obligation to make ultimate payment" until the certified check has been "duly paid."

Specifically, section 198 states that:

> No person, however, who may be indebted to the United States on account of duties on imports who shall have tendered a certified check or checks as *provisional payment* for such duties or taxes, in accordance with the terms of this section, shall be released from the obligation to make ultimate payment thereof *until such certified check so received has been duly paid* * * *." [Italic added.]

Regulations promulgated by the Secretary of the Treasury authorize other methods for paying duties. See 19 CFR 24.1 (a) and (b). It is significant, however, that neither the statutes nor the regulations authorize the payment of duties by a promissory note which, of course, is merely a written *promise* to pay. See *Don E. Williams Co.* v. *Commissioner of Internal Revenue*, 429 U.S. 569, 582–583, 97 S. Ct. 850 (1977).

Even if a promissory note were an appropriate mode of payment, the mere tender and acceptance of a promissory note does not mean that the duties *have been paid* within the meaning of 28 U.S.C. 1582 (c)(2). By analogy to 19 U.S.C. 198, which permits a certified check to be tendered as provisional payment, the statutory scheme would suggest that a promissory note, at best, could only be considered as a provisional payment. A provisional payment would not satisfy the requirement to make ultimate payment until it has been paid in full, and the funds have been received by the United States. Accordingly, since the United States did not receive funds sufficient fully to discharge plaintiff's liability at the time this action was filed, plaintiff had not made the payment of all liquidated duties as mandated by 28 U.S.C. 1582(c)(2) as a prerequisite to this court's jurisdiction.

Plaintiff contends that the defendant should be estopped from denying that the promissory note served as payment for all six entries since the defendant accepted the note, and, in the normal course of business, accepts payment for duties in forms other than ready money. Judge Miller, however, writing for the Court of Customs and Patent Appeals, has recently noted that "equitable estoppel, even if available in cases involving the Government in its proprietary capacity, is not available against the Government in cases involving the collection or refund of duties on imports." *Air-Sea Brokers, Inc.* v. *United States*, 596 F. 2d 1008, 1011, 66 CCPA —, C.A.D. 1222 (1979).

It is the determination of the court that, for jurisdictional purposes, the promissory note does not constitute payment of the duties owed on the six entries covered by protest Nos. 1401–7–000135 through and including 1401–7–000140.

DUTIES ON PROTEST NO. 1401–7–000141

As stated previously, liquidated duties pertaining to protest No. 1401–7–000141, covering entry No. 115364, were fully paid. Consequently, as to that denied protest, this action may be maintained. See *United States* v. *Novelty Imports, Inc.*, 476 F. 2d 1385, 60 CCPA 131, C.A.D. 1096 (1973).

APPLICATION OF PARTIAL PAYMENT

In addition to paying the duties owed on protest No. 1401-7-000141, plaintiff also paid, before this action was commenced, $7,652.81 on account of the promissory note which was tendered for the amount due on the six remaining denied protests. This is sufficient to discharge the amount of duties owed on one of the six protests, viz, on the first protest, No. 1401-7-000135. To assure its right to sue in this court, plaintiff seeks to have this amount applied to, and, for jurisdictional purposes, treated as the payment of the duties owed on the first of those six protests, i.e., No. 1401-7-000135.

As in nearly all questions neither expressly nor clearly covered by the governing statute, plaintiff's request requires a balancing or weighing of competing considerations. On the one hand, plaintiff, who attempted in good faith to satisfy the statutory prerequisite of payment of duties by tendering a promissory note, seeks judicial review of alleged wrongful government action. This tender was accepted by the appropriate Customs official who canceled the invoice for the duties owed.

On the other hand, as a prerequisite to jurisdiction, the statute requires that the duties owed on the protested entry, which is the subject of an action, have been paid at the time the action was filed.

In order to decide plaintiff's requested application the court must ascertain the legislative intent for requiring the payment of duties, and, whether that intent would be violated by granting the requested relief.

Appropriate guidance may be found in the salutary observation of Judge Rich, who, writing for a unanimous court in *Novelty Imports, Inc., supra*, stated that "statutes should not be given a 'wooden and even perverse construction.' " In *Novelty Imports*, as in the case at bar, the pertinent statute was 28 U.S.C. 1582(c)(2). Surely, citation of authority is not required for the proposition that the statute must be read in proper context so as to effectuate the legislative purpose.

In *Champion Coated Paper Co.* v. *United States*, 24 CCPA 83, 88, T.D. 48411 (1936), the question presented before the Court of Customs and Patent Appeals was whether it was "a condition precedent to appellant's right of recovery that it pay to the collector the sum demanded as a result of his reliquidation of the drawback entries." If payment was a condition precedent, since appellant had not paid, the protest had been properly dismissed by the Customs Court. In order to determine that question, the appellate court examined the statutes pertaining to consumption entries, which, as here, required the payment of duties as a precondition to the right of protest. The Court of Customs and Patent Appeals affirmed the decision of the

Customs Court, and held that payment of duties was a precondition to the protest.

The reasoning of the court indicates that it reached its decision because, without payment of the duties demanded, the appellant had not been actionably damaged. 24 CCPA at 89. That plaintiff had to be "damaged" or "injured" may be noted from the following quotation of the appellate court from the opinion of the Customs Court:

> The statute contemplates that the importer must have some substantial matter about which he may file a protest. If his merchandise is in bond at the time of liquidation and he is called upon to pay additional duties over those deposited, he must pay them before he can procure delivery. If they have been delivered under bond, then in order to put the Government in a position where it can be protected as well as to show that the importer has been put at a financial disadvantage, he must pay the amount of the duties, etc. 24 CCPA at 88.

The appellate court also quoted the following significant sentence from the decision of the Customs Court:

> The importer is here in a case wherein he has not, so far as we can see, been in any manner injured, nor has any property been taken from him, nor have any of his rights been invaded such as would give him any standing in this court. Ibid.

The rationale of the *Champion Coated Paper* opinions indicates that the application of the $7,652.81 for jurisdictional purposes, as payment of duties on the entry covered by protest No. 1401-7-000135, would not be inconsistent with the payment requirement under 28 U.S.C. 1582(c)(2). The $7,652.81 payment not only serves to put the Government in a position where it can be protected, but also establishes that the importer has been put at a financial disadvantage and has been actionably damaged.

At the time the $7,652.81 payment was made, the parties may have treated it as partial payment on the total amount due on the invoices for all six entries. Nevertheless, for jurisdictional purposes in this action, there is no valid reason why that payment cannot be applied to satisfy in full the amount owed on the first of the six entries. Since, as to denied protest No. 1401-7-000135, "all liquidated duties * * * have been paid," the jurisdictional requirement of the statute has been fulfilled.

In summary, it is the determination of the court that the summons in this action is deemed filed as of the date of the certified mail receipt postmark, February 12, 1979, which is within the period prescribed by 28 U.S.C. 2631(a)(1).

As to the seven denied protests included within that summons, the court determines further that, for purposes of 28 U.S.C. 1582(c)(2),

the liquidated duties on the entries covered by protest Nos. 1401-7-000141 and 1401-7-000135 have been paid. Hence, as to these protests, they are to be severed, and the action continued.

As to the entries covered by the five remaining protests included in the summons, i.e., protest Nos. 1401-7-000136 through and including 1401-7-000140, since the liquidated duties on these protests have not been paid, the defendant's motion to dismiss is granted.

Decisions of the United States Customs Court

Abstracts

Abstracted Protest Decisions

DEPARTMENT OF THE TREASURY, *April 21, 1980.*

The following abstracts of decisions of the United States Customs Court at New York are published for the information and guidance of officers of the customs and others concerned. Although the decisions are not of sufficient general interest to print in full, the summary herein given will be of assistance to customs officials in easily locating cases and tracing important facts.

ROBERT E. CHASEN,
Commissioner of Customs.

DECISION NUMBER	JUDGE & DATE OF DECISION	PLAINTIFF	COURT NO.	ASSESSED	HELD	BASIS	PORT OF ENTRY AND MERCHANDISE
				Par. or Item No. and Rate	Par. or Item No. and Rate		
P80/58	Maletz, J. April 16, 1980	Shayne Knitwear, Inc.	77-5-00857	Item 382.78 25¢ per lb. + 32.5% (blouses and pants) Item 791.75 6% (jackets)	Item 791.75 6% Dutiable as entireties on basis of export value; said value is invoice unit price	J. C. Penney Purchasing Corporation v. U.S. (C.D. 4671)	New York Ladies 3-piece suits; entireties
P80/59	Newman, J. April 16, 1980	Uniroyal, Inc., c/o A. N. Deringer, Inc.	78-1-00009	Item 657.20 9.5%	Item 772.65 4%	Summary judgment	Champlain-Rouses Point (Ogdensburg) Hose of rubber with attached fittings

Decisions of the United States Customs Court

Abstracts

Abstracted Reappraisement Decisions

DECISION NUMBER	JUDGE & DATE OF DECISION	PLAINTIFF	COURT NO.	BASIS OF VALUATION	HELD VALUE	BASIS	PORT OF ENTRY AND MERCHANDISE
R80/107	Re, C. J. April 15, 1980	CBS Imports Corp.	74-7-01733, etc.	Export value	Appraised values shown on entry papers less additions included to reflect currency revaluation	C.B.S. Imports Corp. v. U.S. (C.D. 4739)	Los Angeles Various articles
R80/108	Re, C. J. April 15, 1980	Impecco Ltd.	74-4-01064, etc.	Export value	Appraised values shown on entry papers less additions included to reflect currency revaluation	C.B.S. Imports Corp. v. U.S. (C.D. 4739)	New York Various articles
R80/109	Re, C. J. April 15, 1980	Kenton Textile Co., Inc.	73-2-00345, etc.	Export value	Appraised values shown on entry papers less additions included to reflect currency revaluation	C.B.S. Imports Corp. v. U.S. (C.D. 4739)	New York Various articles

DECISION NUMBER	JUDGE & DATE OF DECISION	PLAINTIFF	COURT NO.	BASIS OF VALUATION	HELD VALUE	BASIS	PORT OF ENTRY AND MERCHANDISE
R80/110	Re, C. J. April 15, 1980	Irving W. Rice Co., Inc.	73-1-00056, etc.	Export value	Appraised values shown on entry papers less additions included to reflect currency revaluation	C.B.S. Imports Corp. v. U.S. (C.D. 4739)	New York Various article
R80/111	Ford, J. April 15, 1980	B & K Instruments, Inc.	R67/8683, etc.	Export value	Invoice unit prices less, where applicable, the items specified on invoices as saved packing	Agreed statement of facts	Cleveland Instruments
R80/112	Richardson, J. April 15, 1980	A. W. Fenton Co., Inc.	R65/4139, etc.	Export value	1,976.25, 2,906.25, 5,366.90, Danish Kroner, net packed, less cost of packing saved as indicated on invoice	The A. W. Fenton Co., Inc. v. U.S. (R.D. 11755)	Cleveland Instruments
R80/113	Ford, J. April 16, 1980	B & K Instruments, Inc.	R69/13568, etc.	Export value	Invoice unit prices less, where applicable, items specified on invoices as saved packing	Agreed statement of facts	Cleveland Instruments

R80/114	Richardson, J. April 16, 1980	The A. W. Fenton Co., Inc.	R65/4144, etc.	Export value	Invoiced unit prices less, where applicable, a proportionate part of items specified on invoices as saved packing, as set forth on schedule B attached to decision and judgment	Agreed statement of facts	Cleveland Instruments
R80/115	Watson, J. April 16, 1980	United Silver & Cutlery Co.	R63/6796, etc.	Export value	Appraised unit values less 7.5%, net packed	Agreed statement of facts	Los Angeles Porcelainware platter saucers, plates, etc.

International Trade Commission Notices

Investigations by the U.S. International Trade Commission

DEPARTMENT OF THE TREASURY

The appended notices relating to investigations by the U.S. International Trade Commission are published for the information of Customs officers and others concerned.

R. E. CHASEN,
Commissioner of Customs.

In the Matter of CERTAIN APPARATUS FOR THE CONTINUOUS PRODUCTION OF COPPER ROD	Investigation No. 337–TA–52

Proceeding Concerning Advisory Opinion

I. BACKGROUND

On April 2, 1980, in a letter to the Secretary of the Commission, Fried. Krupp GmbH and Krupp International, Inc. (hereinafter Krupp or the petitioner), asked the Commission for an advisory opinion regarding compliance of the design of a copper rod system, which it proposes to import and sell in the United States, with the cease and desist orders issued by the Commission on November 23, 1979, in the above-captioned case.

II. ACTION

The Commission has determined that Krupp's request raises questions appropriate for an advisory opinion. The Commission will therefore accept written submissions from complainant and other respondents in the case below, the Commission investigative attorney, and from any other person with an interest sufficient to support intervention in a section 337 investigation under section 210.6 (hereinafter

the respondents), on the question of whether Krupp's proposed system would violate the cease and desist orders. However, the Commission's action today should not be construed as precedent for future requests for advisory opinions. The Commission will consider public comments regarding advisory opinions in conjunction with its proposed amendments to the section 337 rules (45 F.R. 24192, April 9, 1980) and will promulgate any advisory opinion rules only after full consideration of public comments.

The letters and submissions of Krupp regarding the advisory opinion and other confidential information regarding the proposed system will be available to counsel for all persons participating in this proceeding, subject to protective order.

Within 20 days after the issuance of this notice all written submissions are due from the respondents. Petitioner may file a reply to respondents' submissions within 10 days of the service of the responses.

Upon receipt of all written submissions, the Commission may in its discretion allow oral arguments, after giving notice to petitioner and respondents.

By order of the Commission.

Issued: April 28, 1980.

KENNETH R. MASON,
Secretary.

(603-TA-6)

STEEL JACKS FROM CANADA

Notice of Preliminary Investigation

Notice is hereby given that on April 23, 1980, the U.S. International Trade Commission voted to institute a preliminary investigation under section 603 of the Trade Act of 1974 (19 U.S.C. 2482) to investigate whether imports of steel jacks from Canada are the subject of a combination or conspiracy to fix prices at unfairly low levels for the purpose of restraining or monopolizing trade and commerce in the United States.

Specifically, the Commission staff has been directed to gather the following factual information relative to questions raised by a complaint (docket 647) filed on March 24, 1980, by Bloomfield Manufacturing Co., Inc., of Bloomfield, Ind.:

(1) Prices charged by J. C. Hallman Manufacturing Co., Ltd., Ontario, Canada, to its distributors in the United States, American

Gage & Manufacturing Co., Wauseon, Ohio, and A. H. Bottorff Co., St. Joseph, Mo.;

(2) All other relevant costs of these importer/distributors for such jacks;

(3) Prices charged to U.S. customers by these importer/distributors;

(4) The nature of any written or oral arguments, if any, between Hallman and its U.S. distributors and/or any agreement between such importer/distributors relating to pricing levels, advertising, or labeling of the country of origin on such jacks.

(5) The costs of production for these steel jacks by the Canadian manufacturer, J. C. Hallman Manufacturing Co., Ltd.

The Commission staff has been directed to submit its report and recommendations regarding the above matters to the Commission no later than June 23, 1980.

By order of the Commission.

Issued: April 28, 1980.

KENNETH R. MASON,
Secretary.

In the Matter of CERTAIN ANAEROBIC IMPREGNATING COMPOSITIONS AND COMPONENTS THEREFOR	Investigation No. 337-TA-71

Order Denying Respondent's Motion for Leave to File a Response to Complainant's Exceptions to Recommend Determination

Having reviewed and considered motion docket No. 71-44 wherein respondents Ultraseal America, Inc. et al., request leave to file a response to complainant Loctite's exceptions to the presiding officer's recommended determination issued on March 12, 1980, THE COMMISSION HEREBY ORDERS THAT—

(1) The motion of respondents Ultraseal America, Inc., et al., is denied; and

(2) The Secretary serve a copy of this Commission order upon each party of record to this investigation.

By order of the Commission.

Dated: April 23, 1980.

KENNETH R. MASON,
Secretary.

Rehearing Motion Filed

APRIL 8, 1980

RSMC Inc. *v.* United States, Court No. 77-4-00572.—HOUSEHOLD ARTICLES—CHAMPAGNE GOBLETS.—C.D. 4847. Motion by plaintiff.

Index

U.S. Customs Service

Treasury decisions:	T.D. No.
Bonds: Carrier	80–115
Bonds: Consolidated aircraft	80–110
Cotton textile products—restriction on entry—Brazil	80–112
Cotton, wool and manmade fiber textile products—restriction on entry—Haiti	80–113
Cotton, wool and manmade fiber apparel products—restriction on entry—Indonesia	80–114
Cotton textile products—restriction on entry—Dominican Republic	80–117
Cotton and manmade fiber apparel products—restriction on entry	80–118
Customs Regulations amended—new section 6.3a, entry and clearance; Cuba	80–116
Synopsis of drawback decisions	80–111
Pneumatic tools	80–111–A
Generators, vibration	80–111–B
Dipyridamol raw, dipyridamol pure, and dipyridamol tosylate	80–111–C
Clocks, decorative wall	80–111–D
Bags	80–111–E
Irgasan DP–300	80–111–F
Track groups for excavator undercarriages	80–111–G
Blades, combustion turbine	80–111–H
Data processing equipment, electronic	80–111–I
Titanium sheet, wire rod, coil (skelp), cropped ends	80–111–J
Generator sets	80–111–K
Organs, electronic	80–111–L
Hydraulic cylinders	80–111–M
Lens, contact	80–111–N
Panels, wall/ceiling	80–111–O
Vessels	80–111–P
LPG tanks	80–111–Q
Steel sheet, stucco embossed galvanized	80–111–R
Laser systems, finished	80–111–S
Semiconductor devices	80–111–T
Refrigeration units, transport	80–111–U–V
Steel coils	80–111–W
Heat exchangers (superchangers)	80–111–X
Car bodies, machined	80–111–Y
Dipyridamol and its salts	80–111–Z

Customs Court

Action, time to commence; jurisdiction, C.D. 4853
Commencement of action:
    Customs Court Rules, C.D. 4853
    Filing by mail, C.D. 4853
    Summons mailed to court, C.D. 4853
Construction:
    Code of Federal Regulations, title 19:
        Sec. 24.1(a), C.D. 4853
        Sec. 24.1(b), C.D. 4853
    Customs Courts Act of 1970, C.D. 4853
    Rules of U.S. Customs Court:
        Rule 3.2, C.D. 4853
        Rule 3.2(b), C.D. 4853
        Rule 3.2(e), C.D. 4853
    United States Code:
        Title 19:
            Sec. 197, C.D. 4853
            Sec. 198, C.D. 4853
            Sec. 1515, C.D. 4853
        Title 28:
            Sec. 1582(c)(2), C.D. 4853
            Sec. 2631(a)(1), C.D. 4853
Customs Court Rules, commencement of action, C.D. 4853
Dumping duties, golf carts, C.D. 4853
Equitable estoppel, C.D. 4853
Estoppel; promissory note, acceptance of, C.D. 4853
Filing by mail; commencement of action, C.D. 4853
Golf carts; dumping duties, C.D. 4853
Jurisdiction:
    Action, time to commence, C.D. 4853
    Lack of, C.D. 4853
Lack of jurisdiction; motion to dismiss granted in part, C.D. 4853
Mail, filing by, C.D. 4853
Motion to dismiss:
    For untimeliness, C.D. 4853
    Granted in part; lack of jurisdiction, C.D. 4853
Motion to have record corrected, C.D. 4853
Multiple protests; partial payment of promissory note, C.D. 4853
Partial payment of promissory note:
    Covering multiple protests; payment of duties, C.D. 4853
    Multiple protests, C.D. 4853
Payment of duties:
    Partial payment of promissory note covering multiple protests, C.D. 4853
    Promissory note, C.D. 4853
Promissory note:
    Acceptance of; estoppel, C.D. 4853
    Payment of duties, C.D. 4853
Rehearing motion applied for (p. —); household articles; champagne goblets

Summons:
Filing by mail, C.D. 4853
Mailed to court; commencement of action, C.D. 4853
Time to commence action, C.D. 4853
Untimellness, motion to dismiss for, C.D. 4853
Words and phrases; partial payment, C.D. 4853

MAY 20 1980
Stm 950-D
T1.11/3:14/21

Customs Bulletin

Regulations, Rulings, Decisions, and Notices concerning Customs and related matters

and Decisions

of the United States Court of Customs and Patent Appeals and the United States Customs Court

CONTIN
318-662
copies 350

Vol. 14 | MAY 21, 1980 | No. 21

9247

This issue contains

T.D. 80-119 through 80-122
C.A.D. 1245 and 1246
Protest abstracts P80/60 through P80/62
Reap. abstracts R80/116 through R80/126
International Trade Commission Notice

THE DEPARTMENT OF THE TREASURY
U.S. Customs Service

NOTICE

The abstracts, rulings, and notices which are issued weekly by the U.S. Customs Service are subject to correction for typographical or other printing errors. Users may notify the U.S. Customs Service, Logistics Management Division, Washington, D.C. 20229, of any such errors in order that corrections may be made before the bound volumes are published.

For sale by the Superintendent of Documents, U.S. Government Printing Office, Washington, D.C. 20402. Price: $1.30 (single copy domestic); $1.65 (single copy foreign). Subscription price: $65.00 a year domestic; $81.25 a year foreign.

U.S. Customs Service

Treasury Decisions

(T.D. 80–119)

Reimbursable Services—Excess Cost of Preclearance Operation

DEPARTMENT OF THE TREASURY,
OFFICE OF THE COMMISSIONER OF CUSTOMS,
Washington, D.C., May 1, 1980.

Notice is hereby given that pursuant to section 24.18(d), Customs Regulations (19 CFR 24.18(d)), the biweekly reimbursable excess costs for each preclearance installation are determined to be as set forth below and will be effective with pay period beginning May 18, 1980.

Installation:	*Biweekly excess cost*
Montreal, Canada	$17, 961
Toronto, Canada	34, 727
Kindley Field, Bermuda	5, 936
Nassau, Bahama Islands	17, 350
Vancouver, Canada	10, 674
Winnipeg, Canada	1, 993
Freeport, Bahama Islands	13, 517
Calgary, Canada	6, 537
Edmonton, Canada	4, 857

MITCHELL A. LEVIN
(For Jack T. Lacy Comptroller).

(T.D. 80–120)

Customhouse Broker License—Suspension

Suspension with prejudice of customhouse broker license, No. 5115

DEPARTMENT OF THE TREASURY,
OFFICE OF THE COMMISSIONER OF CUSTOMS,
Washington, D.C.

Notice is hereby given that the Commissioner of Customs on March 19, 1980, pursuant to section 641, Tariff Act of 1930, as

amended (19 U.S.C. 1641), and part 111 of the Customs Regulations, as amended, and upon the specific request of Customhouse broker Christopher Baretela, Elmont, N.Y., in response to the notice to show cause and statement of charges against him dated October 17, 1979, suspended with prejudice for a period ot 3 weeks individual Customhouse broker's license, No. 5115 issued to him January 27, 1975 for Customs District of New York N.Y. The Commissioner's decision is effective as of May 19, 1980.

Dated: March 19, 1980.

ROBERT E. CHASEN,
Commissioner of Customs.

(T.D. 80–121)

Bonds

Approval and discontinuance of bonds on Customs form 7587 for the control of instruments of international traffic of a kind specified in section 10.41a of the Customs Regulations

Bonds on Customs form 7587 for the control of instruments of international traffic of a kind specified in section 10.41a of the Customs Regulations have been approved or discontinued as shown below. The symbol "D" indicates that the bond previously outstanding has been discontinued on the month, day, and year represented by the figures which follow. "PB" refers to a previous bond, dated as represented by the figures in parentheses immediately following which has been discontinued. If the previous bond was in the name of a different company or if the surety was different, the information is shown in a footnote at the end of the list.

Dated: May 2, 1980.

Name of principal and surety	Date of bond	Date of approval	Filed with district director/area director/amount
Alpha-Omega Services, Inc., 16220 Gundry Ave., Paramount, CA; St. Paul Fire & Marine Ins. Co.	Mar. 24, 1980	Mar. 25, 1980	New Orleans, LA; $10,000
Alumina Partners of Jamaica, 100 West 10th St., Wilmington, DE; Nat'l Union Fire Insurance Company of Pittsburgh, PA; (PB 12/6/76) D 2/12/80 [1]	Jan. 15, 1980	Feb. 26, 1980	New Orleans, LA; $10,000

Footnotes at end of table.

Name of principal and surety	Date of bond	Date of approval	Filed with district director/area director/amount
American Oceanic Shipping Corp., 50 Broad St., New York, NY; Old Republic Ins. Co.	Mar. 20, 1980	Mar. 21, 1980	New York Seaport; $10,000
Caribe Shipping Co., Inc., P.O. Box 3267, San Juan, PR; Antilles Ins. Co. (PB 10/14/71) D 1/28/80 [2]	Jan. 28, 1980	Jan. 29, 1980	San Juan, PR; $10,000
Clou Containers Inc., 17 Battery Place, New York, NY; Old Republic Ins. Co.	Mar. 17, 1980	Mar. 18, 1980	New York Seaport; $10,000
Contract Marine Carriers Inc., 1201 Corbin St., Port Elizabeth, NJ; American Motorists Ins. Co. D 3/3/80	Feb. 2, 1979	Feb. 7, 1979	New York Seaport; $10,000
Contract Marine Carriers Inc., 23 Broad St., Charleston, SC; American Manufacturers Mutual Ins. Co.	Jan. 31, 1980	Feb. 1, 1980	Charleston, SC; $10,000
Contrans (USA) Inc., Agents for Contrans GMBH, 7 Hanover Square, New York, NY; Hartford Accident & Indemnity	Jan. 25, 1980	Feb. 8, 1980	New York Seaport; $10,000
Del Monte Corp., One Market Plaza, San Francisco, CA; American Home Assurance Co. (PB 4/1/74) D 4/1/80 [3]	Apr. 1, 1980	Apr. 1, 1980	Buffalo, NY; $10,000
East Coast Overseas Corp., 80 Broad St., New York, NY; St. Paul Fire & Marine Ins. Co. D 3/4/80	May 2, 1967	May 4, 1967	New York Seaport; $10,000
Gulf & Eastern Steamship & Chartering Corp., 1226 ITM Bldg., New Orleans, LA; St. Paul Fire & Marine Ins. Co.	Apr. 22, 1980	Apr. 22, 1980	New Orleans, LA; $10,000
Intercontinental Fibres Inc., 350 Fifth Ave., New York, NY; St. Paul Fire & Marine Ins. Co. D 1/30/80	Oct. 19, 1970	Oct. 20, 1970	New York Seaport; $30,000
International Gulf Chartering, Inc., 716 Cotton Exchange Bldg., Houston, TX; St. Paul Fire & Marine Ins. Co.	Mar. 4, 1980	Mar. 19, 1980	Houston, TX; $50,000
Kanga Exporting Co., 2165 Lake Dr., P.O. Box 3812, Cocoa, FL; U.S. Fidelity & Deposit Co.	Jan. 22, 1980	Mar. 3, 1980	Tampa, FL; $10,000
Logan Steamship Agency, Inc., 250 N. Water St., P.O. Box 2281, Mobile, AL; St. Paul Fire & Marine Ins. Co.	Apr. 9, 1980	Apr. 10, 1980	Mobile, AL; $10,000
McDonnell Douglas Canada Ltd., P.O. Box 6013, Toronto AMF, Ontario, Canada; Safeco Insurance Company of America (PB 1/26/71) D 4/2/80 [4]	Jan. 26, 1980	Mar. 10, 1980	Detroit, MI; $10,000
Nissho-Iwai American Corp., 80 Pine St., New York, NY; The Travelers Indemnity D 2/4/80	Mar. 2, 1970	Mar. 9, 1970	New York Seaport; $10,000
Philipp Brothers Chemicals Inc., 10 Columbus Circle, New York, NY; American Motorists Insurance Co.	Feb. 7, 1980	Feb. 7, 1980	New York Seaport; $10,000

Footnotes at end of table.

Name of principal and surety	Date of bond	Date of approval	Filed with district director/area director/amount
The Puerto Rico Maritime Shipping Authority (a PR Corp.) and its subsidiaries International Marine Management Inc., and Puerto Rico Marine Management Inc. (both DE Corps.), GPO Box 71105, San Juan, PR; American Motorists Insurance Co.	Mar. 29, 1980	Mar. 31, 1980	New York Seaport; $10,000
Reiters Beer Distributors, Inc., 67 Jay St., Brooklyn, NY; American Motorists Ins. Co. D 4/14/80	May 12, 1976	Apr. 30, 1976	New York Seaport; $10,000
Special Shipping, Inc., Suite 500, 609 Fannin Bldg., Houston, TX; Ohio Casualty Ins. Co.	Jan. 10, 1980	Jan. 20, 1980	Houston, TX; $10,000
Stauffer Chemical Co., Exit 18, Sherwood Island, Westport, CT; Federal Ins. Co. (PB 4/24/73) D 4/24/80 [5]	Apr. 24, 1980	Mar. 4, 1980	New York Seaport; $10,000
Uniroyal Inc., Middlebury, CT; American Home Assurance Co. (PB 4/15/74) D 4/15/80 [6]	Mar. 10, 1980	Mar. 31, 1980	New York Seaport; $10,000
Wheaton Van Lines, Inc., 2525 E. 56th St., Indianapolis, IN; Commercial Union Ins. Co. D 3/4/80	Mar. 4, 1980	Mar. 8, 1968	New York Seaport; $10,000

[1] Surety is Insurance Co. of North America.
[2] Surety is Puerto Rican-American Insurance Co.
[3] Surety is Peerless Insurance Co.
[4] Principal is Douglas Aircraft Co. of Canada Ltd.; Surety is Federal Insurance Co.
[5] Surety is Peerless Insurance Co.
[6] Surety is Federal Insurance Co.

BON-3-10

ALFRED G. SCHOLLE,
Director,
Carriers, Drawback and Bonds Division.

(T.D. 80-122)

Synopses of Drawback Decisions

The following are synopses of drawback rates issued July 6, 1979, to March 28, 1980, inclusive, pursuant to sections 22.1 through 22.5, inclusive, Customs Regulations.

In the synopses below are listed for each drawback rate approved under 19 U.S.C. 1313(b), the name of the company, the specified articles on which drawback is authorized, the merchandise which will be used to manufacture or produce these articles, the factories where the work will be accomplished, the date the statement was signed, the

basis for determining payment, the Regional Commissioner to whom the rate was forwarded, and the date on which it was forwarded.

(DRA-1-09)

Dated: May 2, 1980.

ALFRED G. SCHOLLE,
Director,
Carriers, Drawback and Bonds Division.

(A) Company: Arizona Chemical Co.
Articles: Polyterpene resins.
Merchandise: D'Limonene.
Factory: Panama City, Fla.
Statement signed: May 29, 1979.
Basis of claim: Used in, less valuable waste.
Rate forwarded to Regional Commissioner of Customs: New York, February 14, 1980.

(B) Company: Bataco Industries, Inc.
Articles: Barbed tape concertina.
Merchandise: Hot dipped galvanized steel sheet.
Factory: Miami, Fla.
Statement signed: September 14, 1979.
Basis of claim: Used in, less valuable waste.
Rate forwarded to Regional Commissioner of Customs: Miami, March 5, 1980.
Revokes: T.D. 77-292-C.

(C) Company: Bunte Candies, Inc.
Articles: Candy products.
Merchandise: Hard refined sugar.
Factories: Oklahoma City, Okla. (2).
Statement signed: December 4, 1979.
Basis of claim: Used in.
Rate forwarded to Regional Commissioner of Customs: New York, March 3, 1980.

(D) Company: Chelsea Industries Inc.
Articles: Combined finished upper materials and finished bindings.
Merchandise: Greige cotton piece goods and dyed cotton piece goods.
Factory: Chelsea, Mass.
Statement signed: January 4, 1980.
Basis of claim: Appearing in.
Rate forwarded to Regional Commissioner of Customs: Boston, February 22, 1980.

(E) Company: Chemplast, Inc.
Articles: Polytetrafluoroethylene (PTFE) rods, sheets, tapes, tubes in finished and semifinished form; machined and farbicated laboratory ware of PTFE.
Merchandise: Polytetrafluoroethylene (PTFE) powder.
Factories: Wayne, Hawthorne, Clark, and Cranford, N.J.; Acton, Mass.; Van Nuys, Calif.
Statement signed: January 23, 1980.
Basis of claim: Appearing in.
Rate forwarded to Regional Commissioner of Customs: New York, February 20, 1980.

(F) Company: Cranston Print Works Co.
Articles: Bleached, dyed, and/or printed piece goods.
Merchandise: Greige piece goods.
Factories: Cranston, R.I.; Webster, Mass.; Fletcher, N.C.
Statement signed: September 21, 1978.
Basis of claim: Used in, less valuable waste.
Rate forwarded to Regional Commissioner of Customs: New York, February 14, 1980.
Revokes: T.D. 55502–D.

(G) Company: Crest Steel Corp.
Articles: Steel in plate or shapes.
Merchandise: Hot rolled steel coil.
Factory: Carson, Calif.
Statement signed: June 29, 1979.
Basis of claim: Appearing in.
Rate forwarded to Regional Commissioner of Customs: Los Angeles, January 22, 1980.

(H) Company: Dana Corp.
Articles: Automotive gear frames (frames) and parts thereof.
Merchandise: Siderail members, cross members, and hot rolled steel sheet/strip.
Factories: Ecorse, Mich.; Reading, Pa.
Statement signed: September 10, 1979.
Basis of claim: Appearing in.
Rate forwarded to Regional Commissioner of Customs: New York, February 5, 1980.

(I) Company: Data General Corp.
Articles: Computer systems; computer subsystems; peripheral computer equipment.

Merchandise: Printed circuit board products.
Factories: Southboro, Mass.; Westbrook, Maine; Cary, N.C.; Portsmouth, N.H.; Austin, Tex.
Statement signed: January 29, 1980.
Basis of claim: Appearing in.
Rate forwarded to Regional Commissioner of Customs: San Francisco, February 22, 1980.
Revokes: T.D. 80–62–G.

(J) Company: E. I. du Pont de Nemours & Co.
Articles: Du Pont TEL aviation antiknock and du Pont TEL motor mix antiknock.
Merchandise: Motor mix ISF.
Factory: Deepwater, N.J.
Statement signed: December 10, 1979.
Basis of claim: Appearing in.
Rate forwarded to Regional Commissioner of Customs: Baltimore, January 25, 1980.
Revokes: T.D. 77–102–E.

(K) Company: Ethyl Corp.
Articles: 2-methyl-6-ethyl aniline (MEA).
Merchandise: Ortho toluidine.
Factory: Pasadena, Tex.
Statement signed: January 29, 1979.
Basis of claim: Appearing in.
Rate forwarded to Regional Commissioner of Customs: New Orleans, February 25, 1980.

(L) Company: Fedders Corp.
Articles: Refrigerating, heating and air-conditioning systems, subassemblies and components, room air-conditioners, and automotive radiators.
Merchandise: Copper tubing; stainless steel sheet, strip or coil; brass sheet or coil; aluminized steel sheet, strip or coil; galvanized steel sheets in coil and cut lengths; cold rolled carbon steel, coiled and flat; hot rolled carbon steel flat sheet; aluminum sheets and coils; brass tubing; copper strip; and brass strip.
Factories: Edison, N.J., Effingham, Ill., Buffalo, N.Y. (2).
Statement signed: June 1, 1979.
Basis of claim: Appearing in.
Rate forwarded to Regional Commissioner of Customs: New York, February 28, 1980.

(M) Company: The Kendall Co.
Articles: Bleached and/or dyed and/or mercerized piece goods.
Merchandise: Piece goods.
Factory: Bethune, S.C.
Statement signed: August 30, 1979.
Basis of claim: Used in, less valuable waste.
Rate forwarded to Regional Commissioner of Customs: New York, February 6, 1980.

(N) Company: Koehring Co.
Articles: Lattice-boom cranes, hydraulic cranes, hydraulic excavators, vibratory compactors, soil stabilizers, water well drilling equipment, trenchers, farm equipment, and parts thereof.
Merchandise: Steel plate and steel sheet.
Factories: Various factories as listed in manufacturer's statement.
Statement signed: October 12, 1979.
Basis of claim: Appearing in.
Rate forwarded to Regional Commissioner of Customs: Chicago, March 28, 1980.
Revokes: Unpublished authorization letter dated August 14, 1979.

(O) Company: Lubrizol Corp.
Articles: Intermediate lubricant additive and finished lubricant additives.
Merchandise: Ester amide.
Factories: Painesville, Ohio; Houston and Pasadena, Tex.
Statement signed: July 2, 1979.
Basis of claim: Used in.
Rate forwarded to Regional Commissioner of Customs: Chicago, February 25, 1980.

(P) Company: Nabisco Confections, Inc.
Articles: Confectionery items.
Merchandise: Hard refined and liquid sugar.
Factories: Cambridge and Mansfield, Mass.; Los Angeles, Calif.
Statement signed: June 15, 1979.
Basis of claim: Appearing in.
Rate forwarded to Regional Commissioner of Customs: New York, March 5, 1980.

(Q) Company: Pepsi-Cola and National Brand Beverages Ltd.
Articles: Canned and bottled carbonated and noncarbonated beverages.
Merchandise: Pepsi-Cola syrups, flavoring syrups, and concentrates; hard refined sugar; liquid refined sugar; liquid refined invert sugar.

Factory: Paterson, N.J.
Statement signed: March 13, 1979.
Basis of claim: Used in.
Rate forwarded to Regional Commissioner of Customs: New York, July 6, 1979.

(R) Company: The Procter & Gamble Manufacturing Co.
Articles: Synthetic detergents.
Merchandise: Alkyl benzene.
Factories: Quincy, Mass.; Staten Island, N.Y.; Baltimore, Md.; Augusta, Ga.; Cincinnati, Ohio; Chicago, Ill.; Sacramento and Long Beach, Calif.; Alexandria, La.; Dallas, Tex.; Kansas City, Kans.; St. Louis, Mo.
Statement signed: September 14, 1979.
Basis of claim: Used in.
Rate forwarded to Regional Commissioner of Customs: Boston, March 11, 1980.

(S) Company: Reading Alloys, Inc.
Articles: Ferrovanadium carbide nitrogen.
Merchandise: Fused flaked vanadium pentoxide.
Factory: Robesonia, Pa.
Statement signed: February 19, 1980.
Basis of claim: Appearing in.
Rate forwarded to Regional Commissioner of Customs: Baltimore, February 28, 1980.

(T) Company: The S. W. Shattuck Chemical Co., Inc.
Articles: Molybdic oxide, technical or chemical grade; other molybdic products.
Merchandise: Molybdenum concentrates; ammonium molybdate; molybdenum bearing spent catalyst.
Factory: Denver, Colo.
Statement signed: October 5, 1979.
Basis of claim: Appearing in.
Rate forwarded to Regional Commissioner of Customs: New York, February 12, 1980.
Revokes: T.D. 73-124-J and T.D. 76-319-J.

(U) Company: Spartan Mills.
Articles: Piece goods—bleached, mercerized, finished, dyed.
Merchandise: Greige piece goods.
Factories: Gaffney and Startex, S.C.; Dover, Ga.
Statement signed: August 28, 1979.
Basis of claim: Appearing in.

Rate forwarded to Regional Commissioners of Customs: Baltimore, Boston, and Miami, March 7, 1980.

(V) Company: Texas Citrus Exchange.
Articles: Canned grapefruit juice, frozen concentrated grapefruit juice, and concentrated grapefruit juice that meets customer specifications.
Merchandise: Concentrated grapefruit juice for manufacturing.
Factories: Mission and Harlingen, Tex.
Statement signed: December 18, 1979.
Basis of claim: Used in.
Rate forwarded to Regional Commissioners of Customs: Houston and Los Angeles, January 28, 1980.

(W) Company: Western Bottling Co., Inc.
Articles: Still and carbonated beverages.
Merchandise: Liquid invert refined sugar.
Factory: Spokane, Wash.
Statement signed: January 28, 1980.
Basis of claim: Used in.
Rate forwarded to Regional Commissioner of Customs: San Francisco, February 20, 1980.

(X) Company: Will-Flow Corp.
Articles: Stainless steel tanks of various types and parts thereof.
Merchandise: Cold rolled stainless steel sheet.
Factory: Charlevoix, Mich.
Statement signed: November 19, 1979.
Basis of claim: Appearing in.
Rate forwarded to Regional Commissioner of Customs: New York, February 15, 1980.

(Y) Company: Wilmington Finishing Co.
Articles: Bleached and/or dyed piece goods.
Merchandise: Piece goods.
Factory: Wilmington, Del.
Statement signed: November 12, 1979.
Basis of claim: Used in, less valuable waste.
Rate forwarded to Regional Commissioner of Customs: New York, March 11, 1980.

(Z) Company: World Citrus, Inc.
Articles: Orange juice from concentrate.

Merchandise: Concentrated orange juice for manufacturing and frozen concentrated orange juice.
Factory: Winston-Salem, N.C.
Statement signed: January 7, 1980.
Basis of claim: Used in.
Rate forwarded to Regional Commissioner of Customs: Miami, February 12, 1980.

318-662 O - 80 - 2

Decisions of the United States Court of Customs and Patent Appeals

(C.A.D. 1245)

GENERAL ELECTRIC COMPANY *v.* THE UNITED STATES, No. 79–39

1. CLASSIFICATION OF IMPORTS—CLOCK RADIOS—TSUS ITEM 685.23

Judgment of Customs Court sustaining classification of clock radios as "solid-state (tubeless) radio receivers" under item 685.23 is affirmed.

2. ID.—"WHETHER OR NOT" LANGUAGE

"Whether or not" language in superior heading applicable to items 685.10 through 685.50 is essentially qualifying language implicitly invasive of all the subordinate indented provisions.

3. ID.

"Whether or not" language is distinguishable in principle from a "parts" provision in the superior heading.

4. ID.—COMBINATION ARTICLE

Combination articles covered by item 685.50 are not those created by incorporating a clock in an article such as a radio.

U.S. Court of Customs and Patent Appeals, May 1, 1980

Appeal from U.S. Customs Court, C.D. 4822

[Affirmed.]

Louis Schneider and *Herbert Peter Larsen* attorneys of record for appellant.

Alice Daniel, Assistant Attorney General, *David M. Cohen*, Director, *Joseph I. Liebman*, Attorney in Charge, Field Office for Customs Litigation.

[Oral argument on April 10, 1980 by Herbert Peter Larsen for appellant, and Joseph I. Liebman for appellee.]

Before MARKEY, *Chief Judge*, RICH, BALDWIN, and MILLER, *Associate Judges*, and FORD, *Judge*.[1]

BALDWIN, *Judge*.

[1] This appeal is from the judgment of the U.S. Customs

[1] Hon. Morgan Ford, U.S. Customs Court, sitting by designation.

Court, 83 Cust. Ct., C.D. 4822, 476 F. Supp. 1082 (1979), sustaining the classification of imported merchandise by the U.S. Customs Service under item 685.23, Tariff Schedules of the United States (TSUS). We affirm.

The merchandise, entered from Taiwan in 1971, consists of clock radios comprising solid-state (tubeless) radio receivers in combination with clock movements and dials, and was classified as "solid-state (tubeless) radio receivers" under item 685.23. Appellant urges that the clock radios are combination articles classifiable under item 685.50 for "other."

The relevant portions of the TSUS, as modified by Presidential Proclamation 3822, T.D. 68-9, are as follows:

SCHEDULE 6.—METALS AND METAL PRODUCTS

PART 5.—ELECTRICAL MACHINERY AND EQUIPMENT

	Radiotelegraphic and radiotelephonic transmission and reception apparatus; radiobroadcasting and television transmission and reception apparatus, and television cameras; record players, phonographs, tape recorders, dictation recording and transcribing machines, record changers, and tone arms; all of the foregoing, and any combination thereof, whether or not incorporating clocks or other timing apparatus, and parts thereof:	
	* * * * * * *	
	Other:	
685.23	Solid-state (tubeless) radio receivers	10.4% ad val.
	* * * * * * *	
	Other:	
	* * * * * * *	
685.50	Other	9% ad val.

Additionally the clock movements and dials were constructively separated from the remainder of the merchandise and separately assessed under item 720.02, pursuant to schedule 7, part 2, subpart E, headnote 5, which reads in relevant part:

> 5. *Combination articles containing watch or clock movements.*—A watch or clock movement (and its dial, if any) in a combination article is classifiable under the provision applicable to such combination article, but, in determining the duties on the combination article, the movement (and its dial, if any) shall be constructively separated therefrom and assessed with the same rate as would have applied if it had been imported separately.

Appellant does not contest the separate assessment on the clock movements and dials under item 720.02. The parties agreed there was no justiciable issue over any material fact, and cross-moved for summary judgment. The Customs Court granted the motion for the United States and denied appellant's cross-motion, thus sustaining the classification of the subject merchandise under item 685.23.

After a thorough consideration of the record, briefs, and oral argument, we conclude that there is no reversible error in the decision and opinion of Judge Newman and adopt it as our own.

[2] We agree with the reasoning of Judge Newman that the phrase "whether or not incorporating clocks or other timing apparatus" contained in the superior heading applicable to items 685.10 through 685.50 is essentially qualifying language implicitly invasive of all the subordinate indented provisions by virtue of the immediate antecedent language "all of the foregoing, and any combination thereof."

[3] We further agree that the "whether or not" language is distinguishable in principle from the "parts" provision in the superior heading considered by this court in *United States* v. *Paul M. W. Bruckmann*, 65 CCPA 90, C.A.D. 1211, 582 F. 2d 622 (1978), and that *Bruckmann* did not overrule the case of *Montgomery Ward & Co., Inc.* v. *United States*, 74 Cust. Ct. 125, C.D. 4596 (1975). **[4]** Judge Newman has correctly noted that the combination articles covered by item 685.50 are not those created by incorporating a clock or other timing apparatus in an article such as a radio, but rather are those created by a combination of some of the articles mentioned in the superior heading antecedent to the phrase "and any combination thereof, whether or not incorporating clocks or other timing apparatus."

The decision and judgment of the Customs Court is *affirmed*.

(C.A.D. 1246)

OZEN SOUND DEVICES *v.* THE UNITED STATES, NO. 79-37

1. CLASSIFICATION OF IMPORTS—PARTS OF TOYS—TSUS ITEM 737.95

Judgment of U.S. Customs Court in *Ozen Sound Devices* v. *United States*, 83 Cust. Ct. ——, C.D. 4816, 476 F. Supp. 1078 (1979), which upheld classification of imported merchandise under item 737.95, Tariff Schedules of the United States, as parts of toys, not specifically provided for, is affirmed.

2. ID.—COMMON MEANING OF TERM

To determine whether an article is more than an article included in a particular tariff provision, it is necessary to ascertain common meaning of the term in the provision and to compare it with involved merchandise.

3. ID.

Meaning of term in a tariff provision, when not otherwise defined in TSUS or indicated by legislative history, is common meaning understood in trade and commerce; and court may consult dictionaries, scientific authorities, and other reliable sources of information in ascertaining common meaning.

4. ID.

Practice of considering records to be parts of phonographs was not continued after 1962 enactment of TSUS.

5. ID.—"MORE THAN"

Each case dealing with "more than" issue must be decided on its own facts.

6. ID.—SPECIFIC PROVISION

Item 737.95 has requirements more difficult to satisfy than item 688.40 and is more specific provision.

U.S. Court of Customs and Patent Appeals, May 1, 1980

Appeal from U.S. Customs Court, C.D. 4816

[Affirmed.]

Robert B. Silverman, attorney of record for appellant, *Murray Sklaroff*, of counsel.

Alice Daniel, Assistant Attorney General, *David M. Cohen*, Director, *Joseph I. Liebman*, Attorney in Charge, Field Office for Customs Litigation, *Saul Davis*, of counsel.

[Oral argument on April 10, 1980 by Robert B. Silverman, for appellant and by Saul Davis, for appellee.]

Before MARKEY, *Chief Judge*, RICH, BALDWIN, and MILLER, *Associate Judges*, and FORD,[1] *Judge*.

MILLER, *Judge*.

This is an appeal from the [1] judgment of the U.S. Customs Court in *Ozen Sound Devices* v. *United States*, 83 Cust. Ct. ——, C.D. 4816, 476 F. Supp. 1078 (1979), which upheld the classification of the imported merchandise under item 737.95 of the Tariff Schedules of the United States (TSUS) as parts of toys, not specifically provided for. We affirm.

BACKGROUND

The imported merchandise is a talking mechanism inserted into dolls or other objects to reproduce prerecorded sayings. It includes a turntable, spindle, tone arm assembly, stylus, loudspeaker cone, and a record which is permanently affixed by cement to the turntable and cannot be removed without destroying the article. It is the same

[1] Hon. Morgan Ford, U.S. Customs Court, sitting by designation.

as the merchandise involved in *Mattel, Inc.* v. *United States*, 76 Cust. Ct. 84, C.D. 4639 (1976), except that it is driven by a battery-operated, switch-activated, electric motor, whereas the talking mechanism in *Mattel* was driven by a clock spring and string combination.

Instead of classification under item 737.95,[2] as parts of toys, not specifically provided for, appellant claims that the merchandise is more properly classifiable under item 685.32,[3] as a phonograph, or under item 688.40,[4] as electrical parts of articles, not specifically provided for.

In the Customs Court, appellant moved for judgment on the pleadings, and the Government moved for summary judgment. The court, in granting the Government's motion, stated that, in enacting the Tariff Schedules in 1962, Congress manifested a clear intent to discontinue the prior practice of treating records as parts of phonographs by providing for phonographs and their parts in schedule 6, part 5, item 685.32, while providing for phonograph records in schedule 7, part 2, item 724.25. The court said that classification of appellant's talking mechanism as a phonograph would frustrate that intent. It concluded that the talking mechanism, due to the presence of the essential record portion, is more than or other than the phonographs provided for in item 685.32 and not properly classifiable under that item. The court further concluded that appellant's alternative claim under item 688.40 is not proper, because this court had specifically held that item 737.90 [5] (the predecessor to item 737.95 for parts of toys) is more specific than item 688.40. *Ideal Toy Corp.* v. *United States*, 58 CCPA 9, C.A.D. 996, 433 F. 2d 801 (1970).

OPINION

[2] To determine whether an article is more than an article included in a particular tariff provision, it is necessary to ascertain the common meaning of the term in the provision and to compare it with the involved merchandise. *E. Green & Son (New York), Inc.* v. *United States*, 59 CCPA 31, C.A.D. 1032, 450 F. 2d 1396 (1971). **[3]** The meaning of a term in a tariff provision, when not otherwise defined in the TSUS or indicated by the legislative history, is the common meaning understood in trade and commerce; and the court may consult dictionaries, scientific authorities and other reliable sources of infor-

[2] Schedule 7, part 5, subpart E, item 737.95 provides:

Toys, and parts of toys, not specifically provided for:

* * * * * * *

737.95	Other	17.5% ad val.

[3] Schedule 6, part 5, item 685.32 provides:

685.32	Record players, phonographs, record changers, turntables, and tone arms, and parts of the foregoing	5.5% ad val.

[4] Schedule 6, part 5, item 688.40 provides:

688.40	Electrical articles, and electrical parts of articles, not specifically provided for	5.5% ad val.

[5] On Jan. 1, 1976, item 737.90 was renumbered as item 737.95. T.D. 75-304. Otherwise, the two items are identical.

mation in ascertaining the common meaning. *Schott Optical Glass, Inc.* v. *United States*, 67 CCPA ——, C.A.D. 1239, 612 F. 2d 1283 (1979).

Appellant has cited the following dictionary definitions of "phonograph":

> An instrument for recording, for reproducing, or for recording and reproducing sounds by the transmission of the vibrations of a stylus connected with a diaphragm and in contact with a groove in a record blank or record that is rotated steadily by the action of a spring or by an electric motor. ["Webster's New International Dictionary of the English Language" (1958).]
>
> [A]n instrument for reproducing sounds by means of the vibration of a stylus or needle following a spiral groove on a revolving circular disc or cylinder. "Webster's Third New International Dictionary of the English Language" (1971)].[6]

Appellant argues that a record is an essential component in each of the above definitions and that, accordingly, the talking mechanism meets the definition of phonograph. However, the definitions indicate that a phonograph is an instrument which can produce sounds and that the instrument does not include a record, but merely responds to the action of a record.

Other unrebutted evidence also supports this view. It establishes that complete phonographs, as the term is used commercially, are sold to the public without records and are known as phonographs without the presence of records; and that articles containing both a phonograph instrument and a record element are not sold as phonographs to the public.

Therefore, we conclude that appellant's talking mechanism does not come within the common meaning of phonograph.

We further conclude that the addition of the record to appellant's talking mechanism is of such significance that the talking mechanism cannot be classified under item 685.32.[7] *See The Englishtown Corp.* v. *United States*, 64 CCPA 84, 87, C.A.D. 1187, 553 F. 2d 1258, 1260 (1977). *Cf. Robert Bosch Corp.* v. *United States*, 63 Cust. Ct. 96, 103, C.D. 3881 (1969), citing *Hirsch & Co.* v. *United States*, 4 Ct. Cust. Appls. 82, T.D. 33365 (1913).

With respect to appellant's claim that the talking mechanism should be classified under item 688.40 because that item is more specific than

---

[6] These definitions were cited in the *Mattel* case, *supra* at 88.

[7] [4] Although, as appellant argues, records were considered to be parts of phonographs at an earlier time (*see e.g.*, *Landay Bros.* v. *United States*, 5 Ct. Cust. Appls. 498, T.D. 35151 (1915)), this practice was not continued after the 1962 enactment of TSUS. Appellant also invites our attention to *Decorated Metal Mfg. Co.* v. *United States*, 12 Ct. Cust. Appls. 140, T.D. 40061 (1924) (typewriter ribbon spools held to be parts of typewriters). However, [5] each case dealing with a "more than" issue must be decided on its own facts. *E. Green & Son (New York), Inc.* v. *United States*, *supra* at 34, 450 F. 2d at 1398.

item 737.95,[8] item 737.95 requires that the article belong to a class which possesses a use for amusement of children or adults throughout the United States that predominates over all other uses;[9] whereas, item 688.40 requires only that the article have electrical characteristics. Accordingly, we are persuaded that **[6]** item 737.95 has requirements more difficult to satisfy than item 688.40 and is, therefore, the more specific provision. *United States* v. *Simon Saw & Steel Co.*, 51 CCPA 33, C.A.D. 834 (1964).[10]

In view of the foregoing, the judgment of the Customs Court is *affirmed.*

---

[8] Appellant cites general interpretative rule 10(c), which provides, in relevant part, as follows: "* * * an imported article which is described in two or more provisions of the schedules is classifiable in the provision which most specifically describes it * * *.

[9] See Schedule 7, part 5, subpart E, headnote 2.

[10] For a different reason, this court, in *Ideal Toy Corp.* v. *United States*, 58 CCPA 9, 13, C.A.D. 966, 433 F. 2d 801, 804 (1970), affirmed a Customs Court determination that item 737.90 (the predecessor to item 737.95) prevailed over item 688.40.

Decisions of the United States Customs Court

United States Customs Court
One Federal Plaza
New York, N.Y. 10007

Chief Judge

Edward D. Re

Judges

Paul P. Rao
Morgan Ford
Scovel Richardson
Frederick Landis
James L. Watson
Herbert N. Maletz
Bernard Newman
Nils A. Boe

Senior Judge

Samuel M. Rosenstein

Clerk

Joseph E. Lombardi

Abstracts

Abstracted Protest Decisions

DEPARTMENT OF THE TREASURY, *April 28, 1980.*

The following abstracts of decisions of the United States Customs Court at New York are published for the information and guidance of officers of the Customs and others concerned. Although the decisions are not of sufficient general interest to print in full, the summary herein given will be of assistance to Customs officials in easily locating cases and tracing important facts.

ROBERT E. CHASEN,
Commissioner of Customs.

DECISION NUMBER	JUDGE & DATE OF DECISION	PLAINTIFF	COURT NO.	ASSESSED	HELD	BASIS	PORT OF ENTRY AND MERCHANDISE
				Par. or Item No. and Rate	Par. or Item No. and Rate		
P80/60	Richardson, J. April 22, 1980	Alltransport, Inc.	77-8-01938	Item 708.89 22.5%	Item 708.80 15%	Wild Heerbrugg Instruments, Inc. v. U.S. (C.D. 4767)	New York Microscopy phototubes
P80/61	Richardson, J. April 22, 1980	Alltransport, Inc.	77-11-04673	Item 708.89 22.5%	Item 708.80 15%	Wild Heerbrugg Instruments, Inc. v. U.S. (C.D. 4767)	New York Microscopy phototubes
P80/62	Richardson, J. April 22, 1980	Wild Heerbrugg Instruments, Inc.	77-11-04676	Item 708.89 22.5%	Item 708.80 15%	Wild Heerbrugg Instruments, Inc. v. U.S. (C.D. 4767)	New York Microscopy phototubes

Decisions of the United States Customs Court

Abstracts

Abstracted Reappraisement Decisions

DECISION NUMBER	JUDGE & DATE OF DECISION	PLAINTIFF	COURT NO.	BASIS OF VALUATION	HELD VALUE	BASIS	PORT OF ENTRY AND MERCHANDISE
R80/116	Re, C. J. April 25, 1980	Baytex, Division of Baychem	74-9-02537	Export value	Invoice unit value ($0.6707 per pound), packed	C.B.S. Imports Corp. v. U.S. (C.D. 4739)	Charleston Perlon (all nylon) staple fiber, non crimp set
R80/117	Watson, J. April 25, 1980	Consolidated Sewing Machine Corp.	R60/3565, etc.	Export value	Appraised unit values less 7.5%, net packed	Agreed statement of facts	Los Angeles Sewing machines
R80/118	Watson, J. April 25, 1980	Consolidated Sewing Machine Corp.	R61/16565, etc.	Export value	F.o.b. unit invoice prices plus 20% of difference between f.o.b. unit invoice prices and appraised values	Agreed statement of facts	New York Sewing machines
R80/119	Watson, J. April 25, 1980	Consolidated Merch. Corp.	R64/14652, etc.	Export value	F.o.b. unit invoice prices plus 20% of difference between f.o.b. unit invoice prices and appraised values	Agreed statement of facts	Miami Sewing machines

DECISION NUMBER	JUDGE & DATE OF DECISION	PLAINTIFF	COURT NO.	BASIS OF VALUATION	HELD VALUE	BASIS	PORT OF ENTRY AND MERCHANDISE
R80/120	Watson, J. April 25, 1980	J. C. Penney Co.	R60/17206, etc.	Export value	$13.208 ea. (radios with leather cases); 19¢ ea. (batteries); 50¢ ea. (earphone and cases)	Agreed statement of facts	Seattle Radios with leather cases; batteries; earphone and cases
R80/121	Watson, J. April 25, 1980	J. C. Penney	R60/22958	Export value	F.o.b. unit invoice prices plus 20% of difference between f.o.b. unit invoice prices and appraised values	Agreed statement of facts	Los Angeles Tubing mats
R80/122	Watson, J. April 25, 1980	J. C. Penney	R64/12818, etc.	Export value	Appraised unit values less 7.5%, net packed	Agreed statement of facts	Baltimore Tubing mats
R80/123	Watson, J. April 25, 1980	J. C. Penney	R64/14502, etc.	Export value	F.o.b. unit invoice prices plus 20% of difference between f.o.b. unit invoice prices and appraised values	Agreed statement of facts	Houston Tubing mats
R80/124	Watson, J. April 25, 1980	J. C. Penney	R64/17900, etc.	Export value	F.o.b. unit invoice prices plus 20% of difference between f.o.b. unit invoice prices and appraised values	Agreed statement of facts	Boston Tubing mats
R80/125	Watson, J. April 25, 1980	Wheeler & Miller, a/c Fleetwood Industries	R59/8186, etc.	Export value	F.o.b. unit invoice prices plus 20% of difference between f.o.b. unit invoice prices and appraised values	Agreed statement of facts	San Francisco Sewing machine heads

R80/126	Newman, J. April 25, 1980	Gehrig, Hoban & Co., Inc.	R68/18085, etc.	United States value	Determined by adding f.o.b. unit invoice price in Swiss francs converted to a dollar value at rate of exchange in effect at time of entry (the "claimed value"), 53% of difference between the claimed value and appraised value	Agreed statement of facts	New York Machine tools and accessories and parts

Appeal to U.S. Court of Customs and Patent Appeals

APPEAL 80–28.—The Ferriswheel *v.* United States.—SCOTTISH HIGHLAND JACKETS AND KILTS—GARMENTS (WOOL AND COTTON) WITH FRINGE, EPAULETS OR BRAID—MEN'S WEARING APPAREL, ORNAMENTED—MEN'S WEARING APPAREL, NOT ORNAMENTED—TSUS. Appeal from C.D. 4844.

In this case two men's kilts and an Argyll jacket of wool were assessed with duty at the rate of 42.5 percent ad valorem under the provision in item 380.02, Tariff Schedules of the United States, for men's wearing apparel, ornamented, of wool. A Sheriffmuir jacket made from cotton was assessed with duty at the rate of 35 percent under the provision in item 380.00, as modified by T.D. 68–9, for men's wearing apparel, ornamented, of cotton. Plantiff-appellant contended that the wool garments were dutiable at 37.5 cents per pound plus 21 percent under item 380.66 and that the cotton jacket was dutiable at 8 percent under item 380.12, as modified by T.D. 68–9, as men's wearing apparel, not ornamented.

The Customs Court found that plaintiff had abandoned its claim as to the wool Argyll jacket and sustained the classification under item 380.02. As to the kilts and the Sheriffmuir jacket, the court determined they were properly classified under items 380.02 and 380.00, respectively. The action was dismissed.

It is claimed that the Customs Court erred in "sustaining the U.S. Customs Service classification of men's kilts under TSUS 380.2070, Argyll jackets under TSUS 380.0245 and Sheriffmuir doublets under TSUS 380.0046, and in failing to classify the aforesaid garments under TSUS 380.6605, 380.6690, and 380.1290, respectively"; in failing to find and hold that the fringe on a man's kilt is functional and is not, therefore, ornamentation for tariff purposes; in failing to find and rule that the epaulets in Argyll jackets and Sheriffmuir doublets are functional and are, therefore, not ornamentation for tariff purposes; in failing to find and rule that the fringe on men's kilts, the epaulets on Argyll jackets and Sheriffmuir doublets and the three strips of braid on the cuffs and pocket flaps of Argyll jackets and Sheriffmuir doublets are all traditional features and are, therefore, not ornamentation for tariff purposes.

Recent Unpublished Customs Service Decisions

The following listing of recent administrative decisions issued by the Office of Regulations and Rulings, U.S. Customs Service, and not otherwise published, is published for the information of Customs officers and the importing community. Although the decisions are not of sufficient general interest to warrant publication as Treasury decisions, the listing describes the issues involved and is intended to aid Customs officers and concerned members of the public in identifying matters of interest which recently have been considered by the Office of Regulations and Rulings.

A copy of any decision included in this listing, identified by its date and file number, may be obtained in a form appropriate for public distribution upon written request to the Office of Regulations and Rulings, attention: Legal Reference Area, room 2404, U.S. Customs Service, 1301 Constitution Avenue NW., Washington, D.C. 20229. These copies will be made available at a cost to the requester of 10 cents per page. However, the Customs Service will waive this charge if the total number of pages copied is 10 or less.

Decisions listed in earlier issues of the CUSTOMS BULLETIN, through December 21, 1979, are available in microfiche format at a cost of $17.70 (15 cents per sheet of fiche). It is anticipated that additions to the microfiche will be made quarterly and subscriptions are available. Requests for the microfiche now available and for subscriptions should be directed to the Legal Reference Area. Subscribers will automatically receive updates as they are issued and will be billed accordingly.

Dated: May 6, 1980.

JOHN T. ROTH,
Acting Director,
Regulations and Research Division.

Date of decision	File No.	Issue
3-12-80	104428	Aircraft: Outward general declaration serving as foreign clearance for scheduled cargo aircraft intending to lade bunkers or effect crew changes prior to departing foreign
4-10-80	711802	Entry: Whether district director's proposal to raise informal entry limit in Virgin Islands is precluded by law
4-10-80	712217	Prohibited and restricted importations: Copyright infringement: Seizure and detention of watches
4-10-80	712789	Prohibited and restricted importations: Trademark infringement: Shoe design
4- 1-80	055442	Classification: Whether a play figure is a toy figure of an animate object (737.40, 737.95)
3- 5-80	060943	Classification: Live water buffalo (100.95)
3-28-80	061131	Classification: Address book fillers (256.30, 256.56, 256.58, 256.90)
3-31-80	061258	Classification: Cassettes with tabs out (678.50, 685.40, 774.60)
3-28-80	061472	Classification: Leather athletic shoes (700.35, 700.85)
3-28-80	061580	American selling price: Slip-on women's work shoe (700.60)
3-12-80	061593	Classification: Pipe-forming machine (664.08, 666.00, 678.50)
3-31-80	061653	Classification: Women's plastic boots of molded construction (700.53)
3-28-80	061755	Classification: Space helmet walkie-talkie (685.26, 737.95)
4- 8-80	061772	American selling price: Women's open-toe, open-back, ankle-strap casual shoe (700.60)
4- 1-80	061827	American selling price: Women's closed-toe, closed-back, ankle-strap casual shoe (700.60)
3-31-80	061849	American selling price: Child's protective boot (700.60)
4- 1-80	061852	American selling price: Child's closed-toe, closed-back, ankle-strap casual shoe (700.60)
4- 1-80	061941	Classification: Tricycle horn (732.52, 774.55)
3-28-80	062834	Classification: Air preheaters (660.15, 661.68)
4- 8-80	062891	Classification: Motorized carts (666.00, 692.02, 692.10)
4- 1-80	062982	Classification: Safety vests and life jackets (770.80)
3-31-80	062999	Classification: Nonmetallic valves and fittings (680.19, 680.27, 774.55)
4-10-80	063677	Classification: Slot ventilators; U-valve meters (657.25, 682.95, 712.49)
4- 9-80	064109	Classification: Pullovers (378.05, 378.10, 378.15, 378.35)
4- 1-80	064120	Classification: Dental light arm assembly (653.39)
3-31-80	064185	Classification: Animal characters of soft yarn material (737.22, 737.40)
4- 4-80	064193	Classification: Stickers (774.55, 790.55)
4- 1-80	064194	Classification: Wooden basket handle (204.05, 204.27, 207.00)

Date of decision	File No.	Issue
3-28-80	064196	Classification: Snowmobile boot (700.58, 700.60, 700.80)
4- 4-80	064279	Classification: Gloves (705.30, 705.35, 705.72, 705.73, 705.74, 735.06)
4-1-80	064306	Classification: Coated peanuts (157.10)
4-9-80	064385	Classification: Bumper cars (678.50, 790.39)
3-31-80	064479	Classification: Plastic shopping bags (774.55)
3-28-80	064505	Classification: Hat of goose down (703.75)
4- 4-80	064524	Classification: Knit halter top and shorts (382.06, 382.78)
4- 9-80	064529	Classification: Iodine disinfectant (439.50)

International Trade Commission Notices

Investigations by the U.S. International Trade Commission

DEPARTMENT OF THE TREASURY

The appended notices relating to investigations by the U.S. International Trade Commission are published for the information of Customs officers and others concerned.

R. E. CHASEN,
Commissioner of Customs.

In the Matter of CERTAIN AIRTIGHT, CAST-IRON STOVES	Investigation No. 337-TA-69

Notice of Termination

Upon consideration of the presiding officer's recommendation and the record in this proceeding, the Commission is ordering the termination of investigation No. 337-TA-69, Certain Airtight Cast-Iron Stoves, as to respondent Gambles Import Corp., by granting motion No. 69-20 by Gambles. The motion to terminate was unopposed by the Commission investigative attorney and by the complainants.

The order is effective as of April 25, 1980.

Any party wishing to petition for reconsideration of the Commission's action must do so within 14 days of service of the Commission order. Such petitions must be in accord with Commission rule 210.56 (19 CFR 210.56).

Copies of the Commission's action and order, the Commissioners' opinion(s), and any other public documents in this investigation are available to the public during official working hours (8:45 a.m. to 5:15 p.m.) in the Office of the Secretary, U.S. International Trade Commission, 701 E Street NW., Washington, D.C. 20436, telephone 202-523-0161.

Notice of the institution of this investigation was published in the Federal Register of July 12, 1979 (44 F.R. 40732).

By order of the Commission.

Issued: April 25, 1980.

KENNETH R. MASON,
Secretary.

Index

U.S. Customs Service

	T.D. No.
Treasury decisions:	
Bonds: For the control of instruments of international traffic	80-121
Customhouse broker license—suspension	80-120
Reimbursable services—excess cost of preclearance operation	80-119
Synopses of drawback decisions	80-122
Polyterpene resins	80-122-A
Concertina, barbed tape	80-122-B
Candy products	80-122-C
Bindings, finished and combined finished upper materials	80-122-D
PTFE rods, sheets, tapes, tubes	80-122-E
Piece goods, bleached, dyed, and/or printed	80-122-F
Steel in plate or shapes	80-122-G
Gear frames, automotive	80-122-H
Computer systems, computer subsystems	80-122-I
Aviation antiknock, motor mix antiknock	80-122-J
2-methyl-6-ethyl aniline (MEA)	80-122-K
Refrigeration, heating, and air-conditioning systems	80-122-L
Piece goods, bleached and/or dyed and/or mercerized	80-122-M
Cranes, lattice boom, hydraulic cranes	80-122-N
Lubricant additives	80-122-O
Confectionery items	80-122-P
Beverages, canned and bottled, carbonated and noncarbonated.	80-122-Q
Detergents, synthetic	80-122-R
Ferrovanadium carbide nitrogen	80-122-S
Molybdic oxide	80-122-T
Piece goods, bleached, mercerized, finished, dyed	80-122-U
Grapefruit juice, canned	80-122-V
Beverages, still and carbonated	80-122-W
Stainless steel tanks	80-122-X
Piece goods	80-122-Y
Orange juice from concentrate	80-122-Z

Court of Customs and Patent Appeals

	C.A.D. No.
General Electric Company v. *The United States*	1245
Ozen Sound Devices v. *The United States*	1246

Customs Court

Appeal to U.S. Court of Customs and Patent Appeals (p.—):

Appeal 80-28—Scottish Highland jackets and kilts; garments (wool and cotton) with fringe, epaulets or braid; men's wearing apparel, ornamented; men's wearing apparel, not ornamented; TSUS

JUN 8 1980 Item 950-D T1.11/3:14/22 * $1.30
Contd

Customs Bulletin

J#318-663
350

Regulations, Rulings, Decisions, and Notices concerning Customs and related matters

and Decisions

of the United States Court of Customs and Patent Appeals and the United States Customs Court

Vol. 14 | MAY 28, 1980 | No. 22

9247

This issue contains

T.D. 80–123 through 80–125
T.D. 80–127 through 80–132
C.D. 4854
Protest abstracts P80/63 through P80/66
Reap. abstracts R80/127 through R80/143
International Trade Commission Notice

THE DEPARTMENT OF THE TREASURY
U.S. Customs Service

NOTICE

The abstracts, rulings, and notices which are issued weekly by the U.S. Customs Service are subject to correction for typographical or other printing errors. Users may notify the U.S. Customs Service, Logistics Management Division, Washington, D.C. 20229, of any such errors in order that corrections may be made before the bound volumes are published.

For sale by the Superintendent of Documents, U.S. Government Printing Office, Washington, D.C. 20402. Price: $1.30 (single copy domestic); $1.65 (single copy foreign). Subscription price: $65.00 a year domestic; $81.25 a year foreign.

U.S. Customs Service

Treasury Decisions

(T.D. 80-123)

Cotton and Manmade Fiber Textile Products—Restriction on Entry

Restriction on entry of cotton and manmade fiber textile products manufactured or produced in the Dominican Republic

There is published below a directive of April 9, 1980, received by the Commissioner of Customs from the chairman, Committee for the Implementation of Textile Agreements, concerning restriction of entry of cotton and manmade fiber textile products in certain categories manufactured or produced in the Dominican Republic. This directive amends, but does not cancel, that committee's directive of November 28, 1979 (T.D. 80-32).

This directive was published in the Federal Register on April 14, 1980 (45 F.R. 25208), by the committee.

(QUO-2-1)

Dated: May 8, 1980.

WILLIAM D. SLYNE
(For Chester R. Krayton,
Director, Duty Assessment Division).

(T.D. 80-124)

Manmade Fiber Textiles—Restriction on Entry

Restriction on entry of manmade fiber textiles manufactured or produced in Malaysia

There is published below a directive of April 18, 1980, received by the Commissioner of Customs from the chairman, Committee for the Implementation of Textile Agreements, concerning restriction of entry of manmade fiber textiles in category 604 manufactured or produced in Malaysia. This directive amends, but does not cancel, that committee's directive of December 11, 1979 (T.D. 80-52).

This directive was published in the Federal Register on April 23, 1980 (45 F.R. 27463), by the committee.

(QUO-2-1)

Dated: May 8, 1980.

WILLIAM D. SLYNE
(For Chester R. Krayton,
Director, Duty Assessment Division).

(T.D. 80-125)

Cotton Textile Products—Restriction on Entry

Restriction on entry of cotton textile products manufactured or produced in Brazil

There is published below a directive of March 26, 1980, received by the Commissioner of Customs from the chairman, Committee for the Implementation of Textile Agreements, concerning restriction on entry of cotton textile products in categories 337, 339, and 369 (part) manufactured or produced in Brazil.

This directive was published in the Federal Register on March 31, 1980 (45 F.R. 20990), by the committee. A correction to the directive was published in the Federal Register on April 14, 1980 (45 F.R. 25209), showing pounds as the unit of quantity for category 369 (part).

(QUO-2-1)

Dated: May 8, 1980.

WILLIAM D. SLYNE
(For Chester R. Krayton,
Director, Duty Assessment Division).

(T.D. 80-127)

Foreign Currencies—Daily Rates for Countries Not on Quarterly List

Rates of exchange based on rates certified to the Secretary of the Treasury by the Federal Reserve Bank of New York for the Brazil cruzeiro, People's Republic of China yuan, Hong Kong dollar, Iran rial, Philippines peso, Singapore dollar, Thailand baht (tical) and Venezuela bolivar

The Federal Reserve Bank of New York, pursuant to section 522(c), Tariff Act of 1930, as amended (31 U.S.C. 372(c)), has certified buying rates for the dates and foreign currencies shown below. The rates of exchange, based on these buying rates, are published for the informa-

tion and use of Customs officers and others concerned pursuant to part 159, subpart C, Customs Regulations (19 CFR 159, subpart C).

Brazil cruzeiro:	
March 31–April 4, 1980	$0. 0214
People's Republic of China yuan:	
March 31, 1980	$0. 631074
April 1–4, 1980	. 628575
Hong Kong dollar:	
March 31, 1980	$0. 196754
April 1, 1980	. 196078
April 2, 1980	. 196812
April 3–4, 1980	. 196464
Iran rial:	
March 31–April 4, 1980	Not available
Philippines peso:	
March 31–April 4, 1980	$0. 1345
Singapore dollar:	
March 31, 1980	$0. 437733
April 1, 1980	. 432900
April 2, 1980	. 434405
April 3–4, 1980	. 434783
Thailand baht (tical):	
March 31–April 2, 1980	$0. 0489
April 3–4, 1980	. 0490
Venezuela bolivar:	
March 31–April 4, 1980	$0. 2329

(LIQ-3-TRODE)

Dated: May 7, 1980.

HARRISON C. FEESE
(For Chester R. Krayton,
Director, Duty Assessment Division).

(T.D. 80-128)

Foreign Currencies—Daily Rates for Countries not on Quarterly List

Rates of exchange based on rates certified to the Secretary of the Treasury by the Federal Reserve Bank of New York for the Brazil cruzeiro, People's Republic of China yuan, Hong Kong dollar, Iran rial, Philippines peso, Singapore dollar, Thailand baht (tical) and Venezuela bolivar

The Federal Reserve Bank of New York, pursuant to section 522(c), Tariff Act of 1930, as amended (31 U.S.C. 372(c)), has certified buying

rates for the dates and foreign currencies shown below. The rates of exchange, based on these buying rates, are published for the information and use of Customs officers and others concerned pursuant to part 159, subpart C, Customs Regulations (19 CFR 159, subpart C).

Brazil cruzeiro:	
April 7, 1980	$0.0214
April 8–11, 1980	.0207
People's Republic of China yuan:	
April 7–8, 1980	$0.628575
April 9–10, 1980	.631752
April 11, 1980	.644621
Hong Kong dollar:	
April 7, 1980	$0.196464
April 8, 1980	.196348
April 9, 1980	.198491
April 10, 1980	.199302
April 11, 1980	.199641
Iran rial:	
April 7–11, 1980	Not available
Philippines peso:	
April 7–11, 1980	$0.1345
Singapore dollar:	
April 7, 1980	$0.431686
April 8, 1980	.434405
April 9, 1980	.442087
April 10, 1980	.444444
April 11, 1980	.445038
Thailand baht (tical):	
April 14–18, 1980	$0.0490
Venezuela bolivar:	
April 14–18, 1980	$0.2329

(LIQ-3-TRODE)

Dated: May 13, 1980.

HARRISON C. FEESE
(For Chester R. Krayton,
Director, Duty Assessment Division).

(T.D. 80-129)

Foreign Currencies—Daily Rates for Countries not on Quarterly List

Rates of exchange based on rates certified to the Secretary of the Treasury by the Federal Reserve Bank of New York for the Brazil cruzeiro, People's Republic

of China yuan, Hong Kong dollar, Iran rial, Philippines peso, Singapore dollar, Thailand baht (tical) and Venezuela bolivar

The Federal Reserve Bank of New York, pursuant to section 522(c), Tariff Act of 1930, as amended (31 U.S.C. 372(c)), has certified buying rates for the dates and foreign currencies shown below. The rates of exchange, based on these buying rates, are published for the information and use of Customs officers and others concerned pursuant to part 159, subpart C, Customs Regulations (19 CFR 159, subpart C).

Brazil cruzeiro:	
April 14–18, 1980	$0.0207
People's Republic of China yuan:	
April 14–16, 1980	$0.644621
April 17–18, 1980	.649857
Hong Kong dollar:	
April 14, 1980	$0.200321
April 15, 1980	.199203
April 16, 1980	.199521
April 17, 1980	.200321
April 18, 1980	.200803
Iran rial	
April 14–18, 1980	Not available
Philippines peso:	
April 14–18, 1980	$0.1345
Singapore dollar:	
April 14, 1980	$0.447027
April 15, 1980	.444444
April 16, 1980	.446130
April 17, 1980	.448833
April 18, 1980	.451467
Thailand baht (tical):	
April 7–11, 1980	$0.0490
Venezuela bolivar:	
April 7–11, 1980	$0.2329

(LIQ-3-TRODE)

Dated: May 13, 1980.

HARRISON C. FEESE
(For Chester R. Krayton,
Director, Duty Assessment Division).

(T.D. 80–130)

Foreign Currencies—Variances From Quarterly Rate

Rates of exchange based upon rates certified to the Secretary of the Treasury by the Federal Reserve Bank of New York

The following rates of exchange are based upon rates certified to the Secretary of the Treasury by the Federal Reserve Bank of New York, pursuant to section 522(c), Tariff Act of 1930, as amended (31 U.S.C. 372(c)), and reflect variances of 5 per centum or more from the quarterly rate published in T.D. 80–103 for the following countries. Therefore, as to entries covering merchandise exported on the dates listed, whenever it is necessary for Customs purposes to convert such currency into currency of the United States, conversion shall be at the following rates:

Austria schilling:	
April 14, 1980	$0.074738
April 15, 1980	(1)
April 16, 1980	.074377
April 17, 1980	.075572
April 18, 1980	.075643
Belgium franc:	
April 17, 1980	$0.033411
April 18, 1980	.033501
Denmark krone:	
April 16, 1980	$0.172712
April 17, 1980	.173010
April 18, 1980	.173235
Germany deutsche mark:	
April 16, 1980	$0.537634
April 17, 1980	.538503
April 18, 1980	.539374
Ireland pound:	
April 14, 1980	$2.0010
April 15, 1980	(1)
April 16, 1980	2.0070
April 17, 1980	2.0230
April 18, 1980	2.0210
Netherlands guilder:	
April 16–17, 1980	$0.490196

[1] Rate did not vary this date. Use quarterly rate.

Switzerland franc:

April 14, 1980	$0. 573723
April 15, 1980	. 565131
April 16, 1980	. 577701
April 17, 1980	. 575705
April 18, 1990	. 574713

(LIQ-3-TRODE)

Dated: April 13, 1980.

HARRISON C. FEESE
(For Chester R. Krayton,
Director, Deputy Assessment Division).

(T.D. 80-131)

Foreign Currencies—Variances From Quarterly Rate

Rates of exchange based upon rates certified to the Secretary of the Treasury by the Federal Reserve Bank of New York

The following rates of exchange are based upon rates certified to the Secretary of the Treasury by the Federal Reserve Bank of New York, pursuant to section 522(c), Tariff Act of 1930, as amended (31 U.S.C. 372(c)), and reflect variances of 5 per centum or more from the quarterly rate published in T.D. 80-103 for the following countries. Therefore, as to entries covering merchandise exported on the dates listed, whenever it is necessary for Customs purposes to convert such currency into currency of the United States, conversion shall be at the following rates:

Austria schilling:

April 11, 1980	$0. 074627

Switzerland franc:

April 10, 1980	$0. 569801
April 11, 1980	. 572082

(LIQ-3-TRODE)

Dated: April 13, 1980.

HARRISON C. FEESE
(For Chester R. Krayton,
Director, Duty Assessment Division).

(T.D. 80-132)

Tariff Classification—Machine-Processed Cigarette Leaf Tobacco

Notice that certain machine-processed cigarette leaf tobacco is reclassified as a partially manufactured tobacco product

318-663 O - 80 - 2

AGENCY: U.S. Customs Service, Department of the Treasury.

ACTION: Decision concerning an American manufacturer's petition.

SUMMARY: The Customs Service has reviewed a petition filed by an American producer of flue-cured tobacco requesting that certain machine-threshed cigarette leaf tobacco, currently classified by Customs as scrap tobacco under item 170.60, Tariff Schedules of the United States (TSUS), be reclassified as stemmed cigarette leaf filler tobacco under item 170.35, TSUS. The Customs Service has reviewed the voluminous record and concludes that the subject merchandise is neither scrap tobacco nor is it in leaf form, but has been processed to the extent that it may be considered a partially manufactured product classifiable under the provision for tobacco, manufactured or not manufactured, not specially provided for, in item 170.80, TSUS.

DATES: This decision will be effective with respect to merchandise entered or withdrawn from warehouse for consumption on or after 30 days from the date of publication of this notice in the CUSTOMS BULLETIN.

FOR FURTHER INFORMATION CONTACT: John G. Hurley, Classification and Value Division, U.S. Customs Service, 1301 Constitution Avenue NW., Washington, D.C. 20229; 202-566-5786.

SUPPLEMENTARY INFORMATION:

BACKGROUND

On September 28, 1979, a notice was published in the Federal Register (44 F.R. 56089) indicating that the Customs Service had received a petition from an American producer of flue-cured tobacco, filed under section 516 of the Tariff Act of 1930, as amended (19 U.S.C. 1516), requesting that certain imported machine-threshed cigarette leaf tobacco, currently classified by Customs under the provision for scrap tobacco in item 170.60, Tariff Schedules of the United States (TSUS), be reclassified under the provision for stemmed cigarette leaf filler tobacco in item 170.35, TSUS. Comments concerning the petition were to have been received no later then November 27, 1979.

The merchandise in question is produced in the manner set forth below. Tobacco leaves, approximately 10 to 20 inches in length, are received at the warehouse, graded and sorted, and then placed on a blending line where the undesirable leaves are removed. On a blending conveyor, tips of the leaves and a portion of the stems are removed, leaving the butts.

The moisture content of the butts is increased to make them more pliable, and the moisturized butts are then threshed and separated in

four or five stages. In the separating process, the butts are torn into various sizes. As a result, the desirable lighter fragments are blown into a collecting belt and the heavier elements fall through screens of decreasing size. Those which are heavier, containing stem fragments, pass through a screen having grid wires spaced one-eighth inch apart and are not blended in with the desired product. The combined tip and butt fragments are processed further by partial drying, cooling and remoisturizing to achieve a uniform moisture content. The product will then be compacted by hydraulic ram into cartons, cases, or hogsheads under pressure. This operation will cause additional fragmentation. The stem content of machine-threshed tobacco is said to be about 3 percent. Approximately 60 percent of this threshed product is described as being 1 to 2 inches in length; 25 percent, one-half to 1 inch in length; about 14 percent, one-fourth to one-half inch in length; and 1 percent, one-eighth inch or less in length. This latter size is not in issue. Before being manufactured into cigarettes, the threshed tobacco is mixed with other types of tobacco, further shredded, humidified, and treated with additives.

The petitioner claims that the early administrative decisions reflect the legislative and judicial decisions in defining scrap tobacco as cut pieces of tobacco leaf, and cut slices of tobacco stems resulting from manufacturing of leaf tobacco. Scrap tobacco, the petitioner asserts, is the unintended byproduct of handling, curing, or manufacturing of tobacco, including floor sweepings. In contrast, the subject merchandise is a desired product.

The petitioner alleges that, with respect to the prevailing commercial meaning of stemmed leaf, the trade considers any stemmed leaf product acceptable as stemmed leaf tobacco if the size of the tobacco lamina constituting the product is 81 to 85 percent one-half inch or more in size. It is the petitioner's view that the subject merchandise meets this criterion.

The petitioner asserts that the increase in the importation of tobacco classified as scrap from 1976 through 1978 results in a loss of revenue as the result of lower duty assessed. It is further asserted that importations of this tobacco have had an adverse economic impact on the domestic growers.

DISCUSSION OF COMMENTS

Several hundred comments were received by the Customs Service in response to the instant American manufacturer's petition. The majority of comments from associations of tobacco farmers and individual tobacco farmers in the United States supported the petition. These farmers support the petitioner's claim that importations of the subject merchandise have had an adverse impact on domestic growers.

Several briefs and comments, however, filed on behalf of tobacco processors, oppose the petition and support the current classification as scrap tobacco under item 170.60, TSUS, or, in the alternative, as tobacco, manufactured or not manufactured, not specially provided for, under item 170.80, TSUS. These briefs contend that the term "scrap" includes not only the unintended byproducts resulting from processing of various tobacco products, but also small pieces which are intentionally produced; this, they maintain, is manufactured scrap. The briefs emphasize that the term "leaf" in the tariff schedules has always referred to the whole tobacco leaf or half-leaf. The machine-threshed product cannot be considered a leaf in view of the legislative and judicial history of the subject. The briefs note that the tariff schedules still define tobacco in leaf form, and that these legal definitions have no meaning if not referring to the actual leaf.

A report dated November 6, 1979, was also prepared by the Comptroller General of the United States, in which it was concluded that the subject tobacco was not scrap for tariff purposes, but should be classified as stemmed leaf filler tobacco in item 170.35, TSUS. The report concluded that, because this tobacco was not classified at the higher rate, as much as $188 million may have been lost over the past 10 years.

DETERMINATION

For tariff purposes, waste has traditionally included not only manufactured articles which have become useless for the original purpose for which they were made and fit only for remanufacture, but also includes refuse, surplus, and useless stuff resulting from manufacture or manufacturing processes. *Harley Co.* v. *United States*, T.D. 41644 (1926).

With respect to tobacco, the term "scrap tobacco" includes tobacco in the form of fragments and broken pieces resulting from the handling of leaf cigarette tobacco, as well as small pieces one-fourth inch in diameter and shredded pieces up to one-half inch, resulting from the manufacture of tobacco products. The Summary of Tariff Information (1929) stated that the term "scrap tobacco" included three distinct kinds:

> (1) Leaf tobacco scrap, the fragments of leaves broken in sorting, handling, and stemming;
>
> (2) Factory scrap, the cuttings and clippings which accumulate in the manufacture of cigars;
>
> (3) Manufactured scrap, generally the cheapest form of smoking tobacco consisting of leaves broken or cut into coarse pieces heavily sweetened for smoking or chewing.

In contrast, in *Latimer* v. *United States*, 223 U.S. 501 (1912), the Supreme Court considered a product consisting of small pieces of

tobacco broken in the manufacture and handling of tobacco which were used in the manufacture of a cheap grade of cigarettes and stogies not to be scrap, but tobacco manufactured or not manufactured.

Customs has ruled that flue-cured tobacco, of a cigarette type, which consisted of pieces of lamina measuring from less than 1 inch to over 5 inches, was not cigarette leaf tobacco, stemmed or non-stemmed, or scrap, but tobacco, manufactured or not manufactured. Basically, the history of the classification of tobacco as scrap discloses a product which fits the basic defintion of waste or scrap, that is, that of a product unsuitable for its original purpose and fit only for remanufacture. In contrast, the machine-threshed tobacco in issue is a desired product, and is processed for the purpose of manufacturing cigarettes. Accordingly, the subject merchandise cannot be classified as scrap.

The next question is whether the instant product is classifiable as a leaf tobacco. The petition accurately describes the tobacco processed as a stemmed leaf product, but this does not establish it as a leaf for tariff purposes. A review of the various tariff laws reflects what Congress intended by the term "leaf". For instance, in the Tariff Act of March 3, 1883 (schedule F., Tobacco), leaf tobacco is described as a tobacco leaf which is 85 percent of the requisite size and necessary fineness of texture to be suitable for wrapper. In the Tariff Act of August 27, 1894 (schedule F., Tobacco and Manufactures of.), tobacco manufacturers were described as processing or manufacturing tobacco by such diverse means as cutting, pressing, grinding, crushing, or rubbing the tobacco leaf. In the Tariff Act of August 5, 1909, (schedule F., Tobacco and Manufactures of.), the unstemmed tobacco leaf is described as the natural leaf, not manufactured or altered in any way. The Summary of Tariff Information (1920), states that the term scrap tobacco usually refers to clippings accumulating in working cigars, although cheap leaf may be included.

In the Dictionary of Tariff Information (1924), tobacco was defined by the U.S. Tariff Comisssion as dried cured leaves of Nicotania Tobacco (with or without midrib or stem) commonly known as leaf tobacco.

In the Summaries of Trade and Tariff Information (1967), cigarette leaf tobacco (not stemmed in item 170.32) or (stemmed 170.35) is described as filler tobacco "that is tobacco essentially in leaf form other than wrapper tobacco)."

It is pertinent to note that the headnote definitions of wrapper and leaf tobacco have not been changed since the enactment of the current tariff schedule. Headnotes to part 13, schedule 1, TSUS, still refer to wrapper tobacco as that quality of leaf tobacco which has the requisite color, texture and burn, and is of sufficient size for cigar wrappers, and the term filler tobacco means all other leaf tobacco. Headnote 2 de-

318-663 O - 80 - 3

fines the method of determining the percentage of wrapper tobacco by using the number of leaves of tobacco.

The only conclusion possible is that Congress, even in regard to the tariff which went into effect January 1980, has never intended to materially alter the definition of leaf tobacco. It might be noted that at the April 23–27, 1979, hearings before the House of Representatives Ways and Means Subcommittee on Trade relating to the Multilateral Trade Negotiations (1979) (serial 96–13, pp. 724–6), a spokesman for the Leaf Tobacco Exporters Association and the Tobacco Association of the United States, stated that members of the two associations purchased 70 percent of the U.S. tobacco, and indicated satisfaction with the current tariff structure. He noted that the U.S. exports about $2 billion annually of tobacco and tobacco products and imports about $500 million.

With respect to the petitioner's claim that the current classification at a lower rate of duty has resulted in a loss of revenue, it is worth noting that reclassification might merely cause importers to import whole tobacco in whole leaf form rather than tobacco which has already been machine-threshed, resulting in even less duty than that actually assessed.

Therefore, in view of the legislative and administrative history concerning classification of tobacco processed in the manner described, it is concluded that the subject tobacco product is correctly classifiable as tobacco, manufactured or not manufactured, not specially provided for, in item 170.80, TSUS.

This decision will be effective with respect to merchandise entered or withdrawn from warehouse for consumption on or after 30 days from the date of publication of this notice in the CUSTOMS BULLETIN.

Dated: May 15, 1980.

R. E. CHASEN,
Commissioner of Customs.

Published in the Federal Register, May 20, 1980 (44 FR 33761)

Decisions of the United States Customs Court

United States Customs Court

One Federal Plaza

New York, N.Y. 10007

Chief Judge

Edward D. Re

Judges

Paul P. Rao
Morgan Ford
Scovel Richardson
Frederick Landis
James L. Watson
Herbert N. Maletz
Bernard Newman
Nils A. Boe

Senior Judge

Samuel M. Rosenstein

Clerk

Joseph E. Lombardi

Customs Decision

(C.D. 4854)

In Re U.S. International Trade Commission Investigation No. AA1921–147A (Electric Golf Cars From Poland)	Court No. 80–4–00580

Opinion and Order

(Dated April 30, 1980)

Watson, Judge: Plaintiff, Melex U.S.A., Inc., is an importer of golf cars from Poland, which cars were the subject to an antidumping

finding in 1975 (T.D. 75–288). Plaintiff is presently a participant in an administrative proceeding instituted in February 1980 at its request, in which the defendant International Trade Commission (ITC), under section 751 of the Tariff Act of 1930, is investigating whether changed circumstances justify a revocation of the previous finding of dumping and remove the threat of material injury to a domestic industry.

In the course of the aforementioned proceeding, plaintiff requested confidential information submitted by domestic interests in accordance with section 777(c)(1) of the Tariff Act of 1930. The ITC denied the request. Plaintiff subsequently brought this action under section 777(c)(2) of the Tariff Act of 1930, seeking court-ordered disclosure of confidential information submitted concerning the price of domestic golf cars.

Defendant has moved to dismiss for failure to state a claim as well as for summary judgment. Plaintiff has made a cross-motion for summary judgment. Oral argument has been held in which the Harley-Davidson Motor Co., Inc., the party submitting the information to which plaintiff's request related, participated.

Defendant raises two basic jurisdictional challenges to the action. The first, which is of lesser consequence, argues that to allow this action would somehow give retroactive application to section 777(c)(2), prior to the January 1, 1980, effective date of the Trade Agreements Act of 1979 (Public Law 96–39). However, it seems clear to the court that the origin and effect of this action is entirely related to events occurring after January 1, 1980. Only after that date was the investigation initiated, the confidential information submitted, and the request for it by plaintiff denied. The entire dispute is directed toward a future decision by the ITC, which will be potentially subject to judicial review under section 516A(2)(B)(iii) of the Tariff Act of 1930, itself a creation of the Trade Agreements Act of 1979. In short, all the operative facts of this dispute arose subsequent to the effective date of the Trade Agreements Act of 1979, and the mere fact that this is an inquiry into the possible revocation of a 1975 dumping finding is of no jurisdictional significance.

Defendant's second jurisdictional challenge is a much more serious one and is based on the text of section 777(c)(2).

> "(2) DISCLOSURE UNDER COURT ORDER.—*If* the administering authority denies a request for information under paragraph (1), or *the Commission denies a request for confidential information submitted by the petitioner or an interested party in support of the petitioner concerning the domestic price or cost of production of the like product*, then application may be made to the U.S. Customs Court for an order directing the administering authority or the Commission to make the information available. After notification

of all parties to the investigation and after an opportunity for a hearing on the record, the court may issue an order, under such conditions as the court deems appropriate, which shall not have the effect of stopping or suspending the investigation, directing the administering authority or the Commission to make all or a portion of the requested information described in the preceding sentence available under a protective order and setting forth sanctions for violation of such order if the court finds that, under the standards applicable in proceedings of the court, such an order is warranted, and that—

"(A) the administering authority or the Commission has denied access to the information under subsection (b)(1),

"(B) the person on whose behalf the information is requested is an interested party who is a party to the investigation in connection with which the information was obtained or developed, and

"(C) the party which submitted the information to which the request relates has been notified, in advance of the hearing, of the request made under this section and of its right to appear and be heard." [Italic supplied.]

Defendant argues that section 777(c)(2), by its explicit language, does not apply to the circumstances in which plaintiff finds itself and does not provide plaintiff with an action for court-ordered disclosure. Defendant stresses that the circumstances described by section 777(c)(2) are the denial of a request for confidential information "* * * submitted by the petitioner or an interested party in support of the petitioner * * *." Defendant notes that the investigation into changed circumstances under section 751 has no petitioner. In this respect it stands in marked contrast to the antidumping proceeding described in section 732, which is commenced by the filing of a petition on behalf of an industry, and which therefore fits together easily with section 777(c)(2).

Plaintiff argues that the legislative intention was to provide court-ordered disclosure in all instances and cites with understandable emphasis the report of the Senate Committee on Finance on H.R. 4537 which states as follows at page 100:

Reasons for the provision.—Section 777 provides the maximum availability of information to interested parties consistent with the need to provide adequate protection for information accorded confidential treatment. Petitioners under the antidumping and countervailing duty laws have long contended that their ability to obtain relief has been impaired by its lack of access to the information presented by the exporters and foreign manufacturers. By the same token, importers, exporters, and other respondents in such cases have complained of lack of access to information supplied by the domestic parties to such cases, particularly with respect to the economic health of the domestic industry involved. Access to information at the administrative level is even more imperative under the bill, which provides that the standard of

> judicial review of most administrative actions in countervailing duty and antidumping duty proceedings is one of review on the administrative record.

Nevertheless, although the court can recognize a question of whether the statutory text completely expresses the legislative intent, it would go beyond judicial interpretation to change the explicit language of the statute. The term "petitioner" simply has too precise a legal meaning to surmise that it was used by the legislature in a loose manner. See, *Case* v. *Los Angeles Lumber Co.*, 308 U.S. 106, 115 (1939).

It therefore appears that with respect to a proceeding under section 751, the ITC has the discretion under section 777(c)(1) to decide whether or not it will disclose confidential information and that following the exercise of that discretion the information is not subject to court-ordered disclosure under section 777(c)(2).

For the reasons expressed above, it is hereby

ORDERED, that defendant's motion to dismiss be, and the same hereby is, GRANTED.

Decisions of the United States Customs Court

Abstracts

Abstracted Protest Decisions

DEPARTMENT OF THE TREASURY, *May 5, 1980.*

The following abstracts of decisions of the United States Customs Court at New York are published for the information and guidance of officers of the customs and others concerned. Although the decisions are not of sufficient general interest to print in full, the summary herein given will be of assistance to customs officials in easily locating cases and tracing important facts.

ROBERT E. CHASEN,
Commissioner of Customs.

DECISION NUMBER	JUDGE & DATE OF DECISION	PLAINTIFF	COURT NO.	ASSESSED	HELD	BASIS	PORT OF ENTRY AND MERCHANDISE
				Par. or Item No. and Rate	Par. or Item No. and Rate		
P80/63	Re, C.J. April 30, 1980	Kombi Ltd.	79-1-00074	Item 705.35 15%	Item 734.97 Free of duty under GSP, by virtue of Ex. Order No. 11888 of 11/24/75	Stonewall Trading Co. v. U.S. (C.D. 4023)	New York Ski gloves, skimitts, or ski mittens; product of eligible beneficiary country

DECISION NUMBER	JUDGE & DATE OF DECISION	PLAINTIFF	COURT NO.	ASSESSED	HELD	BASIS	PORT OF ENTRY AND MERCHANDISE
				Par. or Item No. and Rate	Par. or Item No. and Rate		
P80/64	Re, C.J. April 30, 1980	Kombi International	79-8-01210	Item 705.35 15%	Item 734.97 Free of duty under GSP, by virtue of Ex. Order No. 11888 of 11/24/75	Stonewall Trading Co. v. U.S. (C.D. 4023)	New York Ski gloves, skimitts, or ski mittens; product of eligible beneficiary country
R80/65	Watson, J. April 30, 1980	Entex Industries, Inc.	78-8-01489, etc.	Item 735.20 10%	Item 734.20 5.5%	APF Electronics Inc. v. U.S. (C.D. 4784)	Los Angeles T.V. game player machines
P80/66	Maletz, J. April 30, 1980	R. W. Smith & Co., Inc., a/c Poco Graphite, Inc. Poco Graphite, Inc.	76-7-01756, etc.	Item 517.91 7.5%	Item 517.11 2.5%	R. W. Smith & Co., Inc., a/c Poco Graphite, Inc. v. U.S. (Prot. abs. P79/97)	Houston Artificial graphite (grades A-200, A-250, FE-250 and A-490)

Decisions of the United States Customs Court

Abstracts

Abstracted Reappraisement Decisions

DECISION NUMBER	JUDGE & DATE OF DECISION	PLAINTIFF	COURT NO.	BASIS OF VALUATION	HELD VALUE	BASIS	PORT OF ENTRY AND MERCHANDISE
R80/127	Re, C. J. April 29, 1980	CBS Imports, Inc.	73-4-01061, etc.	Export value	Appraised values shown on entry papers less additions included to reflect currency revaluation	C.B.S. Imports Corp. v. U.S. (C.D. 4739)	New York Wearing apparel
R80/128	Re, C. J. April 29, 1980	CBS Imports Corp.	73-7-02107, etc.	Export value	Appraised values shown on entry papers less additions included to reflect currency revaluation	C.B.S. Imports Corp. v. U.S. (C.D. 4739)	New York Wearing apparel
R80/129	Re, C. J. April 29, 1980	CBS Imports Corp.	77-3-00517, etc.	Export value	Appraised values shown on entry papers less additions included to reflect currency revaluation	C.B.S. Imports Corp. v. U.S. (C.D. 4739)	New York Wearing apparel
R80/130	Re, C. J. April 29, 1980	Korvettes, Division of Arlen Realty & Development Corp.	73-7-01685	Export value	Appraised values shown on entry papers less additions included to reflect currency revaluation	C.B.S. Imports Corp. v. U.S. (C.D. 4739)	New York Wearing apparel

DECISION NUMBER	JUDGE & DATE OF DECISION	PLAINTIFF	COURT NO.	BASIS OF VALUATION	HELD VALUE	BASIS	PORT OF ENTRY AND MERCHANDISE
R80/131	Re, C. J. April 29, 1980	Korvettes, Division of Arlen Realty & Development Corp.	73-12-03480, etc.	Export value	Appraised values shown on entry papers less additions included to reflect currency revaluation	C.B.S. Imports Corp. v. U.S. (C.D. 4739)	New York Various articles
R80/132	Re, C.J. April 29, 1980	Korvettes, Division of Arlen Realty Development Corp.	76-5-01097, etc.	Export value	Appraised values shown on entry papers less additions included to reflect currency revaluation	C.B.S. Imports Corp. v. U.S. (C.D. 4739)	New York Various articles
R80/133	Re, C.J. April 29, 1980	Herman Pecker & Co., Inc.	73-1-00292	Export value	Appraised values shown on entry papers less additions included to reflect currency revaluation	C.B.S. Imports Corp. v. U.S. (C.D. 4739)	New York Stuffed animals
R80/134	Re, C.J. April 29, 1980	Topp Electronics, Inc.	74-7-01947, etc.	Export value	Values specified on entry papers by liquidating officer excluding all additions for currency revaluation	C.B.S. Imports Corp. v. U.S. (C.D. 4739)	New York Various articles
R80/135	Watson, J. April 29, 1980	Hayim & Co.	R60/14005, etc.	Export value	F.o.b. unit invoice prices plus 20% of difference between f.o.b. unit invoice prices and appraised values	Agreed statement of facts	New York Rugs
R80/136	Watson, J. April 30, 1980	Charmilles Corp. of America	77 5-00823	United States value	Determined by adding to f.o.b. unit invoice price in Swiss francs converted to a dollar	Agreed statement of facts	Chicago Machine tools and accessories and parts

					value at fixed rate of exchange as shown on special customs invoice in entry documents (the "claimed value"), 53% of difference between claimed value and appraised value		
R80/137	Watson, J. April 30, 1980	Charmilles Corp. of America	78-8-01432, etc.	United States value	Determined by adding to f.o.b. unit invoice price in Swiss francs converted to a dollar value at fixed rate of exchange as shown on special customs invoice in entry documents (the "claimed value"), 53% of difference between claimed value and appraised value	Agreed statement of facts	New York Machine tools and accessories and parts
R80/138	Watson, J. April 30, 1980	Charmilles Corp. of America	79-3-00443	United States value	Determined by adding to f.o.b. unit invoice price in Swiss francs converted to a dollar value at fixed rate of exchange as shown on special customs invoice in entry documents (the "claimed value"), 53% of difference between claimed value and appraised value	Agreed statement of facts	Philadelphia Machine tools and accessories and parts

DECISION NUMBER	JUDGE & DATE OF DECISION	PLAINTIFF	COURT NO.	BASIS OF VALUATION	HELD VALUE	BASIS	PORT OF ENTRY AND MERCHANDISE
R80/139	Watson, J. April 30, 1980	Hayim & Co.	231396A, etc.	Export value	Various appraised unit values less 7.5%, net packed	Agreed statement of facts	New York Rugs
R80-140	Watson, J. April 30, 1980	Hayim & Co.	253076A, etc.	Export value	Various appraised unit values less 7.5%, net packed	Agreed statement of facts	New York Rugs
R80/141	Watson, J. April 30, 1980	Hayim & Co.	255639A, etc.	Export value	Various appraised unit values less 7.5%, net packed	Agreed statement of facts	New York Rugs
R80/142	Watson, J. April 30, 1980	Lipmans Imports Inc.	299002A, etc.	Export value	F.o.b. unit invoice prices plus 20% of difference between f.o.b. unit invoice prices and appraised values	Agreed statement of facts	New York Brassieres
R80/143	Watson, J. April 30, 1980	Precision Knitting Accessories, Inc.	78-4-00592	Export value	Invoice unit values	Agreed statement of facts	New York Latch needles

Decision on Motion for Rehearing

APRIL 29, 1980

RSMC Inc. *v.* United States, Court No. 77-4-00572.—HOUSEHOLD ARTICLES—CHAMPAGNE GOBLETS.—C.D. 4847. Motion by plaintiff denied.

International Trade Commission Notices

Investigations by the U.S. International Trade Commission

DEPARTMENT OF THE TREASURY

The appended notices relating to investigations by the U.S. International Trade Commission are published for the information of Customs Officers and others concerned.

R. E. CHASEN,
Commissioner of Customs.

In the Matter of CERTAIN INCLINED FIELD ACCELERATION TUBES AND COMPONENTS THEREOF	Investigation No. 337-TA-67

Notice of Commission Determination Denying the Presiding Officer's Recommended Summary Determination of Noninfringement and Designating This Investigation as More Complicated

Procedural history

On December 11, 1979, respondent Dowlish Developments, Ltd., filed a motion for summary determination of noninfringement of U.S. Letters Patent No. 3,308,323 in connection with the Commission's investigation under section 337 of the Tariff Act of 1930 (19 U.S.C. 1337) of alleged unfair methods of competition and unfair acts in the importation and sale of certain inclined field acceleration tubes and components thereof in the United States. The motion for summary determination was opposed by both complainant, High Voltage Engineering Corp., and the Commission investigative attorney. Oral argument on the motion was heard by the presiding officer on December 28, 1979, and supplemental briefs were submitted. In his supplemental brief, the Commission investigative attorney recommended that the motion for summary determination be granted.

On January 10, 1980, the ALJ certified the motion to the Commission with the recommendation that it be granted. On January 24, 1980, complainant filed exceptions to the recommended determination and moved for an oral hearing before the Commission on the ALJ's recommended determination. The Commission granted complainant's motion and published notice of the hearing in the Federal Register on March 5, 1980.

Oral argument was held on March 12, 1980, in the Commission hearing room. Counsel for complainant and respondent Dowlish and the Commission investigative attorney participated. Posthearing briefs were submitted by complainant and Dowlish.

In its posthearing brief of March 24, 1980, complainant moved that the Commission designate this investigation "more complicated" within the meaning of 19 U.S.C. 1337(b)(1) and 19 CFR 210.15.

Recommendation of the Presiding Officer

In her recommended determination of January 10, 1980, the presiding officer recommended that the Commission (1) find that there is no genuine issue of material fact that must be decided in this case, (2) find that, based on the pleadings, affidavits, depositions, and admissions on file, respondent Dowlish is entitled to summary determination as a matter of law, and (3) terminate the investigation as to all respondents.

The presiding officer certified the evidentiary record to the Commission for its consideration. Copies of the presiding officer's recommendation and all other public documents may be obtained by contacting the of Office the Secretary to the Commission, 701 E Street NW., Washington, D.C. 20436, telephone 202-523-0161.

Commission determination

Having reviewed and considered (1) the presiding officer's recommended determination of noninfringement together with the record as certified to the Commission pursuant to 19 CFR 210.50 and 210.53; and (2) oral argument and written submissions subsequent to the recommended determination, the Commission determines that the motion for summary determination of the noninfringement of U.S. Letters Patent No. 3,308,323 should be denied and that the investigation should be designated "more complicated." The extended investigation will be completed no later than December 27, 1980.

Accordingly, it is ORDERED THAT—

(1) Respondent's motion for summary determination be denied;

(2) The matter of infringement be remanded to the presiding officer to develop a record on all issues and continue adjudication of the case; and

(3) Investigation No. 337–TA–67 is designated "more complicated" within the meaning of 19 U.S.C. 1337(b)(1) and 19 CFR 210.15, allowing 6 additional months for completion of the investigation.

By order of the Commission.

Issued: May 6, 1980.

KENNETH R. MASON,
Secretary.

Investigation No. 701–TA–63 (Final)

TEXTILES AND TEXTILE PRODUCTS OF COTTON FROM PAKISTAN

Notice of Institution of Final Countervailing Duty Investigation and Scheduling of Hearing

AGENCY: U.S. International Trade Commission.

ACTION: Institution of a final countervailing duty investigation.

SUMMARY: As a result of a request by the Government of Pakistan for review of an outstanding countervailing duty order issued by the U.S. Department of Commerce, that subsidies are being paid on certain textiles and textile products from Pakistan described hereinafter, the Commission hereby gives notice of the institution of investigation No. 701–TA–63 (final) to determine whether an industry in the United States would be materially injured, or would be threatened with material injury, or the establishment of an industry in the United States would be materially retarded, by reason of imports of the merchandise covered by the countervailing duty order announced on July 13, 1979, (44 F.R. 40884), if that order were revoked. The textiles and textile products which are the subject of this investigation are the same as those covered by the Federal Register notice of April 16, 1980 (45 F.R. 25977) instituting investigation No. 701–TA–62 (final), except for cotton towels provided for in items 366.18, 366.21, 366.24, and 366.27 of the Tariff Schedules of the United States which are not covered by the Commerce Department's outstanding countervailing duty order and therefore are not included in this investigation.

EFFECTIVE DATE: May 2, 1980.

FOR ADDITIONAL INFORMATION, CONTACT: Ms. Vera Libeau, Senior Investigator, Office of Operations, U.S. International Trade Commission, room 339, 701 E Street NW., Washington, D.C. 20436; telephone 202–523–0368.

SUPPLEMENTARY INFORMATION: The provisions of the

Trade Agreements Act of 1979 (Public Law 96–39, 93 Stat. 144) amending the Tariff Act of 1930 (19 U.S.C. 1303) (hereinafter "the Act") became effective on January 1, 1980. The provisions of sections 104(b) (1) and (2) provide that in the case of a countervailing duty order issued under section 303 of the act—

(A) Which is not a countervailing duty order to which subsection (a) applies,

(B) Which applies to merchandise which is the product of a country under the agreement, and

(C) Which is in effect on January 1, 1980, or which is issued pursuant to court order in an action brought under section 516(d) of that act before that date,

upon the request of the government of such a country or of exporters accounting for a significant proportion of exports to the United States of merchandise which is covered by the order, submitted within 3 years after the effective date of title VII of the act, the Commission shall commence an investigation to determine whether—

(A) An industry in the United States—

(i) Would be materially injured, or

(ii) Would be threatened with material injury, or

(B) The establishment of an industry in the United States would be materially retarded,

by reason of imports of the merchandise covered by the countervailing duty order if the order were to be revoked.

Section 104(b)(3) required that the determination shall be made not later than 3 years after the commencement date of the investigation. However, pursuant to section 207.32 of the Commission's Rules of Practice and Procedure (19 CFR 207.32) this investigation shall be conducted in accordance with the procedures and time limitations prescribed by part 207, subpart C (19 CFR 207) applying to final investigations as to whether injury to domestic industries results from subsidized exports to the United States. Inasmuch as the products covered by this investigation are the same as those covered in investigation No. 701–TA–62 (final), textiles and textile products of cotton from Pakistan, except as specified above, the two investigations will be conducted concurrently.

WRITTEN SUBMISSIONS: Any person may submit a written statement of information pertinent to the subject matter of this investigation. A signed original and 19 true copies of each submission must be filed at the Office of the Secretary, U.S. International Trade Commission Building, 701 E Street NW., Washington, D.C. 20436, on or before June 30, 1980.

All written submissions, except for confidential business data, will be available for inspection by interested persons at the Office of the

Secretary and in the Commission's New York Office, 6 World Trade Center, New York, N.Y. 10048. Any submission of business information for which confidential treatment is desired shall be submitted separately from other documents. The envelope and all pages of such submissions must be clearly labeled "Confidential business information." Confidential submissions and requests for confidential treatment must conform with the requirements of section 201.6 of the Commission's Rules of Practice and Procedure (19 CFR 201.6).

A staff report containing preliminary findings of fact will be available to all interested parties on June 3, 1980.

HEARING: The Commission will hold a hearing in connection with this investigation on June 25, 1980. It will be held in the hearing room of the U.S. International Trade Commission Building, 701 E Street NW., Washington, D.C. 20436, and will begin at 10 a.m., e.d.t. Parties wishing to participate should notify the Office of the Secretary not later than 5 days prior to the date of the hearing. In addition, all parties desiring to appear at the hearing and make oral presentations must submit prehearing statements. Such statements must be filed on or before June 17, 1980. For further information concerning the conduct of the investigation, hearing procedures, and rules of general application, consult the Commission's Rules of Practice and Procedure, part 207, subpart C (19 CFR 207), and part 201, subparts A through E (19 CFR 201).

This notice is published pursuant to section 207.20 of the Commission's Rules of Practice and Procedure (19 CFR 207.20, 44 F.R. 76458).

By order of the Commission.

Issued: May 5, 1980.

KENNETH R. MASON,
Secretary.

Notice of Investigation (332–108)

Study of the Multifiber Arrangement

AGENCY: U.S. International Trade Commission.

ACTION: In accordance with the provisions of section 332 of the Tariff Act of 1930 (19 U.S.C. 1332), the Commission has instituted investigation No. 332–108 for the purpose of gathering and presenting information on trade in textile products covered under the Arrangement Regarding International Trade in Textiles, December 20, 1973,

25 UST 1001, TIAS No. 7840, extended December 15, 1977, TIAS No. 8839, known as the Multifiber Arrangement (MFA). Data will be provided to show U.S. imports by country, by MFA category, and by fiber and product, and the import restraint levels in the bilateral agreements which the United States has entered into under the MFA will be compared with actual imports. In addition, the report will describe the administration and monitoring of quotas, examine changes in quota levels that occurred during the lifetime of the bilateral agreements, and discuss the tightening of those agreements in accordance with the commitments in the administration's textile program. The report will build on an earlier study released by the Commission, The History and Current Status of the Multifiber Arrangement, USITC Publication 850 (1978).

This report will assist in an accurate review and analysis of experience with the current MFA and provide a basis for developing a position with regard to any subsequent negotiated extension and its likely impact on the textile program.

EFFECTIVE DATE: May 1, 1980.

FOR FURTHER INFORMATION CONTACT: Mr. Reuben Schwartz or Mr. John Taylor, Textiles, Leather Products, and Apparel Division, U.S. International Trade Commission, Washington, D.C. 20436; phone 202-523-0114 or 202-523-0365.

WRITTEN SUBMISSIONS: Since there will be no public hearing scheduled for this study, written submissions from interested parties are invited concerning any phase of the study. Commercial or financial information which a party desires the Commission to treat as confidential must be submitted on separate sheets of paper, each clearly marked "Confidential Business Information" at the top. All submissions requesting confidential treatment must conform with the requirements of section 201.6 of the Commission's Rules of Practice and Procedure (19 CFR 201.6). All written submissions, except for confidential business information, will be made available for inspection by interested persons. To be assured of consideration by the Commission in this study, written statements should be submitted at the earliest practicable date, but no later than October 15, 1980. All submissions should be addressed to the Secretary at the Commission's office in Washington, D.C.

By order of the Commission.

Issued: May 7, 1980.

KENNETH R. MASON,
Secretary.

In the Matter of CERTAIN AIRTIGHT CAST-IRON STOVES	Investigation No. 337-TA-69

Notice of Prehearing Conference and Hearing

Notice is hereby given that a prehearing conference will be held in this case at 10 a.m., on June 2, 1980, in the Dodge Center, second floor, 1010 Wisconsin Avenue NW., Washington, D.C. The purpose of this prehearing conference is to review the prehearing statements submitted by the parties, to stipulate into the record as many exhibits as possible, and to discuss any questions raised by the parties relating to the hearing.

Notice is also given that the hearing in this proceeding will commence at 9 a.m., on June 3, 1980, in the Dodge Center, second floor, 1010 Wisconsin Avenue NW., Washington, D.C.

The Secretary shall publish this notice in the Federal Register.

Issued: May 7, 1980.

JANET D. SAXON,
Administrative Law Judge.

Index

U.S. Customs Service

Treasury decisions:
American Manufacturer's petition decision; scrap and cigarette leaf tobacco ..... T.D. No. 80-132
Cotton and manmade fiber textile products—restricted on entry—Dominican Republic 80-123
Manmade fiber textiles—restriction on entry—Malaysia 80-124
Cotton textile products—restriction on entry—Brazil 80-125
Foreign currencies:
Daily certified rates; March 31–April 4, 1980 80-127
Daily certified rates; April 7–11, 1980 80-128
Daily certified rates; April 14–18, 1980 80-129
Rates which varied from quarterly rate; week of April 14–18, 1980 80-130
Rates which varied from quarterly rate; week of April 10, 1980 80-131

Customs Court

Antidumping finding; golf cars from Poland, C.D. 4854
Confidential information:
Court-ordered disclosure, action seeking, C.D. 4854
Disclosure of; International Trade Commission, C.D. 4854
Construction:
Public Law 96-39, 93 Stat. 144, C.D. 4854
Tariff Act of 1930:
Sec. 516A(2)(B)(iii), C.D. 4854
Sec. 732, C.D. 4854
Sec. 751, C.D. 4854
Sec. 777(c)(1), C.D. 4854
Sec. 777)c)(2), C.D. 4854
Trade Agreements Act of 1979, 93 Stat. 144, C.D. 4854
Court-ordered disclosure, action seeking; confidential information, C.D. 4854
Cross-motion for summary judgment, C.D. 4854
Disclosure, court-ordered, C.D. 4854
Electric golf cars from Poland, ITC investigation; opinion and order of U.S. Customs Court, C.D. 4854
Failure to state a claim; motion to dismiss granted, C.D. 4854
Golf cars from Poland; antidumping finding, C.D. 4854
International Trade Commission; confidential information, disclosure of, C.D. 4854
Legislative history; S. Rep. No. 96-249, 96th Cong., 1st Sess. 100 (1979), C.D. 4854
Motion for summary judgment, C.D. 4854

Motion to dismiss granted; failure to state a claim, C.D. 4854
Opinion and order of U.S. Customs Court; electric golf cars from Poland, ITC investigation, C.D. 4854
Poland, electric golf cars from, C.D. 4854
Rehearing, decision on motion for, denied (p. —); household articles; champagne goblets
Summary judgment:
    Cross-motion for, C.D. 4854
    Motion for, C.D. 4854
Words and phrases; petitioner, C.D. 4854

320-978
372
JUN 1980
Item 950-D T 1.11/3:14/23
Cortis

Customs Bulletin

Regulations, Rulings, Decisions, and Notices concerning Customs and related matters

and Decisions

of the United States Court of Customs and Patent Appeals and the United States Customs Court

Vol. 14 JUNE 4, 1980 No. 23

9247

This issue contains

T.D. 80–133 through 80–140
C.S.D. 80–51 through 80–55
C.R.D. 80–4
Protest abstracts P80/67 through P80/70
Reap. abstracts R80/144 through R80/156
International Trade Commission Notice

THE DEPARTMENT OF THE TREASURY
U.S. Customs Service

H.D.

NOTICE

The abstracts, rulings, and notices which are issued weekly by the U.S. Customs Service are subject to correction for typographical or other printing errors. Users may notify the U.S. Customs Service, Logistics Management Division, Washington, D.C. 20229, of any such errors in order that corrections may be made before the bound volumes are published.

For sale by the Superintendent of Documents, U.S. Government Printing Office, Washington, D.C. 20402. Price: $1.30 (single copy domestic); $1.65 (single copy foreign). Subscription price: $65.00 a year domestic; $81.25 a year foreign.

U.S. Customs Service

Treasury Decisions

(T.D. 80–133)

(19 CFR Parts 113, 153, and 159)

Transfer of Antidumping and Countervailing Duty Functions

AGENCY: U.S. Customs Service, Department of the Treasury.

ACTION: Notice of transfer of functions.

SUMMARY: This document advises the public that (1) the antidumping and countervailing duty functions formerly exercised by the Department of the Treasury have been transferred to the Department of Commerce; (2) new antidumping and countervailing duty regulations have been issued, and will be enforced, by the Department of Commerce; and (3) the Customs Regulations will be amended in a forthcoming Federal Register document to reflect the transfer of functions and to make other changes conforming the regulations to the Trade Agreements Act of 1979.

FOR FURTHER INFORMATION CONTACT: Arthur I. Rettinger, Office of the Chief Counsel, U.S. Customs Service, 1301 Constitution Avenue NW., Washington, D.C. 20229, 202–566–6245.

SUPPLEMENTARY INFORMATION:

TRANSFER OF FUNCTIONS

The Trade Agreements Act of 1979, Public Law 96–39, enacted July 26, 1979 (the act), repealed the Antidumping Act, 1921 (19 U.S.C. 160 et seq.) and significantly amended section 303, Tariff Act of 1930 (19 U.S.C. 1303), relating to the assessment of countervailing duties.

Title I of the act, "Countervailing and Antidumping Duties", establishes new law in both of those areas.

Subsequent to the foregoing legislative action, Reorganization Plan No. 3 of 1979 (44 F.R. 69273; Dec. 3, 1979) transferred responsi-

bility for the administration of the antidumping and countervailing duty laws from the Secretary and General Counsel of the Departmetn of the Treasury, and from the Department itself, to the Secretary of Commerce. The transfer of functions was made effective on January 2, 1980, by Executive Order 12188 (45 F.R. 989).

NEW DEPARTMENT OF COMMERCE REGULATIONS

The International Trade Administration, Department of Commerce, published new countervailing and antidumping duty regulations in the Federal Register on January 22, 1980, and February 6, 1980, respectively (45 F.R. 4932, 8182), to implement the statutory changes made by the act. The antidumping regulations are contained in part 353 of new chapter III, title 19, Code of Federal Regulations 19 CFR, chap. III). Countervailing duty regulations appear as part 355 of chapter III.

AMENDMENTS TO CUSTOMS REGULATIONS

Because of the statutory changes and transfer of functions described above, parts 113, 153, and 159 of chapter I, title 19, Code of Federal Regulations (19 CFR, chap. I, pts. 113, 153, 159), will be amended as follows:

1. Section 113.14(q) (19 CFR 113.14(q)), "Antidumping Bond, Customs Form 7591," will be deleted;
2. Part 153 (19 CFR, pt. 153), "Antidumping," will be deleted;
3. Section 159.41 (19 CFR 159.41), "Antidumping duties," will be amended to refer to the new Department of Commerce regulations;
4. Section 159.47 (19 CFR 159.47), "Countervailing duties," will be amended to refer to the new Department of Commerce regulations; and
5. A new section 159.58 (19 CFR 159.58), pertaining to the suspension of liquidation in antidumping and countervailing duty cases, will be added.

Those amendments are needed to ensure the continued efficient administration of the antidumping and countervailing duty laws.

Final amendments to the Customs Regulations, including the changes noted above, will be made in a separate comprehensive document which will be published shortly in the Federal Register and which will conform the Customs Regulations to the provisions of the act. Until that document is published, the public is advised that the antidumping and countervailing duty regulations promulgated by the Department of Commerce and codified in chapter III of title 19, Code of Federal Regulations, supersede the antidumping and countervailing

duty regulations set forth in parts 113, 153, and 159 of chapter I of the Code of Federal Regulations.

Dated: May 19, 1980.

WILLIAM T. ARCHEY,
Acting Commissioner of Customs.

(T.D. 80-134)

Customhouse Broker License—Cancellation

Cancellation without prejudice of customhouse broker license 3761

Notice is hereby given that the Commissioner of Customs, on May 16, 1980, pursuant to section 641, Tariff Act of 1930, as amended (19 CFR 111.51(a)), upon the specific request of John A. Bartolomei, Chicago, Ill., canceled without prejudice individual customhouse broker's license No. 3761 issued to him on February 15, 1966, for the Customs District of Chicago, Ill. The Commissioner's decision is effective as of May 16, 1980.

Dated: May 16, 1980.

WILLIAM T. ARCHEY
(For Commissioner of Customs).

(T.D. 80-135)

Customhouse Broker License—Cancellation

Cancellation without prejudice of customhouse broker license 3281

Notice is hereby given that the Commissioner of Customs, on May 16, 1980, pursuant to section 641, Tariff Act of 1930, as amended (19 CFR 111.51(a)), upon the specific request of Mark M. Trilling, Elmwood Park, Ill., canceled without prejudice individual customhouse broker's license No. 3281 issued to him on November 16, 1960, for the Customs District of Chicago, Ill. The Commissioner's decision is effective as of May 16, 1980.

Dated: May 16, 1980.

WILLIAM T. ARCHEY
(For Commissioner of Customs).

(T.D. 80-136)

Customhouse Broker License—Cancellation

Cancellation without prejudice of customhouse broker license 3027

Notice is hereby given that the Commissioner of Customs, on May

16, 1980, pursuant to section 641, Tariff Act of 1930, as amended (19 CFR 111.51(a)), upon the specific request of Edward Limperis, assignee for the benefit of the creditors of Gallagher & Ascher Co., and Margaret A. Gillespie, president, Gallagher & Ascher Co., canceled without prejudice corporate customhouse broker's license No. 3027 issued to it on May 10, 1957, for the Customs District of Chicago, Ill. The Commissioner's decision is effective as of May 16, 1980.

Dated: May 16, 1980.

WILLIAM T. ARCHEY
(For Commissioner of Customs).

(T.D. 80-137)

Imported Lightweight Cab Chassis

Change of practice regarding tariff classification

AGENCY: U.S. Customs Service, Department of the Treasury.

ACTION: Change of practice.

SUMMARY: This document announces that Customs has found the current uniform and established practice of classifying imported lightweight cab chassis under the provision for bodies (including cabs) and chassis, in item 692.20, Tariff Schedules of the United States (TSUS), dutiable at the rate of 4 percent ad valorem, to be clearly wrong. That practice is being changed because it conflicts with principles announced in the decision of the U.S. Court of Customs and Patent Appeals in *Daisy-Heddon, Div. Victor Comptometer Corp.* v. *United States*, C.A.D. 1228 (1979).

Effective 90 days after publication of this notice in the Federal Register, it will be Customs practice to classify imported lightweight cab chassis under the provision for automobile trucks valued at $1,000 or more in item 692.02, TSUS, dutiable at the rate of 25 percent ad valorem under item 945.69, TSUS.

EFFECTIVE DATE: Ninety days after publication of this notice in the Federal Register.

FOR FURTHER INFORMATION CONTACT: Thomas L. Lobred, Classification and Value Division, U.S. Customs Service, 1301 Constitution Avenue NW., Washington, D.C. 20229, 202-566-2938.

SUPPLEMENTARY INFORMATION:

BACKGROUND

In a notice published in the Federal Register on September 2, 1975 (40 F.R. 40190), and modified on October 10, 1975 (40 F.R. 47806), Customs announced that it was reviewing its practice concerning the tariff classification of cab chassis (consisting of frames, suspension

systems, wheels, engines, steering mechanisms, and cabs) without bodies, having very limited cargo carrying capacity in their condition as imported. This action was taken after the contention was advanced that cab chassis should be classified under the provision for automobile trucks valued at $1,000 or more, in item 692.02, TSUS (19 U.S.C. 1202), dutiable at the rate of 25 percent ad valorem under item 945.69, TSUS, rather than under the provision for chassis, bodies (including cabs) and parts, in item 692.20, TSUS.

After a review of the comments submitted in response to the notice, Customs concluded that the existing practice of classifying cab chassis was correct and should not be changed.

Following Customs decision in this matter, the General Accounting Office (GAO), at the request of the Committee on Ways and Means, U.S. House of Representatives, examined Customs classification practice regarding imported cab chassis. The report subsequently issued by the GAO noted that while it was difficult to conclude that the current classification practice was clearly wrong, the GAO was of the opinion that the practice was questionable (Report by the Comptroller General of the United States, GGD 79–19, Dec. 13, 1978). After reviewing the GAO report, in January 1979, the Treasury Department reaffirmed the correctness of the existing practice of classifying imported cab chassis as parts. The International Trade Commission (ITC) subsequently released a report commenting on the GAO study (Assessment of the December 13, 1978, Report of the Comptroller General of the United States, May 18, 1979). The ITC report concluded that the present cab chassis classification practice was "clearly wrong."

The Customs practice of classifying cab chassis as chassis was based in large part on the determination that an essential part of a truck was missing, following the opinion of the U.S. Court of Customs and Patent Appeals in *Authentic Furniture Products, Inc.* v. *United States*, 61 CCPA 5, C.A.D. 1109 (1973). However, in June 1979, that court issued a decision which expressly overruled the majority rationale in *Authentic Furniture* (*Daisy-Heddon, Div. Victor Comptometer* v. *United States*, C.A.D. 1228 (1979)).

In *Daisy-Heddon*, the Court stated:

> * * * The result in *Authentic Furniture Products* does not merely depend on the "essential" nature, be it functional or commercial, of the omitted side rails. It is abundantly clear from the opinion of the Customs Court, which was approved by this court, that the basis of the decision in that case was that "it is the determination of this court that the importations do not constitute a substantially complete article." (68 Cust. Ct. at 215, 343 F. Supp. at 1380.) Such a determination does not depend merely on the presence or absence of an "essential" part.
>
> There are several factors which may come into play in the

determination of whether an article is substantially complete. In a case such as this, where the article is incomplete due to the omission of one or more parts, as opposed to where an article is incomplete because the material which comprises the article is in need of further processing, the following factors can be relevant: (1) Comparison of the number of omitted parts with the number of included parts; (2) comparison of the time and effort required to complete the article with the time and effort required to place it in its imported condition; (3) comparison of the cost of the included parts with that of the omitted parts; (4) the significance of the omitted parts to the overall functioning of the completed article; and, (5) trade customs, i.e., does the trade recognize the importation as an unfinished article or as merely a part of that article. This list of factors is not exhaustive; it must be recognized that fewer than all of the above factors, or additional factors, may come into play depending on the particular importation. The outcome of each case will always depend on the particular merchandise involved. It would be oversimplification of an essentially difficult juridical problem, often involving a determination of congressional intent, for us to attempt to provide anything more than guidelines for the trier of fact to follow in assessing a given case. * * *

On October 17, 1979, a general notice was published in the Federal Register (44 F.R. 59984) advising that, in view of the decision in *Daisy-Heddon*, Customs was reconsidering its practice of classifying imported cab chassis under the provision for bodies (including cabs) and chassis in item 692.20, TSUS.

As part of this review, Customs requested comments concerning the application of *Daisy-Heddon* to the tariff classification of cab chassis. The comments were to be directed primarily to the following issues:

(1) Are the five factors cited by the Court in *Daisy-Heddon* applicable to the tariff classification of cab chassis or should other factors or expressions of legislative intent govern?

(2) If the five factors are applicable, what manner should they be applied? (Factual information regarding the number and relative value of parts involved may be relevant to this question.)

(3) Does the opinion of the Court in *Daisy-Heddon* require a finding that cab chassis should be classified under the superior heading "Motor vehicles (except motorcycles) for the transport of persons or articles"?

(4) If so, should they be classified under the inferior heading "Automobile trucks valued at $1,000 or more, and motor buses: Automobile trucks" (692.02, TSUS) or as "Other" (692.10, TSUS):

Comments were to have been received on or before December 17, 1979. However, in response to a request for an extension, the time for submission of comments was extended to January 31, 1980, by notice published in the Federal Register on December 14, 1979 (44 F.R. 72699).

COMMENTS

In response to the notice, comments were received from 34 domestic and foreign manufacturers, foreign governments, trade associations, labor unions, law firms, and members of the public and Congress. In general, domestic producers and the United Auto Workers Union argued for reclassification of cab chassis as unfinished trucks, whereas importers argued that the present classification was correct.

CHANGE OF PRACTICE

After careful consideration of all comments received Customs has concluded that the present practice of classifying cab chassis as chassis under item 692.20, TSUS, is clearly wrong with respect to lightweight cab chassis. These imports will be reclassified as unfinished automobile trucks, pursuant to general interpretative rule 10(h) of the TSUS and the Court of Customs and Patent Appeals decision in *Daisy-Heddon, supra*. The reasons for this decision are set forth below.

Cab chassis or chassis cabs have been defined as "an incomplete vehicle, with a completed occupant compartment, that requires only the addition of cargo-carrying, work-performing, or load-bearing components to perform its intended functions" (40 F.R. 45847, Oct. 3, 1975). Chassis, in contrast, are "the basic operating motor vehicle including engine, frame, and other essential structural and mechanical parts but exclusive of body and all appurtenances for the accommodation of driver, property, or passengers, appliances, or equipment related to other than control" (Society of Automotive Engineers, Nomenclature Standard SAE J687c). However, "If a cab or cowl is included, the designation shall be motor vehicle chassis with cab or cowl" (Id).

Imported cab chassis vary from lightweight cab chassis that can be driven "as is" as a passenger vehicle, or converted in a few minutes for a small percentage of total manufacturing cost into a pickup truck, to heavy-duty, cab over engine cab chassis that may require the installation of thousands of dollars of additional equipment before they can be used.

We believe it appropriate to apply the five decisional factors set forth by the Court of Customs and Patent Appeals in the *Daisy-Heddon* opinion to determine the classification of cab chassis imports.

The court in *Daisy-Heddon* was of the view that in cases where the article is incomplete due to the omission of one or more parts, as opposed to where an article is incomplete because the material which comprises the article is in need of further processing, the five decisional factors listed above are relevant. As is discussed below, we have found no reason to deviate from that approach in this case.

In past decisions maintaining the present practice, some weight

320-978 O - 80 - 2

has been given to two indications of congressional intent to classify cab chassis as parts. These are (1) headnote 1(b) of schedule 6, subpart B of the TSUS, which provides that truck tractors, which are similar to cab chassis but with a fifth wheel added for coupling, are to be classified as parts when imported separately from truck trailers, and (2) the absence from the TSUS of the explanatory note to chapter 87 of the Brussels Tariff Nomenclature, which provides for the classification of cab chassis as motor vehicles. We do not believe these to be sufficiently strong evidence of congressional intent to outweigh the other factors present. Moreover, these factors appear to be more relevant to the classification of medium and heavyweight (as opposed to lightweight) cab chassis.

Some commentors argue that the *Daisy-Heddon* opinion, which decided whether imports were classifiable as parts of a particular article, or as that article itself, is not relevant to the classification of cab chassis as chassis or trucks because these are eo nomine tariff provisions.

We disagree with this assertion. The cab chassis at issue here are not clearly within the eo nomine provision. Under that circumstance, we deem the factors announced in *Daisy-Heddon* to be a reasonable way of distinguishing between an unfinished truck and any lesser assemblage of parts.

Many of the commentors argue that trade policy considerations should govern the classification decision herein. In our view, Customs classification decisions must be limited to interpretation of congressional intent as expressed in the Tariff Schedules and legislative history, and judicial and administrative decisions interpreting the Schedules. In other words, trade policy considerations cannot decide the legal, interpretative question: What is the proper tariff classification for a particular class of imported merchandise? This is not to say that we are unmindful of the economic consequences of classification decisions. However, it is the responsibility of other agencies of Government—specifically the Congress, and the U.S. Trade Representative—to address the results of classification decisions that are believed to be undesirable from the standpoint of trade policy.

Customs believes that the application of the *Daisy-Heddon* guidelines quoted above to the classification of lightweight cab chassis imports requires a finding that the present practice of classifying these imports as chassis or parts is clearly wrong, and that they should be reclassified under item 692.02, TSUS, as automobile trucks valued at $1,000 or more.

In comparing the number of parts omitted with those included, it was shown that there are approximately 4,500 parts in a cab chassis, but only 120 in a cargo box. It was demonstrated that the cargo box

can be assembled with minimal effort, and that its value in the case of one of the shortbed pickups was estimated to be $375 as compared with $5,100 total selling price (7 percent). While cargo boxes are significant to the functioning of the completed vehicle, most lightweight cab chassis can be used to move passengers and, to some extent, cargo without being completed. Furthermore, it was demonstrated that, according to trade custom, cab chassis are recognized as unfinished trucks. Therefore, in the future, Customs wlll classify lightweight imported cab chassis under the provision for automobile trucks valued at $1,000 or more in item 692.02, TSUS, presently dutiable at the rate of 25 percent ad valorem under item 945.69, TSUS.

With respect to other than lightweight cab chassis, the comments received lead us to conclude that the application of the *Daisy-Heddon* factors to mediumweight and heavyweight vehicles does not require a conclusion that Customs present practice is clearly wrong. The comments indicate that the number of parts added to the chassis varies depending on the changes made to the chassis after importation. Changes usually are beyond the control of the importer, who is unconcerned with alterations made to the imported cab chassis by the customer.

Following importation, chassis frequently are made into garbage trucks, beer trucks, et cetera, by parties other than the importer. They also indicate that the time and effort required to perform these changes can be significant and may take several days, or up to 40 or 50 man-hours. Regarding cost of parts, the customer's bodywork can equal more than 50 percent of the total vehicle cost. The missing parts are significant because as imported, cab chassis have no functional use other than for resale to manufacturers. Finally, it was shown that trade custom treats these imported vehicles as chassis. In view of the above evidence, Customs is prepared to review petitions, should any be received regarding the classification of mediumweight and heavyweight cab chassis on a case-by-case basis to determine whether a change in classification is warranted.

The change in practice regarding lightweight cab chassis shall be effective as to merchandise entered for consumption or withdrawn from warehouse for consumption on or after 90 days from the date of publication of this notice in the Federal Register.

R. E. Chasen,
Commissioner of Customs.

Approved: May 19, 1980.
Richard J. Davis,
Assistant Secretary of the Treasury.

(T.D. 80-138)

Foreign Currencies—Daily Rates for Countries not on Quarterly List

Rates of exchange based on rates certified to the Secretary of the Treasury by the Federal Reserve Bank of New York for the Brazil cruzeiro, People's Republic of China yuan, Hong Kong dollar, Iran rial, Philippines peso, Singapore dollar, Thailand baht (tical) and Venezuela bolivar

The Federal Reserve Bank of New York, pursuant to section 522(c), Tariff Act of 1930, as amended (31 U.S.C. 372(c)), has certified buying rates for the dates and foreign currencies shown below. The rates of exchange, based on these buying rates, are published for the information and use of Customs officers and others concerned pursuant to part 159, subpart C, Customs Regulations (19 CFR 159, subpart C).

Brazil cruzeiro:	
April 21–22, 1980	$0.0207
April 23–25, 1980	.0204
People's Republic of China yuan:	
April 21–23, 1980	$0.649857
April 24–25, 1980	.660415
Hong Kong dollar:	
April 21–22, 1980	$0.201045
April 23, 1980	.202840
April 24, 1980	.203666
April 25, 1980	.203874
Iran rial:	
April 21–25, 1980	Not available
Philippines peso:	
April 21–25, 1980	$0.1345
Singapore dollar:	
April 21, 1980	$0.451773
April 22, 1980	.451060
April 23, 1980	.454545
April 24, 1980	.461255
April 25, 1980	.461894
Thailand baht (tical):	
April 21–25, 1980	$0.0490
Venezuela bolivar:	
April 21–25, 1980	$0.2329

(LIQ-3-TRODE)

Dated: May 16, 1980.

CHESTER R. KRAYTON,
Director, Duty Assessment Division.

(T.D. 80-139)

Foreign Currencies—Daily Rates for Countries not on Quarterly List

Rates of exchange based on rates certified to the Secretary of the Treasury by the Federal Reserve Bank of New York for the Brazil cruzeiro, People's Republic of China yuan, Hong Kong dollar, Iran rial, Philippines peso, Singapore dollar, Thailand baht (tical) and Venezuela bolivar.

The Federal Reserve Bank of New York, pursuant to section 522(c), Tariff Act of 1930, as amended (31 U.S.C. 372 (c), has certified buying rates for the dates and foreign currencies shown below. The rates of exchange, based on these buying rates, are published for the information and use of Customs officers and others concerned pursuant to part 159, subpart C, Customs Regulations (19 CFR 159, subpart C).

Brazil cruzeiro:	
April 28, 1980	$0.0205
April 29–May 2, 1980	.0204
People's Republic of China yuan:	
April 28, 1980	$0.660415
April 29–May 2, 1980	.663746
Hong Kong dollar:	
April 28, 1980	$0.205550
April 29, 1980	.204290
April 30, 1980	.203459
May 1, 1980	.202716
May 2, 1980	.202143
Iran rial:	
April 28–May 2, 1980	Not available
Philippines peso:	
April 28–May 2, 1980	$0.1345
Singapore dollar:	
April 28, 1980	$0.460299
April 29, 1980	.457247
April 30–May 1, 1980	.456204
May 2, 1980	.456621
Thailand baht (tical):	
April 28–May 2, 1980	$0.0490
Venezuela bolivar:	
April 28–May 2, 1980	$0.2329

(LIQ-3-TRODE)

Dated: May 16, 1980.

CHESTER R. KRAYTON,
Director, Duty Assessment Division.

(T.D. 80–140)

Foreign Currencies—Variances From Quarterly Rate

Rates of exchange based upon rates certified to the Secretary of the Treasury by the Federal Reserve Bank of New York

The following rates of exchange are based upon rates certified to the Secretary of the Treasury by the Federal Reserve Bank of New York, pursuant to section 522(c), Tariff Act of 1930, as amended (31 U.S.C. 372(c)), and reflect variances of 5 per centum or more from the quarterly rate published in T.D. 80–103 for the following countries. Therefore, as to entries covering merchandise exported on the dates listed, whenever it is necessary for Customs purposes to convert such currency into currency of the United States, conversion shall be at the following rates:

Austria schilling:	
April 21, 1980	$0.075815
April 22, 1980	.075415
April 23, 1980	.076453
April 24, 1980	.077190
April 25, 1980	.077220
Belgium franc:	
April 21, 1980	$0.033613
April 22, 1980	.033501
April 23, 1980	.034294
April 24, 1980	.034352
April 25, 1980	.034483
Denmark krone:	
April 21, 1980	$0.173491
April 22, 1980	(1)
April 23, 1980	.175469
April 24, 1980	.175346
April 25, 1980	.175623
France franc:	
April 23, 1980	$0.235128
April 24, 1980	.235933
April 25, 1980	.236546
Germany deutsche mark:	
April 21, 1980	$0.540979
April 22, 1980	.537057
April 23, 1980	.548546
April 24, 1980	.549602
April 25, 1980	.551572

Ireland pound:	
April 21, 1980	$2.0190
April 22, 1980	2.0200
April 23, 1980	2.0360
April 24, 1980	2.0445
April 25, 1980	2.0450
Italy lira:	
April 23, 1980	$0.001168
April 24, 1980	.001175
April 25, 1980	.001178
Netherlands guilder:	
April 21, 1980	$0.491884
April 22, 1980	.489476
April 23–24, 1980	.498753
April 25, 1980	.501002
Sweden Krona:	
April 24, 1980	$0.233918
April 25, 1980	.234192
Switzerland franc:	
April 21, 1980	$0.580046
April 22, 1980	.573394
April 23, 1980	.588582
April 24, 1980	.588062
April 25, 1980	.590319
United Kingdom pound:	
April 23, 1980	$2.2690
April 24, 1980	2.2635
April 25, 1980	2.2735

[1] Rate did not vary this date. Use quarterly rate.

(LIQ)-3-TRODE)

Dated: May 19, 1980.

CHESTER R. KRAYTON,
Director, Duty Assessment Division.

(T.D. 80-141)

Foreign Currencies—Variances From Quarterly Rate

Rates of exchange based upon rates certified to the Secretary of the Treasury by the Federal Reserve Bank of New York

The following rates of exchange are based upon rates certified to the Secretary of the Treasury by the Federal Reserve Bank of New

York, pursuant to section 522(c), Tariff Act of 1930, as amended (31 U.S.C. 372(c)), and reflect variances of 5 per centum or more from the quarterly rate published in T.D. 80–103 for the following countries. Therefore, as to entries covering merchandise exported on the dates listed, whenever it is necessary for Customs purposes to convert such currency into currency of the United States, conversion shall be at the following rates:

Austria schilling:	
April 28, 1980	$0.078003
April 29, 1980	.077700
April 30–May 1, 1980	.077760
May 2, 1980	.076628
Belgium franc:	
April 28, 1980	$0.034686
April 29, 1980	.034542
April 30, 1980	.034447
May 1, 1980	.034435
May 2, 1980	.034153
Denmark krone:	
April 28, 1980	$0.177494
April 29, 1980	.177620
April 30, 1980	.177368
May 1, 1980	.177211
May 2, 1980	.175285
Finland markka:	
April 28, 1980	$0.268276
April 29, 1980	.269107
April 30, 1980	.269034
May 1, 1980	.268817
May 2, 1980	.269034
France franc:	
April 28, 1980	$0.238265
April 29, 1980	.237982
April 30, 1980	.237869
May 1, 1980	.237727
May 2, 1980	.235433
Germany deutsche mark:	
April 28, 1980	$0.556081
April 29, 1980	.556638
April 30, 1980	.555556
May 1, 1980	.554939
May 2, 1980	.548396
India rupee:	
April 28–May 2, 1980	$0.1266

Ireland pound:	
April 28, 1980	$2.0620
April 29, 1980	2.0570
April 30, 1980	2.0510
May 1, 1980	3.0530
May 2, 1980	2.0320
Italy lira:	
April 28, 1980	$0.001181
April 29, 1980	.001182
April 30, 1980	.001180
May 1, 1980	.001182
May 2, 1980	.001172
Japan yen:	
April 28, 1980	$0.004144
April 29, 1980	.004179
April 30, 1980	.004178
May 1, 1980	.004158
May 2, 1980	.004161
Netherlands guilder:	
April 28, 1980	$0.503271
April 29, 1980	.502008
April 30, 1980	.502134
May 1, 1980	.501505
May 2, 1980	.494438
Norway krone:	
April 28, 1980	$0.202593
April 29, 1980	.202778
April 30, 1980	.202675
May 1, 1980	.202429
May 2, 1980	.201816
Portugal escudo:	
April 28, 1980	$0.020284
Sweden krona:	
April 28, 1980	$0.235377
April 29, 1980	.237530
April 30, 1980	.237643
May 1, 1980	.237248
May 2, 1980	.234192
Switzerland franc:	
April 28, 1980	$0.598265
April 29, 1980	.598802
April 30, 1980	.599700
May 1, 1980	.599520
May 2, 1980	.589971

320-978 O - 80 - 3

United Kingdom pound:

April 28, 1980	$2.2830
April 29, 1980	2.2695

(LIQ-3-TRODE)

Dated: May 19, 1980.

CHESTER R. KRAYTON,
Director, Duty Assessment Division.

U.S. Customs Service

Customs Service Decisions

The following are decisions made by the U.S. Customs Service where the issues involved are of sufficient interest or importance to warrant publication in the CUSTOMS BULLETIN.

Dated: May 19, 1980.

SALVATORE E. CARAMAGNO,
Acting Director, Office of Regulations and Rulings.

(C.S.D. 80-51)

Entry: Merchandise Appearing on a Single Invoice When Different Dates of Exportation Are Invoiced

Date: July 23, 1979
File: ENT-1-01-R:E:E
710719 MK

This ruling concerns the authority of a district director to require that merchandise listed on a single invoice be separately listed on the entry or entry summary form.

Issue.—May a district director legally require that merchandise listed on a single invoice (special summary steel invoice or special customs invoice) be listed separately on the entry or entry summary form, when multiple dates of exportation are involved?

Facts.—Steel, intended for delivery to the United States, is frequently exported from one country over a period of time, and consolidated in a second country, where it is placed aboard an ocean vessel for shipment to the United States. Each consolidated shipment is covered by one or more special summary steel invoices. Currently, a Customs office requires that bundles with different dates of exportation be separately identified and listed on the entry or entry summary.

Law and analysis.—General statistical headnote 1(a)(viii), Tariff Schedules of the United States, requires that the entry or withdrawal form must give the date of exportation. Section 141.61(e)(1), Customs Regulations, provides that for each class of merchandise within each

invoice, information required by the general statistical headnotes must be shown on the entry and withdrawal forms. Section 141.61(a) of the regulations requires that all information be clearly set forth on the entry papers.

Holding.—The cited provisions of law and regulation provide a district director with the authority to require that merchandise listed on a single invoice be separately identified and listed on entry, or entry summary form.

(C.S.D. 80-52)

Marking: Country-of-Origin Marking of Bookmatches

Date: July 23, 1979
File: MAR 2-05-R:E:E
710247 DB

This ruling concerns the country-of-orign marking on bookmatches made in Canada.

Issues.—(1) May the abbreviation "Can." or "Cana." be used to indicate Canada as the country of origin for purposes of 19 U.S.C. 1304?

(2) In the case of bookmatches is marking behind the matches, referred to as the comb, sufficiently conspicuous?

Facts.—An importer proposes to import bookmatches from Canada. The bookmatches will be marked to indicate Canada as the country of origin. The importer would like to abbreviate Canada to "Can." or "Cana." to indicate the country of origin which he believes in no way would be misleading as to the country of origin to the ultimate purchaser.

Law and analyses.—Section 304, Tariff Act of 1930, as amended (19 U.S.C. 1304) provides in general that all articles of foreign origin imported into the United States shall be legibly and conspicuously marked to indicate the English name of the country of origin to an ultimate purchaser in the United States. The Customs Service has held that the ultimate purchaser of bookmatches is the ultimate recipient.

As a general rule, abbreviations are not acceptable unless they clearly indicate the country of origin (19 CFR 134.45(b)).

Holding.—Customs is of the opinion that the abbreviation "Can." or "Cana." is not an acceptable marking for goods from Canada. The abbreviation "Can." was held unacceptable in abstract No. 15145, 6 CCR 498 (1941), and the Customs Service remains of the view that it is unacceptable.

The location of the country-of-origin marking behind the comb of matches is not considered to be conspicuous, as it is not readily visible to an ultimate purchaser. Marking on the outside of the cover in a legible and conspicuous manner would be acceptable.

(C.S.D. 80-53)

Country-of-Origin Marking: Watch Dials Designed To Be Blank

Date: July 24, 1979
File: MAR-2-05-R:E:E
710382 HS

This ruling concerns country-of-origin marking for watch dials.

Issue.—(1) Whether a watch dial may be excepted from the specific marking requirements set forth in the Tariff Schedules of the United States when the dial of the watch is to be completely blank according to the design concept.

(2) Whether it is permitted to use the words "temperature adjusted" instead of the word "unadjusted" on watch movements.

Facts.—A foreign company manufactures watches which will, according to the design concept, have a blank dial; only the hands of the watch will appear on the dial. The blank dial is an integral part of the design concept. The artist has not placed any decoration or ornamentation on the watch and will not permit the name of the country of manufacture to be placed on the face of the dial. The company wishes to mark the name of the country of manufacture of the dial on the back of the dial.

The company is also interested in marking the watch movements of the watch with the words "temperature adjusted."

Law and analysis.—(1) Schedule 7, part 2, subpart E, headnote 4, Tariff Schedules of the United States (1978) sets forth special marking requirements for watches. According to these requirements, dials are to be marked to show the name of the country of manufacture. If the imported dial is attached to any of the other articles provided for in this part of the Tariff Schedules, the marking is required to be placed on the face of the dial in such a manner as not to be obscured by any part of the watchcase.

The special marking requirements for watches are strictly construed. No dial provided for in schedule 7, part 2E, Tariff Schedules of the United States, shall be released for consumption until marked in exact compliance with the requirements of headnote 4 of that subpart.

In the present instance, a complete watch will be imported and the special marking requirements clearly require that the dial of the watch

be marked with its country of origin on it face. Accordingly, the watch in question will not be permitted entry into the country with a marking which shows the name of the country of manufacture on the back of the dial.

(2) The special marking requirements of schedule 7, Tariff Schedules of the United States also require that watch movements be marked on one or more of the bridges or top plates to show in Arabic numerals and in words, the number and classes of adjustments, or if unadjusted, the word "unadjusted." Again, the special marking requirements are strictly construed. Accordingly, under the special marking requirements it is not permitted to use the words "temperature adjusted" instead of the word "unadjusted." Terminology other than "unadjusted" would be misleading to the ultimate purchaser.

Holding.—The special marking requirements set forth in schedule 7, part 2, subpart E, headnote 4, Tariff Schedules of the United States are strictly construed. Accordingly, a watch dial may not be excepted from the marking requirements because the design concept is for the watch dial to be blank, and the terminology "temperature adjusted" may not appear on the watch movements instead of the word "unadjusted."

(C.S.D. 80-54)

Bonds: Use of General Term Bond by Broker Importing for Own Account

Date: July 25, 1979
File: BON-1-R:CD:D
210738 MR

Issue.—May an importer who is also licensed as a customhouse broker use a general term bond, Customs form 7595, for importations for which he is the importer of record.

Facts.—A firm acts as an importer of steel. The firm is also licensed as a customhouse broker in two ports. The firm wishes to execute a general term bond, Customs form 7595, to cover those importations for which it is the importer of record. The firm will not be acting as a broker for these particular entries and it intends to hire a broker in those ports where entries are made.

Law and analysis.—Customhouse brokers are normally not permitted to use general term bonds because of the possibility of unforeseeable cumulative liability under these bonds. Since the scale of importations by a broker varies with the broker's clients, it is more difficult to

predict, on the basis of past importations, future bond liability of a broker, than it is for an importer who imports for his own account.

These considerations, however, do not hold when a customhouse broker wishes to use a general term bond to cover importations made for its own account. As long as the broker does not use the general term bond for importations for the account of another, then the broker is in the same position as any other importer who wishes to use a general term bond with respect to the problem of unforeseeable cumulative liability. Therefore, the broker should be allowed to use a general term bond to cover importations made for its own account.

Holding.—A broker may execute a general term bond, Customs form 7595, so long as its use is restricted to goods imported for its own account. The bond may not be used by the broker for goods imported for the account of another in these ports where the broker is licensed to operate.

(C.S.D. 80-55)

Vessel Entrance: Whether Foreign-Flag Fishing Vessels Have "Arrived in Distress" When Foreign Countries Have Refused Them Permission To Land Their Catch

Date: July 26, 1979
File: VES-7-03-R:CD:C
104118 MKT

This ruling concerns whether two foreign-flag fishing vessels arrive in distress and may unlade their catch pursuant to section 4.96(g), Customs Regulations (19 CFR 4.96(g)).

Issues.—(1) Whether two foreign-flag fishing vessels "arrive in distress" for the purposes of section 4.96(g), Customs Regulations, when they have been denied permission to land their catch by several foreign countries and when once in a United States port they become subject to conflicting claims of ownership, lose one master, are kept in port by an uncontrollable crew, and are unable to purchase bunker fuel.

(2) Whether the vessels described above, by the exercise of due diligence, may transport their catch to a foreign port without spoilage.

Facts.—Two fishing vessels formerly owned and operated by Nicaraguan interests transferred their flags to the Cayman Islands. During the week of July 15, 1979, these vessels arrived in the port of Los Angeles, Calif., to land their catch taken aboard on the high seas. The vessels seek to unload in the United States because Mexico, Nicaragua, Panama, and Costa Rica have refused the vessels permission

to unload. The inquirer states that the vessels will not attempt to depart or transship their catch on the high seas because:

1. The Sandinist forces or a local group of anti-Somoza demonstrators took physical charge of the vessel, claiming ownership.

2. Members of the crew refused to move the ship because they have not been paid for the fish they caught.

3. The master (a Peruvian) of one of the vessels has left the ship and returned to his home in Peru.

4. It is not known how much fuel is aboard the vessel and for how long a period the auxiliaries will be maintained to protect the fish that is highly perishable.

5. The only control over the crew is through the U.S. master who is aboard one of the vessels.

6. No fuel is available for purchase due to the shortage and no one (Star-Kist Foods) will guarantee payment.

7. You feel very strongly that the crew, made up of U.S. citizens, Peruvians, Nicaraguans, and other nationalties are likely to become overzealous and cause a serious international incident. These fears relate to the crew as well as the vessels.

You contend that these circumstances constitute a serious distress situation. You state that you have advanced considerable sums for the expenses of the vessels and you will suffer a large economic loss if the vessels are not permitted to unload. You further state that you will still suffer a significant loss even if the vessels are permitted to unload in the United States. You express doubt that the crew will remain on board the vessels once they are unloaded and that this will further aggravate the situation.

Law and analysis.—(1) Title 46, United States Code, section 251, prohibits, except as otherwise provided by treaty or convention, a foreign-flag vessel from landing in a port of the United States its catch of fish taken on board the vessel on the high seas.

However, section 4.96(g), Customs Regulations (19 CFR 4.96(g)), permits a nonconvention fishing vessel which arrives in distress to secure supplies, equipment, or repairs, but prohibits the vessel from landing its catch of fish unless the vessel's master, or other authorized representative of the owner, shows to the satisfaction of the District Director that it will not be possible, by the exercise of due diligence, for the vessel to transport its catch to a foreign port without spoilage.

When the arrival of a vessel in distress is not apparent, the Customs Service has previously relied upon a verification by the U.S. Coast Guard that the vessel has indeed arrived in distress. The Coast Guard limits this determination to whether the arrival is a result of a force majeure (33 CFR 124.10(a)(3), 124.10(b)(6), 124.14(d)). We have

contacted the Captain of the Port of Los Angeles, U.S. Coast Guard, who has stated that these vessels did not "arrive in distress."

The fifth circuit has found that in the ordinary meaning of the phrase:

> A vessel is in distress when in a state of danger or necessity, "as from want of provisions or water," etc. (Websters Dictionary); or "in a situation of misfortune or calamity, as a steamer in distress" (Standard Dictionary). A vessel, of course, is also in distress when wrecked, and needing salvage service; * * * . *The Saehelm*, 99 F. 456, 458 (5th Cir. 1900).

Examining the facts at hand, we find that the vessels in this case did not arrive in distress. The vessels had been denied the right to unlade their catch by several foreign countries but not the right to enter their ports to secure any necessary supplies, equipment, or repairs. Furthermore, there is no indication that the vessels arrived in the United States in an unseaworthy condition or in need of any supplies, equipment, or repairs. However, once in port, the vessels became subject to conflicting claims of ownership and control of the crew was lost. The distress situation is one of economic hardship to the owners of the catch and the vessels rather than of any peril to the vessel or crew which would constitute distress for the purposes of section 4.96(g).

Further, the inquirer does not allege that it is the master or authorized agent of the owner, the appropriate party to request the landing of the catch. The inquirer alleges no interest in the vessel and is concerned only with its right to the catch. The fact that Sandinist forces or a local group of demonstrators took physical charge of the vessel, claiming ownership, indicates that the actual ownership of the vessel is in dispute.

(2) Since we do not consider the vessels to have arrived in distress, we do not need to decide whether or not, by due diligence, the catch could be transported to a foreign port without spoilage.

Holding.—(1) Two foreign-flag fishing vessels do not arrive in distress for the purposes of section 4.96(g), Customs Regulations, when they have been denied permission to land their catch by several foreign countries and when once in a U.S. port they become subject to conflicting claims of ownership, lose one master, are kept in port by an uncontrollable crew, and are unable to purchase bunker fuel.

(2) Since we do not consider the vessels to have arrived in distress, we do not need to decide whether or not, by the exercise of due diligence, the catch could be transported to a foreign port without spoilage.

Effect on other rulings.—None.

320-978 O - 80 - 4

(C.S.D. 80-56)

Entry: Maintenance of Import Records by Importer

Date: July 26, 1979
File: BRO-1-01-R:E:E
710625 M

This ruling involves a request by an international corporation for permission to maintain certain of its import records outside the United States.

Issue.—Would the retention by the importer of certain of his records outside of the United States comply with the record retention requirements of section 508, Tariff Act of 1930, as amended?

Facts.—An international corporation which has its headquarters located outside of the United States and engaged in retail merchandise in the United States, maintains certain of its import records, such as purchase orders, payment authorizations and letter of credit documentation, in its home office outside the United States. This corporation has a New York office maintained with resident personnel having full authority to order the home office to promptly forward any records maintained by the home office, pursuant to an administrative request or a summons.

Law and analysis.—Section 104 of Public Law 95-410 added a new section to the Tariff Act of 1930 numbered section 508 (19 U.S.C. 1508) which requires any owner, importer, consignee, or agent who imports or who knowingly causes to be imported any merchandise into the Customs territory of the United States to maintain certain import records.

As pointed out in item 13 of the preamble to T.D. 79-159, Customs does not believe that maintaining records outside the United States is conducive to proper enforcement of section 508 of the Tariff Act. In order that records pertaining to the importation of merchandise may be readily available for inspection and to carry out the intent of section 508, Customs is of the opinion that records required to be maintained by section 508 must be located physically in the United States.

Holding.—Records which an importer is required to maintain pursuant to section 508 of the Tariff Act of 1930, as amended, must be located physically in the United States.

(C.S.D. 80-57)

Marking: Country-of-Origin Marking Using Words "Made In/Fait a" When the Marking Is in Close Proximity to a U.S. Place Name

Date: July 26, 1979
File: MAR-1-01 R:E:E
710530 MC

This ruling concerns country-of-origin marking of imported textile fabric garments that bear both the English and the French words "Made In/Fait a."

Issue.—Whether the marking requirements have been sufficiently complied with when the dual language designation "Made In/Fait a Hong Kong" is employed.

Facts.—Garments manufactured in Hong Kong are to be imported into both the United States and Canada. In order to permit marketing of the product in both countries, the dual language designation "Made In/Fait a Hong Kong" appears on the lower right-hand corner of the label, less than 1 inch away from the company name, which includes the word "California."

Law and analysis.—Section 134.46 of the Customs Regulations requires that if "the name of any city or locality in the United States" appears on any imported article, "there shall appear, legibly and permanently, in close proximity to such word, letters or name, and in at least a comparable size, the name of the country of origin preceded by 'Made in,' 'Product of,' or other words of similar meaning." The purpose of these requirements is to avoid the possibility of misleading the ultimate purchaser.

We are of the opinion that the words "Made In/Fait a" comply with the requirements of section 134.46. The dual designation includes the English words and thus should not be confusing to the ultimate purchaser.

Holding.—Country-of-origin markings which employ the dual language designation "Made In/Fait a" satisfy the marking requirements.

(C.S.D. 80-58)

Drawback: Manufacture or Production Defined; 19 U.S.C. 1313

Date: July 26, 1979
File: DRA-1-R:CD:D MM
210393

Issue.—Whether the insertion of sunglass lenses into eyeglass frames constitutes a manufacture or production for drawback purposes under 19 U.S.C. 1313.

Facts.—Metal and plastic eyeglass frames of various styles are imported in bulk. Sunglass lenses of American manufacture are inserted into the frames after an edging process of deburring and placing a ridge on the lens edge. Insertion of the lens into the plastic frames is accomplished by physically forcing the lens into the frame. In the case of the metal frames, a small setscrew is loosened, the lens inserted, and the screw retightened. The completed sunglasses are then cleaned, packed, and exported.

Law and analysis.—Title 19, United States Code, section 1313, the drawback law, provides for the allowance of drawback upon the exportation of articles which have been maufactured or produced in the United States with the use of imported or substituted merchandise of the same kind and quality.

Manufacture or production has been defined as a process which changes or transforms an article into a new and different article having a distinctive name, character or use. The requirements that a manufactured article have a different character or use are satisfied when an imported article which is not suited for commercial use is further manufactured into one that is suited for commercial use. In this case, the frames are not suited for commercial use when imported whereas the sunglasses are so suited when exported.

Holding.—The insertion of lenses into metal and plastic frames constitutes a manufacture or production and drawback is payable under 19 U.S.C. 1313 upon compliance with the applicable laws and regulations.

(C.S.D. 80-59)

Country-of-Origin Marking: Traveler's Checks

Date: July 26, 1979
File: MAR-2-05-R:E:E
710855 MC

This ruling concerns the marking of traveler's checks.

Issue.—Whether traveler's checks are considered articles within the meaning of the Tariff Act of 1930 (19 U.S.C. 1304), and are accordingly subject to country-of-origin marking requirements.

Facts.—Traveler's checks, printed in Canada, are planned to be imported into the United States. Each check is to be preprinted with the bank name, the signature of an officer, and the designated dollar value. The traveler's checks are to be sold to the public in booklets containing a plurality of checks. A ruling is sought to resolve whether words such as "Printed in Canada" are required to appear on the checks.

Law and analysis.—Section 304 of the Tariff Act of 1930, as amended (19 U.S.C. 1304), requires that "except as hereinafter provided, every article of foreign origin * * * imported into the United States shall be marked * * * to indicate to an ultimate purchaser in the United States the English name of the country of origin of the article." Sections 134.31 through 134.36 of the Customs Regulations provide exceptions to marking requirements.

In addition to the exceptions listed in the above quoted regulations, several other items have been held not to be articles within the meaning of 19 U.S.C. 1304 and thus not subject to the marking requirements. Money is a chief example of such an item. Coins and currency have not been considered to be included in the kinds of articles within the statutory purview of section 1304. They have been referred to as intangibles or instruments of commerce, distinguishable from goods, wares, and merchandise which are articles subject to the marking requirements.

We are of the opinion that travelers checks are comparable to currency and are not articles within the meaning and intent of section 1304. Travelers checks have been classified in T.D. 78–368 as intangibles or evidences of value. Similar to currency, travelers checks evidence a legally enforceable right to specific value. As such they can be easily distinguished from the merchantable commodities considered articles. Travelers checks represent monetary value, yet unlike articles they have no inherent value themselves.

Holding.—Travelers checks are not articles within the meaning of 19 U.S.C. 1304. Therefore, they are not subject to country-of-origin marking requirements.

(C.S.D. 80–60)

Aircraft: Foreign Clearance; Scheduled versus Non-Scheduled Flights

Date: July 26, 1979
File: AIR–4–02–R:CD:C
104050 DR

This ruling concerns the Customs procedures to be followed where a scheduled aircraft departs from a U.S. port for a foreign port via another U.S. port.

Issue.—Whether an aircraft of a scheduled airline departing from the U.S. port of origin of a flight for a foreign port via another U.S. port with passengers for the foreign port is required to obtain clearance at the port of origin of the flight.

Facts.—Aircraft depart on scheduled flights from Anchorage, Alaska, to Whitehorse, Yukon Territory, via Fairbanks, Alaska. The District Director at Anchorage asks whether clearance from

Anchorage for Whitehorse is required in view of a ruling from the region that in the case of a nonscheduled flight, a permit to proceed is required. The region indicates that, pursuant to sections 6.3, 6.5, and 6.8 of the Customs Regulations, a clearance would be required in the case of a scheduled flight.

Law and analysis.—Section 6.5(a) of the Customs Regulations provides, with respect to the circumstances involved in the inquiry, that an aircraft operated by a scheduled airline departing for a foreign place must obtain clearance if the aircraft is beginning the flight in that area (State). Subsection (c) requires that the clearance be obtained at the Customs port of entry at or nearest each place at which passengers or merchandise are taken on board for discharge beyond the area, such clearance to be limited to the passengers and merchandise taken aboard at that place.

Holding.—Where an aircraft begins a scheduled flight at Anchorage, Alaska, for Whitehorse, Yukon Territory, via Fairbanks, Alaska, section 6.5 of the Customs Regulations requires the aircraft to obtain at Anchorage a clearance for Whitehorse for any passengers or merchandise laden at Anchorage for Whitehorse. The aircraft will similarly obtain at Fairbanks a clearance for Whitehorse for any passengers or merchandise laden at Fairbanks.

(C.S.D. 80–61)

Carrier Control: Whether a Foreign-Flag Vessel May Engage in Salvage and Removal of Drilling Rig Located Above the Outer Continental Shelf

Date: July 27, 1979
File: VES–5–13/VES–10–01
VES–10–02–R:CD:C
104099 JL

Reurtel, July 5, 1979, use of foreign-flag vessel in salvage operations and removal of drilling rig (name) located on Outer Continental Shelf (OCS) off Louisiana coast prohibited by 46 U.S.C. 316(d). See T.D. 54281(1).

(C.S.D. 80–62)

Duty Assessment: When an IIT Container is Entitled to Duty-Free Entry

Date: July 27, 1979
File: BOR–7–07–R:CD:C
104011 JM

This ruling concerns the duty-free entry into the United States of certain containers.

Issues.—(1) Are containers, qualified as instruments of international traffic (IIT) under the Customs Convention on Containers, 1972, generally entitled to entry fee of duty upon arrival in the United States?

(2) Are certain containers, manufactured in Canada and sold to a U.S.-based leasing company, to be leased for use in both domestic and international traffic, entitled to free entry as IIT when being entered through Customs?

Facts.—A Canadian company manufactures containers to be used on freighter versions of aircraft. This manufacturer sells containers to an international container leasing company, headquartered in the United States, which in turn plans to lease the containers to airlines for use in both international and domestic traffic. The United States purchaser of the containers has asked the manufacturer to domesticate the containers, i.e., pay duty on the containers, in order that the containers may be used for domestic traffic within the United States. The Canadian company believes the containers are entitled to free entry as IIT and a ruling on the matter has been requested.

Law and analysis.—The Customs Convention on Containers, 1956 (T.D. 69–68), to which the United States subscribed in 1968, provides in chapter II, article 2, for the temporary admission of containers free of duties "when they are imported loaded to be reexported either empty or loaded, or imported empty to be reexported loaded." Article 2 also provides in part:

> Each contracting party shall retain the right to withhold these facilities in the case of containers which are imported on purchase or otherwise taken into effective possession and control by a person resident or established in its territory.

Chapter II, article 6, of this convention states:

> The procedure for the temporary admission of containers and component parts free of import duties and import taxes shall be governed by the regulations in force in the territory of each contracting party

The Customs Convention on Containers, 1972, which when effective will replace the 1956 convention and which was ratified by the Senate on September 15, 1976, is not yet in force pending enactment of implementing legislation. While it would be premature to comment on the 1972 convention prior to its becoming effective, the 1972 convention does contain limiting provisions similar to those in the 1956 convention.

Under the circumstances, and as provided by the Customs Convention on Containers, 1959, we must look to the laws and regulations of the United States to determine whether containers, qualified as IIT, are generally entitled to entry free of duty upon arrival in the United States.

Section 322(a), Tariff Act of 1930, as amended (19 U.S.C. 1322(a)), provides that vehicles and other IIT shall be accorded the customary exceptions from the Customs laws to the extent and under such terms as the Secretary of the Treasury may prescribe, Senate Report 632, 83d Congress (1953) states that section 322 was added to grant to international traffic generally recognized customary exceptions from Customs requirements, but not to change the existing customary exceptions set out in the document, *United States Import Duties*, 1952 (p. 269). These exceptions are reflected in part by sections 10.41, 10.41a, and 10.41b, Customs Regulations (19 CFR 10.41, 10.41a, and 10.41b).

To qualify as an IIT within the meaning of 19 U.S.C. 1322(a), an article must be used as a container or holder, must be substantial, must be capable of repeated use and must be used in significant numbers in international traffic. The requirements are in agreement with the definition of container as set out in chapter I, article 1, Customs Convention on Containers, 1959, the pertinent portion of which appears as footnote 38a to section 10.41a, Customs Regulations.

Under section 10.41a, Customs Regulations, a container generally is considered to be engaged in international traffic when it arrives in the United States with cargo for delivery in the United States or arrives empty to lade cargo for foreign destinations. A container engaged in international traffic may be admitted without entry or payment of duty upon compliance with section 10.41a, Customs Regulations, but becomes subject to treatment as imported merchandise requiring the filing of a regular Customs entry and payment of applicable duties if withdrawn from international traffic.

Holding.—(1) Under the Customs Convention on Containers and the laws and regulations now in effect in the United States, a container otherwise qualified as an IIT may be released without entry or payment of duty only when arriving in the United States with cargo for delivery in the United States or empty to lade cargo for foreign destinations.

(2) The containers in the subject case, purchased by a U.S.-based leasing company, are arriving as imported merchandise rather than as containers in use in international traffic and as such are subject to Customs entry and payment of any applicable duty.

(C.S.D. 80-63)

Drawback: Obligation To Keep Required Records; Section 22.4(g), Customs Regulations

Date: July 27, 1979
File: DRA-1-09-R:CD:D B
210506

Issue.—This is an appeal from the denial of drawback. No clear legal issue is presented, since, in effect, the inquirer is requesting Customs to waive the requirements of the drawback law and regulations, an action which Customs has no authority to do. However, there is possibly a solution to the inquirer's problem.

Facts.—The inquirer is a shipbuilding company which built two oceangoing tugs for a foreign account, using materials and equipment supplied by the foreign account. The inquirer has a drawback contract approved under section 1313(g), title 19, United States Code.

The inquirer stated in its drawback proposal (also known as a drawback statement) that "Withdrawal dates will be recorded in the same manner as the receiving date." Because the inquirer did not keep the records as it had stated in its drawback proposal, drawback was denied. The inquirer appealed the denial.

There are other records referred to in the case history which indicate that the inquirer might be able to establish the basis for drawback under a revised drawback proposal.

Law and analysis.—Section 1313(g) provides for a refund of duties, less 1 percent, paid on imported materials used in the construction and equipment of vessels built for foreign account and ownership, notwithstanding such vessels may not be exported within the strict meaning of that term.

Section 22.4, Customs Regulations, sets forth the records which each manufacturer or producer will keep as to all articles manufactured or produced for exportation with drawback. Section 22.4(g), Customs Regulations, specifically provides that the builder of a vessel shall keep records provided for in section 22.4, Customs Regulations, so far as applicable, and shall file an abstract of such records with the appropriate district director in ample time prior to exportation of the vessel to enable Customs to verify these records by examination of the vessel.

Customs Service approval of a manufacturer's proposal establishes that manufacturer's entitlement to payment of drawback. When approved, the manufacturer's proposal is a contract between the manufacturer and the Customs Service. A manufacturer who complies

320-978 O - 80 - 5

with the contract terms can conduct its business operations with assurance that it will receive payment of drawback.

Conversely, a manufacturer, as in the case of this inquirer, who fails to comply with the very terms it proposed, forfeits the advantage offered by a drawback contract. A manufacturer who fails to satisfy the terms of its own drawback contract cannot demand or expect payment.

The Customs Service cannot, of course, waive the requirements of the drawback law or regulations. However, if a manufacturer makes another proposal which is in accord with the law and regulations and which it can fulfill, Customs will accept the new proposal and enter into a new drawback contract with that manufacturer.

Basically, the drawback law and regulations require in 1313(g) cases that the identity of the imported material used be maintained from the time it is imported until it leaves the country as part of a completed vessel. The exact date of use in the construction of the vessel is not required. Thus, records to show that imported steel was used to construct a vessel between January 1 and May 31, 1976, would usually be sufficient. It would not be necessary to prove, for example, that one piece of steel was used on January 10, another on January 15, etc.

Holding.—Since there seems to be no dispute that the claimant did not submit the records required by the law, the regulations, and its contract, the Regional Commissioner acted correctly in denying drawback.

Possible alternatives.—Supplementary business records maintained, for example, by a representative of the purchaser of the vessels, who is stationed during the construction period at the manufacturer's shipyard, may be adopted by the manufacturer as his own records, assuming they were prepared concurrently with the building of the vessels and were maintained in accordance with general business recordkeeping practice.

However, it is not clear whether the inquirer can prepare a new drawback proposal with the use of adopted records, which would comply with the requirements of the drawback law and regulations. A new proposal showing that the inquirer complied with the recordkeeping requirements of the drawback law and regulations would be considered by the Customs Service.

(C.S.D. 80-64)

Manipulation in Bonded Warehouses: Cutting Woolen Neckwear Into Scrap

Date: July 27, 1979
File: WAR-3-R:CD:D JB
210748

Issue.—Whether the cutting of woolen neckwear stored in a bonded warehouse so as to render the goods into scrap or rags constitutes a manipulation within the contemplation of section 562, Tariff Act of 1930, as amended (19 U.S.C. 1562).

Facts.—The importer has stored in a Customs bonded warehouse a shipment of woolen neckwear, entered into the warehouse on July 1, 1958. The entry has been properly extended until September 13, 1979. The importer now wishes to open the cartons containing the goods, in the warehouse, and cut each item of neckwear, reducing the entire shipment to rags. It is requested that this procedure be permitted as a manipulation.

Law and analysis.—19 U.S.C. 1562 provides in relevant part:

> That upon permission therefor being granted by the Secretary of the Treasury, and under Customs supervision, at the expense of the proprietor, merchandise may be cleaned, sorted, repacked, or otherwise changed in condition, but not manufactured, in bonded warehouses * * *.

The question of what constitutes a manipulation and what a manufacture is, is thus, of considerable importance. The Supreme Court has stated the following:

> Manufacture implies a change, but every change is not a manufacture. * * * There must be a transformation; a new and different article must emerge, "having a distinctive name, character, or use." *Anheuser-Busch Brewing Association* v. *U.S.*, 207 US 556 (1908), at 562.

Under this definition the proposed operation might seem a manufacture, a distinctive name and use arguably having emerged. Nonetheless the Customs Service has taken the position that procedures such as here contemplated are manipulations, rather than manufactures.

In a Bureau letter of April 29, 1970, the opinion was expressed that the reduction to scrap of 4,178 textile looms in a bonded warehouse was a manipulation. The dismantling of trucks has been similarly approved (B/L, Feb. 16, 1978). Further, Customs Regulations provide that:

> Manipulation resulting in a change in condition of the merchandise, which will make it subject to a lower rate of duty or free of duty upon withdrawal for consumption, is not precluded by the provisions of such Section 562" (19 CFR 19.11(d)).

Thus, the intent of the importer to avoid payment of the higher rate of duty that would apply to his goods as neckwear, as opposed to woolen rags, is not a factor.

In light of the foregoing considerations it seems that the procedure suggested by the importer here should be permitted under section 562 (19 U.S.C. 1562) as a change in condition manipulation.

Holding.—Woolen neckwear stored in a bonded warehouse may be cut in the warehouse so as to render the goods into scrap or rags as a manipulation under section 562, Tariff Act of 1930, as amended (19 U.S.C. 1562).

(C.S.D. 80–65)

Prohibited and Restricted Importations: Whether a Mark Appearing on Imported Sportswear Is Confusingly Similar to a Registered Trademark

Date: July 30, 1979
File: TMK-3-R:E:E
710634 MC

This ruling concerns the applicability of the prohibition set forth in section 526 of the Tariff Act of 1930, as amended (19 U.S.C. 1526), against the importation of merchandise bearing resemblance to a registered trademark.

Issue.—Whether the mark appearing on the importer's sportswear is confusingly similar to a registered trademark such that importation of that sportswear would infringe upon the rights of the trademark owner.

Facts.—Customs is investigating whether a demand for redelivery of a shipment of sportswear should be issued. The merchandise in question includes tennis shorts, warmup jackets and tennis shirts, each bearing a mark resembling the letters "Ti." The figure appears as a blue vertical line on the left connected at the top to a blue horizontal line which extends over a vertical red line on the right. This Ti-shaped figure is placed in the white background of a blue square.

The trademark also consists of blue and red lines in a blue bordered box with white background, but in the shape of the letter "F." A horizontal red line is placed at the top of the box under which a horizontal blue line appears, connected at the far left by a vertical blue line which extends down. Color photographs of both marks and a

sample tennis shirt from the allegedly infringing merchandise were submitted for examination.

Law and analysis.—Section 526 of the Tariff Act of 1930, as amended (19 U.S.C. 1526) and part 133, subpart A, of the Customs Regulations (19 CFR 133.1–133.7) provide for the recordation of trademarks with Customs for import protection. Section 133.21 of the Customs Regulations provides, in part, that:

> Articles of foreign or domestic manufacture bearing a mark or name copying or simulating a recorded trademark or trade name shall be denied entry and are subject to forfeiture as prohibited importations.

Infringement of federally registered marks is governed by the test of whether importer's use is likely to cause confusion, or to cause mistake, or to deceive. When comparing different marks to determine whether they are confusingly similar, it is important to consider the impression which the mark as a whole creates on the average reasonably prudent purchaser.

While the mark in question here is similar to the protected mark in that they are both red and blue lines in the white background of blue bordered boxes, the color and boxing are to be disregarded as factors, as they do not appear in the trademark registration. The impression created by color and boxing, while possibly confusing to the consumer, is to be given no weight in the instant analysis. Excluding these factors, we are of the opinion that the reasonably purdent purchaser of sportswear, upon viewing the merchandise in question would not be confused, in all likelihood, as to the source, connection, or sponsorship of the clothing being purchased. The submitted Ti-shaped figure bears little resemblance to the F trademark.

Holding.—Demand for redelivery should not be issued as the merchandise does not infringe within the meaning of 19 U.S.C. 1526. We are of the opinion that there would be little likelihood of confusion in this case. You may furnish both parties with a copy of this decision.

(C.S.D. 80–66)

Brokers: May a Third Party Maintain the Importer's Records Required To Be Kept by Public Law 95–410?

Date: July 30, 1979
File: BRO-1-01 R:E:E
710602 M

This ruling pertains to the eligibility of third parties to retain importer's records.

Issue.—May a third party maintain, on behalf of the importer, the importer's records required to be kept by Public Law 95–410?

Facts.—An importer proposes to enter into a contract with another party for the latter, on behalf of the importer, to maintain the importer's records required to be kept by Public Law 95–410.

Law and analysis.—Sections 104 and 105 of Public Law 95–410, among other things, added new sections to the Tariff Act numbered respectively sections 508 and 509 which pertain to recordkeeping requirements. Section 508, Tariff Act of 1930, as amended (19 U.S.C. 1508) provides that any owner, importer, consignee or agent who imports or who knowingly causes to be imported any merchandise into the Customs territory of the United States must maintain certain records. Subsection (c) of section 509 of the Tariff Act of 1930, as amended (19 U.S.C. 1509(c)), in effect, provides among other things, for the summons of records (defined as statements, declarations, and documents required to be kept under sec. 508) maintained by a third party recordkeeper (who is defined as a customhouse broker, attorney, or accountant). Section 162.1a of the Customs Regulations (T.D. 79–159) sets forth a similar definition for a third party recordkeeper.

Therefore, if the third party is either a customhouse broker, attorney, or accountant, he may maintain, on behalf of the importer, the importer's records required to be kept by Public Law 95–410.

Holding.—A third party may maintain, on behalf of the importer, the importer's records required to be kept by Public Law 95–410, provided the third party is either a customhouse broker, an attorney, or an accountant.

(C.S.D. 80–67)

Drawback: Destruction of Foreign Trade Zone Restricted Merchandise for Drawback Purposes

Date: July 31, 1979
File: DRA-1-R:CD:D
210735 MR

Issue.—Whether a process which results in the creation of valuable scrap satisfies the requirement of destruction of zone restricted merchandise under section 3 of the Foreign Trade Zones Act (19 U.S.C. sec. 81c)?

Facts.—A firm imports semiconductor devices into the United States. It tests the devices and those which are found to be substandard or defective are sent to a foreign trade zone under zone restricted status so that they may be considered exported for the purposes of drawback.

Drawback is claimed under section 313(c) of the Tariff Act of 1930 (19 U.S.C. sec. 1313(c)). The rejected semiconductor devices are put through a process of destruction which leaves a valuable waste, gold scrap, as a residue. The firm wishes to enter this residue into the Customs territory from the foreign trade zone in order to recover the gold from the scrap.

Law and analysis.—According to section 3 of the Foreign Trade Zones Act, as amended (19 U.S.C. section 81c):

> * * * under the rules and regulations of the controlling Federal agencies, articles which have been taken into a zone from customs territory for the sole purpose of exportation, destruction (except destruction of distilled spirits, wines, and fermented malt liquors), or storage shall be considered to be exported for the purpose of—
>
> (a) the drawback, warehousing, and bonding, or any other provisions of the Tariff Act of 1930, as amended, and the regulations thereunder * * *.

It is claimed that the crushing of the semiconductors is a destruction under 19 U.S.C. section 81c even though valuable gold scrap remains (by valuable it is meant that it is economically feasible to recover the gold in the scrap).

The law does not define what is meant by destruction. The term, however, is used often in Customs law. Section 557(c) of the Tariff Act of 1930 (19 U.S.C. sec. 1557(c)), for example, states that:

> Merchandise entered under bond under any provision of law, may * * * be destroyed * * * within the bonded period under Customs supervision, in lieu of exportation * * *.

The question, then, arises often and in many contexts as to what is a destruction for the purposes of Customs laws and regulations. The problem is that there are varying degrees of destruction possible. A particular article may be destroyed so that it is no longer considered to be the same article but rather a different article. Or it may be destroyed so that it is no longer a recognizable article but rather valuable scrap or waste. Or it may be destroyed so that it has no economic value left at all, that is, it is not economically feasible to salvage anything from the scrap. There is, therefore, wide latitude available in defining the term "destruction."

A question closely related to this is whether destruction may be combined with exportation and storage under 19 U.S.C. section 81c or whether there must be destruction or exportation or storage but not more than one of these. If the latter view is taken, then the definition of destruction must be as strict as possible, that is, destruction should mean "destruction as an article of commerce." *American Gas Accumulator Co.* v. *U.S.*, T.D. 43642 (Cust. Ct. 1929). However, this

view cannot be accepted. The articles must be brought into the zone for the sole purpose of exportation, destruction, or storage. Each of these three alternatives is set on an equal footing. If a choice had to be made of one of the three alternatives, thereby precluding any use of the other two, this would create some untenable situations. For example, if an article were brought to the zone for storage, under this interpretation it would have to remain there forever, it could never be destroyed or exported. In fact, any merchandise brought into a zone must be stored there at least for a short time; Congress did not intend to preclude exportation or destruction simply because the articles were also stored for a time in the zone. Storage, therefore, must be considered a complement to rather than a mutually exclusive alternative to exportation and destruction. However, the law treats storage, exportation and destruction equally so that they are all complementary rather than mutually exclusive alternatives. Thus, any combination of exportation, destruction, and storage zone restricted merchandise is permitted under 19 U.S.C. section 81c.

This conclusion fits in with the general practice in other contexts where destruction is one alternative provided by the law.

In the case of a bonded warehouse, the merchandise must be exported, destroyed, or withdrawn for consumption within the bonded period. It is common practice to allow a partial destruction of the merchandise as long as any valuable scrap is then exported or withdrawn for consumption. The bond is satisfied as long as there is no valuable residue remaining in the bonded warehouse from the original merchandise. Thus, a process of destruction in a bonded warehouse need not entail destruction as an article of commerce.

In the case of a temporary importation under bond, the merchandise must be exported or destroyed within the bonded period. This means that there may be no valuable residue from the merchandise left in the Customs territory at the end of the bonded period. The merchandise may undergo a process of partial destruction as long as any valuable waste is then destroyed as an article of commerce or exported. This is essentially the holding of *American Gas Accumulator, supra.*

In a foreign trade zone, zone restricted merchandise may only be stored, destroyed, or exported. According to Webster's New World Dictionary, "destroy implies a tearing down or bringing to an end by wrecking, ruining, killing, eradicating, etc. * * *." Any such process should be considered one of destruction for the purpose of the Foreign Trade Zones Act. The crushing of semiconductors would be considered a process of destruction, even though at the end of this process the scrap still has some economic value. That scrap remains zone restricted so that it may be stored, exported, or further destroyed in the zone. Nothing else may be done to the scrap in the zone. For

example, the scrap may not undergo a process of recovering the gold from the scrap since this is not a process of destruction.

If the scrap is being stored in the zone under zone restricted status, according to 19 U.S.C. section 81c it may come back into Customs territory only if "the Foreign-Trade Zones Board deems such return to be in the public interest * * *." Such return would not have any effect on the drawback paid since the merchandise is considered exported for the purpose of drawback once it is sent to the zone for exportation, destruction, or storage. Any duty applicable to the returned scrap would have to be assessed at time of entry into Customs territory.

Holding.—The crushing of semiconductors in a foreign trade zone is a destruction for the purposes of 19 U.S.C. section 81c even though valuable gold scrap remains. The scrap may be only exported, further destroyed, or stored in the foreign trade zone, under zone restricted status, unless the Foreign Trade Zones Board approves the return of the stored scrap to Customs territory. This ruling revokes T.D. 78-360.

(C.S.D. 80-68)

Drawback: Distribution of Drawback Among Products Resulting From Manipulation of Imported Merchandise

Date: July 31, 1979
File: DRA-1-09-R:CD:D
210574 B

Issue.—Assuming there is no market for a byproduct, may a cost value be assigned to that byproduct, while market values are assigned to other byproducts for which a market does exist?

Facts.—A corporation has an approved contract for drawback for a chemical. The manufacturing process which the chemical undergoes results in three primary products, of which two are sold and the remaining is used to produce five secondary products, of which two are sold and three are used as fuel or used to produce other products. There is no market for the three substances which are used as fuel or to produce other products, since there is no demand for them and if there were such a demand, shipping costs would make any sales unfeasible. Audit personnel, in verifying a claim for drawback by the corporation, have informed the claimant that relative values must be distributed based on market value; and a cost value, equal to current fuel value based on Btu's is not permitted by the regulations. The corporation states that Customs advised it verbally to use the cost value and has asked for clarification.

Law and analysis.—Section 22.20(e), Customs Regulations, provides clearly:

> The values to be used in computing the distribution of drawback where two or more products result from the manipulation of the imported merchandise pursuant to section 313(a), Tariff Act of 1930, *shall be market values* unless the special regulations under which drawback is claimed provide otherwise. [Italic added.]

In relevant part, section 313(a), Tariff Act of 1930 (19 U.S.C. 1313(a)), provides:

> * * * Where two or more products result from the manipulation of imported merchandise, the drawback shall be distributed to the several products in accordance with their relative values at the time of separation.

We are dealing here with a substance that is in fact a byproduct for which no market exists. In such instances, the relative value to be assigned is the cost of production.

The case of *Kilburn Mill* v. *United States* (2 Cust. Ct. 203, C.D. 124 (1939)), discusses the question fully. At the time this case was decided, article 1068(b) Customs Regulations required the relative values be determined on a market value basis, as does the present regulation. Three products, cotton sliver, combed noils, and card strips resulted from the primary manufacturing process. The sliver, the most valuable product and the primary purpose of the manufacturing process, had to be subjected to further processing to produce fine cotton yarn. The noils and strips were sold and exported. The court noted it was undisputed that at the point of separation, i.e. at the time when relative values are to be assigned per section 313(a) of the Tariff Act, the sliver had "no open market value and was not sold in the ordinary course of trade * * * " (2 Cust. Ct., at 205). The collector, in determining drawback, figured the total cost or producing the three products—cotton, labor, and overhead. From this total cost, he then deducted the amounts realized on the sales of the noils and strips. The remainder he considered the value of the sliver. The court held that this method was correct in that the sliver was produced on a cost basis as the desired product, and that because the noils and strips were not sought and were not produced on a cost basis, to assign that basis to these products would have no factual grounds.

> Since the sliver was produced on a cost basis and was not sold in the market * * * its only value at the time of separation was its cost, that is, the total cost of material, labor, and overhead used in producing it, less any amounts recoverable by the sale of byproducts. (2 Cust. Ct. at 206).

On appeal, that court was of the opinion that if the collector was wrong, the appellant was also erroneous by ignoring the market values

of the noils and strips and assigning assumed costs of production far exceeding their market values. (*Kilburn Mill* v. *United States*, 27 CCPA 379, C.A.D. 114 (1940).)

In effect, the court stated that when market values exist, they must be used, and if they do not exist, cost of production shall be used for comparison:

> If the evidence showed that the noils and strips had no market values, we might assume that the costs of production of the three products (assuming that the costs of production of the byproducts noils and strips could be ascertained), in the absence of market values, would fairly reflect their actual or intrinsic values, and thus their relative values might be determined by comparing their relative costs. But we are clear this may not be done where the absence of market value of only one of the products is established, for it is clear that in a case like that before us we may not assume that the costs of production of the noils and strips reflect their values for purposes of comparison or otherwise. (*Kilburn Mill*, *supra*, 27 CCPA, at 386.)

The court further pointed out (27 CCPA, at 387) that the appellant had presented no evidence to show that relative values could be determined with any greater certainty than by the method used by the collector.

Holding.—Section 22.20(e) of the regulations notwithstanding, in the absence of a market value for a byproduct the value to be used at the time of separation is its cost of production, as set out by the courts in the cited cases, unless evidence is adduced to show that relative values can be determined with a greater certainty by applying another valuation method.

(C.S.D. 80–69)

Bonds: Return of Cash Deposited in Lieu of Surety; Bonding of Imported Automobile To Insure Compliance With EPA Requirements

Date: July 31, 1979
File: BON-1-R:CD:D JB
209865

Issue.—Whether cash or Government securities deposited in lieu of surety to bond imported automobile, in order to insure compliance with Environmental Protection Agency (EPA) requirements, may be returned upon certification of compliance with EPA regulations.

Facts.—The importer purchased an automobile while on vacation in Germany and entered it at Bridgeport, Conn. As entered into the country the car did not comply with requirements of the EPA. The

vehicle was released to the importer under bond (Customs Form 7551, Immediate Delivery and Consumption Entry Bond) subject to the requirement that a conformity statement be delivered to the District Director of Customs within 90 days after entry. Failure to bring the vehicle into compliance would require its delivery to the port of entry for reexportation. The importer brought the vehicle into compliance with pollution regulations within the stipulated time period, caused a letter to be sent from EPA to the District Director of Customs in Bridgeport and then sought the return of his cash bond. He was informed by the Hartford office that Customs policy was to hold the cash bond for a period of 2 years after the final liquidation. The cash was released upon deposit of U.S. Government securities. Release of the securities is now requested.

Law and analysis.—Established Customs policy with regard to the holding of cash or government securities given in lieu of surety on entry bonds states that such deposits shall not be released until 2 years after the date of liquidation. Section 521, Tariff Act of 1930, as amended, (19 U.S.C. 1521) provides this 2-year limit as the outside time limit when charges could be found legally due, in the event of reliquidation for fraud. Insofar as the purpose of the entry bond is usually to guarantee the payment of all charges legally due this time limit is appropriate to that purpose. Where there is substantial need to safeguard the revenue owed or potentially owed to the Customs Service the guarantee of the bond, whether in cash or by surety, should be retained until its purpose is discharged.

In certain circumstances, however, the purpose of safeguarding Customs revenue has no strong relevance to the reason for bonding. Such circumstances are found with the personal importation of motor vehicles that are entered into the United States not in compliance with evironmental or safety standards. In such cases, as with the present one, the purpose of requiring a bond is to insure that the vehicle will be brought into compliance with U.S. law, or else reexported. The possibility of loss of Customs revenue in personal importations of foreign automobiles is not substantial. Therefore, upon certification from the appropriate agency to the District Director of Customs where entry was made, cash or Government securities given to bond entry of a vehicle not in compliance with environmental or safety standards should be released. As the importer here points out, refusal to release the cash bond after payment of duty and vehicular modification subjects the small importer who must deposit cash to a significant penalty in the form of lost interest. In view of the purposes of the original bonding, such a result is unnecessary.

Holding.—Cash or Government securities deposited in lieu of surety to bond personally imported automobile in order to insure

compliance with federal pollution standards, may be returned to the importer upon certification of compliance to the District Director of Customs at the port of entry, provided the Director is satisfied that all other applicable regulations and requirements have been complied with.

(C.S.D. 80-70)

Classification: Actual Use Provision; Substitution; C.S.D. 80-1 Modified

Date: June 5, 1979
File: CLA-2-R:CV:MA
057110 E

DISTRICT DIRECTOR OF CUSTOMS,
1240 E. 9th Street,
Cleveland, Ohio

SIR: On January 11, 1979, a ruling was issued holding that the actual use provisions of general interpretative rule 10(e)(ii), could not be satisfied by substitution.

The facts in that case were that unassembled internal combustion engines were withdrawn from a foreign trade zone, the various parts placed in inventory at the manufacturer's plant, and then the various parts were used in the production of engines to be installed in farm tractors, agricultural machinery, and industrial motor vehicles. It was represented that of all the parts in the inventory, approximately 50 percent were unique to farm tractors and machinery, and approximately 50 percent were parts common to all applications. Because the unique parts were associated into kits identified by a specific CKD number at the time of importation, the manufacturer would know the number of engines destined for installation in an article classifiable under item 692.30 or 666.00, TSUS, and could show proof of use by number.

The decision of January 11, 1979, concluded that because there was a commingling of the common parts prior to the production of the engines and their installation in agricultural implements there has been a substitution of parts and the requirements of general interpretative rule 10(e)(ii), Tariff Schedules of the United States (TSUS) could not be met.

The contention has now been made that there is an established and uniform practice within the meaning of section 1315(d), title 19, United States Code, to accept as compliance with general interpretative rule 10(e)(ii), importations of knocked-down engines, the components of which are placed in stock, and then like any other engine

assembly operation in the country, are assembled on a moving production line which is automated, provided the production line output records establish that the number of knocked-down engines entered under item 660.40, TSUS, have been installed in articles classifiable under item 692.30 or 666.00, TSUS. The existence of a practice to accept production line output records as proof of use has been verified. Therefore application of the ruling of January 11, 1979, would result in the importation at a higher rate of duty or charge in violation of section 1315(d).

In view of the above, records supported by proof of use certifications by the end users may be used to show proof of use for purposes of item 660.40, TSUS, in the given circumstances. This letter should not be construed as a general determination of the issue of substitution with respect to general interpretative rule 10(e)(ii). Further, this practice should be limited to engines to be installed in argicultural tractors or implements.

The ruling of January 11, 1979 (published as C.S.D. 80–1), is accordingly modified.

(C.S.D. 80–71)

Powers of Attorney: When Powers of Attorney Are Necessary in Order for a Corporate Employee To Sign Customs Forms

Date: August 8, 1979
File: ENT-1-01-R:E:E
710862 MK

Facts.—A resident corporation inquires whether it must grant a power of attorney to its employees to execute certain Customs and foreign-trade zone forms, or whether these forms need only be executed by a duly authorized employee. The company wishes to limit the number of powers of attorney it grants.

Law and analysis.—The evidence which Customs requires of an employee's authority to transact Customs business on behalf of his employer is a Customs power of attorney as described in section 141.32, Customs Regulations. Thus, a duly authorized employee is one to whom such power of attorney has been granted. Any authorization which does not conform to the authorization described in section 141.32 would not be considered to be sufficient for Customs purposes. Therefore unless, as providing in section 141.38 of the regulations, the person signing the forms on behalf of a resident corporation is known to the district director to be the president, vice president, treasurer, or secretary of the corporation, a power of attorney must be issued to

an employee signing the following forms, about which the corporation inquired:

Customs Form 7505, Duty-Paid Warehouse Withdrawal for Consumption, Customs Form 7519, Combined Rewarehouse Entry and Withdraw for Consumption, Customs Form 3311, Declaration for Free Entry of Returned American Products, and Customs Form 5119–A (which is used instead of form 7523).

The assembler's declaration, provided for in section 10.24(a)(1) of the regulations is completed by the foreign assembler. The endorsement by the importer, provided for in section 10.24(a)(2), requires a power of attorney.

An add slip to an invoice, being part of the entry package, requires a power of attorney to the person submitting it on behalf of the importer.

Since business conducted in a foreign-trade zone is under the control of the Customs Service, it is treated as Customs business for the purpose of rules governing powers of attorney. Therefore foreign-trade zone forms require the signature of persons possessing a power of attorney.

A Customs Form 7512, Transportation Entry and Manifest, may be executed by an individual who does not hold a power of attorney, in accordance with section 111.3(d) of the regulations.

Holding.—An employee of a resident corporation who is not an officer named in section 141.38 of the regulations must have a Customs power of attorney to execute Customs forms 7505, 7519, 5119–A, and 3311; foreign-trade zone forms B–F (redesignated as forms 214, 215, and 216), the importer's endorsement to assembler's declaration, and an add slip to an invoice.

No power of attorney is needed to sign a Customs form 7512.

(C.S.D. 80–72)

Bonds: Application of 19 CFR 113.14(g)(1)(ii) in Immediate Delivery Situations

Date: August 1, 1979
File: BON–1–R:CD:D MR 209667

Issue.—Under what circumstances do the provisions of section 113.14(g)(1)(ii) of the Customs Regulations (19 CFR 113.14(g)(1)(ii)) apply?

Facts.—No facts are presented.

Law and analysis.— Section 113.14(g)(1)(ii) provides that a bond

in an amount equal only to "double the estimated amount of ordinary Customs duty on the merchandise (including any taxes required by law to be treated as duties) plus the estimated amount of any other tax or taxes on the merchandise collectible by the district director" will be required when the merchandise involved remains in Customs custody until certain conditions are met. This is an exception to the bond amount of the value of the articles plus estimated duties and taxes which is usually required for an immediate delivery and consumption entry bond.

The provisions of section 113.14(g)(1)(ii) do not apply in any case where the bond relates to a special permit for immediate delivery under section 142.4 of the Customs Regulations (19 CFR 142.4). Bonds relating to immediate delivery procedures are covered by section 113.14(g)(1)(iv) which requires a bond in the amount equal to the value of the articles based on information furnished in the application, plus estimated duties and taxes. Such a high amount is required for a bond under immediate delivery procedures in order to insure performance of various requirements by the importer. These are: (1) Proper entry with payment of estimated duties. Under immediate delivery procedures, entry does not have to be made and estimated duties and taxes do not have to be deposited for 10 days after any part of the merchandise is released. Section 142.11(a) of Customs Regulations. Under consumption entry procedures, estimated duty and taxes must be deposited before the merchandise will be released. (2) Payment of any additional duties found to be due upon liquidation. Notwithstanding that examination of the merchandise is made by an inspector under immediate delivery procedures, until such time as the invoice is reviewed by the Import Specialist, the correctness of values and other information cannot be substantiated. (3) Redelivery of imported merchandise to Customs custody when needed for purposes of examination, inspection, or appraisement, or when found not to comply with the laws of the United States. (4) Delivery of various documents and the performance of conditions under which merchandise is released. If the bond required were not so high, it would often be more advantageous for the bond to be forfeited than for the importer to comply with Customs requests. For example, paying a bond's penal sum may cost less than redelivering goods or bringing them into compliance with health and safety standards. Because some safeguards are missing under immediate delivery procedures a bond with a higher amount is required.

Furthermore, section 113.14(g)(1)(ii) is not applied in all instances where merchandise is authorized for delivery under a duty paid consumption entry. This section has three additional conditions governing the length of time the merchandise involved will remain in Customs

custody. The merchandise must remain in Customs custody until all three conditions are met. Condition (a) provides that an examination of the merchandise must be completed. This examination is basically the same as the one required under section 142.6 before merchandise may be released under a special permit for immediate deliver. Condition (b) provides that the merchandise must stay in custody until "it is found to be truly and correctly invoiced." This condition could keep merchandise in custody for an undetermined time pending final appraisement. Condition (c) provides that the merchandise must stay in custody until "it is determined that its release is not precluded by law or regulation and it is entitled to admission into the commerce of the United States." This condition keeps merchandise in custody pending resolution of marking problems, requirements of other agencies (such as the Environmental Protection Agency or the Food and Drug Administration), and trademark and copyright matters, to name a few. All three conditions must be met before the bond can be set in an amount equal to double the estimated duty (plus taxes). Otherwise, the amount required on the bond must be the value of the articles plus estimated duties and taxes under section 113.14(g)(1).

Finally, it should be noted that under section 113.15 the district director may approve an immediate delivery and consumption entry bond only if he is satisfied that the amount of the bond is sufficient.

Holding.—The provisions of 19 CFR 113.14(g)(1)(ii) do not apply in any case where the bond relates to a special permit for immediate delivery. The provisions apply only in a case where the three conditions listed are satisfied before the merchandise is released from Customs custody.

(C.S.D. 80-73)

Drawback: 19 U.S.C. 1313(c); Reliquidation Claim Based on Delay by Customs

Date: August 1, 1979
File: DRA-1-09-R:CD:D B
210639

Issue.—May a person or company claiming drawback under 19 U.S.C. 1313(c) obtain reliquidation because of a delay by Customs in sending documents to Customs personnel at the point of exportation prior to lading and exportation of the merchandise upon which drawback is claimed?

Facts.—Drawback was denied on merchandise covered by three exportations because the merchandise was not returned to Customs custody for examination prior to exportation.

From February, 1973 until late 1978, Customs drawback personnel at Baltimore had a policy of accepting and reviewing drawback entries for claims under 1313(c) and if found to be in order, the papers were routed directly to the pier or other location where the merchandise had been placed by the importer or importer's agent. This policy has since been discontinued because Customs personnel discovered that this practice conflicted with section 22.33(a), Customs Regulations, although brokers and importers had found this procedure satisfactory until the EIS computer system was implemented.

The implementation of the EIS computer system has caused at least one day's delay from the time of submission of an entry to the time of delivery of the papers to the place of exportation because of the necessity of coding the papers for computer input. After implementation of the EIS system but before the Customs procedure described previously was abandoned, a drawback claimant filed three 1313(c) drawback entries.

The first drawback entry was filed on February 10, 1978, and the remaining two were filed on March 20, 1978. In each case, by the time approval by the import team, routing of the entry documents to the Entry Control Division for coding, and forwarding of the documents to the appropriate pier had occurred, the merchandise had been laden, leaving the inspector unable to examine the cargo.

The two entries filed on March 20, 1978 (128330–1), were liquidated "no drawback" on September 15, 1978. The first entry filed (120514 of February 20, 1978) has not been liquidated pending receipt of the relevant consumption entry papers from another customs port.

The entrant claims that it was the fault of Customs personnel that they were not given custody and afforded an opportunity to examine the merchandise. The claimant further states that drawback should be allowed on the unliquidated entry and that the two liquidated entires should be reliquidated pursuant to section 1520(c)(1), title 19, United States Code, and drawback allowed on them as well.

Law and analysis.—Section 1313(c), title 19, United States Code, provides, in relevant part:

> Upon the exportation of merchandise not conforming to sample or specification * * * upon which duties have been paid and which have been entered * * * and, within 90 days after release from customs custody * * * (are) *returned to customs custody* for exportation * * *. [Italic added.]

Section 22.33(a), Customs Regulations, provides, in relevant part:

> Upon receipt of the drawback entry, the District Director shall assign a number thereto * * * approve the place of deposit of the merchandise specified by the person making entry * * * and return the original (copy of the entry) to the entrant for

presentation *with the merchandise to the Customs officers at the place of deposit.* [Italic added.]

Section 1514, title 19, United States Code, provides that with certain exceptions decisions of the appropriate Customs officer in denying drawback must be protested within 90 days of the notice of liquidation or reliquidation, or the decision is final. It is clear that the decision of denial on the two entries filed March 20, 1978, and reliquidated no drawback on September 15, 1978, have become final unless the drawback claimant can show that the action of the district director falls within one of the exceptions set out in section 1514. One of these exceptions is section 1520(c)(1), title 19, United States Code, which provides:

> (c) Notwithstanding a valid protest was not filed, the appropriate customs officer may * * * reliquidate an entry to correct (1) a clerical error, mistake of fact, or other inadvertence not amounting to an error in the construction of a law * * * in any entry, liquidation, or other customs transaction, when the error, mistake, or inadvertence is brought to the attention of the customs service within 1 year after the date of entry, or transaction, or within 90 days after liquidation * * * when the liquidation * * * is made more than 9 months after the date of entry * * *.

The alleged error or mistake was not brought to the attention of Customs until some time after April 24, 1979, the date of a letter from the claimant's broker to the District Director at Baltimore. It is clear that this date is more than 1 year after entry; thus section 1520(c)(1) is unavailable to the claimant for the two March 20, 1978 entries.

Holding.—The alleged error or mistake was not timely called to the attention of Customs, as required by section 1520(c)(1) in the case of the two March 20, 1978 entries. Therefore, these two entries cannot be reliquidated.

In regard to the remaining entry, Customs field personnel should make a determination of whether their actions in not following the requirements of section 22.33(a) was the cause of the applicant's failure to have the merchandise examined prior to exportation.

(C.S.D. 80-74)

Duty Assessment: Reimportation of Duty-Paid Merchandise Exported in Error; Nonexportation-Nonimportation Principle

Date: August 3, 1979
File: ENT-1-01-R:E:E
710565 M

This ruling reviews a protest regarding the sufficiency of the doc-

umentation submitted to establish whether the merchandise involved was previously imported into the United States and accidentally taken back into Canada.

Issue.—Was the District Director's refusal to accept the documentation submitted as establishing proof that the merchandise was accidentally returned to Canada a clerical error, mistake of fact, or other inadvertence within the meaning of section 520(c)(1), Tariff Act of 1930, as amended?

Facts.—On April 22, 1978, a railcar containing a carload of wrapping paper arrived at International Falls, Minn. On May 5, 1978, a consumption entry was filed for that merchandise along with the deposit of estimated duties.

On May 12, 1978, this same railcar left Detroit and entered Canada at the Port of Windsor as an empty car. This same railcar arrived at Detroit on June 14, 1978, from Canada containing a carload of wrapping paper. On July 6, 1978, a consumption entry was filed for the wrapping paper along with the deposit of estimated duties.

The importer contends that the merchandise for which a consumption entry was filed on July 6, was the same merchandise for which a previous consumption entry had been filed on May 5. He states that the merchandise was accidentally taken back to Canada and that such merchandise on its return to the United States should have been exempt from duty under the nonexportation-nonimportation principle. In support of his contention, the importer submitted a copy of a Canadian Customs landing certificate dated June 5, 1978, which states that the railcar arrived at Windsor on May 12, 1978, from the United States and has remained in continuous railway custody while in Canada. In addition, the importer submitted a rail waybill dated May 25, 1978, with a statement to the effect that the railcar arrived at Richmond, Ontario, as empty and was found loaded. The importer points out that in the past Customs has accepted such documentation in support of a nonexportation-nonimportation claim and that the District Director's failure to accept such documentation amounted to a clerical error, mistake of fact, or other inadvertence within the meaning of section 520(c)(1), Tariff Act of 1930, as amended. The importer also contends that Customs failed to follow CIE 477/59 dated March 30, 1959, which provides for duty-free entry clearance of previously imported merchandise under the nonexportation-nonimportation principle.

The District Director contends that the documentation submitted by the importer to support his request for duty free entry is inconclusive and moreover, deals with the railcar rather than the merchandise itself. He notes that in 1976, Canadian Customs stopped manning its ports of entry at all rail terminals in favor of a post audit and spot

check system. In the past the Canadian Customs landing certificate would indicate that the rail car was in Canadian Customs custody. Now, this landing certificate merely states such car was in continuous railway custody. Furthermore, the rail companies, as a cost-saving measure, no longer check railcars entering Canada. Because of these changed conditions, the District Director contends that the documentation submitted by the importer is no longer sufficient to establish that the merchandise entered at Detroit on July 6, 1978, is exempt from duty under the nonexportation-nonimportation principle. The District Director notes that the importer did not satisfy the two conditions set forth in CIE 477/59 dated March 30, 1959.

Law and analysis.—Section 520(c)(1), Tariff Act of 1930, as amended (19 U.S.C. 1520(c)(1)) authorizes the District Director to reliquidate an entry within an appropriate time period if a clerical error, mistake of fact, or other inadvertence not amounting to an error in the construction of law is involved.

Nassau Distributing Co., Inc. v. *United States*, 29 Cust. Ct. 151, C.D. 1459, and *F. W. Meyers & Co., Inc.* v. *United States*, 29 Cust. Ct. 202, C.D. 1468, in effect, provided that merchandise previously imported could be considered upon its return to the United States as not having been truly exported and therefore not imported at that time if the documentary evidence establishes that at the time of shipment there was no intention to export and if the merchandise involved was not mingled with and became a part of the mass of things belonging to the foreign country to which it was transported.

CIE 477/59 dated March 30, 1959, states that previously imported merchandise may be cleared without entry under the nonexportation-nonimportation principle if (1) a written statement by the foreign customs stating that the merchandise remained in its custody during its stay in the foreign country, and (2) a written explanation by the carrier concerning the overcarriage of the merchandise are furnished, provided the U.S. Customs officer is satisfied by the documentary evidence that the goods were sent to the foreign country without any intention that they enter the trade and commerce of that country.

We agree with the District Director's determination that the evidence submitted by the importer did not support a claim for duty-free exemption under the nonexportation-nonimportation principle. Because of a change in procedure by Canadian Customs, as mentioned above, the Canadian Customs landing certificate no longer reflects that the railcar was in continuous Canadian Customs custody. This matter is compounded by the fact that the rail companies no longer check railcars entering Canada and thus the rail waybill would not truly reflect the fact that the wrapping paper was taken back to Canada. The evidence submitted by the importer merely establishes

that the railcar was taken back to Canada, but does not establish that the merchandise brought in by that railcar on April 22, 1978, was taken back.

In addition, the importer has failed to satisfy the two conditions set forth in CIE 477/59 dated March 30, 1975. The evidence submitted by the importer did not contain a foreign customs document reflecting that the merchandise remained in its custody during its stay in the foreign country and an explanation by the carrier in regard to the overcarriage of the merchandise.

Holding.—The documentation submitted by the importer was not sufficient to show that his merchandise qualified for exemption from duty under the nonexportation-nonimportation principle. Thus, the District Director's denial of the importer's claim was not a clerical error, mistake of fact, or other inadvertence within the meaning of section 520(c)(1), Tariff Act of 1930, as amended. The protest is therefore denied in full.

(C.S.D. 80-75)

Conditionally Free Merchandise: Foreign-Made Tools of Trade

Date: August 3, 1979
File: BAG-5-05-R:E:E
710884 HS

To: District Director of Customs, Chicago, Ill.
From: Director, Entry Procedures and Penalties Division, Headquarters.
Subject: Tools of Trade Exception.

This was initiated by (name). It concerns a duty charged on equipment shipped out of the country and subsequently reimported.

Issue.—May a Japanese-made industrial fiberscope and a cold light source that are shipped out of the country by a corporation as professional tools for the internal inspection of steam and cooling systems be reimported duty-free?

Facts.—The company purchased an industrial fiberscope and a cold light source that were manufactured in Japan. Import duty was paid when the merchandise was brought in from Japan. The equipment is used by the company's technical sales representatives as professional tools for the internal inspection of steam and cooling systems. Use of the equipment is controlled by the company's product manager.

In this case, the product manager took the fiberscope and light source to O'Hare Airport in Chicago and shipped the equipment to one of the company's salesmen in Canada. The salesman used the equipment to inspect his customer's equipment. When the test was

completed, the salesman took the equipment to the airport and sent it back to the product manager. Nothing was bought or sold during the trip. No value was added to the equipment. Upon entry, the District Director charged a duty on the importation of the equipment. The company requests an exemption from duty.

Law and analysis.—Item 800.00 of the Tariff Schedules of the United States (1978) allows free entry for products of the United States which are exported for temporary use abroad if the articles are returned without having been advanced in value or improved in condition while abroad. In this case, the equipment was manufactured in Japan. As it is not a product of the United States, the equipment is not entitled to free entry under this item of the Tariff Schedules.

There is no specific provision that exempts from duty merchandise assigned to and entered by or for the account of a corporation. Item 810.20 of the Tariff Schedules provides duty-free entry for tools of trade, occupation or employment, which have been taken abroad by or for the account of any person arriving in the United States from a foreign country. This is a personal exemption, available only to individuals. A corporation could bring equipment into the country under this exemption if an individual of the corporation took the equipment in and out of the country in his own name.

T.D. 53136 makes this possible by providing that ownership of tools of trade is not a condition for free entry. Merchandise of domestic or foreign origin exported from the United States and reimported by the same individual, even though the tools are not his personal property, can qualify for free entry under item 810.20.

In this case, an individual—the product manager—had responsibility for the fiberscope and cold light source. However, the product manager shipped the equipment to a salesman in Canada and the salesman shipped the equipment back to the product manager; there was no person arriving in the United States from a foreign country, which is required for the tools of trade exemption to apply. One individual must be in the foreign country when the equipment is in the foreign country and the same individual must return to the United States when the equipment returns. As this did not occur in this case, the equipment is not entitled to free entry as tools of trade, and duty must be paid.

Holding.—Foreign-made equipment that is not exported from the United States and reimported by the same individual is not entitled to exemption from duty either as articles exported and returned or as tools of trade under items 800.00 or 810.20 of the Tariff Schedules, respectively.

Decisions of the United States Customs Court

United States Customs Court

One Federal Plaza
New York, N.Y. 10007

Chief Judge

Edward D. Re

Judges

Paul P. Rao
Morgan Ford
Scovel Richardson
Frederick Landis
James L. Watson
Herbert N. Maletz
Bernard Newman
Nils A. Boe

Senior Judge

Samuel M. Rosenstein

Clerk

Joseph E. Lombardi

Custom Rules Decision

(C.R.D. 80–4)

SHELL OIL CO., PLAINTIFF, *v.* UNITED STATES, DEFENDANT

Court No. 75–12–03287

Refusal to reliquidate

[Cross-motions for summary judgement denied; motion to dismiss denied.]

(Dated May 6, 1980)

Shaw and Stedina (*Charles P. Deem* on the briefs) for the plaintiff.
Alice Daniel, Assistant Attorney General; *David M. Cohen*, Director, Commerical Litigation Branch (*Sheila N. Ziff* on the briefs), for the defendant.

FORD, Judge: This action is before me on cross-motions for summary

judgment made pursuant to rule 8.2 of the rules of this court. Defendant has also moved pursuant to rule 4.7(b) of the rules of this court for dismissal of the consolidated action on the ground the court lacks jurisdiction.

The merchandise consists of petroleum products manufactured in the United States by plaintiff and thereafter exported. The primary question presented is whether the exported merchandise, manufactured from acetone and crude wax, is entitled to drawback. In addition, the question of the timeliness of the claims as well as the designation of rates for drawback purposes of the acetone and crude wax is involved. An additional question exists as to whether there are valid grounds for relief under section 520(c)(1) of the Tariff Act of 1930, as amended.

A motion for summary judgment, made pursuant to rule 8.2, which is "ripe" for determination, is premised upon the fact that there is no genuine issue as to any material fact. Plaintiff has set forth 38 paragraphs alleging that no issue of material fact exists, and defendant has set forth 50 paragraphs for the same purpose. Defendant further alleges, but contends it is not material to the decision, a dispute of four paragraphs of plaintiff's statement as to lack of a genuine issue of any material fact. These paragraphs are 15, 18, 26, and 27. Plaintiff disputes seven paragraphs of defendant's statement as to lack of genuine issue of any material fact. They are paragraphs 19, 20, 21, 47, 48, 49, and 50. The court is under no duty to grant summary judgment merely because both parties are under the belief that there are no factual issues to be tried. *C. J. Tower & Sons* v. *United States*, 68 Cust. Ct. 377, C.R.D. 72–11, 343 F. Supp. 1387 (1972); *L. B. Watson* v. *United States*, 75 Cust. Ct. 185, C.R.D. 75–5 (1975).

As indicated, supra, in order for the court to properly entertain a motion for summary judgment, it must be convinced that there are no genuine issues as to any material fact. Aside from the disagreement of the parties with respect to the 11 paragraphs referred to above, the court is of the opinion that other genuine issues of material fact exist, and accordingly the matter is not ripe for summary judgment. *Braniff Airways, Inc.* v. *United States, 84 Cust. Ct.—*, C.D. 4837 (1980).

Defendant's motion to dismiss for lack of jurisdiction presents, in the opinion of the court, questions which would better be resolved by trial in view of the history of the attempts by plaintiff to obtain a drawback rate.

In view of the foregoing, this action is properly the subject of a trial, and not a motion for summary judgment.

It Is Hereby Ordered that the cross-motions for summary judgment and the motion to dismiss are denied.

Decisions of the United States Customs Court

Abstracts

Abstracted Protest Decisions

DEPARTMENT OF THE TREASURY, *May 12, 1980.*

The following abstracts of decisions of the United States Customs Court at New York are published for the information and guidance of officers of the customs and others concerned. Although the decisions are not of sufficient general interest to print in full, the summary herein given will be of assistance to customs officials in easily locating cases and tracing important facts.

ROBERT E. CHASEN,
Commissioner of Customs.

DECISION NUMBER	JUDGE & DATE OF DECISION	PLAINTIFF	COURT NO.	ASSESSED	HELD	BASIS	PORT OF ENTRY AND MERCHANDISE
				Par. or Item No. and Rate	Par. or Item No. and Rate		
P80/67	Re, C.J. May 9, 1980	Olympia Sports Co., Inc.	77-5-00744, etc.	Item 705.35 15%	Item 735.05 7.5%	David E. Porter v. U.S. (C.D. 4641)	New York Leather gloves, style Nos. 600, 604, 650
P80/68	Richardson, J. May 9, 1980	Flextrac Nodwell, Ltd., a/c Border Brokerage Co., Inc., et al.	77-4-00639	Item 358.06 16%, 14%, 12.5% or 11%	Item 692.27 8.5%, 7.5%, 6.5% or 5.5%	Border Brokerage Company, Inc. v. U.S. (C.D. 4756)	Blaine (Seattle) Track tread material for motor vehicles

P80/69	Watson, J. May 9, 1980	Ruben's Originals	78-2-00311	Item 737.40 17.5%	Item 773.10 8.5%	Judgment on the pleadings	Los Angeles Plastic animals
P80/70	Watson, J. May 9, 1980	Ruben's Originals	78-2-00229	Item 737.40 17.5%	Item 773.10 8.5%	Judgment on the pleadings	Los Angeles Plastic animals

Decisions of the United States Customs Court

Abstracts

Abstracted Reappraisement Decisions

DECISION NUMBER	JUDGE & DATE OF DECISION	PLAINTIFF	COURT NO.	BASIS OF VALUATION	HELD VALUE	BASIS	PORT OF ENTRY AND MERCHANDISE
R80/144	Re, C.J. May 8, 1980	J. E. Higgins Lumber Co.	R58/23470, etc.	Export value	Net appraised value less 7¼%, net packed	U.S. v. Getz Bros. & Co. et al. (C.A.D. 927)	San Francisco Japanese plywood
R80/145	Re, C.J. May 8, 1980	C. J. Tower & Sons of Buffalo, Inc.	R69/482	Cost of production	As set forth in decision and judgment in column designated "Total Cost of Production of Basic Automobiles" at amounts in Canadian currency, including value of U.S. components as appraised; value of optional equipment on each automobile in Canadian currency is value found by appraising official as reflected on invoices	U.S. v. C. J. Tower & Sons of Buffalo, Inc. (C.A.D. 1079)	Buffalo Studebaker automobiles and optional equipment

R80/146	Re, C. J. May 8, 1980	C. J. Tower & Sons of Buffalo, Inc.	R69/493	Cost of production	As set forth in decision and judgment in column designated "Total Cost of Production of Basic Automobiles" at amounts in Canadian currency, including value of U.S. components as appraised; value of optional equipment on each automobile in Canadian currency is value found by appraising official as reflected on invoices	U.S. v. C. J. Tower & Sons of Buffalo, Inc. (C.A.D. 1079)	Buffalo, Studebaker automobiles and optional equipment
R80/147	Re, C.J. May 8, 1980	C. J. Tower & Sons of Buffalo, Inc.	R69/494	Cost of production	As set forth in decision and judgment in column designated "Total Cost of Production of Basic Automobiles" at amounts in Canadian currency, including value of U.S. components as appraised; value of optional equipment on each automobile in Canadian currency is value found by appraising official as reflected on invoices	U.S. v. C. J. Tower & Sons of Buffalo, Inc. (C.A.D. 1079)	Buffalo Studebaker automobiles and optional equipment

DECISION NUMBER	JUDGE & DATE OF DECISION	PLAINTIFF	COURT NO.	BASIS OF VALUATION	HELD VALUE	BASIS	PORT OF ENTRY AND MERCHANDISE
R80/148	Re, C. J. May 8, 1980	C.J. Tower & Sons of Buffalo, Inc.	R69/496	Cost of production	As set forth in decision and judgment in column designated "Total Cost of Production of Basic Automobiles" at amounts in Canadian currency, including value of U.S. components as appraised; value of optional equipment on each automobile in Canadian currency is value found by appraising official as reflected on invoices	U.S. v. C. J. Tower & Sons of Buffalo, Inc. (C.A.D. 1079)	Buffalo Studebaker automobiles and optional equipment
R80/149	Watson, J. May 9, 1980	Hayim & Co.	R60/2393, etc.	Export value	F.o.b. unit invoice prices plus 20% of difference between f.o.b. unit invoice prices and appraised values	Agreed statement of facts	New York Rugs
R80/150	Watson, J. May 9, 1980	Hayim & Co.	R60/7336, etc.	Export value	F.o.b. unit invoice prices plus 20% of difference between f.o.b. unit invoice prices and appraised values	Agreed statement of facts	New York Rugs
R80/151	Watson, J. May 9, 1980	Hayim & Co.	R62/1952, etc.	Export value	F.o.b. unit invoice prices plus 20% of difference between f.o.b. unit invoice prices and appraised values	Agreed statement of facts	New York Rugs

R80/152	Watson, J. May 9, 1980	Hurricane International	R65/20210	Export value	F.o.b. unit invoice prices plus 20% of difference between f.o.b. unit invoice prices and appraised values	Agreed statement of facts	San Francisco Rugs
R80/153	Watson, J. May 9, 1980	New York Merchandise Co., Inc.	R67/8970	Export value	Appraised unit values less 7.5%, net packed	Agreed statement of facts	San Diego Rugs
R80/154	Watson, J. May 9, 1980	New York Merchandise Co., Inc.	R65/17958, etc.	Export value	F.o.b. unit invoice prices plus 20% of difference between f.o.b. unit invoice prices and appraised values	Agreed statement of facts	San Diego Rugs
R80/155	Watson, J. May 9, 1980	J. C. Penney	R60/18888	Export value	Appraised unit values less 7.5%, net packed	Agreed statement of facts	Los Angeles All tubing mats
R80/156	Watson, J. May 9, 1980	J. C. Penney	R60/19749	Export value	Appraised unit values less 7.5%, net packed	Agreed statement of facts	New York All tubing mats

Judgment of the U.S. Customs Court in Appealed Case

MAY 9, 1980

APPEAL 79-19.—United States *v.* Endicott Johnson Corporation.—COTTON CANVAS SHOE UPPERS—ARCH STITCHING—COTTON ARTICLES, ORNAMENTED—COTTON ARTICLES, NOT ORNAMENTED—TSUS.—C.D. 4787 affirmed March 13, 1980 (C.A.D. 1242).

Recent Unpublished Customs Service Decisions

The following listing of recent administrative decisions issued by the Office of Regulations and Rulings, U.S. Customs Service, and not otherwise published, is published for the information of Customs officers and the importing community. Although the decisions are not of sufficient general interest to warrant publication as Treasury Decisions, the listing describes the issues involved and is intended to aid Customs officers and concerned members of the public in identifying matters of interest which recently have been considered by the Office of Regulations and Rulings.

A copy of any decision included in this listing, identified by its date and file number, may be obtained in a form appropriate for public distribution upon written request to the Office of Regulations and Rulings, Attention: Legal Reference Area, room 2404, U.S. Customs Service, 1301 Constitution Avenue, NW., Washington, D.C. 20229. These copies will be made available at a cost to the requester of 10 cents per page. However, the Customs Service will waive this charge if the total number of pages copied is 10 or less.

Decisions listed in earlier issues of the CUSTOMS BULLETIN, through December 21, 1979, are available in microfiche format at a cost of $17.70 (15 cents per sheet of fiche). It is anticipated that additions to the microfiche will be made quarterly and subscriptions are available. Requests for the microfiche now available and for subscriptions should be directed to the Legal Reference Area. Subscribers will automatically receive updates as they are issued and will be billed accordingly.

Dated: May 19, 1980.

JOHN T. ROTH,
Acting Director,
Regulations and Research Division.

Date of decision	File No.	Issue
4-24-80	104415	Vessel repair: Whether a vessel documented under the laws of the United States and used solely as an oceanographic research vessel is subject to the vessel repair statute

Date of decision	File No.	Issue
4-20-80	711722	Reliquidation: Grounds for reliquidation under 19 U.S.C. 1520(c)(1)
4-14-80	712602	Country-of-origin marking: Whether raised lettering on imported batteries meets the requirements of 19 U.S.C. 1304
4-14-80	712790	Prohibited and restricted importations: Trademark infringement: Trousers
4-17-80	064496	Classification: Inflatable globe (273.30)
4-17-80	064708	Classification: Gang mowers (666.00, 666.10, 870.40)

International Trade Commission Notices

Investigations by the U.S. International Trade Commission

DEPARTMENT OF THE TREASURY

The appended notices relating to investigations by the U.S. International Trade Commission are published for the information of Customs Officers and others concerned.

R. E. CHASEN,
Commissioner of Customs.

In the Matter of CERTAIN COMPUTER FORMS FEEDING TRACTORS AND COMPONENTS THEREOF	Investigation No. 337-TA-77

Notice of Commission Determination Amending Complaint

BACKGROUND

On March 3, 1980, respondents Shinshu Seiki Co. and Epson America, Inc., filed a motion (motion No. 77-1) to dismiss the complaint of Precision Handling Devices, Inc., and to terminate the investigation. Respondents argued that the assignment dated April 4, 1973, which was attached to the complaint, did not assign to the complainant U.S. Letters Patent No. 3,825,162, since under the wording of the assignment, only the rights to a "design letters patent" were assigned and the '162 patent is not a design patent.

On March 17, 1980, complainant filed an affidavit by Leo Hubbard confirming that Hubbard intended to assign the '162 patent to complanant Precision Handling Devices, Inc. On March 19, 1980, respondent filed a reply to the affidavit, stating that the assignment by its terms was not an assignment of the '162 patent, and failed to act as an assignment of the "utility patent."

On March 27, 1980, complainant moved (motion No. 77-4) to

amend the complaint by adding the inventor Leo Hubbard as a party, and by attaching to the complaint a new assignment in which the inventor assigned all the rights in the '162 patent to complainant Precision Handling Devices, Inc., and confirmed that the old assignment had assigned rights under the '162 patent to Precision.

Respondents answered complainant's motion (motion No. 77–4) to amend complaint on April 1, 1980, contending that the new assignment, by conveying all rights in the '162 patent to Presicion Handling Devices, Inc., put the inventor Leo Hubbard in a position where he now has no standing to sue. Although the respondent did not oppose complainant's motion to amend the complaint, they reserve the right to two defenses: (1) That the investigation was improperly initiated by reason of complainant's lack of title to the patent in question, and (2) that the inventor, if added now as a complainant, would have no standing to sue because of the unconditional assignment of the patent to complainant Precision Handling Devices, Inc.

On April 9, 1980, Administrative Law Judge Saxon recommended first that motion 77–4 be granted to amend the complaint by adding a "confirmatory assignment," thereby curing complainant Precision Handling Devices, Inc., initial lack of standing, and second, to add as complainant Leo James Hubbard, the inventor named in U.S. Letters Patent No. 3,825,162. It was further recommended that no action on the respondent's motion 77–1 was required.

COMMISSION DETERMINATION

Having considered the recommendation of the presiding officer and the submissions of the parties, the Commission Determines that complainant's motion (motion No. 77–4) is granted in part. The complaint is amended to include a "confirmatory assignment" as an attachment thereto, so as to be part of the attachments listed in paragraph 25 of the complaint, thereby curing any problem which existed as to complainant Precision's initial lack of standing in this investigation. The Commission further determines that that part of complainant's motion 77–4 seeking to amend the complaint to add Leo J. Hubbard, the inventor of the '162 patent, as a co-complainant is denied.

The Commission determines to deny respondents' motion 77–1 to dismiss the complaint and terminate the investigation.

A copy of the Commission's memorandum opinion is available in the Office of the Secretary of the Commission.

By order of the Commission.

Issued: May 12, 1980.

KENNETH R. MASON,
Secretary.

In the Matter of CERTAIN PRECISION RESISTOR CHIPS	Investigation No. 337-TA-63/65

Notice of Termination

Upon consideration of the presiding officer's recommendation and the record in this proceeding, the Commission is ordering the termination of investigation No. 337-TA-63/65, Certain Precision Resistor Chips.

The order is effective as of May 9, 1980.

Any party wishing to petition for reconsideration of the Commission's action must do so within 14 days of service of the Commission order. Such petitions must be in accord with Commission rule 210.56 (19 CFR 210.56).

Copies of the Commission's action and order, the Commissioners' opinion(s), and any other public documents in this investigation are available to the public during official working hours (8:45 a.m. to 5:15 p.m.), in the Office of the Secretary, U.S. International Trade Commission, 701 E Street NW., Washington, D.C. 20436; telephone 202-523-0161.

Notice of the institution of this investigation was published in the Federal Register of January 17, 1979, and April 25, 1979 (44 F.R. 3575, 44 F.R. 25522).

By order of the Commission.

Issued: May 9, 1980.

KENNETH R. MASON,
Secretary.

In the Matter of CERTAIN AIRTIGHT CAST-IRON STOVES	Investigation No. 337-TA-69

Remand of Order No. 69-24

On April 28, 1980, the presiding officer in the above-captioned case issued order No. 69-24, certifying a motion and consent order agreements to the Commission. The Commission is remanding that order to the presiding officer in order to obtain a recommendation regarding whether the consent order agreements should be accepted.

Proposed section 337 consent order rules provide, in proposed section 210.51(a)(2), that: "The licensing or other agreement and any agreements supplemental thereto, and affidavit shall be certified by the presiding officer to the Commission with his recommendation."

Although the proposed consent order rules are not in effect, the Commission believes that having the benefit of a recommendation by the presiding officer is beneficial and in conformance with sound administrative practice. Although rule 210.14 of the Commission's Rules of Practice and Procedure reserve certain public interest factors to the Commission for initial consideration, these factors are not exhaustive of all public interest and equitable considerations that the Commission takes into account when deciding whether to accept an agreement. The practice of obtaining a recommendation from the presiding officer has been followed with regard to settlement agreements. *See Certain Resistor Chips*, investigation No. 337–TA–63/65 (Recommended Determination of February 22, 1980). The same procedure has been followed with regard to consent order agreements. See *Certain Cattle Whips*, invesitgation No. 337–TA–57 (Recommended Determination of April 11, 1979).

The Commission therefore requests that the presiding officer make recommendations regarding the consent order here in issue.

By order of the Commission.

Issued: May 9, 1980.

KENNETH R. MASON,
Secretary.

(19 CFR Part 200)

EMPLOYEE RESPONSIBILITIES AND CONDUCT

AGENCY: U.S. International Trade Commission.

ACTION: Final rules.

SUMMARY: These rules establish procedures for administrative enforcement of the restrictions on postemployment activity contained in title V of the Ethics in Government Act of 1978, Public Law No. 95–521, 92 Stat. 1864 (18 U.S.C. 207) (as amended by Public Law No. 96–28, 93 Stat. 76 (1979)) with respect to former employees of the U.S. International Trade Commission.

EFFECTIVE DATE: May 15, 1980.

FOR FURTHER INFORMATION CONTACT: The Honorable Bill Alberger, Ethics Counselor, or Claud L. Gingrich, Esq., Deputy Counselor, U.S. International Trade Commission, 701 E Street, NW., Washington, D.C. 20436; telephone 202–523–0133, or 202–523–0493, respectively.

SUPPLEMENTARY INFORMATION: On October 26, 1978, Congress enacted the Ethics in Government Act of 1978. Title V of the act amended 18 U.S.C. 207, which restricts postemployment con-

flicts of interest. Congress further amended 18 U.S.C. 207 on June 22, 1979, with passage of Public Law No. 96–28, 93 Stat. 76. Subsection 207(j) of title V provides for administrative sanctions to be applied by an agency to a former officer or employee found to have violated subsections 207 (a), (b), or (c). Agencies are required, in consultation with the Director of the Office of Government Ethics, to establish procedures for handling allegations of a violation of subsections (a), (b), or (c), affording the affected former officer or employee notice and opportunity for a hearing, and applying an administrative sanction if a violation is found.

After consulting with the Director, the U.S. International Trade Commission published proposed administrative enforcement rules in the Federal Register (55 F.R. 11512) on February 21, 1980. Notice was given that comments were to be submitted by March 24, 1980. Only one comment was received, a request for clarification of which former employees are subject to the enforcement procedures. The rules apply to anyone who has been a Government employee since the effective date of the act. No date is specified in our rules because it differs for different restrictions and because it is inappropriate to restate the substantive restrictions in the Commission's enforcement rules.

Title 19, part 200, of the Code of Federal Regulations is hereby amended by the addition of a new subpart D, to be composed of sections 200.735–124 through 126, as follows:

CONTENTS

SUBPART D—PROVISIONS FOR ADMINISTRATIVE ENFORCEMENT OF POSTEMPLOYMENT CONFLICT OF INTEREST RESTRICTIONS

200.735–124. General.
200.735–125. Exemption from restrictions.
200.735–126. Administrative enforcement proceedings.

AUTHORITY: Ethics in Government Act of 1978, Public Law No. 95–521, 92 Stat. 1864 (18 U.S.C. 207) (as amended by Public Law No. 96–28, 93 Stat. 76 (1979)); 45 F.R. 7402, (1979) (to be codified at 5 CFR part 737).

SUBPART D—PROVISIONS FOR ADMINISTRATIVE ENFORCEMENT OF POSTEMPLOYMENT CONFLICT OF INTEREST RESTRICTIONS

Sec. 200.735–124. General.

The procedures in this subpart are established pursuant to subsection 207(j) of title 18, United States Code, for the administrative enforcement of the restrictions on postemployment activities in title V of the Ethics in Government Act of 1978 (18 U.S.C. 207 (a), (b), and (c)) and implementing regulations published by the Office of

Government Ethics (5 CFR part 737). Subsections 207 (a), (b), and (c) of title 18, United States Code, prohibit certain forms of representational activity or communications by former Commission employees.

Sec. 200.735–125. Exemption from restrictions.

(a) *Scientific and technological information solicited by the Commission.*—Communications of a former Commission employee solely for the purpose of furnishing scientific or technological information solicited by the Commission in the course of its statutory investigations are exempted from the restrictions on postemployment practices.

(b) *Exemption for persons with special qualifications in a technical discipline.*—(1) *Applicability.*—A former Commission employee may be exempted from the restrictions on postemployment practices if the chairman, in consultation with the Director, Office of Government Ethics (the Director), executes a certification published in the Federal Register that the former Commission employee has outstanding qualifications in a scientific, technological, or other technical discipline; that the former Commission employee is acting with respect to a particular matter which requires such qualifications; and that the national interest would be served by the former Commission employee's participation.

(2) *Certification authority.*—Certification shall be by the chairman, or in the absence thereof, by the acting head of the Commission. Consultation with the Director shall precede any certification. The exemption is effective upon the execution of the certification. The Secretary shall immediately transmit the certification to the Federal Register for publication.

(c) *Testimony and statement under oath or subject to penalty of perjury.*—(1) *Applicability.*—A former Commission employee may testify before any court, board, commission, or legislative body with respect to matters of fact within the personal knowledge of the former Commission employee. This provision does not, however, allow a former Commission employee, otherwise barred under 18 U.S.C. 207 (a), (b), or (c), to testify on behalf of another as an expert witness except (i) to the extent that the former employee may testify from personal knowledge as to occurrences which are relevant to the issues in the proceeding, including those in which the Commission employee participated, utilizing his or her expertise, or (ii) in any proceeding where it is determined that another expert in the field cannot practically be obtained, that it is impracticable for the facts or opinions on the same subject to be obtained by other means, and that the former Commission employee's testimony is required in the interest of justice.

(2) *Statements under penalty of perjury.*—A former Commission employee may make any statement required to be made under penalty

of perjury, such as those required in registration statements for securities, tax returns, or security clearances. The exception does not, however, permit a former employee to submit pleadings, applications, or other documents in a representational capacity on behalf of another merely because the attorney or other representative must sign the documents under oath or penalty of perjury.

Sec. 200.735–126. Administrative enforcement proceedings.

The following are basic guidelines for administrative enforcement of restrictions on postemployment activities:

(a) *Initiation of administrative disciplinary hearing.*—(1) On receipt of information regarding a possible violation of 18 U.S.C. 207, and after determining that such information does not appear to be frivolous, the chairman shall expeditiously provide such information, along with any comments or agency regulations, to the Director and to the Criminal Division, Department of Justice. Any investigation or administrative action will be coordinated with the Department of Justice to avoid prejudicing criminal proceedings, unless the Department of Justice informs the Commission that it does not intend to initiate criminal prosecution.

(2) Whenever the chairman has determined after appropriate review that there is reasonable cause to believe that a former Commission employee has violated 18 U.S.C. 207 (a), (b), or (c) or implementing regulations of the Office of Government Ethics (5 CFR part 737), he or she shall initiate an administrative disciplinary proceeding by providing the former Commission employee with notice as defined in subsection (b).

(3) The chairman shall take all necessary steps to protect the privacy of former employees prior to a determination of sufficient cause to initiate an administrative disciplinary hearing.

(b) *Notice.*—(1) The chairman shall provide the former Commission employee with notice of an administrative disciplinary proceeding and an opportunity for a hearing.

(2) Notice to the former Commission employee must include—

(i) A statement of allegations and the basis thereof in detail sufficient to enable the former Commission employee to prepare an adequate defense;

(ii) Notification of the right to a hearing;

(iii) An explanation of the method by which a hearing may be requested; and

(iv) A copy of this subpart.

(c) *Examiner.*—(1) The presiding official at proceedings under this subpart shall be an individual to whom the chairman has delegated authority to make a recommended determination (hereinafter referred to as examiner).

(2) An examiner shall be an experienced government attorney of high moral character and sound judgment.

(3) An examiner shall be impartial. No individual who has participated in any manner in the decision to initiate the proceedings may serve as an examiner in those proceedings.

(d) *Scheduling of hearing.*—In setting a hearing date, the examiner shall give due regard to the former Commission employee's need for—

(i) Adequate time to prepare a defense properly, and

(ii) An expeditious resolution of allegations that may be damaging to his or her reputation.

(e) *Hearing rights.*—A hearing shall include, at a minimum, the following rights:

(1) To be represented by counsel,

(2) To introduce and examine witnesses and to submit physical evidence,

(3) To confront and cross-examine adverse witnesses,

(4) To present oral argument; and

(5) To obtain a transcript or recording of the proceeding on request.

(f) *Burden of proof.*—In any hearing under this subpart the Commission has the burden of proof and must establish a violation by clear and convincing evidence. The case of the Commission shall be presented by the Office of the General Counsel.

(g) *Recommended determination.*—(1) The examiner shall make a recommended determination exclusively on matters of record in the proceeding and shall set forth therein all findings of fact and conclusions of law relevant to the matters at issue. The recommended determination shall be delivered to the parties.

(2) Within 10 days of the date of receipt of the recommended determination, either party may submit to the chairman exceptions to the recommended determination and alternative findings of fact and conclusions of law.

(h) *Final administrative decision.*—(1) Within 40 days of the date of the recommended determination, the chairman shall make a final administrative decision based solely on the record of the proceedings.

(2) In the event that no hearing is requested, the chairman shall make a final administrative decision within 40 days of the date notice is provided to the former employee and the record of the proceedings shall consist of the statement of allegations as defined in subsection (b)(2)(i) and whatever written response the former employee shall provide.

(3) The chairman shall specify in the final administrative decision the findings of fact and conclusions of law that differ from the recommended determination of the hearing examiner.

(i) *Administrative sanctions.*—The chairman may take appropriate

action in the case of any individual who is found in violation of 18 U.S.C. 207 (a), (b), or (c) or implementing regulations of the Office of Government Ethics (5 CFR part 737) after a final administrative decision by—

(1) Prohibiting the individual from making, on behalf of any other person (except the United States), any formal or informal appearance before, or, with the intent to influence, any oral or written communication to, the Commission on any matter of business for a period not to exceed 5 years. This prohibition may be enforced by directing Commission employees to refuse to participate in any such appearance or to accept any such communication;

(2) Taking other appropriate disciplinary action.

(j) *Judicial review.*—Any person found to have participated in a violation of 18 U.S.C. 207 (a), (b), or (c) or these regulations may seek judicial review of the administrative determination. Review shall be before the appropriate U.S. district court.

By order of the Commission.

Issued: May 9, 1980.

KENNETH R. MASON,
Secretary.

In the Matter of CERTAIN INCLINED-FIELD ACCELERATION TUBES AND COMPONENTS THEREFOR	Investigation No. 337-TA-67

Notice of Prehearing Conference and Hearing

Notice is hereby given that a prehearing conference will be held in this case at 9 a.m., on June 6, 1980, in the Dodge Center, second floor, 1010 Wisconsin Avenue NW., Washington, D.C. The purpose of this prehearing conference is to review the trial memoranda submitted by the parties, to stipulate into the record as many exhibits as possible, and to discuss any questions raised by the parties relating to the hearing.

Notice is also given that the hearing in this proceeding will commence at 9 a.m., on June 16, 1980, in the Dodge Center, second floor, 1010 Wisconsin Avenue NW., Washington, D.C.

The Secretary shall publish this notice in the Federal Register.

Issued: May 8, 1980.

JANET D. SAXON,
Administrative Law Judge.

Index

U.S. Customs Service

Treasury decisions: T.D. No.

Customhouse Broker's License:

Cancellation 80–134

Cancellation 80–135

Cancellation 80–136

Cab chassis, imported lightweight; change of practice 80–137

Transfer of antidumping and countervailing duty functions from Department of the Treasury to Department of Commerce 80–133

Foreign Currencies:

Daily certified rates; April 21–25, 1980 80–138

Daily certified rates; April 28–May 2, 1980 80–139

Rates which varied from quarterly rate; week of April 21–25, 1980 80–140

Rates which varied from quarterly rate; week of April 28–May 2, 1980 80–141

Customs Service Decisions: C.S.D. No.

Aircraft: Foreign clearance; scheduled versus nonscheduled flights 80–60

Bonds:

Use of general term bond by broker importing for own account 80–54

Return of cash deposited in lieu of surety; bonding of imported automobile to insure compliance with EPA requirements 80–69

Application of 19 CFR 113.14(g)(1)(ii) in immediate delivery situations 80–72

Brokers: May a third party maintain the importer's records required to be kept by Public Law 95–410 80–66

Carrier control: Whether a foreign-flag vessel may engage in salvage and removel of drilling rig located above the Outer Continental Shelf 80–61

Classification: Actual use provision; substitution; C.S.D. 80–1 modified 80–70

Conditionally free merchandise: Foreign-made tools of trade 80–75

Drawback:

Manufacture or production defined; 19 U.S.C. 1313 80–58

Obligation to keep required records; section 22.4(g), Customs Regulations 80–63

Destruction of foreign trade zone restricted merchandise for drawback purposes 80–67

Distribution of drawback among products resulting from manipulation of imported merchandise 80–68

19 U.S.C. 1313(c) Reliquidation claim based on delay by Customs 80–73

Duty assessment:

When an IIT is entitled to duty-free entry 80–62

Reimportation of duty-paid merchandise exported in error; nonexportation, nonimportation principle 80–74

Entry:
Merchandise appearing on a single invoice when different dates of exportation are involved 80–51
Maintenance of import records by importer 80–56
Manipulation in banded warehouses: Cutting woolen neckwear into scrap 80–64
Country of origin marking:
Bookmatches 80–52
Watch dials designed to be blank 80–53
Words "made in/fait a" when the marking is in close proximity to U.S. placename 80–57
Travelers checks 80–59
Powers of attorney: When powers of attorney are necessary in order for a corporate employee to sign Customs forms 80–71
Prohibited and restricted importations whether a mark appearing on imported sportswear is confusingly similar to a registered trademark 80–65
Vessel entrance: Whether foreign-flag fishing vessels have "arrived in distress" when foreign countries have refused them permission to land their catch 80–55

Customs Court

Acetone, C.R.D. 80–4
Construction:
Rules of U.S. Customs Court:
Rule 4.7(b), C.R.D. 80–4
Rule 8.2, C.R.D. 80–4
Tariff Act of 1930, sec. 520(c)(1), C.R.D. 80–4
Cross-motions for summary judgment, C.R.D. 80–4
Crude wax, C.R.D. 80–4
Drawback:
Petroleum products, C.R.D. 80–4
Timeliness of claim, C.R.D. 80–4
Judgment in appealed case (p.—):
Appeal 79–19—Cotton canvas shoe uppers; arch stitching; cotton articles, ornamented; cotton articles, not ornamented; TSUS
Jurisdiction, lack of; motion to dismiss, C.R.D. 80–4
Lack of jurisdiction; motion to dismiss, C.R.D. 80–4
Liquidate, refusal to, C.R.D. 80–4
Motion:
For summary judgment, C.R.D. 80–4
To dismiss:
Jurisdiction, lack of, C.R.D. 80–4
Lack of jurisdiction, C.R.D. 80–4
Petroleum products; drawback, C.R.D. 80–4
Refusal to reliquidate, C.R.D. 80–4
Summary judgment:
Cross-motion for, C.R.D. 80–4
Motion for, C.R.D. 80–4
Timeliness of claim; drawback, C.R.D. 80–4
Wax, crude, C.R.D. 80–4

JUN 12 1980 Item 950-D T1.11/3:14/24
Cont'd

Customs Bulletin

Regulations, Rulings, Decisions, and Notices concerning Customs and related matters

and Decisions

of the United States Court of Customs and Patent Appeals and the United States Customs Court

320.979
377

Vol. 14 JUNE 11, 1980 No. 24

9247

This issue contains

T.D. 80–141 through 80–146
ERRATUM
C.D. 4855 and 4856
Protest abstracts P80/71 and P80/72
Reap. abstracts R80/157 through R80/162
International Trade Commission Notice

THE DEPARTMENT OF THE TREASURY
U.S. Customs Service

NOTICE

The abstracts, rulings, and notices which are issued weekly by the U.S. Customs Service are subject to correction for typographical or other printing errors. Users may notify the U.S. Customs Service, Logistics Management Division, Washington, D.C. 20229, of any such errors in order that corrections may be made before the bound volumes are published.

For sale by the Superintendent of Documents, U.S. Government Printing Office, Washington, D.C. 20402. Price: $2.25 (single copy domestic); $2.85 (single copy foreign). Subscription price: $85.00 a year domestic; $106.25 a year foreign.

U.S. Customs Service

Treasury Decisions

(T.D. 80-141)

Customhouse Cartman License—Revocation

Revocation of Customhouse Cartman's license No. 26 issued by the District Director of Customs, New Orleans, La., to Warren G. Diaz, Sr.

Notice is hereby given that on May 12, 1980, pursuant to the provisions of section 565, Tariff Act of 1930, as amended, and section 112.30 of the Customs Regulations (19 CFR 112.30), it was decided that Customhouse Cartman's license No. 26 issued in the District of New Orleans on June 2, 1975, to Warren G. Diaz, Sr., be revoked. This revocation is effective as of May 12, 1980.

WILLIAM T. ARCHEY,
Acting Commissioner of Customs.

[Published in the Federal Register April 30, 1980 (45 FR 36575)]

(T.D. 80-142)

Imports of Petroleum and Petroleum Products; Customs Regulations Amended

Amendments to the Customs Regulations relating to imported petroleum and petroleum products and public gaugers; parts 4, 144, 151, and 159, Customs Regulations, amended

TITLE 19—CUSTOMS DUTIES

CHAPTER I—U.S. CUSTOMS SERVICE

PART 4—VESSELS IN FOREIGN AND DOMESTIC TRADES

PART 144—WAREHOUSE AND REWAREHOUSE ENTRIES AND WITHDRAWALS

PART 151—EXAMINATION, SAMPLING, AND TESTING OF MERCHANDISE

PART 159—LIQUIDATION OF DUTIES

AGENCY: U.S. Customs Service, Department of the Treasury.
ACTION: Final rule.

SUMMARY: This document amends the Customs Regulations relating to imported petroleum and petroleum products to incorporate recommendations of a Customs petroleum imports task force for establishing standardized guidelines and procedures, including the use of public gaugers, for monitoring imports of petroleum and petroleum products. These amendments are being made to insure proper control of imported petroleum and petroleum products and uniform, complete, and reliable statistics relating to the importation of these products. The amendments to the regulations are considered to be significant.

EFFECTIVE DATE: (30 days from the date of publication in the Federal Register.)

FOR FURTHER INFORMATION CONTACT: Alice M. Rigdon, Cargo Processing Division, Office of Inspection, U.S. Customs Service, 1301 Constitution Avenue NW., Washington, D.C. 20229; 202-566-5354.

SUPPLEMENTARY INFORMATION:

BACKGROUND

Controls and checks on the unlading and shore tank gauging of imported petroleum and petroleum products now are established by each district director of Customs under section 151.42, Customs Regulations (19 CFR 151.42). Depending on local conditions, the district director may employ any of the following methods of control:

(a) Complete and continuous supervision by a Customs officer when other methods are not considered adequate, or when the importer requests continuous supervision;

(b) Use of reports of public gaugers approved by the Commissioner of Customs in accordance with section 151.43, Customs Regulations (19 CFR 151.43);

(c) Use of positive displacement meters at installations where provided by the importer;

(d) Use of turbine-type meters at installations where provided by the importer;

(e) Sealing of all valves when practical; or

(f) Taking of vessel ullages before and after the discharge.

To insure proper control of imported petroleum and petroleum products and uniform, complete, and reliable statistics relating to the importation of these products, a Customs petroleum imports task force was established to survey operations at selected Customs field locations and to formulate proposals to achieve these goals.

Survey teams conducted studies from July 2–20, 1979, in the 10 locations through which most petroleum and petroleum products imported into the United States are entered. The teams "* * * found

that, in general, the Customs Service was providing proper controls and reporting reliable statistics." However, it was also discovered that "* * * there were isolated instances of insufficient controls and that the Customs Service was lacking in standardized national procedures and guidelines for various aspects of imported petroleum." Therefore, it was determined to be in the national interest, in light of the present energy situation, to develop standardized guidelines for processing petroleum and petroleum product importations.

On the basis of task force recommendations, and in accordance with Customs intent to maintain a permanent oversight function in regard to petroleum imports to insure continued control in this vital area, the Customs Service published a notice in the Federal Register on November 7, 1979 (44 F.R. 64434), proposing to amend the Customs Regulations to establish standardized guidelines and procedures applicable to the appropriate methods of control and the use of public gaugers in monitoring imports of petroleum and petroleum products. These guidelines were similar to Customs procedures followed in most locations. Significant changes emphasize uniformity throughout Customs and tighter control through increased supervision of various gauging procedures, including controls on the use of public gaugers.

The notice invited interested persons to submit comments on or before December 7, 1979. At the request of an industry trade association, the period of time for the submission of comments was extended until December 14, 1979, by a notice published in the Federal Register on November 21, 1979 (44 F.R. 66835).

In response to the notices, 17 comments were received from corporations, cooperatives, industry representatives, refiners, and others. In addition, in accordance with requests from certain commenters for further discussion of the proposals prior to the issuance of a final rule, pursuant to a notice published in the Federal Register on December 21, 1979 (44 F.R. 75635), Customs held an open conference on January 8, 1980, for the discussion and clarification of the issues raised in the comments. Approximately 45 individuals representing various interested parties attended. Specific proposals were discussed, the Customs position on each was explained, and areas of misunderstanding were clarified.

SUMMARY OF MAJOR CHANGES IN EXISTING REGULATIONS

1. Section 4.12 requires that manifest shortages and overages be reported to the district director. However, it does not state how great the discrepancy must be before a report is mandatory for bulk importations. Customs proposed that discrepancies exceeding 1 percent between the manifested quantity and the gross quantity unladen be reported on Customs form 5931, signed by both the carrier and the

importer, and that penalties otherwise provided by law be imposed if the required notification and explanation were not filed timely, or if the reasons for the discrepancy was not satisfactorily explained.

This proposal has been adopted and modified to delete the requirement that Customs form 5931 be signed by both the carrier and the importer.

2. Sections 151.41 and 151.45(c) permit importers to estimate the amount of petroleum and petroleum products to be unladen for entry or withdrawal from bonded tanks if the exact quantity cannot be determined in advance. In order to obtain more accurate statistics regarding these imports, Customs proposed that this estimate not vary by more than 1 percent from the gross quantity unladen and that penalities otherwise provided by law be imposed if the required notification and explanation were not filed timely, or if the reason for the discrepancy was not satisfactorily explained.

This proposal has been adopted with the modification that the estimate may vary by 3 percent.

3. Section 151.42 provides that each district director shall establish controls and checks on the unlading and shore tank gauging of petroleum and petroleum products imported by vessel. Customs proposed to amend section 151.42 to include imports by truck, railroad car, pipeline, or other carrier.

This proposal has been adopted without modification.

Section 151.42 also permits the district director to exercise discretion in determining which methods of control to use in the unlading and gauging of petroleum and petroleum products. Customs proposed that this section be amended to state that, where possible, two methods of control shall be used.

This proposal has been adopted. Accordingly, for control purposes, both shore measurements (sec. 151.42 (a)(1)) and vessel ullages (sec. 151.42 (a)(2)) shall be taken. For purposes of determining the gross quantity unladen shore measurements will be used. Vessel ullages will not be used to determine the gross quantity unladen unless none of the methods of shore measurement are available or adequate.

At the suggestion of one commenter, weighing of trucks and railroad cars has been added as a method of control.

Consistent with an existing requirement that meters used in gauging petroleum and petroleum products be approved by Customs, it was proposed to amend sections 151.42 (c) and (d) to provide that positive displacement meters and turbine-type meters used as methods of control in gauging petroleum and petroleum products must be of a type approved by Customs.

This proposal has been adopted without modification.

It was proposed further to amend section 151.42 to provide that

Customs officers would perform or witness: (1) Opening ullages of carriers; (2) closing ullages of all carriers which have not completely discharged cargo, or if an importer or carrier requests Customs to witness closing ullages due to special problems; (3) shore tank gauges performed by company or related party employees; (4) between 5 and 10 percent of shore tank gauges conducted by public gaugers; and (5) shore tank gauges, including those conducted by a public gauger, where no carrier ullages are taken. Because the sealing of valves is not a complete method of measurement and control, it was proposed to delete section 151.42(e), which refers to this method. Sealing of valves would continue to be used in shore tank gauging to the extent that it is safe and practicable.

These proposals have been adopted without modification.

Customs also proposed to add a new subsection to section 151.42. The new subsection would require the reporting of discrepancies in manifests of petroleum and petroleum products imported by truck, railroad car, pipeline, or other carrier, if the discrepancy exceeds 1 percent.

This proposal has been adopted without modification.

4. Section 151.43(a) provides that the acceptance of public gauger quantity reports of imported petroleum and petroleum products is discretionary with the district director. Customs proposed to amend this section to permit acceptance of these reports for shore tank gauging and closing carrier ullages if Customs independently employed, as a second method of control, one of the other methods described in section 151.42(a), and there was no evidence that the public gauger failed to comply with the provisions of part 151, subpart C, Customs Regulations.

This proposal has been adopted. Therefore, Customs will accept public gaugers reports only when it has independently performed or witnessed opening and closing carrier ullages as prescribed in section 151.42(b).

5. Section 151.43(b) provides that in applying for Customs public gauger approval, an applicant must agree to avoid conflict-of-interest situations. In its notice of proposed rulemaking, Customs proposed to amend section 151.43(b) to require approved public gaugers to notify the Commissioner in writing within 60 days of any change of name, address of principal place of business, ownership, or financial condition, or, if a corporation, of any change in its articles of incorporation, officers, directors, or parent-subsidiary relationship.

It also was proposed that public gaugers be required to notify Customs of any (1) effort to influence or otherwise impede the performance of their duties in connection with proper gauging of petroleum or petroleum products, or (2) attempt to coerce them fraudulently

to change or falsify records maintained by them in the course of their employment.

Both of these proposals have been adopted without modification.

6. Section 151.43(d) provides that a public gauger's Customs approval may be revoked for failure to comply with the provisions of that section but does not provide for the imposition of any other sanction. Customs proposed to amend this section to permit it to suspend approval or to assess liquidated damages under the public gauger bond described in section 113.13(b), Customs Regulations (19 CFR 113.13(b)).

This proposal has been adopted without modification.

7. Section 151.43(e)(1) provides that to be approved by Customs, all measuring and testing devices in use in a public gauger's operation shall be maintained in first-class condition. To clarify that sampling devices also are covered, it was proposed to amend section 151.43(e)(1) to include sampling devices with measuring and testing devices.

This proposal has been adopted without modification.

8. Section 151.43(e)(3) requires that as a condition of approval, public gaugers authorized to sign gauging reports must have a minimum of 6 months on-the-job training and experience. In the notice of proposed rulemaking, Customs proposed to amend section 151.43 (e)(3) to require that public gaugers provide Customs with written certification of their training and experience.

This proposal has been adopted with the modification that each public gauger and each other person authorized to sign gauging reports shall furnish the required information.

9. The regulations do not require that a public gauger maintain records for Customs inspection pertaining to the measurement, gauging, testing, or sampling of imported petroleum or petroleum products performed in the course of his employment, nor for Customs verification of any records kept by him in the normal course of business. It was proposed to add new subsections (g) and (h) to section 151.43, establishing a recordkeeping requirement for public gaugers and providing a procedure for verification of these records by Customs.

This proposal has been adopted without modification.

10. Part 151, subpart C, provides that Customs approval of a public gauger may be revoked for failure to comply with any of the provisions of that subpart. However, it is silent as to the public gauger's rights in such situations. Customs proposed to add a new subsection (i) to section 151.43, to provide an approved public gauger with due process before any revocation or suspension of his approval by Customs.

This proposal has been adopted without modification.

11. It was proposed to add a new subsection (j) to section 151.43 to state that in addition to (1) any penalty otherwise provided by law which may be incurred for failure to comply with the provisions of part 151, subpart C, or (2) any sanction which may be imposed against a public gauger approved by Customs under the provisions of that subpart, a monetary penalty also may be assessed under section 592, Tariff Act of 1930, as amended (19 U.S.C. 1592), if appropriate.

This proposal has been adopted without modification.

12. Section 151.44(c) provides that whenever practicable, the district director may require that the measurements and calibrations shown on the gauge tables of petroleum storage tanks be verified by a Customs officer. Because a district director may deem verification necessary at a time when no qualified Customs officer is available, it was proposed to amend this section to permit the district director to accept an independent certification verifying these measurements and calibrations. The independent verification would be performed at the expense of the storage tank proprietor.

This proposal has been adopted with the modification that the district director may require verification of the measurements and calibrations shown on the gauge tables of petroleum tanks whenever he has reason to suspect their reliability, instead of whenever practicable.

DISCUSSION OF COMMENTS

A majority of the commenters endorse, in principle, Customs proposals to insure proper control of imported petroleum and petroleum products, to provide uniform, complete, and reliable statistics relative to the importation of these products, and to establish standardized guidelines applicable to the use of public gaugers for monitoring imports of petroleum and petroleum products. They are generally of the opinion that these guidelines will improve the reliability of public gaugers; promote greater uniformity and accuracy in the measurement of imported petroleum and petroleum products; insure proper control of imported petroleum and petroleum products; insure the availability of uniform, complete, and reliable statistics regarding these imports; and simplify the international transportation of petroleum and petroleum products.

However, the commenters criticized the proposals as inadequate, vague, too restrictive, and likely to increase both expenses and the burden of documentation for importers and Customs, which possibly could thwart the collection of accurate statistics, and increase discrepancies for which importers would be penalized unfairly.

The specific comments are as follows:

I. Discrepancies

A. Reporting of 1-percent discrepancy

Fourteen commenters object to Customs proposal that discrepancies exceeding 1 percent between manifested and unladed quantities shall be reported on Customs form 5931 and that penalties otherwise provided by law may be incurred automatically if the discrepancy exceeds 1 percent. A number of commenters believe that the 1-percent figure is too restrictive and suggest allowances ranging from 1.5 to 5 percent. Other commenters oppose the imposition of any reporting requirement. In their objections, the commenters state that the reporting of manifest discrepancies is impracticable because:

(1) Using at least two methods of measurement, one of which might be ullaging, may in itself guarantee discrepancies exceeding 1 percent;

(2) Discrepancies may result from factors beyond the control of the carrier or the importer, such as physical losses, temperature deviation, cargo remaining on board, measurement errors at either the loading or receiving port, inconsistent operations in foreign ports, vessel ullages taken at sea, and variables associated with pipelines;

(3) Other factors, such as imprecise gauge tables, and the presence of suspended water and sediment, may increase the likelihood of discrepancies; and

(4) Problems associated with split entries and the use of lightering vessels introduce variables in the determination and measurement of cargo which also may result in discrepancies.

The commenters contend that, for these reasons, the imposition of a penalty in every case in which a manifest discrepancy exceeds 1 percent would be unreasonable.

The addition of proposed paragraph (c) to section 4.12, Customs Regulations (19 CFR 4.12), does not change materially the requirement that a vessel master or agent is responsible for explaining manifest overages and shortages, but is a restatement of a longstanding Customs practice. Under the proposed amendments, the master or agent would manifest all cargo on board to be imported. The manifested quantity (gross quantity on board and to be unladen) would be compared to the gross quantity actually unladen, as determined in accordance with sections 151.42(a) and 151.43(a). If there is a discrepancy in excess of 1 percent between the two figures, the master or agent would be required to file a report on Customs form 5931 in accordance with section 4.12 (a)(2) or (a)(3). It is not intended that a penalty will be imposed automatically if the discrepancy exceeds 1 percent. However, if the required notification and explanation are

not filed timely, or if the reason for the discrepancy is not satisfactorily explained, an appropriate penalty will be imposed.

The net quantity unladen (the gross quantity unladen adjusted for excessive water and sediment) is the quantity which will be used for entry, licensing, and statistical purposes.

Because Customs recognizes that factors beyond the master's control may contribute to discrepancies, a 1-percent variable has been provided. The manifest is prepared by the vessel master and may be amended at any time before unlading. Accordingly, before unlading, the master may correct the manifest to take into account any variables of which he is aware. This may include correcting the manifest to reflect opening vessel ullages.

Customs has found that in those locations where vessel masters or agents now are required to report discrepancies exceeding 1 percent, no discrepancy reports were necessary in approximately 95 percent of the transactions.

B. Explanation of manifest discrepancies

Six commenters submit observations regarding Customs proposals to require discrepancy reports.

One commenter suggests that because there are reasons other than absorption of moisture, temperature, and faulty weighing at the port of lading, listed in section 4.12(a)(5)(b), which may account for discrepancies between the manifested quantity and the gross quantity unladen, the word "explainable" should be substituted for the word "similar" in the provision "* * * a correction in the manifest shall not be required in the case of bulk merchandise if the district director is satisfied that the difference between the manifested quantity and the quantity unladen is an ordinary and usual difference properly attributable to absorption of moisture, temperature, faulty weighing at the port of lading, or other similar reason."

Another commenter suggests that a correction of the manifest should not be required if discrepancies between the manifested quantity and the quantity unladen can be explained. Other commenters state that references to discrepancies of manifested entered quantities should be more specific as to which method of quantity determination shall be used and that the terms used be more specifically defined. One commenter also notes that carriers other than vessels, such as rail carriers, often are transient, and furnishing a report signed by both the carrier and the importer within 60 days of entry would be difficult.

Customs did not propose any changes to section 4.12(a)(5)(6) and believes that it is inappropriate to amend that section at this time. The section as written is sufficiently broad to take account of factors

other than moisture absorption, temperature, and faulty weighing, which may contribute to discrepancies between quantities which are manifested and which are unladen.

The amendments to the Customs Regulations were proposed to insure proper control of imported petroleum and petroleum products, and uniform, complete, and reliable statistics relating to the importation of these products. To carry out these purposes, proper carrier controls must be maintained. Accordingly, Customs is of the opinion that the provision requiring the correction of vessel manifests if there is a discrepancy of more than 1 percent between the manifested quantity and the gross quantity unladen is warranted.

As previously noted, vessel manifests may be amended at any time before unlading. Discrepancies will not be determined by comparing the entered quantity to the quantity unladen, but by comparing the quantity manifested to the quantity unladen, with both figures corrected to the same temperature coefficient—60° F.

Customs experience with rail carriers confirms that they are able to submit discrepancy reports within the 60 days provided. However, after further consideration, Customs has determined that it is unnecessary to require that manifest discrepancies reported on Customs form 5931 be signed by both the carrier and the importer. Accordingly, the requirement has been deleted from proposed section 4.12(c).

II. Methods of Measurement

A. Ullages

Six commenters object to Customs proposal to use vessel ullages as a method of measurement. The commenters contend that the taking of vessel ullages is not a reliable basis for import reporting because it fails to take into account factors such as clingage, remains on board, the tank washing policy, differences in temperature above and below the waterline, and the inherent ship versus shore measurement bias. It is suggested that ullage measurements be regarded only as an indication that a discrepancy may exist and not as a method for establishing a discrepancy for the purposes of imposing a penalty.

Customs agrees that vessel ullages are not the most accurate method of measuring the quantity unladen. The ullaged figure will not be used to determine quantity unladen for reporting purposes unless no other method of measurement is available or adequate. Nevertheless, vessel ullages shall be taken in every case unless the district director determines that it is unsafe to do so, or because technological factors, such as the presence of inert gas systems, prevent doing so. Customs intends to use the ullaged figure as an indication of the accuracy of the quantity manifested so as to afford the vessel master an opportunity to amend the manifest if a comparison between the quantity

manifested and the ullaged figure shows a variance. Customs also will use the ullaged figures as an indication of the accuracy of shore metering and shore tank calibrations.

B. Meters

Four commenters address the proposal that positive displacement and turbine type meters used as methods of measurement be of a type approved by Customs. Two commenters suggest that applicable industry standards be used by Customs as criteria for approval of these meters. One commenter cautions that, in certain circumstances, meters may provide inaccurate measurements and suggests that gauging would be the most reliable means for measuring petroleum and petroleum products. Another commenter states that it is unnecessary for Customs to approve these meters, but if Customs chooses to do so, it should be required to provide approval within a specified timeframe (i.e., 15 days) after the importer has requested approval.

Customs traditionally has used accepted industry standards in approving meters and intends to continue this practice. Experience has shown that Customs approved meters are generally as accurate or more accurate than gauging as a method of measurement. Furthermore, Customs may compare manifested quantities and quantities determined by opening ullages to metered quantities as an indication of the accuracy of the meter.

It is, and will continue to be, Customs policy to approve meters as rapidly as possible. Customs recognizes the need for timely approval of these devices and does not intend to inconvenience operators unnecessarily. However, Customs is of the opinion that it would be unduly restrictive to include a time constraint in the regulations.

C. Use of two methods of measurement

Two commenters object to the proposal that, if possible, Customs use two methods of measurement to report imported petroleum and petroleum products. They state that there is no technical basis for assuming that the use of two equivalent measurement systems will give a more accurate reading than the use of one, that such use is expensive and redundant, will not increase the uniformity of controls, and only will generate an additional set of figures, thus creating an area of dispute.

Customs does not intend to use either an average or a combination of both figures for reporting purposes. The figure derived from the shore measurement will be the gross quantity unladen and ordinarily will be the basis for determining the net quantity unladen. The net quantity unladen, as determined by Customs, is the quantity used for entry, licensing, and statistical purposes in each case, whether or not there is a discrepancy between the quantity manifested and the gross quantity

unladen. However, if shore measurements are unavailable or inadequate, Customs then will use vessel ullages to determine the gross quantity unladen.

Proposed section 151.42 has been modified to reflect this change.

D. Sealing of valves

Three commenters oppose Customs proposal to eliminate sealing of valves as a method of control. One of the commenters states that although the sealing of valves is not a method of measurement, it is an effective means of controlling the flow of products into the measuring facility and that elimination of this method of control would remove a deterrent to both the intentional or inadvertent diversion of the product. Another commenter is concerned that eliminating the use of sealing of valves implies that segregation of a receiving system by installation of blinds will be required, and that such a system would hinder normal terminal operations, especially lube oil operations.

Customs recognizes that the sealing of valves is an effective means of controlling the flow of products into measuring facilities. However, used alone, it is not a complete method of measurement. Accordingly, the sealing of valves has been deleted from the methods of measurement in proposed section 151.42(a)(1). However, sealing of valves shall continue as part of shore tank gauging to the extent safe and practicable.

Because the sealing of valves may be used in conjunction with the methods of measurement listed in section 151.42(a)(1), Customs does not anticipate that eliminating sealing of valves as a method of control will require the segregation of receiving systems by installing blinds.

E. Other

Additional commenters express reservations concerning use of the other methods of measurement proposed by Customs.

One commenter states that although Customs has set forth four methods of measurement which may be used in measuring imports of petroleum and petroleum products, it has not specified which shall be the ruling one for Customs out-turn, license decrementation, and liquidation. The commenter suggests that the methods be given a rated priority of preference.

A second commenter recommends that only Customs inspectors perform ullaging and gauging. A third commenter notes that the only method of measurement discussed in the proposal is liquid gallons, but that many petroleum products, such as natural gas, greases, and waxes, are measured otherwise than in liquid gallons, and that weighing, an effective method for measuring the content of tank trucks and railroad cars, is not designated as a method of measurement.

Another commenter states that the shore tank gauge reading should

be the only figure used for the determination of exact quantity discharged for statistical purposes and duty assessment where a partial quantity of a vessel's cargo is discharged at a particular port, and that a "bone dry certificate" from an independent surveyor should be required to determine that all of the material on board has been discharged in those instances where the vessel discharges all of the cargo on board.

One commenter suggests that specific procedures (e.g., frequency of audits or rotation of times that audits will be conducted) should be developed stating when the 5 to 10 percent of shore tank gauges conducted by public gaugers would be performed or witnessed by Customs.

One commenter states that with regard to stream-boarding of vessels, the decision whether or not to stream-board should be made by the individual inspector, not the district director.

As previously stated, Customs intends to employ only one method of measurement (other than ullaging) to determine the gross quantity unladen. Customs does not believe that one method of shore measurement should be given preference over another because each port has different facilities, and a method used efficiently at one port may not be appropriate for use at another.

Because other Customs officers, such as warehouse officers, also may perform ullaging and gauging, Customs does not intend to authorize only inspectors to perform this function.

Although the measurement quantities discussed in the proposal included, but were not limited to, liquid gallons, the methods of control do not specify that measurements must be made in liquid gallons. It is Customs practice to measure merchandise in quantity units appropriate to each commodity.

Customs agrees that the weighing of tank trucks and railcars is an effective measure and has determined to include it as a method of measurement in proposed section 151.42(a)(1), which has been modified accordingly.

The net amount unladen is the amount to be used for entry, licensing, and statistical purposes. Customs does not require a bone-dry certificate because the burden is on the master to account for the entire cargo of the vessel whether or not the entire cargo is discharged at any particular port.

Specific procedures governing when the 5 to 10 percent of shore tank gauges conducted by public gaugers will be performed or witnessed by Customs have been developed. In addition, Customs intends to insure the reliability and integrity of public gauger reports by random audits and by random onsite verification of quantities measured.

The Customs position, incorporated in an internal directive referencing safety problems, has been to allow each boarding officer

to determine at the time of boarding whether or not it is safe to board a vessel in stream. This policy remains in effect. Customs does not intend to jeopardize the health and safety of its employees by requiring them to stream-board vessels under hazardous conditions.

III. Deduction for Basic Sediment and Water (BS&W)

Although the notice of proposed rulemaking did not address the subject, six commenters suggest that Customs amend the existing allowances for BS&W in suspension in imported petroleum and petroleum products.

Customs is amendable to suggestions and discussions leading to review of its BS&W claims policy. However, because no changes in existing policy were proposed in the notice, further consideration of comments regarding BS&W claims policy at this time is inappropriate.

IV. Public Gaugers

Seven commenters respond to Customs proposals regarding public gaugers.

Two commenters note that while Customs proposes to require that public gaugers maintain automatic sampling devices in first-class condition, these devices normally are fixed shore installations owned and operated by the terminal operator, who is responsible for their maintenance. They suggest that gaugers be required to determine only that these devices be in first-class condition.

One commenter recommends that a system for the verification of selected entries be instituted and that Customs investigate both public gaugers requesting Customs approval and gaugers who previously have been approved.

Another commenter suggests that the proposed amendments also provide for Customs approval of company-employed gaugers.

Two commenters note that while Customs would require each public gauger authorized to sign gauging reports to furnish Customs with a written certification that he has a minimum of 6 months on-the-job training and experience, there is no requirement that the person doing the gauging provide such certification. The commenter recommends that each gauger certified by Customs be required to carry identification stating that he is certified to perform gauging at any port his employer may send him.

One commenter questions whether, as part of Customs record-keeping proposal, public gaugers must keep physical samples for a period of 5 years. The commenter suggests that maintaining these samples for 6 months or until liquidation of the entry would be sufficient.

One commenter is of the opinion that the provision that the Customs

Office of Investigations shall investigate a gauger's fitness and reputation and verify the correctness of the statements made in his application at the direction of the Commissioner, as he deems necessary, vests too much discretion in the Commissioner. The commenter suggests that the provision should be modified to delete the section granting the Commissioner discretion in this situation.

One commenter suggests that if Customs exercises its discretion not to accept reports of public gaugers in certain situations, the volumes recorded for imports by a company and by Customs may vary. The company would employ an independent gauger to determine the discharged volume for accounting and reporting purposes, while Customs might record a different volume.

It has been Customs policy to require that gaugers maintain all of their measuring and testing equipment in first-class condition. In the proposed regulations, sampling devices also were included. However, the word "automatic" was inserted inadvertently in the notice of proposed rulemaking. Proposed section 151.43(e)(1) is modified to correct this error.

It is assumed that in recommending that a system for the verification of selected entries be instituted, the commenter is suggesting that Customs establish a means for insuring the accuracy of public gaugers' reports. As previously noted, Customs intends to insure the reliability and integrity of public gauger reports by random audits and by random onsite verification of quantities measured.

All applicants who have received Customs approval previously have undergone Customs investigations to determine their fitness and reputation and to verify the correctness of the statements made in their applications. As set forth in section 151.43(c), this practice will be continued. Customs is of the opinion that reinvestigating all public gaugers previously approved would require an unnecessary expenditure of money and manpower. Further, a revised agreement in the form set out in proposed section 151.43(b)(5) will not be required of previously approved public gaugers. However, because the public gauger bond, posted by all previously approved public gaugers is conditioned that the public gauger " * * * shall perform in accordance with standards and procedures of gauging as required by the Customs Regulations * * *," approved public gaugers have a continuing obligation to comply with changes in the regulations. Accordingly, they will be required to comply with new requirements set forth in this document. These include: Conflict-of-interest requirements; recordkeeping requirements; the maintenance of sampling devices; and employee experience and training.

Customs does not agree that company employed gaugers also should be approved by Customs and that Customs should accept reports

320-979 O - 80 - 2

made by company gaugers. Because company gaugers are directly employed by the concern for which the gauging is performed, Customs is of the opinion that accepting reports from company gaugers is not a form of independent verification because it may place the company gauger in a conflict-of-interest situation.

Customs agrees that both persons authorized to sign gauging reports and persons performing gauging should have a minimum of 6 months on-the-job training and experience. Accordingly, proposed section 151.43(e)(3) has been modified to reflect this change.

Customs does not agree, however, that it would be beneficial to require that each Customs approved gauger carry identification stating that he is certified to perform gauging at any port where his employer may send him because gaugers may perform gauging only in the district(s) for which they are approved. The district director in each district will verify which gaugers are approved to perform gauging within that district.

Public gaugers are not required to retain physical samples for a period of 5 years. The length of time for retaining physical samples is discretionary with the gauger. Customs maintains its own samples for analysis in cases where questions arise.

Even though in the past the Commissioner has directed that each applicant for Customs public gauger approval be investigated, Customs agrees that an automatic investigation would be beneficial. Accordingly, section 151.43(c) is modified to require that, in all cases, an applicant's fitness and reputation shall be investigated, and the correctness of the statements made in his application shall be verified.

Although an importer may determine his own policy for computing the quantity unladen, the net quantity unladen, as determined by Customs, is the amount to be used for entry license control and statistical purposes. When there is a variance between the quantities recorded by the company and Customs, the quantity recorded by Customs will be used.

V. Foreign-Trade Zones

Two commenters note that procedures concerning the transfer into and out of, and the processing of petroleum within, foreign-trade zones are not addressed in the notice of proposed rulemaking. One suggests that foreign-trade zones be specifically exempt from the measuring requirements set forth in the notice. The other is of the opinion that operations in foreign-trade zones should be excluded from the proposed amendments except where these procedures can be applied effectively at the discretion of the district director.

The transfer of petroleum and petroleum products into and out of foreign-trade zones, and their processing within foreign-trade zones,

were not addressed specifically in the notice of proposed rulemaking because the admission, handling, and removal of foreign-trade zone merchandise is subject to the requirements of part 146, subpart D, Customs Regulations (19 CFR part 146, subpart D). However, the transfer of petroleum and petroleum products into and out of foreign-trade zones also is subject to the provisions of part 151, subpart C, Customs Regulations, as amended by this document.

VI. Quantities Unladen

Three commenters remark on Customs proposal to use the amount of petroleum and petroleum products actually unladen as the quantity imported for statistical purposes.

One commenter suggests that because it is the most nearly correct expression of petroleum imports, the net quantity unladen should be used for all statistical purposes. The commenter further states that the requirement that an independent commercial laboratory must be used to determine the quantity is nonproductive because receivers have extensive laboratory facilities for this purpose. This commenter suggests that Customs establish a method for insuring that laboratory tests by receivers are in accordance with ASTM/API standards and, therefore, acceptable. A second commenter states that the wording used in proposed section 151.47(a) for determining the net quantity of petroleum unladen should refer to the table in section 151.46, instead of sediment and water in excess of 0.3 percent, and that in determining the net quantity unladen, reference should be made to section 158.13 and the need to file Customs form 4315.

A third commenter is of the opinion that the parties responsible for securing and maintaining samples for testing in laboratories should be specified clearly to establish a chain of custody, and that a Customs laboratory should test all samples, including those tested in gaugers' laboratories.

As previously noted, the net quantity unladen is the amount which will be used for entry, licensing, and statistical purposes.

Customs does not agree that the provision in section 151.47(a) requiring that an independent commercial laboratory be used to determine the quantity should be changed at this time because it did not propose to change this requirement in the notice of proposed rulemaking. However, Customs would consider a request to change this provision at a later date.

Customs agrees that proposed section 151.47(a), the provision for determining the net quantity of petroleum unladen, should be expanded to refer to the table in section 151.46, instead of sediment and water in excess of 0.3 percent. Customs also agrees that in determining the net quantity unladen, reference should be made to section

158.13 and the need to file Customs form 4315. Proposed section 151.47(a) is modified accordingly.

Because when a claim is made, independent laboratory reports are verified by Customs laboratory tests using Customs own samples, Customs is of the opinion that it is not necessary to establish a chain of custody for samples tested in commercial laboratories.

Customs does not believe that it should routinely test all samples. To do so would not be cost effective. However, Customs now tests, and will continue to test, all samples subject to a claim filed on Customs form 4315.

VII. Storage Tanks

Four commenters address Customs proposals to amend sections 151.44 and 151.45, relating to storage tanks.

One commenter objects to the provision in proposed section 151.44 (c) that if no qualified Customs officer is available, the district director may accept an independent certification of the measurements and calibrations of storage tanks, performed at the expense of the storage tank proprietor. The commenter states that the provision should state more specifically when a verification is called for and what it is to consist of, and that Customs, not the proprietor, should bear the expense of an independent verification.

A second commenter states that Customs should require certification of carrier tanks when gauge tables are to be used for vessel ullages. Although Customs proposed no change to 151.45(b), a third commenter notes that although this section states that under certain circumstances, nonbounded petroleum may be required to be completely removed from bonded storage tanks, this is not practicable or possible in all situations and that some method of accommodation should be provided.

Another commenter states that if Customs discovers through independent survey that tanks do not contain accurate measurements and calibrations, and it can be proven that the tank proprietor was negligent in reporting suspected inaccuracies to Customs before the survey, a penalty should be assessed against the proprietor.

Customs agrees that proposed section 151.44(c) should state more specifically when verification is called for. Customs is of the opinion that the district director should have discretion to require verification of the measurements and calibrations shown on the gauge tables whenever he has reason to suspect their reliability. Proposed section 151.44(c) is modified accordingly.

Customs believes that it is justified in requiring that independent certification of the measurements and calibrations of storage tanks be performed at the expense of the storage tank operator when no Customs officer is available. The proper maintenance of storage tanks

and gauge tables is the responsibility of the owner and, therefore, it is the owner who should bear the expense of properly maintaining them. Further, because Customs allows importers the convenience of unlading at their own facilities, Customs must be assured that provisions for determining the quantities unladen are adequate.

Customs has concluded that certification of carrier tanks when gauge tables are to be used for vessel ullages would cause an unnecessary expense to the carrier in view of the fact that ulleges ordinarily will not be used to determine the actual quantity unladen unless none of the other methods of control in proposed section 151.42(a)(1) is available or shore measuring facilities are inadequate.

Customs must be assured that only bonded cargo is stored in storage tanks bonded as warehouses. Accordingly, it is not unreasonable to require removal of nonbonded petroleum from bonded tanks.

Customs is of the opinion that current law provides for the imposition of a penalty if a storage tank proprietor is negligent in reporting suspected inaccuracies to Customs before a survey of his tanks.

VIII. Hearing, Meeting, and Study Committee

Three commenters state that, before implementing a final rule, Customs should provide the public with an opportunity to discuss and comment on the proposed changes. One commenter suggests that Customs hold a public hearing; the second commenter suggests that Customs establish a study committee consisting of Customs officials, industry representatives, and experts in the science of petroleum management and statistics to study the proposals; and the third commenter suggests that Customs meet with industry personnel to discuss the proposals.

As previously noted, on January 8, 1980, Customs held an open conference with interested members of the public to further discuss and clarify the issues raised by the commenters. At the conference an attempt was made to resolve objections to the proposed regulations to the satisfaction of all participants.

IX. Vagueness of Terms—Need for Further Definition

Seven commenters state that terms used in the proposed regulations are either vague or inadequately defined.

Two commenters state that proposed section 151.42 is vague in that it does not specifically state under what conditions two methods of control are to be used and who is to determine when it is possible to use two methods of control.

Five commenters state that terms such as "petroleum and petroleum products," "gross quantity landed," "net quantity landed," "net quantity," "manifest," "public gauger," "verification," and "acceptance" should be better defined.

As previously stated, Customs has determined that only one method of measurement will be used to determine the amount of petroleum and petroleum products unladen and has modified the proposed regulations accordingly.

Customs is of the opinion that the terms "public gauger," "verification," and "accepted," do not require further definition because their meanings in the context of the regulations are well-known to the importing and transportation communities. However, to aid in understanding the regulations, the following definitions are provided:

1. "Petroleum and petroleum products" includes, but is not limited to, those items found in schedule 4, part 10, Tariff Schedules of the United States (TSUS) (19 U.S.C. 1202), and those items in schedule 4, part 2, TSUS, if comprised of hydrocarbons derived from petroleum. Customs reserves the right to determine the application of the term on a case-by-case basis.

2. "Gross quantity unladen" or "gross quantity" is the amount directly unladen (landed) from vessel to shore without allowance for excessive water and sediment (BS&W).

3. "Net quantity unladen" or "net quantity" is the gross quantity unladen (landed) adjusted for excessive water and sediment (BS&W) in accordance with section 151.46, Customs Regulations.

4. "Manifest" is an invoice of the cargo on board a carrier. The form of the manifest and the information therein varies according to the type of carrier. Customs manifest requirements are found in sections 4.7 and 4.7a and part 123, Customs Regulations (19 CFR 4.7, 4.7a, part 123) and 19 U.S.C. 1431.

X. Miscellaneous

One commenter is of the opinion that (1) requiring that estimates of petroleum and petroleum products unladen or withdrawn from bonded tanks not vary by more than 1 percent from the actual gross quantity unladen or withdrawn, and (2) the assessment of a penalty in cases where the variance exceeds 1 percent, are unreasonable considering the difficulty in measuring certain products or unusually small quantities of a product. A second commenter believes that a difference of 3 percent should be allowed between estimation and delivery because there are many variables (such as problems in the use of common pipelines to supply fuels to bonded tanks) which make it impossible to meet the 1-percent requirement.

Another commenter states that, in reference to proposed section 151.41, "Information on Entry Summary," the explanatory material refers to an estimate of the quantity unladen, but the proposed regulation itself requires a notation of the API gravity, which is redundant

because petroleum is graded by API gravity for tariff schedule purposes. One commenter questions whether and to what extent the proposed amendments imply recalibration (restrapping).

Customs recognizes the difficulties involved, and in order to allow importers greater latitude in preparing estimates required in proposed sections 151.41 and 151.45, the regulations have been modified to provide for a 3-percent variance between the estimated quantity and the net quantity unladen before a penalty may be incurred.

Although section 151.41 requires that the importer show API gravity at 60° F, that and the estimate of the volumetric quantity landed are two distinctly different figures and both must be provided.

Customs does not anticipate that any additional recalibration or restrapping will be required as a result of these amendments.

DRAFTING INFORMATION

The principal author of this document was Lawrence P. Dunham, Regulations and Research Division, Office of Regulations and Rulings, U.S. Customs Service. However, personnel from other offices of the Customs Service and the Department of the Treasury participated in, its development.

ADOPTION TO THE PROPOSED REGULATIONS

The proposed regulations set forth in the notice of proposed rulemaking published on November 7, 1979 (44 F.R. 64434), are adopted subject to the revisions made below.

AMENDMENTS TO THE REGULATIONS

Parts 4, 144, 151, and 159, Customs Regulations (19 CFR parts 4, 144, 151, 159), are amended as set forth below.

R. E. CHASEN,
Commissioner of Customs.

Approved: April 24, 1980.
RICHARD J. DAVIS,
Assistant Secretary of the Treasury.

AMENDMENTS TO THE CUSTOMS REGULATIONS

PART 4—VESSELS IN FOREIGN AND DOMESTIC TRADES

Section 4.12 is amended to read as follows:

§ 4.12 Explanation of manifest discrepancy.

(a)(1) Vessel masters or agents shall notify the district director on Customs form 5931 of shortages (merchandise manifested, but not found) or overages (merchandise found, but not manifested) of merchandise.

(2) Shortages shall be reported to the district director by the master or agent of the vessel by endorsement on the importer's claim for shortage on Customs form 5931 as provided for in section 158.3 of this chapter, or within 60 days after the date of entry of the vessel, whichever is later. Satisfactory evidence to support the claim of nonimportation [1] or of proper disposition or other corrective action (see sec. 4.34) shall be obtained by the master or agent and shall be retained in the carrier's file for 1 year.

(3) Overages shall be reported to the district director within 60 days after the date of entry of the vessel by completion of a post entry [2] or suitable explanation of corrective action (see sec. 4.34) on the Customs form 5931.

(4) The district director shall immediately advise the master or agent of those discrepancies which are not reported by the master or agent. Notification may be in any appropriate manner, including the furnishing of a copy of Customs Form 5931 to the master or agent. The master or agent shall satisfactorily resolve the matter within 30 days after the date of such notification, or within 60 days after entry of the vessel, whichever is later.

(5)(a) Unless the required notification and explanation is made timely and the district director is satisfied that the discrepancies resulted from clerical error or other mistake and that there has been no loss of revenue (and in the case of a discrepancy not initially reported by the master or agent that there was a valid reason for failing to so report), applicable penalties under section 584, Tariff Act of 1930, as amended (19 U.S.C. 1584), shall be assessed (see sec. 162.31 of this chapter). For purposes of this section, the term "clerical error" is defined as a nonnegligent, inadvertent, or typographical mistake in the preparation, assembly, or submission of the manifest. However, repeated similar manifest descrepancies by the same parties may be deemed the result of negligence and not clerical error or other mistake. For the purpose of assessing applicable penalties, the value of the merchandise shall be determined as prescribed in section 162.43 of this chapter. The fact that the master or owner had no knowledge of a discrepancy shall not relieve him from the penalty.

---

[1] * * * "If any merchandise described in such manifest is not found on board the vessel or vehicle the master or other person in charge or the owner of such vessel or vehicle or any person directly or indirectly responsible for any discrepancy between the merchandise and said manifest shall be subject to a penalty of $500: *Provided*, That if the appropriate Customs officer shall be satisfied that the manifest * * * is incorrect by reason of clerical error or other mistake and that no part of the merchandise not found on board was unshipped or discharged except as specified in the report of the master, said penalties shall not be incurred.* * *, the term 'clerical error' means a non-negligent, inadvertent, or typographical mistake in the preparation, assembly, or submission of the manifest.* * *" (Tariff Act of 1930, sec. 584, as amended; 19 U.S.C. 1584)

[2] "If there is any merchandise or baggage on board such vessel which is not included in or which does not agree with the manifest, the master of the vessel shall make a post entry thereof, and mail or deliver a copy to such employee as the Secretary of the Treasury shall designate and for failure so to do shall be liable to a penalty of $500." (Tariff Act of 1930, sec. 440, as amended; U.S.C. 1440)

(b) Except as provided in paragraph (c) of this section, a correction in the manifest shall not be required in the case of bulk merchandise if the district director is satisfied that the difference between the manifested quantity and the quantity unladen, whether the difference constitutes an overage or a shortage, is an ordinary and usual difference properly attributable to absorption of moisture, temperature, faulty weighing at the port of lading, or other similar reason. A correction in the manifest shall not be required because of discrepancies between marks or numbers on packages of merchandise and the marks or numbers for the same packages as shown on the manifest of the importing vessel when the quantity and description of the merchandise in such packages are correctly given.

(c) Manifest discrepancies (shortages and overages) of petroleum and petroleum products, imported in bulk shall be reported on Customs forms 5931 if the discrepancy exceeds 1 percent.

(R.S. 251, as amended, secs. 440, 584, 624, 48 Stat. 712, as amended, 748, as amended, 759 (19 U.S.C. 66, 1440, 1584, 1624))

* * * * * * *

(R.S. 251, as amended, sec. 624, 46 Stat. 759 (19 U.S.C. 66, 1624))

PART 144—WAREHOUSE AND REWAREHOUSE ENTRIES AND WITHDRAWALS

Section 144.37(e) is amended by changing the spelling of the word "gage" to "gauge" wherever it appears.

(R.S. 251, as amended, sec. 624, 46 Stat. 759 (19 U.S.C. 66, 1624))

PART 151—EXAMINATION, SAMPLING, AND TESTING OF MERCHANDISE

1. Section 151.28 is amended by changing the spelling of the words "gage" and "gaging" to "gauge" and "gauging", respectively, wherever the words appear.

2. Subpart C is amended to read as follows:

SUBPART C—PETROLEUM AND PETROLEUM PRODUCTS

§ 151.41 Information on entry summary.

On the entry summary for petroleum or petroleum products in bulk, the importer shall show the API gravity at 60° Fahrenheit, in accordance with the current edition of the ASTM–IP petroleum measurement tables (American edition), published by the American Society for Testing and Materials. The appropriate unabridged table shall be used in the reduction of volume to 60° F. If the exact volumetric quantity cannot be determined in advance, the entry summary may be made for "—— U.S. gallons, more or less," but in no case may the estimate vary by more than 3 percent from the gross quantity unladen. The information required by this section also shall be shown

on the entry summary permit if the entry summary is filed at the time of entry, and on each entry summary continuation sheet regardless of when the entry summary is filed.

151.42 Controls on unlading and gauging.

(a) *Methods of control.*—(1) Each district director shall establish controls and checks on the unlading and measurement of petroleum and petroleum products imported in bulk by vessel, truck, railroad car, pipeline, or other carrier. One of the following methods of control shall be employed:

(i) Customs approved positive displacement meters at installations where provided by the importer;

(ii) Customs approved turbine-type meters at installations where provided by the importer;

(iii) Shore tank gauging; or

(iv) Weighing, for trucks and railroad cars.

(2) Vessel ullages shall be taken in every case unless the district director determines that it is impracticable to do so for safety or technological reasons. Ullages may be taken for trucks and railroad cars if weighing or shore tank gauging is not available as a method of control. Vessel ullages will not be used to determine the quantity unladen unless none of the other methods provided for in this paragraph is available or adequate.

(b) *Duties of Customs officers.*—Customs officers shall perform or witness ullaging and gauging as follows:

(1) Opening ullages.

(2) Closing ullages of carriers which have not completely discharged cargo, or if an importer or carrier requests Customs to witness closing ullages because of special problems.

(3) Shore tank gauges performed by company or related-party employees.

(4) Between 5 and 10 percent of shore tank gauges performed by public gaugers.

(5) Shore tank gauges, including those conducted by a public gauger if no carrier ullages are taken.

(c) *Manifest discrepancies.*—Manifest discrepancies (shortages and overages) shall be reported by or on behalf of the carrier in the manner specified in section 4.12 of this chapter. If a reported discrepancy is not explained to the satisfaction of the district director, the master or other person in charge, or the owner of the vessel or vehicle, or any person directly or indirectly responsible for the discrepancy, will be subject to the imposition of the appropriate penalty under section 460, 584, or 592, Tariff Act of 1930, as amended (19 U.S.C. 1460, 1584, 1592).

§ 151.43 Public gaugers.

(a) *Acceptance of quantity reports.*—Subject to such controls and checks as he may deem necessary, the district director may accept, for shore tank gauging and closing carrier ullages, the reports of quantities of imported petroleum and petroleum products made by public gaugers approved by the Commissioner in accordance with this section, provided—

(1) Customs officers have exercised the supervision required by section 151.42(b) of this part, and

(2) There is no evidence that the public gauger has failed to comply with the provisions of this subpart.

(b) *Application.*—Any public gauger desiring approval shall submit an application, which may be in the form of a letter, to the Commissioner of Customs, Washington, D.C. 20229. The application shall contain or be accompanied by the following:

(1) The applicant's name, address, and ownership, and a statement of financial condition.

(2) If a corporation a copy of its articles of incorporation, a list of its officers and directors, and details of any parent-subsidiary relationship.

(3) A detailed statement of the applicant's qualifications.

(4) The Customs district(s) for which approval is requested.

(5) A written agreement in the following form to avoid conflict-of-interest situations and to comply with operating requirements prescribed by Customs:

Public Gauger Agreement

As conditions for the approval of this application, I undertake and agree:

(1) To have no financial interest or other connection (except for acceptance of the usual fees for gauging services) with any business or other activity which might be considered to affect the unbiased performance of my duties as a public gauger for Customs purposes, in accordance with the standards and procedures approved by the Commissioner of Customs.

(2) To comply with the requirements of part 151, subpart C, Customs Regulations (19 CFR part 151, subpart C), and with any procedures prescribed by the Commissioner or district director of Customs pursuant to that subpart.

(3) To notify the Commissioner and district director of Customs in writing within 60 days of any change of name, address, ownership, or financial condition, and, if a corporation, of any change in its articles of incorporation, officers, directors, or parent-subsidiary relationship.

(4) To communicate immediately to the Commissioner and district director of Customs notice of any—

(i) Effort to influence, or otherwise impede, the performance of my duties in connection with the proper gauging of petroleum or petroleum products, or

(ii) Attempt to coerce me fraudulently to change or falsify records maintained in the course of my employment.

(6) A bond in the amount of $10,000 to insure that the gauging will be in conformance with the approved standards and procedures, and with such procedures as may be prescribed by the district director pursuant to paragraph (f) of this section. The form of the required bond will be available from any district director.

(c) *Investigation of applicant.*—The Commissioner shall direct the Office of Investigations to determine the applicant's fitness and reputation, and to verify the correctness of the statements made in the application.

(d) *Notice of approval, disapproval, suspension, or revocation.*—When the investigation is completed, the applicant will be advised of the approval of his application, or, if disapproved, of the reasons for such action. An approval may be suspended or revoked by the Commissioner for failure to comply with any of the provisions of this subpart, or liquidated damages may be assessed under the public gauger bond described in section 113.13(b) of this chapter. Notice of approvals or suspensions or revocations of approval will be published from time to time in the CUSTOMS BULLETIN.

(e) *Requirements for operations.*—To be approved for Customs purposes, a public gauger's operations shall conform to the following requirements.

(1) All measuring, testing, and sampling devices in use shall be maintained in first-class condition. Each device shall be calibrated before the first use, and checked at regular intervals thereafter, against standards whose accuracy is traceable to standards issued by the National Bureau of Standards. In making calibrations and checks, the applicable methods of the American Society for Testing and Materials or the American Petroleum Institute shall be used.

(2) All measuring, testing, and sampling procedures shall be in conformance with published industry standards, such as those of the American Petroleum Institute or the American Society for Testing and Materials, and shall conform to such specific procedures as may be required by the district director in accordance with paragraph (f) of this section.

(3) Each public gauger and each other person authorized to sign gauging reports shall furnish Customs with a written certification that he has a minimum of 6 months on-the-job training and experience.

(4)(i) The public gauger shall investigate promptly any apparent irregularities, procedural difficulties, or indications of systematic bias called to his attention by the district director, or of which he otherwise may become aware, and immediately shall take corrective measures if indicated. The public gauger shall notify the district director of any such matter of which he may become aware.

(ii) The district director shall notify the Commissioner of each such matter that he brings to the attention of the public gauger, or which the public gauger brings to his attention, and of the corrective measures taken.

(f) *Procedures prescribed by district director.*—The district director is authorized to prescribe general or specific procedures to be followed by each approved public gauger at each of the discharging facilities in the district.

(g) *Recordkeeping requirement.*—Records of the public gauger of the type normally kept in the ordinary course of business, pertaining to the measurement, gauging, testing, and sampling of imported petroleum and petroleum products, shall be maintained for 5 years in accordance with sections 162.1a and 162.1c of this chapter.

(h) *Verification requirement.*—

(1) *Compliance.*—To insure compliance with the provisions of this subpart and accuracy and uniformity in the information submitted by public gaugers, the district director shall verify by integrity checks, audits, and, if necessary, investigations, the gauging operations in his district. Any discrepancy between the quantity reported by the gauger and the quantity found by Customs shall be resolved in favor of Customs unless the gauger produces clear and convincing evidence that Customs is in error.

(2) *Sanctions.*—If a public gauger's reports are repeatedly inaccurate to a significant degree, the gauger may be subject to sanctions in accordance with sections 151.43 (d) and (i).

(i) *Suspension or revocation of Customs approval.*—(1) *Grounds.*—Failure to comply with the provisions of this subpart may be grounds for suspension or revocation of Customs approval of a public gauger.

(2) *Notice.*—The district director shall give written notice of the proposed suspension or revocation to the public gauger. The notice shall be in the form of a statement setting forth specific grounds for the proposed action and shall become final unless the public gauger files a written reply in accordance with paragraph (3) of this subsection. An information copy of the notice shall be forwarded by the district director to headquarters.

(3) *Reply.*—The public gauger may file a written reply with the district director within 10 days following receipt of the notice. An extension of time to reply beyond the 10-day period may be granted

for good cause. The reply shall be filed in duplicate and shall set forth the response of the public gauger, including his answers to the allegations and rebuttal evidence, if any. The district director upon request, may allow an oral presentation as to why approval should not be suspended or revoked.

(4) *Action on reply.*—If the district director determines that the allegations set forth in the notice have not been proved, he shall notify the public gauger that suspension or revocation no longer is contemplated, and the case shall be closed. Otherwise, the approval shall be suspended or revoked, in which case the district director shall notify the gauger that he may request review of the suspension or revocation by the Commissioner in accordance with paragraph (6). An information copy of the district director's action shall be forwarded to headquarters.

(5) *Stay of suspension or revocation.*—The decision of the district director to suspend or revoke approval shall be stayed until the time for the gauger to file a petition for review by headquarters has passed and no action has been taken on his part or, if a petition for review has been filed in accordance with paragraph (6), until headquarters affirms the decision of the district director.

(6) *Review of suspension or revocation of approval.*—Petitions for review of suspension or revocation of a public gauger's Customs approval by the district director shall be addressed to the Commissioner and filed in duplicate with the appropriate district director for transmission to headquarters. Petitions for review shall be filed within 30 days from the date of suspension or revocation of approval and shall state the facts and circumstances relied upon by the petitioner in seeking review of the district director's order. The petition shall be reviewed by the Commissioner or his designee. Upon completion of the review, a written decision shall be forwarded to the district director for delivery to the public gauger.

(7) *Publication.*—Notice of any final action by the district director or the Commissioner suspending or revoking approval of a public gauger shall be published in the Federal Register and the CUSTOMS BULLETIN.

(j) *Penalties.* In addition to—

(i) Any penalty otherwise provided by law which may be incurred for failure to comply with the provisions of this subpart, or

(ii) Any sanction which may be imposed against a public gauger approved by Customs under the provisions of this subpart, a monetary penalty also may be assessed under section 592, Tariff Act of 1930, as amended (19 U.S.C. 1592), if appropriate.

§ 151.44 Storage tanks.

(a) *Plans and gauge tables.*—When petroleum or petroleum products

subject to duty at a specific rate per gallon are imported in bulk in tank vessels and are to be transferred into shore storage tanks, both the plans of each shore tank showing all outlets and inlets and the gauge table for each tank showing its capacity in U.S. gallons per inch or fraction of an inch of height shall be certified as correct by the proprietor of the tank. One set of these plans and gauge tables so certified shall be kept on file at the plant of the oil company and shall be available at all times to Customs officers. Another certified set of the shore tank plans and gauge tables shall be filed with the district director for use in verifying the Customs officers' reports. The district director may require such additional sets of shore tank plans, including subsidiary pipeline plans, and gauge tables as he may deem necessary. The storage tank proprietor shall maintain the plans and gauge tables for 3 years after discontinuing use of the storage tanks as bonded warehouses for the storage of imported petroleum or petroleum products.

(b) *Tags required on valves.*—The inlet and outlet valves of each tank shall have tags of a permanent type affixed by the proprietor or lessee indicating the use of the values.

(c) *Verification of gauge tables.*—Whenever he has reason to suspect their reliability, the district director may require the measurement and calibrations shown on the gauge tables to be verified by a Customs officer. If no qualified Customs officer is available, the district director may accept an independent certification verifying the measurements and calibrations. The independent verification shall be performed at the expense of the storage tank proprietor.

§ 151.45 Storage tanks bonded as warehouses.

(a) *Application.*—Tanks for the storage of imported petroleum or petroleum products in bulk may be bonded as warehouses of class 2 if to be used exclusively for the storage of petroleum or petroleum products belonging or consigned to the owner or lessee of the tank. In addition to the documents and bonds required to be filed with the application to bond (see sec. 19.2 of this chapter), the certified plans and gauge tables required by section 151.43 shall be filed.

(b) *Removal of nonbonded petroleum.*—If a bonded tank is not empty at the time the first importation of bonded petroleum or petroleum products is to be stored therein, the amount of nonbonded petroelum or petroleum products in the tank shall be withdrawn by the proprietor as soon as possible. The request to withdraw shall be in the form of a letter and no formal withdrawal need be filed. Domestic or duty-paid petroleum or petroleum products shall not thereafter be stored in the tank as long as the tank remains bonded.

(c) *Information on warehouse withdrawal.*—Warehouse withdrawals of petroleum or petroleum products from bonded tanks shall show the

information specified in section 151.41, as well as the designation of the tank from which the merchandise is to be withdrawn. Such withdrawals may be made for "—— U.S. gallons, more or less," but in no case may the estimate vary by more than 3 percent from the gross quantity unladen.

§ 151.46 Allowance for excessive water and sediment.

Allowance for excessive moisture or other impurities in imported petroleum or petroleum products shall be made in accordance with section 158.13 of this chapter for the quantity of water and sediment, established to be in excess of that usually found in such merchandise, as set forth in the following table:

Merchandise:	*Quantity (percent)*
Crude petroleum	0.3
Petroleum products having an API gravity at 60° of less than 22 inches	0.5
22 inches to 30 inches	0.3
More than 30 inches	0.0

§ 151.47 Entered quantities of petroleum or petroleum products released under entry or immediate delivery.

(a) *Optional entry of net quantity landed.*—As an alternative to stating on the entry summary the gross quantity of petroleum or petroleum products released under the immediate delivery procedure in section 142.21 of this chapter, or under the entry documentation in section 142.3(a), the importer may file an entry summary for the net quantity of petroleum or petroleum products unladen. The net quantity shall be determined in accordance with section 158.13 of this chapter, with an allowance made for sediment and excessive water present, as prescribed in the table found in section 151.46, and reported in a laboratory test made by an independent commercial laboratory which has been approved by the Commissioner. The commercial laboratory report shall be filed with the entry summary.

(b) *Approval of independent commercial laboratories.*—Applications of independent commercial laboratories for approval of the use of their tests in determining the net landed quantity of petroleum or petroleum products shall be sent to the Commissioner of Customs, Washington, D.C. 20229. For the purposes of this section, the approval of a public gauger by the Commissioner in accordance with section 151.43 shall constitute approval of the commercial laboratories operated by the public gauger as a part of the services rendered by him for his customers.

(c) *Use of Customs laboratory tests for liquidation.*—Where there is a difference between the quantity reported by the Customs laboratory and the quantity reported by the approved independent commercial laboratory, the results of the Customs laboratory test shall be used in

the liquidation of the entry and in determining the quantity chargeable against the importer's oil import license, unless the difference is within the limits set forth in paragraph (d) of this section.

(d) *Use of commercial laboratory tests for liquidation.*—The quantity reported by the approved independent commercial laboratory shall be used in the liquidation of the entry and in determining the quantity chargeable against the importer's oil import license if the difference between the commercial laboratory test and the Customs laboratory test do not exceed the differences set forth in the following table (adapted from ASTM designation D 1796, fig. 3):

Percentage of water and sediment found by Customs laboratory:	*Maximum percentage difference allowable*
0.05 to 0.50	0.1
0.51 to 1.50	0.2
More than 1.50	0.3

(Sec. 507, 46 Stat. 732 (19 U.S.C. 1507) (R.S. 251, as amended, sec. 624, 46 Stat. 759, 77A Stat. 14 (19 U.S.C. 66, 1202 (general headnotes 11, 12), 1624))

PART 159—LIQUIDATION OF DUTIES

Section 159.21(a) is amended by changing the spelling of the word "gage" to "gauge" in the first sentence.

(R.S. 251, as amended, sec. 624, 46 Stat. 759 (19 U.S.C. 66, 1624))

[Published in the Federal Register April 30, 1980 (45 F.R. 36376)]

(T.D. 80-143)

Foreign Currencies—Daily Rates for Countries Not on Quarterly List

Rates of exchange based on rates certified to the Secretary of the Treasury by the Federal Reserve Bank of New York for the Brazil cruzeiro, People's Republic of China yuan, Hong Kong dollar, Iran rial, Philippines peso, Singapore dollar, Thailand baht (tical) and Venezuela bolivar

The Federal Reserve Bank of New York, pursuant to section 522(c), Tariff Act of 1930, as amended (31 U.S.C. 372 (c)), has certified buying rates for the dates and foreign currencies shown below. The rates of exchange, based on these buying rates, are published for the information and use of Customs officers and others concerned pursuant to part 159, subpart C, Customs Regulations (19 CFR 159, subpart C).

Brazil cruzeiro:	
May 5–9, 1980	$0.0204
People's Republic of China yuan:	
May 5, 1980	$0.660458
May 6–7, 1980	.663790
May 8–9, 1980	.667824

320-979 O - 80 - 3

Hong Kong dollar:	
May 5, 1980	$0.203046
May 6, 1980	.204918
May 7, 1980	.205086
May 8, 1980	.204332
May 9, 1980	.203542
Iran rial:	
May 5–9, 1980	Not available
Philippines peso:	
May 5–9, 1980	$0.1345
Singapore dollar:	
May 5, 1980	$0.459770
May 6, 1980	.462000
May 7, 1980	.463607
May 8, 1980	.461574
May 9, 1980	.460511
Thailand baht (tical):	
May 5–9, 1980	$0.0490
Venezuela bolivar:	
May 5–9, 1980	$0.2329

(LIQ-3-TRODE)

Dated: May 21, 1980.

G. SCOTT SHREVE
(For Chester R. Krayton, Director,
Duty Assessment Division).

(T.D. 80-144)

Foreign Currencies—Variances From Quarterly Rate

Rates of exchange based upon rates certified to the Secretary of the Treasury by the Federal Reserve Bank of New York

The following rates of exchange are based upon rates certified to the Secretary of the Treasury by the Federal Reserve Bank of New York, pursuant to section 522(c), Tariff Act of 1930, as amended (31 U.S.C. 372(c)), and reflect variances of 5 per centum or more from the quarterly rate published in T.D. 80-103 for the following countries. Therefore, as to entries covering merchandise exported on the dates listed, whenever it is necessary for Customs purposes to convert such currency into currency of the United States, conversion shall be at the following rates:

Austria schilling:	
May 5, 1980	$0.077399
May 6, 1980	.076982
May 7, 1980	.078493
May 8, 1980	.078125
May 9, 1980	.077580
Belgium franc:	
May 5, 1980	$0.034734
May 6, 1980	.034686
May 7, 1980	.034855
May 8, 1980	.034554
May 9, 1980	.034282
Denmark krone:	
May 5, 1980	$0.177541
May 6, 1980	.177683
May 7, 1980	.178317
May 8, 1980	.177462
May 9, 1980	.176211
Finland markka:	
May 5, 1980	$0.268565
May 6, 1980	.270416
May 7, 1980	.270929
May 8, 1980	.270307
May 9, 1980	.268926
France franc:	
May 5, 1980	$0.237812
May 6, 1980	.238550
May 7, 1980	.238834
May 8, 1980	.237982
May 9, 1980	.236128
Germany deutsche mark:	
May 5, 1980	$0.556793
May 6, 1980	.557724
May 7, 1980	.560067
May 8, 1980	.557631
May 9, 1980	.551876
India rupee:	
May 5–9, 1980	$0.1266
Ireland pound:	
May 5, 1980	$2.0575
May 6, 1980	2.0642
May 7, 1980	2.0750
May 8, 1980	2.0735
May 9, 1980	2.0550

Italy lira:	
May 5, 1980	$0.001180
May 6, 1980	.001184
May 7, 1980	.001188
May 8, 1980	.001182
May 9, 1980	.001174
Japan yen:	
May 5, 1980	$0.004216
May 6, 1980	.004314
May 7, 1980	.004313
May 8, 1980	.004281
May 9, 1980	.004314
Malaysia dollar:	
May 7, 1980	$0.454959
May 8, 1980	.453926
May 9, 1980	.453206
Netherlands guilder:	
May 5, 1980	$0.502892
May 6, 1980	.504541
May 7, 1980	.506329
May 8, 1980	.504796
May 9, 1980	.500626
Norway krone:	
May 5, 1980	$0.202840
May 6, 1980	.203252
May 7, 1980	.203625
May 8, 1980	.202963
May 9, 1980	.202265
Portugal escudo:	
May 7, 1980	$0.020387
May 8, 1980	.020284
Sweden krona:	
May 5, 1980	$0.236686
May 6, 1980	.237530
May 7, 1980	.237192
May 8, 1980	.236686
May 9, 1980	.235710
Switzerland franc:	
May 5, 1980	$0.601504
May 6, 1980	.604230
May 7, 1980	.606061
May 8, 1980	.601685
May 9, 1980	.594530

United Kingdom pound:

May 5, 1980	$2.2780
May 6, 1980	2.2795
May 7, 1980	2.2815
May 8, 1980	2.2850
May 9, 1980	2.2670

(LIQ-3-TRODE)

Dated: May 21, 1980.

G. SCOTT SHREVE
(For Chester R. Krayton, Director,
Duty Assessment Division).

(T.D. 80-145)

Instruments of International Traffic

Certain steel slings used for the transportation of steel products designated as instruments of international traffic

It has been established to the satisfaction of the U.S. Customs Service that steel slings composed of steel cables 10 to 15 feet long with a swedged eye on each end and having permanent identifying markings, and which are designed to hold steel products during their transportation, are substantial, are suitable for and capable of repeated use, and are used in significant numbers in international traffic.

Under the authority of section 10.41a(a)(1), Customs Regulations, I hereby designate the above-described steel slings as "instruments of international traffic" within the meaning of section 322(a), Tariff Act of 1930, as amended (19 U.S.C. 1322(a)), while they are used to hold steel products together from the time of manufacture until the products reach their point of unlading or ultimate destination in the United States, provided the slings are distinguished readily from similar slings not so used by permanently affixed plates or tags with appropriate markings. These slings may be released under the procedures set forth in section 10.41a, Customs Regulations.

C.S.D. 79-235 states that the same steel slings are not classifiable as instruments of international traffic if used solely to lade and unlade steel pipes. That decision is distinguishable because the steel slings to which this decision applies are to be used to hold steel products during the transportation of the products in international traffic. (104257)

(BOR-7-07)

Dated: May 20, 1980.

ALFRED G. SCHALLE,
Director,
Carriers, Drawback and Bonds Division.

[Published in the Federal Register June 2, 1980 (45 FR 37323)]

(T.D. 80-146)

Watches and Watch Movements

Tariff treatment under general headnote 3(a), Tariff Schedules of the United States: Change of practice

AGENCY: U.S. Customs Service, Department of the Treasury.

ACTION: Change of practice.

SUMMARY: This document gives notice that the Customs Service has reviewed the current practice of according duty-free treatment to watches and watch movements pursuant to general headnote 3(a), Tariff Schedules of the United States (TSUS). The Customs Service had ruled that certain watches and watch movements assembled in the insular possessions from foreign watch subassemblies and parts satisfy the general headnote 3(a), TSUS, requirement of having been manufactured or produced in the insular possessions. Watches and watch movements which do not qualify for tariff treatment under general headnote 3(a), TSUS, are dutiable pursuant to subpart E, part 2, schedule 7, TSUS.

The Customs Service also had ruled that watch movements which are cased in the possessions are not considered as single entities, but rather are constructively separated for the purpose of determining whether the movement and the watch case have each been subjected to a level of processing in the insular possessions which would bring the duty-free provision of general headnote 3(a) into operation.

The longstanding practice of the Customs Service is changed in this area in that certain objective measures are established, where none previously existed, by which it can be determined whether a watch or watch movement has become a production or manufacture of the insular possessions. Further, the practice of considering the movement and case separately is changed and watches will be regarded in a unitary fashion, thus making it possible for a cased watch movement to be entered as an entirety.

DATES: This change of practice will be effective with respect to merchandise entering the Customs Territory of the United States on or after the 90th day following publication of this notice in the Federal Register, except that it is effective on publication with respect to the change of practice regarding the casing of watch movements.

FOR FURTHER INFORMATION CONTACT: Larry L. Burton, Classification and Value Division, U.S. Customs Service, 1301 Constitution Avenue NW., Washington, D.C. 20229; 202-566-5727.

SUPPLEMENTARY INFORMATION:

BACKGROUND

Under a uniform and established practice, the Customs Service accords duty-free treatment to importations of certain watches and watch movements from the insular possessions, pursuant to general headnote 3(a), TSUS.

GENERAL HEADNOTE 3(A), TSUS

Under general headnote 3(a), TSUS, watches and watch movements imported from an insular possession may enter the Customs territory of the United States free of duty if they:

(1) Are manufactured or produced in the possession.

(2) Do not contain foreign materials which represent more than 70 percent of their total value; and

(3) Come directly to the Customs territory of the United States from the possession.

In order to satisfy the manufactured or produced requirements of general headnote 3(a), TSUS, a new and different article of commerce must result from the operations performed in the insular possession.

The insular possessions include the Virgin Islands, American Samoa, and Guam. The Customs territory of the United States includes the 50 States, the District of Columbia, and Puerto Rico.

General headnote 3(a), TSUS, embodies a legislative intent to promote the growth of the economies of the insular possessions by stimulating the development of light industry, such as watch assembly. (S. Rept. No. 94–273, 94th Cong., 1st sess. (1975), reprinted in 1975 United States Code Cong. Ad. News at 884, et seq.)

Because of concern that the legislative intent was not being given full effect, a notice was published in the December 11, 1978, Federal Register (43 F.R. 57921) stating that the Customs Service was considering a change in the practice of affording duty-free entry to watches and watch movements imported from the insular possessions. Of particular concern were so-called "low labor" watches and watch movements which were subjected to minimal assembly processes in the possessions. The threshold question was whether a product or manufacture of the possessions resulted from the limited assembly operations.

Comments were received and considered and on September 17, 1979, a proposed change of practice was published in the Federal Register (44 F.R. 53759), wherein the comments were summarized and a framework for watch assembly requirements was presented. The purpose of the outlined formula presented was to provide the basis for establishment of objective measures, by which the sufficiency of assembly operations could be gauged in light of the congressional intent behind general headnote 3(a), TSUS.

DISCUSSION OF COMMENTS

The Customs Service has received 15 submissions commenting upon the September 17, 1979, Federal Register notice. The commenters generally support any effort on the part of Customs to further the legislative intent. Some commenters give wholehearted endorsement to the program as it appeared in the Federal Register notice. The majority, however, indicate that if the Customs Service instituted a change, the requirements would have to be much more detailed and extensively explained than the rather attenuated outline which was published for comment. Nine of the commenters state full support for any move to treat a cased movement as a single entity for tariff purposes. The remaining commenters do not address the cased movement issue. Finally, several of them urge watch assembly alternatives in the form of substitute operations which would require the same or even an increased degree of labor input in the possessions as contemplated in the formula outlined in the September 17, 1979, publication, but which would lend a certain flexibility to the requirements. This would be especially helpful to assemblers in the possessions who receive component parts in configurations which may not conform to the Customs guidelines. By using the guidelines, it will be determined whether a particular watch or watch movement is a manufacture or production of the possessions.

In responding to the comments, we wish to make it clear that the need for detailed requirements is recognized, and we believe that the guidelines which follow will adequately address the need perceived by the commenters. On the matter of substitute assembly operations, we too believe that the inclusion of such a provision would help create a more flexible program, especially for assemblers whose suppliers provide them with component parts in configurations which do not conform to the guidelines set forth. We recognize that parts suppliers provide components to assemblers in a multitude of configurations. We believe that providing for assembly alternatives will make it less burdensome for parties to conform to the new standards without major changes in shipment practices.

CHANGE OF PRACTICE

The Customs Service will be guided by the following objective measures in determining whether a watch movement assembled in the insular possessions has been subjected to a sufficient process of manufacture.

A. For conventional balance wheel and hairspring watch movements, of the following four major assembly operations, no fewer than two

must be performed in the insular possessions as set forth below, with the exception that alternative assembly operations may be permitted as indicated:

1. Assembly of escapement from:
   a. Balance assembly consisting of:
      (1) Balance subassembly (fully preassembled is acceptable).
      (2) Balance cock screws.
   b. Escapement subassembly consisting of:
      (1) Pallet.
      (2) Pallet cock.
      (3) Pallet cock screws.
2. Assembly of gear train from:
   (1) Third wheel.
   (2) Fourth wheel.
   (3) Center wheel.
   (4) Train wheel bridge.
   (5) Escape wheel.
   (6) Bridge screws.
3. Assembly of winding and setting mechanism from:
   (1) Winding stem.
   (2) Winding pinion.
   (3) Setting lever.
   (4) Clutch lever (yoke).
   (5) Setting lever spring.
   (6) Clutch wheel.
   (7) Setting wheel.
   (8) Setting lever screw.
   (9) Minute wheel or minute pinion.
4. Assembly of barrel mechanism from:
   a. Barrel subassembly consisting of:
      (1) Barrel.
      (2) Barrel arbor.
      (3) Mainspring.
      (4) Barrel cover.
   b. Barrel bridge subassembly consisting of:
      (1) Barrel bridge.
      (2) Crown wheel.
      (3) Crown wheel ring.
      (4) Crown wheel screw.
      (5) Click.
      (6) Click spring.
      (7) Ratchet wheel.

(8) Ratchet wheel screw.
(9) Barrel bridge screw(s).
c. Joining barrel and barrel bridge subassemblies.

Alternative assembly operations

As an alternative to completion of two of the four major operations listed above, an assembler may choose to complete one such operation, and in addition complete a minumum of two of the following operations as a substitute for one major operation; provided, however, that no manufacturing process shall be deemed sufficient if, in the judgment of the appropriate Customs officer, it does not involve processing in the insular possessions at a level at least equal to that entailed in the completion of two of the four major assembly operations listed above. The alternative operations are:

1. Dialing and handing completed from:
   (1) Dial.
   (2) Minute hand.
   (3) Hour hand.
   (4) Hour wheel.
   (5) Hour wheel washer.
   (6) Dial screws.
2. Automatic mechanism assembly completed from:
   (a) Automatic mechanism subassembly consisting of:
      (1) Framework.
      (2) Framework screw.
      (3) Stop click.
      (4) Stop click screw.
      (5) Reduction gear.
      (6) Transmission wheel.
      (7) Pinion.
      (8) Bridge.
      (9) Bridge screw.
   (b) Combining subassembly "a" with:
      (1) Oscillating weight.
      (2) Gib.
      (3) Gib screw.
3. Day/Date Calendar Assembly completed from:
   a. Calendar plate subassembly consisting of:
      (1) Date jumper.
      (2) Date jumper spring.
      (3) Date dial guard.
      (4) Date dial guard screws.
      (5) Day jumper.

(6) Day jumper screw.
(7) Day jumper spring.
(8) Date dial.

b. Combining subassembly "a" with:
(1) Day/date driving wheel.
(2) Day star with disc.
(3) Calendar plate screws.

4. Possibly casing (see below).

B. For electronic quartz watch movements (analog) of the following major assembly operations, no fewer than two must be performed in the insular possessions as set forth below, with the exception that alternative assembly operations may be permitted as indicated.

Further, if assembly of the power source is performed as one of the major assembly operations, one alternative assembly operation must be performed in addition to the two major assembly steps undertaken. Alternative operations are designated after the following description of the four major assembly operations.

1. Assembly of coil support and circuit from:
(1) Circuit (fully preassembled is acceptable).
(2) Coil support screws.

2. Assembly of train from:
(1) Center tube.
(2) Rotor.
(3) Train wheels.
(4) Train wheel bridge seats.
(5) Stop lever.
(6) Train wheel bridge.
(7) Train bridge screws.

3. Assembly of function control, dial-side train assembly, and setting mechanism from:
(1) Minute wheel.
(2) Hour wheel.
(3) Setting wheel.
(4) Minute train cover.
(4) Minute train cover.
(5) Minute train cover screws.
(6) Yoke setting lever.
(7) Yoke spring.
(8) Setting level jumper.
(9) Setting lever screws.

4. Assembly of power source from:
(1) Battery.
(2) Bridle.
(3) Bridle screw(s).

Alternative assembly operations

As an alternative to completion of two of the four major operations listed above for analog quartz watch movements, an assembler may choose to complete only one such operation and, in addition thereto, complete two of the operations which follow as a substitute for one major operation. Provided, however, that no manufacturing process shall be deemed sufficient if, in the judgment of the appropriate Customs officer, it does not involve processing in the insular possessions at a level at least equal to that entailed in the completion of two of the four major assembly operations listed above. However, assembly of the power source will not be permitted to constitute the sole major assembly operation employed. The alternative assembly operations are:

(1) Dialing and handing (completed as for conventional watch movements).

(2) Day/Date calendar assembly (completed as for conventional watch movements).

(3) Possibly casing (see below).

Casing of watch movements (conventional and analog)

The Customs Service will regard cased watch movements (watches) from the insular possessions as single entities for tariff purposes. The watch, viewed in a unitary fashion, must meet the general headnote 3(a), TSUS, criteria for duty-free entry as detailed earlier in this document. Watch movements which meet the assembly criteria set forth above may be placed in watch cases which arrive in the insular possessions in any degree of preassembly, or if the watch case is assembled in the insular possessions from at least seven discrete components, the case assembly process will be regarded as an additional alternative assembly step which may be freely substituted for major assembly operations, subject only to the same limitations which apply to the other alternative steps.

DRAFTING INFORMATION

The principal author of this notice was Larry L. Burton, Office of Regulations and Rulings, U.S. Customs Service. However, personnel from other Federal agencies as well as other offices of the U.S. Customs Service participated in developing this notice both on matters of substance and style.

R. E. CHASEN,
Commissioner of Customs.

Approved: May 8, 1980.
RICHARD J. DAVIS,
Assistant Secretary of the Treasury.

[Published in the Federal Register June 2, 1980 (45 FR 37324)]

ERRATUM

In CUSTOMS BULLETIN volume 14 No. 20, dated May 14, 1980, the rehearing notice on page 41 should preceed the International Trade Commissions notice on page 38.

Decisions of the United States Customs Court

United States Customs Court

One Federal Plaza
New York, N.Y. 10007

Chief Judge

Edward D. Re

Judges

Paul P. Rao
Morgan Ford
Scovel Richardson
Frederick Landis
James L. Watson
Herbert N. Maletz
Bernard Newman
Nils A. Boe

Senior Judge

Samuel M. Rosenstein

Clerk

Joseph E. Lombardi

Customs Decisions

(C.D. 4855)

SANYO ELECTRIC INC., PLAINTIFF, *v.* UNITED STATES, DEFENDANT

Power Failure Lights

Court No. 75-9-02446

Merchandise invoiced as power failure lights, classified as flashlights under item 683.70 of the Tariff Schedules of the United States, and assessed with duty at the rate of 35 per centum ad valorem, *held* properly classifiable under item 688.40, as modified, as electrical articles, not specially provided for, with duty of 5.5 per centum ad valorem.

JUDICIALLY DETERMINED MEANING OF "FLASHLIGHT"

The term "flashlight" has been judicially determined to be a small, battery-operated, portable electric light. *Air-Sea Forwarders, Inc.* v. *United States*, 76 Cust. Ct. 268, C.D. 4665 (1976); *Biddle Purchasing Co.* v. *United States*, 48 Cust. Ct. 251, 257, C.D. 2345 (1962), *aff'd*, 50 CCPA 71, C.A.D. 823 (1963)

MULTIFUNCTION ARTICLES—CLASSIFICATION

It is well settled that a combination or multifunction article is not classifiable for tariff purposes under a specific statutory provision which describes only one of its features or functions as the importation is "more than" the article described. See *Robert Bosch Corp. et al.* v. *United States*, 63 Cust. Ct. 96, 103–104, C.D. 3881 (1969); *Dollar Trading Corp.* v. *United States*, 468 F. 2d 631, 60 CCPA 10, C.A.D. 1074 (1972); *United States* v. *Acec Electric Corporation*, 474 F. 2d 1009, 60 CCPA 113, C.A.D. 1091 (1973); *Fedtro, Inc.* v. *United States*, 449 F. 2d 1395, 59 CCPA 16, C.A.D. 1028 (1971). Although the power failure light has multifunctions, viz., to alert that there has been a power failure, as a stationary light source after a power failure, and as a portable light source, the power failure warning is its primary function. Consequently, it is more than a "flashlight" within the purview of TSUS item 683.70.

[Judgment for plaintiff.]

(Decided May 12, 1980)

Sharretts, Paley, Carter & Blauvelt, P. C. (*Peter Jay Baskin* at the trial; *Gail T. Cumins* with him on the brief) for the plaintiff.

Alice Daniel, Assistant Attorney General; *Joseph I. Liebman*, Attorney in Charge, Field Office for Customs Litigation (*Edmund F. Schmidt* at the trial; *Susan Handler-Menahem* on the brief), for the defendant.

RE, Chief Judge: The question presented in this case pertains to the proper classification, for customs duty purposes, of imported merchandise described on the invoices as "Power Failure Lights." The power failure lights were classified by the customs officials as flashlights under item 683.70 of the Tariff Schedules of the United States (TSUS). Consequently, they were assessed with duty at the rate of 35 per centum ad valorem.

Plaintiff protests that classification and, hence, the rate of duty assessed. It contends that the imported power failure light is not within the common meaning of the term "flashlight," and that, for customs classification purposes, it is more than a flashlight. Accordingly, plaintiff maintains that the merchandise is properly classifiable under the tariff item for "(e)lectrical articles * * * not specially provided for," item 688.40, TSUS, as modified by T.D. 68–9, with a rate of duty of only 5.5 per centum ad valorem.

Originally, plaintiff claimed alternative classifications as follows:

(a) "[V]isual signaling apparatus * * * electrical," under item 685.70, as modified by T.D. 68–9, at the rate of 4 per centum ad valorem;

(b) "Portable electric lamps with self-contained electrical source * * * Other," under item 683.80 at the rate of 13.75 per centum ad valorem; or

(c) "Illuminating articles * * * of base metal * * * Other," under item 653.39 at the rate of 19 per centum ad valorem.

Plaintiff, however, does not press for classification under these alternative claims.

Plaintiff maintains that the evidence clearly establishes that the power failure light has at least the following three functions: First, as a visual warning signal device; second, as a fixturelike illuminating device, i.e., as a stationary light source; and third, as a flashlight.

Plaintiff submits that unless this court determines that "all but one of the above functions were incidental functions," the power failure light is not classifiable under (a), (b), or (c) above since they "are not sufficiently diverse to encompass the imported article." Hence, plaintiff contends that TSUS item 688.40 is the only tariff provision which fully describes the power failure light with its multiple functions.

The following are the pertinent provisions of the tariff schedules:

Classified under:

	"Portable electric lamps with self-contained electrical source, and parts thereof:	
683.70	Flashlights and parts thereof	35% ad val."

Claimed under:

"688.40	Electrical articles, and electrical parts of articles, not specially provided for	5.5% ad val."

It is conceded that the importations are portable; are illuminating articles not in chief value of brass; are electric; contain an electric light and self-contained electric source; and are not designed to be operated by propane or any other gas, or by compressed air, kerosene, or gasoline.

It is also conceded that when operating on direct current, the importations are used as small, battery-operated, portable electric lights for the purpose of illumination, and to provide a warning of alternating current failure, which defendant considers a subsidiary use. The direct current is supplied by a self-contained rechargeable battery. The defendant concedes that the pilot light may have a fugitive use to indicate that the self-contained batteries are being recharged, and that the alternating current is flowing. It also admits that in the event of alternating current power failure, the imported articles may be activated by the direct current supplied by the self-contained rechargeable battery.

It is agreed that the imported articles contain a relay and other

necessary components which permit their operation on both alternating and direct current, and that the pilot light operates only on an external alternating current.

In essence, plaintiff maintains that the power failure light cannot be classified as a flashlight under TSUS item 683.70 because it incorporates or contains nonsubordinate or coequal features or functions, in addition to those which bring an article within the common meaning of the term "flashlight."

Defendant, on the other hand, contends that the merchandise has been properly classified as a flashlight, which it states has been judicially determined to be "a small, battery-operated, portable electric light." In support, it cites *Biddle Purchasing Co.* v. *United States*, 48 Cust. Ct. 251, 257, C.D. 2345 (1962), *aff'd*, 50 CCPA 71, C.A.D. 823 (1963), and *Air-Sea Forwarders, Inc.* v. *United States*, 76 Cust. Ct. 268, C.D. 4665 (1976). The defendant submits that any additional features possessed by the power failure light are subsidiary, subordinate, and incidental to its functioning as a flashlight.

Essentially, the question presented is whether the merchandise is a flashlight within the eo nomine provision for flashlights, as classified by the Customs officials, or whether it is something more than a flashlight, as claimed by plaintiff. It is the determination of the court that the plaintiff has overcome the presumption of correctness which attaches to the classification of the Customs officials 28 U.S.C. 2635 (a). Plaintiff has succeeded in establishing that the imported power failure lights were incorrectly classified as flashlights, and should be properly classified as "(e)lectrical articles * * * not specially provided for."

At trial, plaintiff called Mr. Hitoshi Kubo, manager of the appliance department, Lighting Products Manufacturing Division of Sanyo Electric Co., Ltd., Hyogo, Japan, the designer of the power failure light. It also called Mr. Morton M. Tillman, vice president of sales for Sanyo Electric Inc., located in Moonachie, N.J. Defendant's witness was Mr. Thomas H. Nicholl, president and owner of Nicholl Brothers, Inc., a domestic manufacturer of battery-powered portable lights.

Numerous exhibits, 13 for plaintiff and 15 for defendant, were received in evidence, including representative samples of the imported merchandise. Among the exhibits examined by the court were several power failure lights, a variety of flashlights, an emergency exit light, and a demonstrator.

The importations consist of two Sanyo power failure lights, both of which were designed by Mr. Kubo. He said that except for packaging, they were identical. A small brochure in the box in which the merchandise was sold gives instructions as to its use. The following illustrations of the imported power failure lights are contained in the brochure:

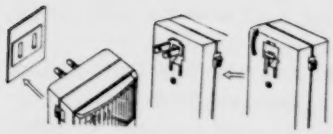

Fig 1

Note. Make sure that the switch is on CHG position.

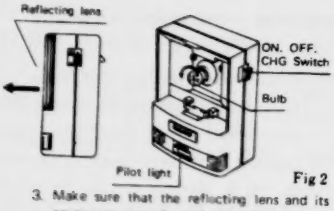

Fig 2

3. Make sure that the reflecting lens and its cover are properly replaced with the protruding grip on the bottom.

According to the brochure instructions, the built-in plug is inserted into a wall socket (fig. 1). By putting the switch in the upper (ON) position, the batteries are charged. A small pilot night light is lit while charging. Should there be a blackout, and the house current goes off, a relay will automatically switch on the power failure light.

Although the brochure states that "(t)o use as a portable flashlight, unplug the unit and switch on-off with the slide switch," Mr. Tillman, vice president of sales for Sanyo Electric Inc., explained that the statement was not consistent with his marketing approach. To recharge the batteries, the charging plug is pulled out from the rear of the unit and is plugged into an electric outlet (fig. 1).

An examination of the exhibits shows they are lightweight and can be held in the palm of the hand. Their dimensions are approximately 3½ inches high, 2½ inches wide and 1½ inches deep. The back and sides appear to be of plastic. Sanyo's frontal identification reads "Power Failure Lite." The descriptive wording on the back indicates the units are rechargeable. They have a plug in the back and a side switch designated "ON CHG OFF."

The picture of the model and advertising copy state that the "Power Failure Lite" is a night light, a power failure light and a conventional flashlight for use "during emergencies, anytime-anywhere."

Mr. Kubo described the importations as power failure lights which he had designed and developed. The witness characterized the use of Sanyo's power failure light as follows: (1) To notify or warn that there has been a power failure; (2) as a stationary light source after a power failure; and (3) to carry around after a power failure. Mr. Kubo stressed that the principal, primary intended purpose of these lights is notification of a power failure.

The witness testified that he had also designed Sanyo's rechargeable flashlights. They are used where there is no outlet, and for the purpose of lighting up something in the distance. The features of a power failure light could not be built into the rechargeable flashlight as shaped. There is also a difference in charging time. The power failure light, when fully charged, operates for 50 minutes, and takes over 32

hours to recharge fully. The flashlights, on the other hand, emit light for 80 minutes and take 16 hours to recharge.

Mr. Tillman, vice president of sales for Sanyo, described the total concept of plaintiff's power failure light to be an emergency device in the event of power failure. He stated that his company presents this device as a power failure light, and as a safety device. The witnesss explained that when there is a power failure, the Sanyo light comes on automatically. Since it is sold for use in a living room, reception room, a doctor's or dentist's office, it is designed to fit unobtrusively into a wall socket, and must be as flush as possible against the wall.

Mr. Tillman differentiated between his company's power failure light and its rechargeable flashlight. The type of light emitted by the power failure light has a wide radius. The flashlight has a concentrated beam of light. The witness said that if there were a power failure during daylight, the power failure light would still function, even though illumination might not be needed. He described a power failure alarm made in Japan for the Oreck Corp. as the same in principle but a more sophisticated device audio in nature. The various Sanyo power failure lights, however, are strictly visual devices. Mr. Tillman testified that the primary function of both is to give warning of a power failure and/or interruption. He stated that, among other differences as to convenience and cost, the power failure lights are too bulky to use as substitutes for flashlights.

Defendant's witness, Mr. Nicholl, is president and owner of Nicholl Brothers, a domestic firm primarily engaged in the manufacture of battery-operated portable lights. The witness, an engineer, testified that he created most of the products that his company manufactures, and was generally familiar with flashlights that are marketed in this country.

Mr. Nicholl agreed with the Webster's Dictionary definition of a flashlight as "a small portable electric light with a self-contained electrical source." He described the importation as a flashlight. The witness agreed that it was a portable electric powered light. He did not consider either charging or operation time to be determinative as to whether a small portable electric light is a flashlight.

Mr. Nicholl described three of defendant's exhibits as flashlights of different shapes, one of which was intended to be mounted on a wall or in a car. He described his company's Dark Blazer PF2 power failure light, which was not as yet available on the market, as a portable rechargeable flashlight which would be marketed as a regular flashlight. The exhibit itself, however, bears the designation "Night Light." The witness testified that the General Electric Security Light, a power failure light, was similar to the Dark Blazer PF2. His testimony in

effect indicated that all flashlights are not night lights, and that a light can be both a flashlight and a power failure light.

As correctly stated by the defendant, the term "flashlight" has been judicially determined to be "a small, battery-operated, portable electric light." This court recently reaffirmed that definition in *Air-Sea Forwarders, Inc.* v. *United States*, 76 Cust. Ct. 268, C.D. 4665 (1976), wherein a plastic battery and switch case, and a metal cap with gooseneck extension and lamp socket, were classified under TSUS item 683.70 as flashlights. Plaintiff claimed proper classification under TSUS item 683.80 as other portable electric lamps. The evidence established that, after importation, the articles were assembled, equipped with a lens-end type bulb, and sold to purchasers who supplied "C" type batteries, and used them as inspection lights in small, inaccessible areas, Judge Richardson, in holding that the importations were within the broad, nonuse-oriented common meaning of "flashlight," stated:

> The imported article is a flashlight within the meaning of item 683.70, in the opinion of the court. Webster's Third New International Dictionary (1961), contemporaneous with the promulgation of the TSUS, defines the term flashlight as "a small battery-operated portable electric light." This definition, cited approvingly by this court in *Biddle Purchasing Co.* v. *United States*, 48 Cust. Ct. 251, 257, C.D. 2345 (1962), *aff'd*, 50 CCPA 71, C.A.D. 823 (1963), is expressive of the common meaning of the term flashlight. And it is to be noted that this definition is broad based, and is not circumscribed by usage or any physical devices as would influence usage. Hence, as the evidence in this record demonstrates, a wide variety of articles are bought, sold, and known as flashlights.
>
> With respect to the article in issue, there can be no doubt but that it fits comfortably within the ambit of the definition. It is small, battery-operated, and portable, and is, a fortiori, an electric light. The fact that the imported article is also known specifically as an inspection light does not change its character as a flashlight. This description only serves to emphasize its adaptation to a specific use, as is the case with other types of flashlights. It is, nevertheless, a species of flashlight. And the instant record makes abundantly clear the fact that within the trade and commerce of the United States the imported article and other articles of this class and kind are marketed as, and considered to be, inspection flashlights. (76 Cust. Ct. at 271–272.)

The defendant urges the application of the well settled principle of customs law that an eo nomine designation of an article includes all forms of the article, and asserts that the power failure light is merely an improvement of the basic flashlight. *T. M. Duche & Sons, Inc., et al.* v. *United States*, 44 CCPA 60, C.A.D. 638 (1957); *Crosse & Blackwell Co.* v. *United States*, 36 CCPA 33, C.A.D. 393 (1948); *Nootka Packing Co. et al.* v. *United States*, 22 CCPA 464, T.D. 47464 (1935).

After a careful examination of the imported power failure lights, all of the other exhibits, and the testimony of the witnesses, the court has concluded that the power failure lights are not embraced by the tariff designation "flashlight." The imported power failure light is neither a flashlight within the common meaning of the term, nor an improvement on a flashlight. It is a new article of commerce known as a power failure light.

In the *Air-Sea Forwarders, Inc.* case, the inspection light in the language of the court was "a species of flashlight." Indeed, in the trade and commerce of the United States, the articles were marketed and "considered to be, inspection flashlights." It is particularly noteworthy that although adapted to a specific use, the inspection flashlight performed but a single function. In the present case, however, the exhibits and the record leave no doubt that the power failure light has multiple functions. It is used to alert or warn that there has been a power failure, as a stationary light source after a power failure, and as a portable light source. Unlike the inspection light of the *Air-Sea Forwarders, Inc.* case, the power failure light at bar cannot be said to be a species of flashlight that "fits comfortably within the ambit of the definition."

Mr. Kubo distinguished the aims or purposes of the power failure light and those of a flashlight. He testified that in designing the power failure light, he had in mind its use primarily to alert that there had been a power failure. If a power failure occurred at night, the light can be carried for purposes of illumination. Mr. Kubo indicated, however, that it is better to keep the light in the outlet, even after a power failure, since the surrounding area would be lit up making it easier for people to move about. He added that, unlike the power failure light, the aim of a flashlight is to light up something in the distance, so that the light is focused as much as possible.

Plaintiff contends it has established that the power failure light with its multiple functions is properly classifiable under TSUS item 688.40 which embraces "(e)lectrical articles * * * not specially provided for." On the record before the court, it is clear that the power failure light is a multifunction article whose power failure warning feature cannot be considered subsidiary, subordinate or incidental to any function as a flashlight. It is well settled that, for tariff purposes, a combination or multifunction article is not classifiable under a specific statutory provision which describes only one of those features or functions since it is more than the article described. Consequently, the power failure light is more than a flashlight, as classified by the customs officials.

In *Robert Bosch Corp. et al.* v. *United States*, 63 Cust. Ct. 96, 103–104, C.D. 3881 (1969), this court described the "more than" principle of customs law as follows:

> The principle is well settled that where an article is in character or function something other than as described by a specific statutory provision—either more limited or more diversified—and the difference is significant, it cannot find classification within such provision. It is said to be more than the article described in the statute. *Cragston Corporation* v. *United States*, 51 CCPA 27, C.A.D. 832 (1963); *United States* v. *The A. W. Fenton Company, Inc.*, 49 CCPA 45, C.A.D. 794 (1962); *Garrard Sales Corp.* v. *United States, supra* [35 CCPA 39, C.A.D. 369 (1947)]; and *Hirsch & Co. et al.* v. *United States*, 4 Ct. Cust. Appls. 82, T.D. 33365 (1913)."

The statement was expressly cited and relied upon by this court in *Dollar Trading Corp.* v. *United States*, 349 F. Supp. 1395, 1399, 67 Cust. Ct. 308, 314, C.D. 4290 (1971). The opinion in the *Dollar Trading Corp.* case was affirmed and adopted by the Court of Customs and Patent Appeals as its own. *Dollar Trading Corp.* v. *United States*, 468 F. 2d 631, 60 CCPA 10, C.A.D. 1074 (1972). See also *United States* v. *Acec Electric Corporation*, 474 F. 2d 1009, 60 CCPA 113, C.A.D. 1091 (1973); *Fedtro, Inc.* v. *United States*, 449 F. 2d 1395, 59 CCPA 16, C.A.D. 1028 (1971). Writing on the "more than" doctrine, the Court of Customs and Patent Appeals has stated that "each case must in the final analysis be determined on its own facts. See *United Carr Fastener Corp.* v. *United States*, 54 CCPA 89, C.A.D. 913 (1967), and the cases cited therein." *E. Green & Son* v. *United States*, 450 F. 2d 1396, 59 CCPA 31, C.A.D. 1032 (1971).

An application of the "more than" principle is found in *Oxford International Corp.* v. *United States*, 70 Cust. Ct. 217, C.D. 4433 (1973). In that case, battery-operated horn-lights, designed and used solely on the handlebars of bicycles, were classified as parts of bicycles under TSUS item 732.36. Plaintiff did not deny that the horn-lights were parts of bicycles, but claimed that the merchandise was also electrical sound or visual signalling apparatus and, by reason of general interpretative rule 10(ij), was classifiable under TSUS item 685.70. General interpretative rule 10(ij) provides that—

> A provision for "parts" of an article covers a product solely or chiefly used as a part of such article, but does not prevail over a specific provision for such part.

The court found that although the horn portion of the combination article was an electrical sound signaling device, the light portion did more than merely serve as a signal in that it primarily functioned as an illuminating device. Consequently, the court determined that the horn-lights possessed an important illuminating feature at least coequal to their signaling function, thus making them more than signaling apparatus, and held them to be properly classifiable as parts of bicycles.

Other cases which illustrate the "more than" doctrine are *Pollard*

Bearings Corporation v. *United States*, 511 F. 2d 568, 62 CCPA 61, C.A.D. 1146 (1975) (fan and pump shaft bearings more than parts for water pumps); *Montgomery Ward & Co.* v. *United States*, 73 Cust. Ct. 187, C.D. 4573 (1974) (combination article containing a radio, phonograph and tape player, held more than a radio-phonograph).

In customs classification cases it has often been noted that a representative sample of the merchandise is a potent witness. *Karoware, Inc.* v. *United States*, 564 F. 2d 77, 65 CCPA 1, C.A.D. 1197 (1977); *United States* v. *The Twin Wintons*, 535 F. 2d 636, 63 CCPA 84, C.A.D. 1171 (1976). As stated in the *Oxford International* case, *supra*, "the character and design of the sample itself may compel a finding as to the primary use of the merchandise." 70 Cust. Ct. at 223. This principle is also equally applicable here. On all of the evidence presented, it is the determination of the court that plaintiff has met its burden of proving that the Government's classification of the imported merchandise as flashlights, within the purview of TSUS item 683.70, was erroneous. A careful examination reveals that the importations are essentially power failure lights with additional functions.

Having concluded that the importations are more than flashlights, the court must consider plaintiff's claim that the power failure lights are properly classifiable under TSUS item 688.40 as "(e)lectrical articles * * * not specially provided for." The evidence clearly establishes that the imported merchandise has at least three functions. It is a visual warning signal device, a fixturelike illuminating device (in that it was designed to function as a stationary light source), and a flashlight. The illuminating function makes the power failure light more than an article contemplated by TSUS item 685.70 which covers electrical visual signaling apparatus. The power failure warning device function and the flashlight function make the imported article more than an electric lamp under item 683.80, or an illuminating article under item 653.39.

Plaintiff maintains that the imported light is a unique article of special design and, consequently, is a new and distinct commercial article requiring a classification that encompasses more than one function and which most closely describes it as a single entity. The classification question in the case at bar is analogous to that in *Mattel, Inc.* v. *United States*, 76 Cust. Ct. 84, C.D. 4639 (1976). In *Mattel*, articles invoiced as voice units, which were inserted into dolls and other objects to reproduce prerecorded sentences or sayings, were classified as parts of toys, not specially provided for, under TSUS item 737.90. They were claimed to be properly classifiable as phonographs under TSUS item 685.32. The court found that the imported

voice unit had a permanently affixed interleaved record, which did not provide merely an auxiliary or incidental function but was at least of equal importance to the sound reproducing or phonographic portion of the article. In holding that the imported articles had been properly classified as parts of toys, Judge Maletz stated:

> Accordingly, it must be concluded that the article in controversy is not just another version or model of a phonograph. It is rather a new and distinct commercial entity containing the elements of both a phonograph and a record which, by reason of their special design and permanent attachment, have merged into a single unit possessing certain unusual, if not unique, features. Consequently, this new entity is something more than as well as other than the phonographs encompassed by item 685.32 and is not classifiable thereunder. See e.g., *United States* v. *A. W. Fenton Co.*, 49 CCPA 45, C.A.D. 794 (1962); *United States* v. *New York Merchandise Co.*, 58 CCPA 53, C.A.D. 1004, 435 F. 2d 1315 (1970); *United States* v. *Acec Electric Corp.*, 60 CCPA 113, C.A.D. 1091, 474 F. 2d 1009 (1973); *United States* v. *Howard Hartry, Inc.*, 60 CCPA 140, C.A.D. 1099, 477 F. 2d 1400 (1973). As our appellate court recently reiterated, merchandise which in fact constitutes more than a particular article is not classifiable as that article. *Pollard Bearings Corp.* v. *United States*, 62 CCPA 61, 64, C.A.D. 1146, 511 F. 2d 568, 571 (1975). See also e.g., *United States* v. *Flex Track Equipment Ltd.*, 59 CCPA 97, C.A.D. 1046, 458 F. 2d 148 (1972) * * *. 76 Cust. Ct. at 91.

The power failure lights do not provide merely an auxiliary or incidental function to the flashlight function. From an examination of the article, and the testimony of Mr. Kubo which the court finds credible and reliable, the court has concluded that the power failure warning function is its primary function or purpose. Even if the power failure warning function were to be at least a coequal nonilluminating function, it would still prevent classification under a provision which covers only one of those functions. See *The Ashflash Corporation* v. *United States*, 412 F. Supp. 585, 76 Cust. Ct. 112, C.D. 4643 (1976), and cases cited therein.

In *The Ashflash Corporation* case, the question presented pertained to the proper classification of blinker lanterns which had been classified as portable electric lamps under TSUS item 683.80. As in the present case, plaintiff claimed that they were properly classifiable as "(e)lectrical articles * * * not specially provided for" under TSUS item 688.40. In sustaining plaintiff's claim, the court held that the blinker lanterns were portable battery-operated combination articles comprised of a searchlight portion for illumination, and an automatic signal-warning red flasher for emergency signaling; that the imports served two independent and coequal functions, as a searchlight and

as a signal-warning flasher; and that the latter function was not incidental, auxiliary or subordinate to the searchlight function. The blinker lanterns, therefore, were more than the portable electric lamps covered by item 683.80, as classified. Consequently, as combination or multifunction articles they were properly classifiable and dutiable as electric articles not specially provided for under item 688.40, as claimed.

In an earlier case, *Fedtro, Inc.* v. *United States*, 376 F. Supp. 1398, 72 Cust. Ct. 267, C.D. 4548 (1974), the question presented was whether a CH–ACD battery charger was merely a rectifying apparatus, as classified under TSUS item 682.60, or whether, as urged by plaintiff, its testing element removed it from that classification because it was more than a rectifying apparatus. In *Fedtro*, again classification was claimed under item 688.40, TSUS, as "(e)lectrical articles * * * not specially provided for." The court found that the battery charger performed the dual functions of testing and charging batteries. Hence, it was established that it had a use in addition to its use as a battery charger. In holding that the merchandise was therefore properly dutiable under item 688.40, as claimed by plaintiff, Judge Newman stated:

> To reiterate, according to the operating instructions, 1.5 volt batteries should first be tested to determine whether or not they are rechargeable, which prevents one from attempting to recharge "dead" or fully charged batteries. This procedure points up that there are circumstances when the testing feature would be utilized, but the charging feature would not be utilized. Additionally, the testing feature indicates whether a battery requires merely a "booster" charge or a full charge, and such feature reveals whether the recharge was effective. Thus, it is evident, that the tester and charger complement each other. Plainly, then, the testing element of the CH–ACD battery charger (which does not convert a.c. to d.c.) is indeed a highly significant feature of the article and, * * * makes the article something more than "rectifying apparatus." The cases relied upon by the Government, cited supra, have been carefully considered, but as I do not view the testing feature as merely incidental or auxiliary, those cases are not deemed controlling relative to the present merchandise. Since there is no dispute that the merchandise is electrical, it is properly dutiable under the provision in item 688.40, TSUS for electrical articles, not specially provided for, as claimed by plaintiff. 72 Cust. Ct. at 275.

The power failure light is an electrical multifunction article. In accordance with the foregoing cases, it is clear that it is classifiable under TSUS item 688.40 as "(e)lectrical articles * * * not specially provided for."

Although plaintiff has met its burden of proof, the defendant

contends that a claim under a "not specially provided for" clause itself imposes upon plaintiff a burden of proof to establish prima facie that the article is in fact not provided for elsewhere. Furthermore, the defendant asserts that that burden cannot be discharged simply by establishing that the article is described by the remainder of the language of the "not specially provided for" provision. The court disagrees, and adopts the view expressed by Judge Newman, who, in rejecting a similar contention in *E. R. Squibb & Sons, Inc.* v. *United States*, 75 Cust. Ct. 193, C.R.D. 75–7 (1975), wrote:

> It is, of course, fundamental that plaintiff has the burden of establishing not only that the Government's classification is erroneous, but also of establishing that the claimed classification is correct. *United States* v. *L. Batlin & Son, Inc.*, 61 CCPA 17, C.A.D. 1111, 487 F. 2d 916 (1973); *United States* v. *New York Merchandise Co., Inc.*, 58 CCPA 53, C.A.D. 1004, 435 F. 2d 1315 (1970). However, I am unable to agree with defendant's contention that plaintiff has the burden of negating the possible applicability of tariff provisions, other than item 750.40 merely because item 688.40 contains a "not specially provided for" clause. In *Pacific Fast Mail* v. *United States*, 68 Cust. Ct. 41, 49, C.D. 4333, 338 F. Supp. 506 (1972), the court rejected a similar contention by defendant, holding that where the plaintiff has presented a prima facie showing that the Government's classification is erroneous and the claim of the protest is correct, the defendant is charged with the burden of going forward with proof to negate plaintiff's case, either by showing that plaintiff's proof is insufficient or by proving that a more appropriate alternative provision is applicable. And cf. *L. Batlin & Son, Inc.*, *supra*.
>
> Accordingly, if the Government's classification in this case is proven erroneous, and if plaintiff establishes the applicability of the claimed provision, the burden of proof shifts to defendant to affirmatively establish the propriety of any asserted alternative classification. However, defendant has not asserted any alternative classification in its answer. Consequently, there is no issue concerning any alternative classification before the court. 75 Cust. Ct. at 195–196.

In view of the foregoing, it is the determination of the court that the imported power failure lights have been erroneously classified as flashlights, and are properly classifiable under TSUS item 688.40, as modified, as "(e)lectrical articles * * * not specially provided for," with duty at the rate of 5.5 per centum ad valorem.

Judgment will be entered accordingly.

(C.D. 4856)

SIEMENS AMERICA, INC., PLAINTIFF *v.* UNITED STATES, DEFENDANT

Surge Voltage Protectors

Consolidated Court No. 72-5-01093

APPARATUS BASED ON THE USE OF RADIATIONS FROM RADIOACTIVE SUBSTANCES—ITEM 709.66, TSUS—"BASED ON"

Congress, by using the words "based on" in item 709.66, TSUS intended to embrace apparatus in which radiation from radioactive substances is its sine qua non, viz, the radioactive substance must be a fundamental and essential element or constituent of the apparatus.

SAME—GAS TUBE SURGE VOLTAGE PROTECTORS

The record fails to establish that the radioactive substance contained in the imported gas tube surge voltage protectors constitutes a fundamental and essential element or constitutent of the devices. Although plaintiff proved that the radioactive substance preionizes the inert gas in the tubes and helps stabilize the breakdown voltage, the evidence further shows that the gas ionizes when voltage is applied irrespective of the presence of a radioactive material; that breakdown voltage is determined primarily by the electrode spacing and gas fill pressure, rather than radiation; that many SVP tubes are manufactured without radioactive materials; and that the inclusion of a radioactive substance in the present tubes was not essential to their basic function of overvoltage protection. Under these facts and circumstances, the court finds that the imports are not classifiable under item 709.66, TSUS, as apparatus based on the use of radiations from radioactive substances. Cf. *Pharmacia Laboratories, Inc.* v. *United States*, 67 CCPA—, C.A.D. 1235, 609 F. 2d 491 (1979).

COMMON MEANING

In the absence of a special commercial designation the language of a tariff statute is to be construed in accordance with its common meaning. Moreover, the common meaning of a tariff term is a matter of law to be determined by the court; and in making such determination, the court may rely upon its own understanding of the word or term used and may consult standard lexicographic and scientific authorities. Further, the testimony of witnesses respecting common meaning is advisory only and has no binding effect on the court. *United States* v. *National Carloading Corp. et al.*, 48 CCPA 70, C.A.D. 767 (1961); *United States* v. *E. Besler & Company et al.*, 64 CCPA 121, 124, C.A.D. 1193, 557 F. 2d 270 (1977); *United States* v. *Corning Glass Works*, 66 CCPA —, C.A.D. 1216, 586 F. 2d 822 (1978); *Ozen Sound Devices* v. *United States*, 67 CCPA —, C.A.D. 1246, — F. 2d — (1980).

SAME—TECHNICAL TERMS

Where the common meaning of a technical term is in issue, reliance should not be confined to general lexicons, but technical dic-

tionaries should be consulted. *Brown Boveri Corp. et al.* v. *United States*, 53 CCPA 19, C.A.D. 870 (1966); *United States* v. *The Spiegel Bros. Corp.*, 51 CCPA 69, C.A.D. 839 (1964); *Firth Sterling, Inc.* v. *United States*, 48 CCPA 130, C.A.D. 779 (1961); *F. W. Woolworth Company* v. *United States*, 67 Cust. Ct. 9, C.D. 4245 (1971).

COMMON MEANING—"ELECTRON TUBE"—ITEM 687.60, TSUS

The lexicographic authorities relied upon by plaintiff define "electron tube" in terms of rudimentary but essential features: an airtight enclosure, evacuated or gas-filled, providing a medium for the flow and conduction of electrons between two electrodes. The SVP tubes satisfy these basic criteria of an electron tube.

EO NOMINE DESIGNATION—SCOPE OF

An eo nomine designation without limitation includes all forms of the article. *United States* v. *National Carloading Corp. et al.*, 48 CCPA 70, C.A.D. 767 (1961). Hence, the eo nomine provision for electronic tubes in the superior heading to item 687.60 includes all forms of such tubes.

RELATIVE SPECIFICITY—GENERAL INTERPRETATIVE RULE 10(c)

Under rule 10(c), the provision that more specifically describes the SVP tubes is "the item having requirements which are 'more difficult to satisfy'." *F. L. Smidth & Company* v. *United States*, 56 CCPA 77, 85, C.A.D. 958, 409 F.2d 1369 (1969); *Oxen Sound Devices* v. *United States*, 67 CCPA —, C.A.D. 1246, — F.2d — (1980). The eo nomine provision for "electronic tubes" in item 687.60, TSUS, is plainly more restrictive and "difficult to satisfy" than the provision for "apparatus * * * for the protection of electrical circuits" in item 685.90, TSUS.

[Judgment for plaintiff.]

(Decided May 13, 1980)

Freeman, Meade, Wasserman & Schneider, Esqs. (Messrs. *Louis Schneider* and *Kenneth Nathan Wolf* of counsel) for the plaintiff.

Alice Daniel, Assistant Attorney General, *Joseph I. Liebman*, Attorney in Charge, Field Office for Customs Litigation, and *Madeline B. Kuflik*, trial attorney, Esqs., for the defendant.

NEWMAN, Judge: In these consolidated cases, plaintiff challenges the classification by Customs of certain gas tube surge voltage protectors (SVP's) exported from West Germany on various dates from 1969 to 1978, and entered at the port of New York.

The merchandise in issue was classified under the provision in item 685.90 of the Tariff Schedules of the United States (TSUS) for "other electrical apparatus * * * for the protection of electrical circuits" and assessed duty at the rate of 14, 12, 10, or 8.5 per centum ad valorem, depending upon the year of entry, pursuant to T.D. 68-9. Plaintiff claims that the imports are properly dutiable under the provision in item 709.66, TSUS, for "Apparatus based on the use of radiations from

radioactive substances" at the rate of 9.5, 8, 7, or 6 per centum ad valorem, depending upon the year of entry, pursuant to T.D. 68-9.[1] Alternatively, plaintiff claims that the merchandise is dutiable as other electronic tubes under item 687.60, TSUS, at the rate of 10, 8.5, 7, or 6 per centum ad valorem, depending upon the year of entry, pursuant to T.D. 68-9.

Plaintiff's alternative claim under item 687.60, TSUS, is sustained, for the reasons indicated hereinafter.

STATUTES INVOLVED

Tariff Schedules of the United States, 19 U.S.C. 1202:

Classified under:

Schedule 6, Part 5.—Electrical Machinery and Equipment:

Part 5 headnotes:

1. This part does not cover—

* * * * * * *

(vi) electrical instruments and apparatus provided for in schedule 7.

* * * * * * *

685.90	Electrical switches, relays, fuses, lightning arresters, plugs, receptacles, lamp sockets, terminals, terminal strips, junction boxes and other electrical apparatus for making or breaking electrical circuits, for the protection of electrical circuits, or for making connections to or in electrical circuits; switchboards (except telephone switchboards) and control panels; all the foregoing and parts thereof	[14, 12, 10, or 8.5% ad val., depending on the year of entry]

Claimed under:

Schedule 7, part 2, subpart B.—Medical and

[1] Plaintiff (brief, p. 8, n. 3) has abandoned this claim respecting SVP tube No. A52-C350X. Accordingly, these consolidated cases are dismissed as to that merchandise.

Surgical Instruments and Apparatus; X-Ray Apparatus:

* * * * * * *

Apparatus based on the use of X-rays or of the radiations from radioactive substances, whether for medical, industrial, or other uses, and parts thereof:

* * * * * * *

709.66	Apparatus based on the use of radiations from radioactive substances, and parts thereof	[9.5, 8, 7, or 6% ad val., depending on the year of entry]

Alternatively claimed under:

Schedule 6, part 5.—Electrical Machinery and Equipment

* * * * * * *

Electronic tubes (except X-ray tubes); photocells; transistors and other related electronic crystal components; mounted piezo-electric crystals; all the foregoing and parts thereof:

* * * * * * *

687.60	Other	[10, 8.5, 7, or 6% ad val., depending on the year of entry]

THE FACTS[2]

The SVP's in issue are hermetically sealed gas discharge tubes consisting of two electrodes, a glass insulator filled with argon (an inert gas), and a minute quantity of promethium 147 (a radioactive material). In the electronics field, SVP tubes are called cold cathode tubes, gas discharge tubes and gas spark gap tubes (R. 38). The function of the subject SVP tubes is to provide a conductive path

[2] The record consists of two witnesses for plaintiff: Uwe Renken (plaintiff's import-export traffic manager) and Ludwig Rademacher (plaintiff's production manager in Sonora, Mexico) plus 10 exhibits; and 3 witnesses for defendant: Richard Knapp (an electrical engineer and supervisor of special services at New York Telephone), Lewis Douglas Sweeney (sales manager for Joslyn Electronics, a supplier of surge voltage protectors, and formerly plaintiff's operations manager for surge voltage protectors and mylar capacitors), and Leonard Strauss (professor of electrical engineering and electrophysics at the Polytechnic Institute of New York) plus 3 exhibits.

for unwanted and excessive voltage transients,[3] thereby preventing the transient energy and associated voltages from damaging electric circuitry and causing harm to personnel.

SVP's are designed to switch rapidly at a specific voltage level, referred to as the breakdown voltage, from a nonconductive state to a conductive state when subjected to an excessive voltage transient. As the voltage across an SVP tube increases, ionization of the inert gas occurs and the tube becomes conductive. The flow of electrons within the tube cannot be controlled. Promethium 147, a radioactive material contained within the instant tubes (except tube No. A52-C350X), emits beta particles (radiation) which preionize or facilitate the ionization of the gas in the tubes and stabilize the breakdown voltage. However, the breakdown voltage is a design parameter controlled primarily by the electrode spacing and gas fill pressure of the SVP tubes, and there are many surge-protective tubes manufactured without radioactive materials.

QUESTION PRESENTED

Are the imported SVP's properly classifiable under either item 709.66, TSUS, or item 687.60, TSUS, as alternatively claimed by plaintiff?

OPINION

I

Since the record clearly establishes that the SVP tubes are used for the protection of electric circuits[4] (R. 54, 172–173, 192, defendant's exhibit A), the merchandise is described in item 685.90, TSUS, as classified by Customs. However, classification under item 685.90 is precluded by headnote 1(vi) of schedule 6, part 5 if the merchandise is described in item 709.66, TSUS, the provision primarily claimed by plaintiff to be applicable.

To be classifiable under item 709.66, the SVP tubes must be "based on the use of radiations from radioactive substances". As noted supra, the imported tubes contain the radioactive substance promethium 147 (R. 36–37, 146). Nevertheless, I have concluded that the imports are not based on the use of radiations from radioactive substances.

In Webster's New International Dictionary (2d ed. 1957), the word "base" is defined as:

2. Figuratively, the fundamental or essential part of a thing;

[3] These voltage transients are generated by both natural and manmade sources, such as lightning, interruption of current in motors, transformers, solenoids and relays, powerline shorts and other sources (defendant's exhibit B, p. 2).

[4] The fact that the SVP's are used for the protection of electric circuits is conceded in plaintiff's exhibit 4 (p. 2), a letter from plaintiff's former counsel to the Bureau of Customs (now Customs Service) requesting a classification ruling for the tubes.

> essential principle; groundwork. * * * 4. a. The main or chief ingredient of anything, viewed as its fundamental element or constituent.

Thus, the language "based on" as contained in item 709.66 evinces congressional intent to embrace merchandise in which radiation from radioactive substances is its sine qua non.[5] I find that radiation is not the sine qua non of the SVP tubes in issue, since the promethium 147 is not a fundamental and essential constituent of these tubes.

The record is clear that the specific function of the subject SVP tubes is to provide a conductive path for excessive voltage transients, and that such function of overvoltage protection is not based upon the use of a radioactive material (R. 51–52, 194). Promethium 147, the radioactive component in the imported tubes, preionizes the gas in the tubes[6] and stabilizes the breakdown voltage[7] (R. 125–126, 137, 147–148, 170, 193, 198–199, 214, 226). Nevertheless, the unrebutted testimony of defendant's expert witnesses shows that the gas in the SVP tubes ionizes when voltage is applied, irrespective of the presence of a radioactive substance (R. 171–172, 227–228), and that speed of ionization and a specific breakdown voltage can be achieved by means other than the use of radioactive substances. Defendant's witnesses testified, without contradiction or rebuttal, that breakdown voltage in the SVP tubes is determined primarily by the electrode spacing and the gas fill pressure, rather than radiation (R. 126–127, 191, 194–195, 198–200, 202, 212). Significantly, that testimony is corroborated by plaintiff's own promotional brochure (defendant's exhibit B, p. 2), which states:

> The DC breakdown voltage is a design parameter controlled by the manufacturer, and *is a function primarily of the electrode spacing and the gas fill pressure.* [Italic added.]

Similarly, plaintiff's exhibit 12, a technical data sheet concerning Joslyn miniature gas-tube surge protectors, reads:

> When a surge exceeds the breakdown voltage of the tube (surge sparkover voltage), the gap becomes intensively ionized, and conduction takes place within a fraction of a microsecond. The ionized protector becomes a short circuit and remains so until the voltage returns to normal. *Ionization and deionization are extremely fast due to the type of gas fill and physical configuration used.* [Italic added.]

---

[5] See the discussion of apparatus based on the use of radiations from radioactive substances in the Summaries of Trade and Tariff Information (1970), schedule 7, vol. 2, p. 95.

[6] The promethium 147 provides a certain level of energy to the gas which merely increases the speed of ionization (R. 198–199). This function of the radioactive material is analogous to the function of a catalyst in a chemical reaction. (See plaintiff's exhibit 3, p. 2.)

[7] In technical terms, the D.C. breakdown voltage is defined as: "The voltage at which an abrupt transition of the gap resistance from a practically infinite value (>10,000 megohm) to a relatively low value (approximate 0 Ohm) occurs, when subject to a slowly rising voltage (1,000 V/sec or less)". (Defendant's exhibit B, p. 7.) More simply stated, the breakdown voltage is "the point at which the gas turns from a nonconductive to a conductive state" (R. 124).

Like the Siemens tubes in issue, the Joslyn tubes described in plaintiff's exhibit 12 contain a radioactive material (tritium) (R. 164–166). However, the radioactive component of the Siemens and Joslyn tubes is not mentioned in the descriptive promotional literature (defendant's exhibit B and plaintiff's exhibit 12). Hence, it is evident that neither plaintiff nor Joslyn regarded the radioactive component of its tubes as an important feature.

Concededly, there are many SVP tubes manufactured without radioactive materials. For example, plaintiff admits (reply brief, p. 2, n. 1) that SVP tube model No. A52–C in entry No. K213581 does not contain any radioactive material. Moreover, defendant's exhibit C, the IEEE Standard Test Specifications for Gas Tube Surge-Protective Devices (1977), published by the Institute of Electrical and Electronics Engineers, Inc., states (at p. 7):

> 3.2.3 Radiation. *Some* devices *may* contain irradiated material; when these are used in nuclear facilities, special consideration may be necessary. [Italic added.]

This statement clearly demonstrates that only some gas tube surge-protective devices utilize radioactive substances. Significantly too, the definition of "gas tube surge arrester" found in the IEEE test specifications (exhibit C, p. 6) does not even mention or imply the use of radiation (R. 133). Plainly, then, the inclusion of a radioactive substance in the present SVP tubes was not essential to their basic function of over-voltage protection.

As analogous to the situation presented in the instant case, defendant calls attention to *Pharmacia Laboratories, Inc.* v. *United States*, 67 CCPA —, C.A.D. 1235, 609 F. 2d 491 (1979), wherein the sole issue presented was whether certain imported radioimmunoassay diagnostic test kits were classifiable as "usefully radioactive compounds" under item 494.50, TSUS. Citing Judge Watson's finding that the kits contained nonradioactive components which were as important as the radioactive component, Chief Judge Markey concluded that the kits could not be classified under item 494.50. Here, respecting even the characteristic of breakdown voltage, the record shows that electrode spacing and gas fill pressure are the primary determinants.

In sum, plaintiff's proof that the imported SVP tubes utilize a radioactive material is not sufficient to sustain its burden of proof under item 709.66 absent further evidence showing that the radioactive material is a fundamental and essential component of the merchandise. In the present case, it would require a substantial magnification of the role played by the promethium 147 to find that the SVP tubes are "based on the use of radiations from radioactive substances," within the purview of the statute. Accordingly, plaintiff's primary claim under item 709.66, TSUS, is without merit.

II

We now turn to plaintiff's alternative claim that the merchandise falls within the eo nomine provision for electronic tubes in item 687.60, TSUS.

Fundamentally, in the absence of a special commercial designation, the language of a tariff statute is to be construed in accordance with its common meaning. Moreover, the common meaning of a tariff term is a matter of law to be determined by the court; and in making such determination, the court may rely upon its own understanding of the word or term used and may consult standard lexicographic and scientific authorities. Further, the testimony of witnesses respecting common meaning is advisory only and has no binding effect on the court. *United States* v. *National Carloading Corp. et al.*, 48 CCPA 70, C.A.D. 767 (1961); *United States* v. *E. Besler & Company et al.*, 64 CCPA 121, C.A.D. 1193, 557 F. 2d 270 (1977); *United States* v. *Corning Glass Works*, 66 CCPA —, C.A.D. 1216,586 F. 2d 822 (1978); *Ozen Sound Devices* v. *United States*, 67 CCPA —, C.A.D. 1246, — F. 2d — (1980).

As indicative of the common meaning of the term "electronic tube", defendant quotes the following definitions:

Brittania World Language Dictionary, volume 51 at p. 407:

> Electron tube is a high vacuum tube in which a stream of electrons is emitted from a heated cathode and subjected to the controlling action of a grid which amplifies and directs the current.

Webster's Third New International Dictionary, Unabridged (1963):

> An electronic device in which conduction by electrons takes place through a vacuum or a gaseous medium between a sealed glass or a metal container, and which has various uses (as amplification of electrical energy and the conversion of alternating current to direct current and vice versa) that are based on the controlled flow of electrons.

Predicated upon the above-quoted definitions and the testimony of its expert witnesses, defendant urges that the SVP's are not electron tubes [8] within the common meaning of that term since the imports do not control the flow of electrons and they do not perform the varied functions of amplification, conversion, rectification, etc. In essence, defendant maintains that the scope of item 687.60 is restricted to those devices which perform the functions and have the physical configuration stated in the definitions submitted.

Plaintiff, in support of its contention that the SVP's fall within the common meaning of "electron tube", has cited definitions of that term set forth in several technical lexicographic authorities, which defini-

[8] As correctly pointed out by plaintiff, the terms "electronic tubes", as set forth in item 687.60, TSUS, and "electron tubes" are interchangeable. See Markus, Electronics Dictionary (4th ed. 1978), p. 218-219.

tions are broader in application than the restrictive definitions proffered by defendant. The field of electronics is, or course, a technical one, and therefore the common meaning of the tariff term "electronic tube" should be determined in that context. A long line of authorities teaches that in instances where the common meaning of a technical term is in issue, as here, reliance should not be confined to general lexicons, but technical dictionaries should be consulted. *Brown Boveri Corp. et al.* v. *United States*, 53 CCPA 19, C.A.D. 870 (1966); *United States* v. *The Spiegel Bros. Corp.*, 51 CCPA 69, C.A.D. 839 (1964); *Firth Sterling, Inc.* v. *United States*, 48 CCPA 130, C.A.D. 779 (1961); *F. W. Woolworth Company* v. *United States*, 67 Cust. Ct. 9, C.D. 4245 (1971).

As noted supra, the record shows that the SVP tubes are known as cold cathode tubes, gas discharge tubes and gas spark gap tubes (R. 38, 93, 197). Technical authorities provide the following pertinent definitions:

IEEE Standard Dictionary of Electrical and Electronics Terms (2d ed. 1977):

> *Electron tube.*—An electron device in which conduction by electrons takes place through a vacuum or gaseous medium within a gas-tight envelope. * * *
>
> *Cold-cathode tube.*—An electron tube containing a cold cathode.
>
> *Gas tube.*—An electron tube in which the pressure of the contained gas or vapor is such as to affect substantially the electrical characteristics of the tube.

Modern Dictionary of Electronics (4th ed. 1972):

> *Electron tube.*—An electron device in which the electrons move through a vacuum or gaseous medium within a gas-tight envelope.
>
> *Cold-cathode tube.*—An electron tube containing a cathode which will emit electrons without being heated.
>
> *Gas tube.*—A partially evacuated electron tube containing a small amount of gas. Ionization of the gas molecules is responsible for the current flow.

Dictionary of Science and Technology (1971):

> *Electron tube or valve (electronics).*—In United States, any electron device in which the electron conduction is in a vacuum or gas-tight enclosure.

Markus, Electronics Dictionary (4th ed. 1978):

> *Electron tube.*—An electron device in which conduction of electricity is provided by electrons moving through a vacuum or gaseous medium within a gastight envelope. A tube may provide rectification, amplification, modulation, demodulation, oscillation, limiting, *and a variety of other functions.* Examples include cathode-ray tubes, gas tubes, phototubes, and vacuum tubes. Also called electronic tube, radio tube, tube, and valve (British). [Italic added.]

In addition to the foregoing definitions in technical authorities, plaintiff cites the following definition in the Random House Dictionary of the English Language (Unabridged 1966 ed.):

> *Electron tube.*—See vacuum tube.
> *Vacuum tube.*—* * * 2. A sealed glass tube containing a partial vacuum or a highly rarefied gas, in which may be observed the effects of a discharge of electricity passed through the tube between electrodes leading into it. Also called electron tubes; * * *.

The lexicographic authorities relied upon by plaintiff define "electron tube" in terms of rudimentary but essential features: an airtight enclosure, evacuated or gas-filled, providing a medium for the flow and conduction of electrons between two electrodes. Plainly, the SVP tubes satisfy these basic criteria of an electron tube (R. 38). Equally important, the record establishes that the imports are cold cathode tubes, which by definition are electron tubes.

At the trial, defendant's witness Strauss testified that there are many types of electron tubes (R. 202), and it is well settled that an eo nomine designation without limitation includes all forms of the article. *United States* v. *National Carloading Corp. et al.*, 48 CCPA 70, C.A.D. 767 (1961). Hence, the eo nomine provision for electronic tubes, in the superior heading to item 687.60, includes all forms of such tubes.

III

To recapitulate briefly, the SVP tubes are clearly described in the TSUS as both "apparatus * * * for the protection of electrical circuits" under item 685.90, and as electronic tubes under the superior heading to item 687.60. Thus, an issue of relative specificity of the two competing provisions is posed by virtue of General Interpretative Rule 10(c) which, so far as pertinent, reads:

> (c) an imported article which is described in two or more provisions of the schedules is classifiable in the provision which most specifically describes it; * * *.

In *F. L. Smidth & Company* v. *United States*, 56 CCPA 77, 85, C.A.D. 958, 409 F. 2d 1369 (1969), the Court of Customs and Patent Appeals construed the above-quoted statutory rule of relative specificity as follows:

> This (interpretative rule) appears to us to mean this: if an article is determined to be clearly described in two or more (tariff schedule) items, selection of the controlling item by relative specificity is mandatory and takes precedence over other judge-evolved methods of resolving ambiguity, including resort to extrinsic aids such as legislative history.

Under rule 10(c), the provision that more specifically describes the SVP tubes is "the item having requirements which are 'more difficult to satisfy'." *Smidth, supra*, 56 CCPA at 85; *Ozen Sound Devices, supra.* The eo nomine provision for electronic tubes is undoubtedly more restrictive and difficult to satisfy than the provision for "ap-

paratus * * * for the protection of electrical circuits". Electronic tubes, although performing a variety of functions, are essentially one kind of device. Apparatus for the protection of electrical circuits, on the other hand, are comprised of a number of highly diverse devices, such as fuses (R. 172, 179, 206), circuit breakers, lightning arresters (R. 85), insulators, transformers (R.181–182), carbon block assemblies (R. 76, 96), carbon arresters (R. 121, 168), gas tubes, neon bubbles (R. 84, 172), zener diodes, varistors, selenium rectifiers (R. 168), etc. Such heterogeneous devices perform different functions in circuit protection, and have no common physical criteria.

United States v. *Ampex Corp. et al.*, 59 CCPA 134, C.A.D. 1054, 460 F. 2d 1086 (1972) is somewhat analogous to the instant case respecting the issue of relative specificity. There, the competing provisions were item 685.20 (television apparatus) and item 688.15 (insulated electrical conductors). Addressing the issue of relative specificity, the appellate court commented (59 CCPA at 137):

> On that issue (relative specificity), we agree with dissenting Judge Newman that:
>
> Insulated electrical conductors, *although taking a variety of forms*, are essentially one kind of device. Television apparatus, on the other hand, is comprised of an *entire group of varied kinds of devices* * * *. [Italic added.]

And *cf. Stella D'Oro Biscuit Co., Inc.* v. *United States*, 79 Cust. Ct. 28, C.D. 4709 (1977), *aff'd per curiam*, 65 CCPA 52, C.A.D. 1205, 570 F. 2d 945 (1978).

IV

Finally, plaintiff contends that the SVP tubes are properly classifiable under item 687.60, TSUS, on the basis that there was an established and uniform practice by Customs of classifying the tubes under that provision, which practice was changed without the requisite notice in contravention of 19 U.S.C. 1315(d).[9] Additionally, plaintiff relies upon the doctrine of stare decisis and cites three abstract decisions of the Customs Court holding that the SVP tubes were properly dutiable under item 687.60 rather than item 685.90. Abstracts P73/89, P73/104, and P73/121 (70 Cust. Ct. 393, 396 and 399 (1973)). These three cases were submitted by the parties on an agreed statement of facts and the classification under item 687.60 was conceded by defendant without trial or briefing.

---

[9] In support of its claim under 19 U.S.C. § 1315(d), plaintiff introduced in evidence a letter from the Bureau of Customs (now Customs Service) dated July 25, 1970 ruling that the SVP tubes are classifiable as electronic tubes under item 687.60 (plaintiff's exhibit 3), and also the testimony of its witness Renken that approximately 100 shipments entered by plaintiff over a 2-year period were classified and liquidated by Customs under item 687.60 (R. 16). Plaintiff argues that the challenged assessments under item 685.90 constitute the imposition of a higher rate of duty than the Secretary of the Treasury had found applicable to the merchandise under an established and uniform practice without the notice required by the statute.

Since I agree with plaintiff's arguments that the common meaning of electronic tubes embraces the SVP's in issue and that item 687.60 is more specific than item 685.90, there is no need to address the issues raised by plaintiff concerning the Government's alleged change in administrative practice in classifying the SVP tubes under item 687.60 and stare decisis.

CONCLUSION

For the reasons stated herein, plaintiff's alternative claim under item 687.60, TSUS, is sustained, but plaintiff's primary claim under item 709.66, TSUS, is dismissed. Judgment will be entered accordingly.

Decisions of the United States Customs Court

Abstracts

Abstracted Protest Decisions

DEPARTMENT OF THE TREASURY, *May 19, 1980.*

The following abstracts of decisions of the United States Customs Court at New York are published for the information and guidance of officers of the customs and others concerned. Although the decisions are not of sufficient general interest to print in full, the summary herein given will be of assistance to customs officials in easily locating cases and tracing important facts.

ROBERT E. CHASEN,
Commissioner of Customs.

DECISION NUMBER	JUDGE & DATE OF DECISION	PLAINTIFF	COURT NO.	ASSESSED	HELD	BASIS	PORT OF ENTRY AND MERCHANDISE
				Par. or Item No. and Rate	Par. or Item No. and Rate		
P80/71	Ford, J. May 14, 1980	Benito Fernandez Pantoja, as Former Director and President de Montezuma of Florida, Inc., a Dissolved Florida Corporation	79-5-00747	Item 167.10 $1.17 per gal. and Int. Rev. taxes at $3.40 per gal. on 1100 cartons of wine	Item 167.10 $1.17 per gal. and Int. Rev. taxes at $3.40 per gal. for only 427 cartons actually received	Agreed statement of facts	Miami Shortage; sparkling wine
P80/72	Landis, J. May 14, 1980	Nadel Trading Corp.	78-10-01847	Item 737.20 17.5%	Item 688.40 5.5%	Agreed statement of facts	New York Sexy Susie Radio; electrical article

Decisions of the United States Customs Court

Abstracts

Abstracted Reappraisement Decisions

DECISION NUMBER	JUDGE & DATE OF DECISION	PLAINTIFF	COURT NO.	BASIS OF VALUATION	HELD VALUE	BASIS	PORT OF ENTRY AND MERCHANDISE
R80/157	Newman, J. May 14, 1980	Castelazo & Associates	R68/18010, etc.	United States value	Determined by adding to f.o.b. unit invoice price in Swiss francs converted to a dollar value at rate of exchange in effect at time of entry (the "claimed value"), 53% of difference between claimed value and appraised value	Agreed statement of facts	Los Angeles Machine tools and accessories and parts thereof
R80/158	Newman, J. May 14, 1980	Gehrig, Hoban & Co., Inc.	R68/14827, etc.	United States value	Determined by adding to f.o.b. unit invoice price in Swiss francs converted to a dollar value at rate of exchange in effect at time of entry (the "claimed value"), 53%	Agreed statement of facts	New York Machine tools and accessories and parts thereof

					of difference between claimed value and appraised value		
R80/159	Newman, J. May 14, 1980	Gehrig, Hoban & Co., Inc.	R68/15514, etc.	United States value	Determined by adding to f.o.b. unit invoice price in Swiss francs converted to a dollar value at rate of exchange in effect at time of entry (the "claimed value"), 53% of difference between claimed value and appraised value	Agreed statement of facts	New York Machine tools and accessories and parts thereof
R80/160	Newman, J. May 14, 1980	Gehrig, Hoban & Co., Inc.	R68/15539, etc.	United States value	Determined by adding to f.o.b. unit invoice price in Swiss francs converted to a dollar value at rate of exchange in effect at time of entry (the "claimed value"), 53% of difference between claimed value and appraised value	Agreed statement of facts	New York Machine tools and accessories and parts thereof
R80/161	Newman, J. May 14, 1980	Gehrig, Hoban & Co., Inc.	R68/16920, etc.	United States value	Determined by adding to f.o.b. unit invoice price in Swiss francs converted to a dollar value at rate of exchange in effect at time of entry (the "claimed value"), 53% of difference between claimed value and appraised value	Agreed statement of facts	New York Machine tools and accessories and parts thereof

DECISION NUMBER	JUDGE & DATE OF DECISION	PLAINTIFF	COURT NO.	BASIS OF VALUATION	HELD VALUE	BASIS	PORT OF ENTRY AND MERCHANDISE
R80/162	Newman, J. May 14, 1980	Gehrig, Hoban & Co., Inc.	R69/3014, etc.	United States value	Determined by adding to f.o.b. unit invoice price in Swiss francs converted to a dollar value at rate of exchange in effect at time of entry (the "claimed value"), 53% of difference between claimed value and appraised value	Agreed statement of facts	New York Machine tools and accessories and parts thereof

Judgment of the U.S. Customs Court in Appealed Case

MAY 12, 1980

Appeal 79-20.—ZWICKER KNITTING MILLS *v.* UNITED STATES.—ACRYLIC AND WOOL KNIT GLOVES—GLOVE SHELLS—PRECUT PALMS—AMERICAN GOODS RETURNED—STATUTORY DUTY ALLOWANCE—TSUS.—C.D. 4786 affirmed January 17, 1980 (C.A.D. 1240).

International Trade Commission Notices

Investigations by the U.S. International Trade Commission

DEPARTMENT OF THE TREASURY

The appended notices relating to investigations by the U.S. International Trade Commission are published for the information of Customs Officers and others concerned.

R. E. CHASEN,
Commissioner of Customs.

In the Matter of CERTAIN ADJUSTABLE WINDOW SHADES AND COMPONENTS THEREOF	Investigation No. 337–TA–83

Notice of Investigation

Notice is hereby given that a complaint was filed with the U.S. International Trade Commission on April 7, 1980, under section 337 of the Tariff Act of 1930 (19 U.S.C. 1337), on behalf of Newell Window Furnishings Co., 916 South Arcade Avenue, Freeport, Ill. 61032, alleging that unfair methods of competition and unfair acts exist in the importation of certain adjustable window shades into the United States, or in their sale, by reason that such adjustable window shades are allegedly covered by claims 1, 2, 7, 8, and 9 of U.S. Letters Patent No. 4,006,770. The complaint alleges that the effect or tendency of the unfair methods of competition and unfair acts is to destroy or substantially injure an industry, efficiently and economically operated, in the United States.

Complainant requests a temporary order of exclusion from entry in the United States of the imports in question. Complainant further requests that, after a full investigation has been conducted, a permanent exclusion of said imports be ordered.

Having considered the complaint, the Commission, on May 6, 1980, ORDERED THAT—

(1) Pursuant to subsection (b) of section 337 of the Tariff Act of 1930 (19 U.S.C. 1337), an investigation be instituted to determine whether there is reason to believe there is a violation and whether there is a violation of this section in the unauthorized importation of certain adjustable window shades, or components thereof, into the United States, or in their sale, by reason that such adjustable window shades are allegedy covered by claims 1, 2, 7, 8, and 9 of U.S. Letters Patent 4,006,770, the effect or tendency of which is to destroy or substantially injure an industry, efficiently and economically operated, in the United States;

(2) For the purpose of the investigation so instituted, the following are hereby named as parties upon which this notice of investigation shall be served:

(a) The complainant is—

Newell Window Furnishings Co.
916 South Arcade Avenue
Freeport, Ill. 61032

(b) The respondents are the following companies alleged to be engaged in the unauthorized importation of certain adjustable window shades into the United States, or their sale and are the parties upon which the complaint is to be served:

Tony Plastic Co.
Room 8, 7th Floor
489 Chung-San Second Road
Kaohsiung, Taiwan
Republic of China

Breneman, Inc.
1133 Sycamore Street
Cincinnati, Ohio 45210

Stanley Drapery Hardware
135 Cherry Street
Wallingford, Conn. 06492

Dirkson, Inc.
No. 1–98 Hsin Yi Road
Section 4
Taipei, Taiwan
Republic of China

Joanna Western Mills Co.
2141 S. Jefferson Street
Chicago, Ill. 60616

(c) Donald R. Dinan, U.S. International Trade Commission, 701 E Street NW., Washington, D.C. 20436, is hereby named Commission investigative attorney, a party to this investigation; and

(3) For the investigation so instituted, Chief Administrative Law Judge, Donald K. Duvall, U.S. International Trade Commission, 701 E Street NW., Washington, D.C. 20436, shall designate the presiding officer.

Responses must be submitted by the named respondents in accord-

ance with section 210.21 of the Commission's Rules of Practice and Procedure (19 CFR 210.21). Pursuant to sections 201.16(d) and 210.21 (a) of the rules, such responses will be considered by the Commission if received not later than 20 days after the date of service of the complaint. Extensions of time for submitting a response will not be granted unless good and sufficient cause therefor is shown.

Failure of a respondent to file a timely response to each allegation in the complaint and in this notice may be deemed to constitute a waiver of the right to appear and contest the allegations of the complaint and this notice, and to authorize the presiding officer and the Commission, without further notice to the respondent, to find the facts to be as alleged in the complaint and this notice and to enter both a recommended determination and a final determination containing such findings.

The complaint, except for the confidential information contained therein, is available for inspection by interested persons at the Office of the Secretary, U.S. International Trade Commission, 701 E Street NW., Washington, D.C. 20436, and in the Commission's New York City Office, 6 World Trade Center, New York, N.Y. 10048.

By order of the Commission.

Issued: May 19, 1980.

KENNETH R. MASON,
Secretary.

In the Matter of CERTAIN COAT HANGER RINGS	Investigation No. 337–TA–70

Notice of Termination

Upon consideration of the presiding officer's recommendation and the record in this proceeding, the Commission is ordering the termination of investigation No. 337–TA–70, certain coat hanger rings.

The order is effective as of May 14, 1980.

Any party wishing to petition for reconsideration of the Commission's action must do so within 14 days of service of the Commission order. Such petitions must be in accord with Commission rule 210.56 (19 CFR 210.56).

Copies of the Commission's action and order, the Commissioners' opinion(s), and any other public documents in this investigation are available to the public during official working hours (8:45 a.m. to 5:15 p.m.) in the Office of the Secretary, U.S. International Trade Commission, 701 E Street NW., Washington, D.C. 20436, telephone 202–523–0161.

Notice of the institution of this investigation was published in the Federal Register of July 18, 1979 (44 F.R. 41971).

By order of the Commission.

Issued: May 14, 1980.

KENNETH R. MASON,
Secretary.

In the Matter of CERTAIN FOOD SLICERS AND COMPONENTS THEREOF	Investigation No. 337-TA-76

Remand of Order No. 7

On April 28, 1980, the presiding officer in the above-captioned case issued Order No. 7, certifying a motion and a consent order agreement to the Commission. The Commission is remanding that order to the presiding officer in order to obtain a recommendation regarding whether the consent order agreement should be accepted.

Proposed section 337 consent order rules provide, in proposed section 210.51(a)(2) that:

> The licensing or other agreement and any agreements supplemental thereto, and affidavit shall be certified by the presiding officer to the Commission with his recommendation.

Although the proposed consent order rules are not in effect, the Commission believes that having the benefit of a recommendation by the presiding officer is beneficial and in conformance with sound administrative practice. Although rule 210.14 of the Commission's Rules of Practice and Procedure reserves certain public interest factors to the Commission for initial consideration, these factors are not exhaustive of all public interest and equitable considerations that the Commission takes into account when deciding whether to accept an agreement. The practice of obtaining a recommendation from the presiding officer has been followed with regard to settlement agreements. See Certain Resistor Chips, investigation No. 337-TA-63/65 (recommended determination of February 22, 1980).

The Commission therefore requests that the presiding officer make recommendations regarding the consent order here in issue.

By order of the Commission.

Issued: May 15, 1980.

KENNETH R. MASON,
Secretary,

Index

U.S. Customs Service

Treasury decisions: T.D. No.

Change of practice—Watches and watch movements—insular possessions 80-146

Customshouse cartman license—revocation 80-141

Foreign currencies:

Daily certified rates; May 5-9, 1980 80-143

Variances; Rates which varied from quarterly rate; May 5-9, 1980 80-144

Imports of petroleum and petroleum products, Customs regulations amended 80-142

Instruments of international traffic 80-145

Customs Court

Apparatus based on the use of radiations from radioactive substances, C.D. 4856

Burden of proof; not specially provided for clause, C.D. 4855

Classification; multifunction articles, C.D. 4855

Common meaning:

Electronic tube, C.D. 4856

Technical terms, C.D. 4856

Construction:

Tariff Schedules of the United States:

General headnotes and rules of interpretation, rule 10(c), C.D. 4856

Item 653.39, C.D. 4855

Item 683.70, C.D. 4855

Item 683.80, C.D. 4855

Item 685.70, C.D. 4855

Item 685.90, C.D. 4856

Item 687.60, C.D. 4856

Item 688.40, C.D. 4855

Item 709.66, C.D. 4856

U.S. Code:

Title 19, sec. 1315(d), C.D. 4856

Title 28, sec. 2635(a), C.D. 4855

Definitions (*see* Words and phrases)

Electrical articles, not specially provided for; power failure lights, C.D. 4855

Electronic:

Tube; common meaning, C.D. 4856

Tubes, other; surge voltage protectors, C.D. 4856

Eo nomine:

Designation, scope of, C.D. 4856

V. "More than" doctrine; flashlights, C.D. 4855

Flashlight, judicially determined meaning of, C.D. 4855
Flashlights:
Eo nomine v. "more than" doctrine, C.D. 4855
"More than" v. eo nomine doctrine, C.D. 4855
Gas tube surge voltage protectors, C.D. 4856
General Interpretative Rule 10(c); relative specificity rule, C.D. 4856
Illuminating articles of base metal, other, C.D. 4855
Judgment in appealed case (p. —):
Appeal 79-20—Acrylic and wool knit gloves; glove shells; precut palms; American goods returned; statutory duty allowance; TSUS
Legislative history
Summaries of Trade and Tariff Information (1970), schedule 7, vol. 2, p. 95, C.D. 4856
Lexicographic sources:
Brittania World Language Dictionary, vol. 51, p. 407, C.D. 4856
Dictionary of Science and Technology (1971), C.D. 4856
IEEE Standard Dictionary of Electrical and Electronic Terms (2d ed. 1977), C.D. 4856
Markus, Electronics Dictionary (4th ed. 1978), pp. 218-219, C.D. 4856
Modern Dictionary of Electronics (4th ed. 1972), C.D. 4856
The Random House Dictionary of the English Language (Unabridged 1966 ed.), C.D. 4856
Webster's New International Dictionary (2d ed. 1957), C.D. 4856
Webster's Third New International Dictionary, Unabridged (1963), C.D. 4856
"More than" v. eo nomine doctrine; flashlights, C.D. 4855
Multifunction articles; classification, C.D. 4855
Not specially provided for clause; burden of proof, C.D. 4855
Other:
Electrical apparatus * * * for the protection of electrical circuits, C.D. 4856
Electronic tubes, C.D. 4856
Portable electric lamps with self-contained electrical source, other, C.D. 4855
Power failure lights; electrical articles, not specially provided for, C.D. 4855
Relative specificity rule; General interpretative rule 10(c), C.D. 4856
Surge voltage protectors; electronic tubes, other, C.D. 4856
SVP tubes, C.D. 4856
Technical terms: common meaning, C.D. 4856
Treatises and related publications; IEEE Standard Test Specifications for Gas Tube Surge-Protective Devices (1977), p. 7, C.D. 4856
Uniform practice of classification, change in, C.D. 4856
Visual signaling apparatus, electrical, C.D. 4855
Words and phrases:
Base, C.D. 4856
Based on, C.D. 4856
Cold-cathode tube, C.D. 4856
Electron tubes, C.D. 4856
Electronic tube, C.D. 4856
Flashlight, C.D. 4855
Gas tube, C.D. 4856
Vacuum tube, C.D. 4856

JUN 18 1980 Item 950-D T 1.11/3:14/25
contin

Customs Bulletin

Regulations, Rulings, Decisions, and Notices concerning Customs and related matters

and Decisions

of the United States Court of Customs and Patent Appeals and the United States Customs Court

320-980
377
9247

Vol. 14 JUNE 17, 1980 No. 25

This issue contains

T.D. 80–147 through 80–156
General Notice
C.A.D. 1247
C.D. 4857
C.R.D. 80–5 and 80–6
International Trade Commission Notices

THE DEPARTMENT OF THE TREASURY
U.S. Customs Service

H.J.

NOTICE

The abstracts, rulings, and notices which are issued weekly by the U.S. Customs Service are subject to correction for typographical or other printing errors. Users may notify the U.S. Customs Service, Logistics Management Division, Washington, D.C. 20229, of any such errors in order that corrections may be made before the bound volumes are published.

For sale by the Superintendent of Documents, U.S. Government Printing Office, Washington, D.C. 20402. Price: $2.25 (single copy domestic); $2.85 (single copy foreign). Subscription price: $85.00 a year domestic; $106.25 a year foreign.

U.S. Customs Service

Treasury Decisions

(T.D. 80-147)

Bonds

Approval and discontinuance of carriers bonds, Customs form 3587

Bonds of carriers for the transportation of bonded merchandise have been approved or discontinued as shown below. The symbol "D" indicates that the bond previously outstanding has been discontinued on the month, day, and year represented by the figures which follow. "PB" refers to a previous bond, dated as represented by figures in parentheses immediately following, which has been discontinued. If the previous bond was in the name of a different company or if the surety was different, the information is shown in a footnote at the end of the list.

Dated: May 28, 1980.

Name of principal and surety	Date of bond	Date of approval	Filed with district director/area director/amount
Air Express International Corp. (An Il Corp.), and its subsidiary Air Express International Airlines Inc., (A De Corp.), Cargo Bldg., 89, JFK Int'l Airport, Jamaica, NY; air freight forwarder; American Motorists Insurance Co. (PB 11/22/77) D 3/21/80 [1]	Mar. 21, 1980	Mar. 21, 1980	New York Seaport; $50,000
John L. Alvarez d/b/a Alvarez Truck Brokers, P.O. Box 747, Pharr, TX; motor carrier; Lawyers Surety Corp.	Mar. 26, 1980	Apr. 22, 1980	Laredo, TX; $25,000
Automobile Transport, Inc., 36555 Michigan Ave., Wayne, MI; motor carrier; Insurance Co. of North America. D 5/14/80	Sept. 3, 1977	Sept. 7, 1977	Detroit, MI; $50,000
Charlton Bros. Transportation Co., Inc., 552 Jefferson St., Hagerstown, MD; motor carrier; The American Ins. Co.	Apr. 7, 1980	Apr. 28, 1980	Baltimore, MD; $25,000
Con-Ov-Air Air Freight Service, Inc., 55 Edgeboro Road, East Brunswick, NJ; motor carrier; Fidelity & Deposit Co. of Maryland	Apr. 10, 1980	Apr. 18, 1980	Newark, NJ; $50,000

Footnotes at end of table.

Name of principal and surety	Date of bond	Date of approval	Filed with district director/area director/amount
Consolidated Freightways Corporation of Delaware and C.F. Air Freight, Inc., 175 Linfield Dr., Menlo Park, CA; motor carrier; Safeco Ins. Co. of America (PB 4/28/77) D 5/18/80 [3]	Apr. 14, 1980	May 18, 1980	Portland, OR; $50,000
Denver-Midwest Motor Freight, Inc. (A Co. Corp.), P. O. Box 996, Denver, CO; motor carrier; St. Paul Fire & Marine Ins. Co.	Jan. 3, 1980	Mar. 3, 1980	El Paso, TX; $25,000
Eagle Air Freight, 15911 Morales, Houston, TX; motor carrier; St. Paul Fire & Marine Ins. Co.	Apr. 1, 1980	Apr. 21, 1980	Houston, TX; $25,000
Ericon International Corp., 5663 Swanville Rd., Erie, PA; contract carrier; St. Paul Fire and Marine Ins. Co.	Apr. 25, 1980	Apr. 30, 1980	Cleveland, OH; $50,000
Flight Express Cargo, Inc., P. O. Box 67, Essington, PA; motor carrier; Aetna Casualty & Surety Co. D 4/7/80	Mar. 23, 1977	Aug. 19, 1977	Philadelphia, PA; $25,000
Franks & Son, Inc., Route 1, Box 108A, Big Cabin, OK; motor carrier; Kansas City Fire & Marine Ins. (PB 2/23/77) D 2/23/80 [3]	Feb. 23, 1980	Apr. 14, 1980	Nogales, AZ; $25,000
Fredrick Transport, Ltd., RR No. 6, Chatham, Ontario, Canada; motor carrier; Lawyers Surety Corp.	Mar. 21, 1980	May 8, 1980	Detroit, MI; $50,000
Donald A. Hosford, d/b/a The Herbert C. Hosford Co., 1222 Linden Ave., Erie, PA; freight forwarder; St. Paul Fire & Marine Ins. Co. D 4/30/80	May 11, 1978	May 31, 1978	Cleveland, OH; $50,000
Indiana Transit Service, Inc., 4300 W. Morris St., Indianapolis, IN; motor carrier; Fidelity and Deposit Co. of MD D 4/8/80	Mar. 27, 1979	Apr. 4, 1979	Chicago, IL; $25,000
Inland State Air Enterprises, Inc., P.O. Box 4580, Station D, Hamilton, Ontario, Canada; motor carrier; Commercial Union Ins. Co.	Apr. 17, 1980	May 12, 1980	Detroit, MI; $50,000
Inter-City Truck Lines (Canada) Inc., P.O. Box 900 Station "U", Toronto, Ontario, Canada; motor carrier; United States Fidelity & Guaranty Co., (PB 8/2/72) D 4/17/80 [4]	Aug. 2, 1979	Apr. 17, 1980	Detroit, MI; $50,000
Intercontinental Forwarders, Inc., 9 Dearborn Rd., Peabody, MA; motor carrier; Investors Insurance Company of America (PB 11/25/75) D 5/20/80 [4]	May 2, 1980	May 20, 1980	Boston, MA; $50,000
Johnson Motor Lines, Inc., 2426 N. Graham St., Charlotte, NC; P. O. Box 31577; motor carrier; Insurance Company of North America (PB3/4/57) D 5/14/80 [4]	Apr. 29, 1980	May 14, 1980	New York Seaport; $25,000
Laurel Hill Trucking Co., 614 New County Rd., Secaucus, NJ; motor carrier; Federal Insurance Co.	Oct. 16, 1979	May 7, 1980	Newark, NJ; $50,000

Footnotes at end of table.

Name of principal and surety	Date of bond	Date of approval	Filed with district director/area director/amount
Miller Livestock Truck Co., Inc., Route 8, Box 224, Bakersfield, CA; motor carrier; Peerless Ins. Co. (PB 10/20/78) D 5/2/80[7]	Apr. 24, 1980	May 2, 1980	Laredo, TX; $25,000
Norfolk Shipbuilding & Drydock Corp., Foot of Liberty Street, Norfolk, VA; motor carrier; Fidelity and Deposit Co. D 4/17/80	Dec. 3, 1979	Dec. 18, 1979	Norfolk, VA; $25,000
Francisco Vega Otero, Inc., P. O. Box 175, Caguas, PR; motor carrier; Peerless Ins. Co. (PB 10/26/76) D 2/25/80	Aug. 28, 1979	Feb. 25, 1980	San Juan, PR; $25,000
Theadore J. Suleski, T/A Pacific East Air Freight Transfer, Inc., 34 Lakeview Dr., Cherry Hill, NJ; motor carrier; Fidelity & Deposit Co. D 5/15/80	Feb. 21, 1979	Mar. 30, 1979	Philadelphia, PA; $25,000
Serv-U, Inc., P.O. Box 18451, Baltimore, Md; motor carrier; Fidelity and Deposit Co. of Maryland	May 19, 1980	May 20, 1980	Baltimore, MD; $25,000
Southwest Equipment Rental, Inc., d/b/a Southwest Motor Freight, P.O. Box 9596, Chattanooga, TN; motor carrier; The Glen Falls Ins. Co.	Mar. 20, 1980	Apr. 30, 1980	New Orleans, LA; $50,000
Joe H. Tidwell, P.O. Box 826, Pharr, TX; motor carrier; Fidelity and Deposit Co. (PB 5/1/79) D 5/5/80[8]	May 1, 1980	May 5, 1980	Laredo, TX; $25,000
Travis Transportation, Inc., 6013 Rittiman Plaza, San Antonio, TX; motor carrier; United States Fidelity and Guaranty Co.	May 8, 1980	May 16, 1980	Laredo, TX; $25,000
Valley Distributing & Storage Co., Inc., 1 Passan Drive, RD #2, Laflin, PA; motor carrier; U.S. Fidelity and Guaranty Co. (PB 8/9/77) D 3/31/80[9]	Feb. 26, 1980	Mar. 31, 1980	Philadelphia, PA; $25,000
Walt Wilson Trucking, Inc., P.O. Box 2008, Petaluma, CA; motor carrier; The Continental Insurance Co.	Apr. 10, 1980	May 13, 1980	San Francisco, CA; $30,000
Younger Transportation, Inc., P.O. Box 14066, Houston, TX; motor carrier; Lawyers Surety Corp.	Mar. 4, 1980	Apr. 18, 1980	New Orleans, LA; $25,000

[1] Principal is Air Express International Corp.

[2] Principal is Consolidated Freightways Corp. of Delaware; C. F. Tank Lines, Inc., and C. F. Air Freight, Inc. Surety is Seaboard Surety Co.

[3] Surety is Continental Casualty Co.

[4] Principal is Inter-City Truck Lines Ltd.

[5] Surety is The Aetna Casualty & Surety Co.

[6] Surety is Seaboard Surety Co.

[7] Surety is Aetna Insurance Co.

[8] Principal is Joe H. Tidwell d/b/a Northeast Truck Brokers. Surety is United States Fire Insurance Co.

[9] Surety is The Aetna Casualty & Surety Co.

BON-3-03

GEORGE C. STEUART
(For Alfred G. Scholle, Director,
Carriers, Drawback and Bonds Division).

(T.D. 80-148)

Foreign Currencies—Daily Rates for Countries Not on Quarterly Lists

Rates of exchange based on rates certified to the Secretary of the Treasury by the Federal Reserve Bank of New York for the Brazil cruzeiro, People's Republic of China yuan, Hong Kong dollar, Iran rial, Philippines peso, Singapore dollar, Thailand baht (tical), and Venezuela bolivar

The Federal Reserve Bank of New York, pursuant to section 522(c), Tariff Act of 1930, as amended (31 U.S.C. 372(c)), has certified buying rates for the dates and foreign currencies shown below. The rates of exchange, based on these buying rates, are published for the information and use of Customs officers and others concerned pursuant to part 159, subpart C, Customs Regulations (19 CFR 159, subpart C).

Brazil cruzeiro:	
May 12–13, 1980	$0.0204
May 14–16, 1980	.0199
People's Republic of China yuan:	
May 12, 1980	$0.665823
May 13, 1980	.669165
May 14, 1980	.668896
May 15–16, 1980	.669165
Hong Kong dollar:	
May 12, 1980	$0.204708
May 13, 1980	.204834
May 14, 1980	.204353
May 15, 1980	.203749
May 16, 1980	.203583
Iran rial:	
May 12–16, 1980	Not available
Philippines peso:	
May 12–16, 1980	$0.1345
Singapore dollar:	
May 12–13, 1980	$0.461894
May 14, 1980	.462963
May 15, 1980	.461681
May 16, 1980	.463285
Thailand baht (tical):	
May 12–16, 1980	$0.0490

Venezuela bolivar:

May 12–16, 1980	$0.2329

(LIQ-3-TRODE)

Dated: May 28, 1980.

G. SCOTT SHREVE
(For Chester R. Krayton, Director,
Duty Assessment Division).

(T.D. 80-149)

Foreign Currencies—Variances From Quarterly Rate

Rates of exchange based upon rates certified to the Secretary of the Treasury by the Federal Reserve Bank of New York

The following rates of exchange are based upon rates certified to the Secretary of the Treasury by the Federal Reserve Bank of New York, pursuant to section 522(c), Tariff Act of 1930, as amended (31 U.S.C. 372(c)), and reflect variances of 5 per centum or more from the quarterly rate published in T.D. 80–103 for the following countries. Therefore, as to entries covering merchandise exported on the dates listed, whenever it is necessary for customs purposes to convert such currency into currency of the United States, conversion shall be at the following rates:

Austria schilling:	
May 12, 1980	$0.078003
May 13, 1980	.078493
May 14, 1980	.078247
May 15, 1980	.078125
May 16, 1980	.077942
Belgium franc:	
May 12, 1980	$0.034698
May 13, 1980	.034566
May 14, 1980	.034710
May 15, 1980	.034698
May 16, 1980	.034650
Denmark krone:	
May 12, 1980	$0.178174
May 13, 1980	.177936
May 14, 1980	.178651
May 15, 1980	.178476
May 16, 1980	.178333

Finland markka:	
May 12, 1980	$0.269505
May 13, 1980	.270599
May 14, 1980	.270234
May 15, 1980	.270453
May 16, 1980	.270270
France franc:	
May 12, 1980	$0.238521
May 13, 1980	.237812
May 14, 1980	.238692
May 15, 1980	.238949
May 16, 1980	.238379
Germany deutsche mark:	
May 12, 1980	$0.558441
May 13, 1980	.557351
May 14, 1980	.558909
May 15, 1980	.558347
May 16, 1980	.557476
India rupee:	
May 12, 1980	$0.1269
May 13–16, 1980	.1266
Ireland pound:	
May 12, 1980	$2.0720
May 13, 1980	2.0770
May 14, 1980	2.0710
May 15, 1980	2.0735
May 16, 1980	2.0715
Italy lira:	
May 12, 1980	$0.001180
May 13, 1980	.001182
May 14, 1980	.001186
May 15, 1980	.001187
May 16, 1980	.001182
Japan yen:	
May 12, 1980	$0.004409
May 13, 1980	.004391
May 14, 1980	.004401
May 15, 1980	.004390
May 16, 1980	.004355
Malaysia dollar:	
May 12, 1980	$0.455789
May 13, 1980	.457457

May 14, 1980	.459348
May 15, 1980	.459137
May 16, 1980	.459559
Netherlands guilder:	
May 12, 1980	$0.506842
May 13, 1980	.505433
May 14, 1980	.507099
May 15, 1980	.507099
May 16, 1980	.506329
Norway krone:	
May 12, 1980	$0.202840
May 13, 1980	.203293
May 14, 1980	.203770
May 15, 1980	.203770
May 16, 1980	.203087
Portugal escudo:	
May 12, 1980	$0.020284
May 13, 1980	.020305
May 14, 1980	.020408
Sweden krona:	
May 12, 1980	$0.236295
May 13, 1980	.236742
May 14, 1980	.237079
May 15, 1980	.237107
May 16, 1980	.236630
Switzerland franc:	
May 12, 1980	$0.602047
May 13, 1980	.599880
May 14, 1980	.602410
May 15, 1980	.600781
May 16, 1980	.598440
United Kingdom pound:	
May 12, 1980	$2.2810
May 13, 1980	2.2790
May 14, 1980	2.2975
May 15, 1980	2.3005
May 16, 1980	2.2840

(LIQ-3-TRODE)

Dated: May 28, 1980.

G. Scott Shreve
(For Chester R. Krayton, Director,
Duty Assessment Division).

320-980 O - 80 - 2 : QL 3

(T.D. 80–150)

Tuna Fish—Tariff-Rate Quota

The tariff-rate quota for the calendar year 1980, on tuna classifiable under item 112.30, Tariff Schedules of the United States

AGENCY: U.S. Customs Service, Department of the Treasury.

ACTION: Announcement of the quota quantity for tuna for calendar year 1980.

SUMMARY: Each year the tariff-rate quota for tuna fish described in item 112.30, Tariff Schedules of the United States (TSUS), is based on the U.S. pack of canned tuna during the preceding calendar year.

EFFECTIVE DATES: The 1980 tariff-rate quota is applicable to tuna fish entered, or withdrawn from warehouse, for consumption during the period January 1 through December 31, 1980.

FOR FURTHER INFORMATION CONTACT: Helen C. Rohrbaugh, Head, Quota Section, Duty Assessment Division, Office of Commercial Operations, U.S. Customs Service, Washington, D.C. 20229; 202–566–8592.

It has now been determined that 109,074,094 pounds of tuna may be entered for consumption or withdrawn from warehouse for consumption during the calendar year 1980 at the rate of 6 per centum ad valorem under item 112.30, TSUS. Any such tuna which is entered, or withdrawn from warehouse, for consumption during the current calendar year in excess of this quota will be dutiable at the rate of 12.5 per centum ad valorem under item 112.34 of the tariff schedules.

(QUO-2-0:D:S:Q GH)

Dated: May 30, 1980.

R. E. CHASEN,
Commissioner of Customs.

[Published in the Federal Register, June 5, 1980 (45 F.R. 37940)

(T.D. 80–151)

Importations Temporarily Free of Duty; Customs Regulations Amended

Sections 54.5 and 54.6, Customs Regulations, relating to metal articles imported to be used in remanufacture by melting, amended

TITLE 19—CUSTOMS DUTIES

CHAPTER I—U.S. CUSTOMS SERVICE

PART 54—CERTAIN IMPORTATIONS TEMPORARILY FREE OF DUTY

AGENCY: U.S. Customs Service, Department of the Treasury.

ACTION: Final rule.

SUMMARY: This document amends the Customs Regulations to conform to legislation extending until June 30, 1981, the existing suspension of Customs duty on certain metal waste and scrap and other articles of metal imported to be used in remanufacture by melting. The legislation also suspends the duty on certain articles of metal imported to be processed by shredding, shearing, compacting, or similar processing which renders them fit only for the recovery of the metal content. These changes will expedite the entry and use of these articles and, because recovery of metal from metal waste and scrap usually requires less energy than is needed to produce metals from ores, aid in energy conservation. The amendments are not considered to be significant.

EFFECTIVE DATE: Upon publication in the Federal Register.

FOR FURTHER INFORMATION CONTACT: Leonard J. Emmert, Classification and Value Division, U.S. Customs Service, 1301 Constitution Avenue NW., Washington, D.C. 20229; 202-566-8181.

SUPPLEMENTARY INFORMATION:

BACKGROUND

Public Law 95-508, approved October 24, 1978, amended items 911.11 and 911.12, Tariff Schedules of the United States (TSUS) (19 U.S.C. 1202), to suspend, until June 30, 1981, Customs duty on certain articles of metal imported to be processed by shredding, shearing, compacting, or similar processing which renders them fit only for the recovery of the metal content. The legislation also extended until June 30, 1981, the existing suspension of duty on certain metal waste and scrap and other articles of metal imported to be used in remanufacture by melting.

The temporary suspension of duty on metal waste and scrap has been in effect almost continuously since 1942. On October 1, 1950, it was extended to include articles of metal imported to be used, and actually used, in remanufacture by melting (act of March 13, 1942, 56 Stat. 171, as amended by Public Law 869, 81st Congress; see T.D. 52656, 86 Treas. Dec. 27 (1951)).

The suspension of duty on metal waste and scrap originally was instituted to assist steel producers in some sections of the United States in obtaining adequate supplies of raw materials. Duty-free importation was permitted for certain metal articles provided that the importer submitted a certificate of remelting to Customs within 3 years of importation, verifying that the articles actually were used in remanufacture by melting.

The limitation of proof of actual use to a certificate of remelting has been found to be overly restrictive and unnecessarily burdensome to U.S. mills and refiners using imported scrap metal. It is anticipated that providing importers with the alternative of furnishing proof that the articles have been processed by shredding, shearing, compacting, or similar processing which renders them fit only for the recovery of the metal content, will eliminate the difficulties encountered in furnishing proof of remanufacture by melting and the attendant delay in liquidating entries awaiting such proof. The extension also is expected to aid in energy conservation because the recovery of metal from metal waste and scrap usually requires less energy than is needed to produce metals from ores. While the duty on these articles has been suspended until June 30, 1981, because it will be necessary for Congress to consider whether to continue the suspension beyond that date, the regulations provide that the suspension is in force during the effective period of items 911.11 and 911.12, TSUS.

Articles of copper now are listed as an exception to the free entry provision in section 54.5(a), Customs Regulations. However, item 911.11, TSUS, provides for the duty-free entry of these articles if to be used in remanufacture by melting, or to be processed by shredding, shearing, compacting, or similar processing which renders them fit only for the recovery of the metal content. To correct this inconsistency, copper is deleted from the exemptions in section 54.5(a).

INAPPLICABILITY OF PUBLIC NOTICE AND DELAYED EFFECTIVE DATE PROVISIONS

Because this is a technical amendment in which the public does not have a particular interest and it merely implements a statutory requirement, notice and public procedure pursuant to 5 U.S.C. 553(b)(B) are unnecessary. In accordance with 5 U.S.C. 553(d)(1), a delayed effective date is not required because this amendment grants an exemption.

AMENDMENTS TO THE REGULATIONS

Part 54, Customs Regulations (19 CFR 54), is amended to read as follows:

PART 54—CERTAIN IMPORTATIONS TEMPORARILY FREE OF DUTY

METAL ARTICLES IMPORTED TO BE USED IN REMANUFACTURE BY MELTING, OR TO BE PROCESSED BY SHREDDING, SHEARING, COMPACTING, OR SIMILAR PROCESSING WHICH RENDERS THEM FIT ONLY FOR THE RECOVERY OF THE METAL CONTENT

54.5 Scope of exemptions; nondeposit of estimated duty.
54.6 Proof of intent; bond; proof of use; liquidation.

AUTHORITY: R.S. 251, as amended, sec. 624, 46 Stat. 759, 19 U.S.C. 66, 1624, gen. hdnte. 11, Tariff Schedules of the United States (TSUS), (sec.

101, 76 Stat. 72; item 911.10, TSUS, 92 Stat. 1774; items 911.11 and 911.12, TSUS).

SOURCE: 28 FR 14838, Dec. 31, 1963, as amended by T.D. 80- (F.R.).

54.5 Scope of exemptions; nondeposit of estimated duty.

(a) Except as otherwise provided in this section, articles in chief value of metal to be used in remanufacture by melting, or to be processed by shredding, shearing, compacting, or similar processing which renders them fit only for the recovery of the metal content, and actually so used, shall be entitled to free entry upon compliance with section 54.6, if entered, or withdrawn from warehouse for consumption, during the effective period of items 911.11 and 911.12, Tariff Schedules of the United States (TSUS) (19 U.S.C. 1202). This provision does not apply to

(i) articles in chief value of lead, zinc, or tungsten;

(ii) metal-bearing materials provided for in schedule 4, TSUS, or part 1, schedule 6, TSUS: or

(iii) unwrought metal provided for in part 2, schedule 6, TSUS.

(b) No deposit of estimated duty shall be required upon the entry, or withdrawal from warehouse for consumption, of the articles described in paragraph (a) of this section if the district director is satisfied at the time of entry, or withdrawal, by written declaration of the importer that the merchandise is being imported to be used in remanufacture by melting, or to be processed by shredding, shearing, compacting, or similar processing which renders it fit only for the recovery of the metal content.

54.6 Proof of intent; bond; proof of use; liquidation.

Articles in chief value of metal, described in section 54.5(a), shall be admitted free of duty upon compliance with the following conditions:

(a) There shall be filed in connection with the entry [1] a statement of the importer that the articles are to be used in remanufacture by melting, or to be processed by shredding, shearing, compacting, or similar processing which renders them fit only for the recovery of the metal content.

(b) If the articles are entered for consumption, there also shall be filed in connection with the entry a bond on Customs form 7551 or 7553. If the articles are entered for warehouse, the regular warehouse bond, Customs form 7555, shall be given, and withdrawals shall be made on Customs form 7506. The liquidation of the consumption or warehouse entry shall be suspended pending proof of use or other disposition of the articles within the time prescribed in paragraph (c) of this section.

(c) Within 3 years from the date of entry, or withdrawal from warehouse for consumption, the importer shall submit to the district director at the port of entry, a statement from the

[1] "In connection with the entry" means any time before liquidation of the entry or within the period during which a valid reliquidation may be completed (sec. 113.43(c)). Therefore, a claim for free entry under item 911.11 or 911.12, Tariff Schedules of the United States, supported by a statement of intent may be filed at any time before liquidation of the entry or within the period during which a valid reliquidation may be completed.

superintendent or manager of the plant at which the articles were used in remanufacture by melting, or were processed by shredding, shearing, compacting, or similar processing which rendered fit only for the recovery of the metal content, showing:

(1) The name and location of the plant;

(2) The entry number, date, and port of entry (if the person making the statement is not in possession of this information, a reference to invoices, purchase orders, or other documents which will identify the shipment with the entry may be substituted);

(3) The date or inclusive dates of the remanufacture or processing of the articles; and

(4) A description of the remanufacture or processing in sufficient detail to enable the district director to determine whether it constituted a use in remanufacture by melting, or processing by shredding, shearing, compacting, or similar processing which rendered the articles fit only for the recovery of the metal content. In appropriate cases, the remanufacture or processing of the articles covered by more than one entry may be included in one statement. The statement shall be based on adequate and carefully kept plant and import records which shall be available during normal business hours to any Customs officer. The importer and plant manager shall maintain the import and plant records for 5 years from the date of the related entry of the merchandise. The burden shall be on the importer or plant manager to keep these records so that the claim of actual use can be established readily.

(d) If satisfactory proof of use of the articles in remanufacture by melting, or in processing by shredding, shearing, compacting, or similar processing which rendered them fit only for the recovery of the metal content, is furnished within the prescribed time, the entry shall be liquidated without the assessment of duty on the covered articles. If proof is not filed within 3 years from the date of entry, or withdrawal from warehouse for consumption, or the use does not warrant the classification claimed, the entry shall be liquidated without any exemption from duty under item 911.11, or 911.12, Tariff Schedules of the United States.

(R.S. 251, as amended, sec. 624, 46 Stat. 759 (19 U.S.C. 66, 1624) sec. 101, 76 Stat. 72; item 911.10, Tariff Schedules of the United States (TSUS), 92 Stat. 1774; items 911.11 and 911.12, TSUS).

REGULATIONS DETERMINED TO BE NONSIGNIFICANT

In a directive published in the Federal Register on November 8, 1978 (43 F.R. 52120), implementing Executive Order 12044, Improving Government Regulations, the Treasury Department stated that it considers each regulation or amendment to an existing regulation published in the Federal Register and codified in the Code of Federal Regulations to be significant. However, it has been deter-

mined that this amendment does not meet the Treasury Department criteria in the directive for a significant regulation because it is nonsubstantive, essentially procedural, does not materially change existing or establish new policy, and does not impose substantial additional requirements or costs on, or substantially alter the legal rights or obligations of, those affected.

DRAFTING INFORMATION

The principal author of this document was Lawrence P. Dunham, Regulations and Research Division, Office of Regulations and Rulings, U.S. Customs Service. However, personnel from other Customs offices participated in its development.

WILLIAM T. ARCHEY,
Acting Commissioner of Customs.

Approved: May 9, 1980.
RICHARD J. DAVIS,
Assistant Secretary of the Treasury.

[Published in the Federal Register, June 6, 1980 (45 F.R. 38040)]

(T.D. 80-152)

Coastwise Transportation—Customs Regulations Amended

Sections 4.93(b)(1) and 4.93(b)(2), Customs Regulations, amended to add Bermuda to the lists of nations whose registered vessels are permitted to transport certain articles coastwise.

TITLE 19—CUSTOMS DUTIES

CHAPTER I—U.S. CUSTOMS SERVICE

PART 4—VESSELS IN FOREIGN AND DOMESTIC TRADES

AGENCY: U.S. Customs Service, Department of the Treasury.

ACTION: Final rule.

SUMMARY: This document amends the Customs Regulations to add Bermuda to the lists of nations which permit vessels of the United States to transport certain articles specified in section 27, Merchant Marine Act of 1920, as amended, between their ports. Satisfactory evidence has been obtained by the Department of State that Bermuda places no restriction on the transportation of the specified articles by vessels of the United States between ports in Bermuda. This amendment provides reciprocal privileges for vessels of Bermudian registry.

EFFECTIVE DATE: September 14, 1979.

FOR FURTHER INFORMATION CONTACT: John A. Mathis, Carriers, Drawback, and Bonds Division, U.S. Customs Service, 1301 Constitution Avenue NW., Washington, D.C. 20229; 202-566-5706.

SUPPLEMENTARY INFORMATION:

BACKGROUND

Section 27, Merchant Marine Act of 1920, as amended (46 U.S.C. 883) (the act), provides generally that no merchandise shall be transported by water, or by land and water, between points in the United States except in vessels built in and documented under the laws of the United States and owned by U.S. citizens. However, the act, as amended by Public Law 90-474 (82 Stat. 700; T.D. 68-227), provides that if the Secretary of State advises the Secretary of the Treasury that a foreign nation does not restrict the transportation of certain articles between its ports by vessels of the United States, reciprocal privileges will be accorded to vessels of that nation, and the prohibition against the transportation of those articles between points in the United States will not apply to its vessels.

Section 4.93(b)(1), Customs Regulations (19 CFR 4.93(b)(1)), lists those nations found to extend reciprocal privileges to vessels of the United States for the transportation of empty cargo vans, empty lift vans, and empty shipping tanks. Those nations found to grant reciprocal privileges to vessels of the United States for the transportation of equipment for use with cargo vans, lift vans, or shipping tanks; empty barges specifically designed for carriage aboard a vessel and certain equipment for use with such barges; certain empty instruments of international traffic; and certain stevedoring equipment and material are listed in section 4.93(b)(2), Customs Regulations (19 CFR 4.93 (b)(2)).

On September 14, 1979, the Department of State advised the Secretary of the Treasury that Bermuda places no restriction on the transportation of the articles listed in the act by vessels of the United States between ports in Bermuda. Therefore, reciprocal privileges are accorded to vessels of Bermudian registry as of that date.

FINDING

On the basis of the information received from the Secretary of State, as described above, I find that the Government of Bermuda places no restriction on the transportation of the articles specified in section 27 of the Merchant Marine Act of 1920, as amended, by vessels of the United States between points in Bermuda. Therefore, reciprocal

privileges are accorded to vessels of Bermudian registry as of September 14, 1979.

AMENDMENT TO THE REGULATIONS

To reflect the reciprocal privileges granted to Bermuda, sections 4.93 (b)(1) and (b)(2), Customs Regulations (19 CFR 4.93 (b)(1), (b)(2)), are amended by inserting "Bermuda" in appropriate alphabetical order in the lists of nations under those sections.

(Sec. 27, 41 Stat. 999, as amended, sec. 14, 67 Stat. 516, Public Law 90–474, 82 Stat. 700 (5 U.S.C. 301, 19 U.S.C. 1322(a), 46 U.S.C. 883))

INAPPLICABILITY OF PUBLIC NOTICE AND DELAYED EFFECTIVE DATE REQUIREMENTS

Because these are minor amendments in which the public is not particularly interested and there is a statutory basis for the described extension of reciprocal privileges, notice and public procedure pursuant to 5 U.S.C. 553(b)(B) are unnecessary. In accordance with 5 U.S.C. 553(d)(1), a delayed effective date is not required because these amendments grant an exemption.

REGULATION DETERMINED TO BE NONSIGNIFICANT

In a directive published in the Federal Register on November 8, 1978 (43 F.R. 52120), implementing Executive Order 12044, Improving Government Regulations, the Treasury Department stated that it considers each regulation or amendment to an existing regulation published in the Federal Register and codified in the Code of Federal Regulations to be significant. However, regulations which are nonsubstantive, are essentially procedural, do not materially change existing or establish new policy, and do not impose substantial additional requirements or costs on, or substantially alter the legal rights or obligations of, those affected, with Secretarial approval may be determined not to be significant. Accordingly, it has been determined that this document does not meet the Treasury Department criteria in the directive for significant regulations.

DRAFTING INFORMATION

The principal author of this document was Janet L. Johnson, Regulations and Research Division, Office of Regulations and Rulings, U.S. Customs Service. However, personnel from other offices of the Customs Service and the Departments of State and the Treasury participated in its development.

Dated May 16, 1980.

JOHN P. SIMPSON
(For Assistant Secretary of the Treasury).

[Published in the Federal Register, June 9, 1980 (45 F.R. 38355)]

320-980 O - 80 - 3 : QL 3

(T.D. 80-153)

Notice That the Customs Service Is Affirming the Standards It Uses for Orange Juice Products in Determining Same kind and Quality Questions Under the Drawback Law

AGENCY: U.S. Customs Service, Department of the Treasury.

ACTION: Final determination.

SUMMARY: In a notice published September 27, 1979 (44 F.R. 55690), the Customs Service invited comments on its use of the standards of identities of the Food and Drug Administration (FDA) and the standards of grades of the U.S. Department of Agriculture (USDA) for orange juice products as guidelines in determining same kind and quality questions for purposes of substitution under the drawback law. This notice informs the public and, in particular, the citrus industry, that after a review of the comments received in response to the September 27, 1979, notice, Customs has affirmed its use of FDA standards of identities and USDA standards of grades for orange juice products as guidelines in determining these questions.

FOR FURTHER INFORMATION CONTACT: Norman W. King, Carriers, Drawback, and Bonds Division, U.S. Customs Service, 1301 Constitution Avenue NW., Washington, D.C. 20229; 202-566-5856.

SUPPLEMENTARY INFORMATION:

BACKGROUND

"Drawback" denotes a situation in which a duty or tax, lawfully collected, is refunded or remitted, wholly or partially, because of a particular use made of the merchandise on which the duty or tax was collected. One of the more common types of drawback is that allowed, under section 313(a), Tariff Act of 1930 (19 U.S.C. 1313(a)), upon the exportation of articles manufactured or produced in the United States with the use of imported merchandise. Under section 313(b), Tariff Act of 1930, as amended (19 U.S.C. 1313(b)), if domestic merchandise of the same kind and quality as imported merchandise is used in the manufacture of new and different articles, drawback may be allowed on the imported merchandise upon the exportation of the articles, notwithstanding the fact that none of the imported merchandise was actually used in the manufacture or production of the exported articles. Section 313(b) is often called the "substitution drawback law." The Customs Service has the responsibility to determine the same kind and quality questions under the substitution drawback law.

Customs has applied consistently the standards of identities of the Food and Drug Administration (FDA) for orange juice products (21 CFR, part 146) as guidelines in determining whether one orange juice product is of the same kind as another. For example, 21 CFR 146.153 defines the standard of identity for "concentrated orange juice for manufacturing," and 21 CFR 146.145 defines the standard of identity for "orange juice from concentrate." Thus, two different orange juice products are defined by these standards.

Customs also has applied consistently the standards of grades of the Department of Agriculture (USDA) for orange juice products (7 CFR, part 2852) as guidelines in determining whether products of the same kind are of the same quality. For example, two batches of orange juice from concentrate that meet the grade A standard under 7 CFR 2852.5681–5691 would be considered to be of the same quality.

An orange juice processor requested Customs to reconsider its ruling that fresh orange juice is not of the same kind and quality as orange juice from concentrate for substitution drawback purposes. The processor proposed to substitute fresh orange juice (identified under 21 CFR 146.135) for orange juice from concentrate (identified under 21 CFR 146.145) for use in the manufacture of pasteurized orange juice (identified under 21 CFR 146.140).

In order that the matter might receive full and fair consideration, Customs published a notice in the Federal Register on September 27, 1979 (44 F.R. 55690), inviting public comments on its use of FDA standards of identities and USDA standards of grades in determining same kind and quality questions for orange juice products under the substitution drawback law. Brief descriptions of the FDA standards of identities and USDA standards of grades, Customs reasons for using those standards, and Customs views as to the possible effects of not using those standards in determining same kind and quality questions, were included in the notice.

PRESENT PROCEDURES COMPARED WITH PROCESSOR'S PROPOSAL

An example of a situation in which a citrus processor may obtain drawback under the substitution drawback law when the FDA and USDA standards are applied under present procedures follows:

1. The processor obtains a batch of imported duty-paid concentrated orange juice for manufacturing, as defined in the FDA standard of identity (21 CFR 146.153), which meets the grade A quality standard of the USDA (7 CFR 2852.2221–2852.2231).

2. The processor substitutes a domestic batch of concentrated orange juice for manufacturing, as defined in 21 CFR 146.153 that meets the same grade A quality standard as the imported batch.

3. With the use of the imported and substituted domestic batches of concentrates, the processor manufactures a new product, such as orange juice from concentrate, as defined in the FDA standard of identity (21 CFR 146.145), or frozen concentrated orange juice, as defined in the FDA standard of identity (21 CFR 146.146).

4. Upon exportation of the new product, orange juice from concentrate, or frozen concentrated orange juice, manufactured with the use of the imported and/or substituted domestic concentrated orange juice for manufacturing, of the same kind and quality, drawback is allowed in the amount of 99 percent of the duty paid on the imported orange juice.

The orange juice processor, later joined by other processors, asked that Customs reconsider its present procedures and that drawback be allowed on the basis of duty paid on imported concentrated orange juice for manufacturing upon the exportation of pasteurized orange juice produced with the use of fresh orange juice extracted from domestic oranges. The proposal is as follows:

1. A processor would obtain imported duty-paid 65° Brix concentrated orange juice for manufacturing which meets the USDA grade A quality standard.

2. With the use of the imported concentrate, the processor would manufacture a single strength orange juice from concentrate of not less than 11.8° Brix.

3. The processor would substitute fresh orange juice extracted from domestic oranges for the orange juice from concentrate manufactured with the use of the imported concentrate.

4. The processor would export pasteurized orange juice produced with the use of fresh orange juice extracted from domestic oranges.

5. The processor would further process the orange juice from concentrate for domestic consumption, using a heat-treating or pasteurization process.

6. The processor would claim drawback for the duty paid on the imported concentrated orange juice for manufacturing.

In the ruling which Customs is asked to reconsider, Customs applied the FDA standards of identities and the USDA standards of quality grades in deciding that orange juice from concentrate and fresh orange juice extracted from domestic oranges are not of the same kind and quality for drawback substitution purposes. The ruling noted that "orange juice from fresh oranges may differ in degree Brix, color, and taste depending upon the type of orange, its maturity and the season" and is "primarily used to manufacture citrus products and used as 'cutback' in the manufacture of frozen concentrated orange juice." There are no USDA grades of quality standards for fresh orange juice.

On the other hand, orange juice from concentrate is a finished blended product that may be treated by heat, with a minimum degree Brix of 11.8°, ready for consumption and required by the FDA standards of identities to be labeled as "orange juice from concentrate" for the benefit of the consumer. Furthermore, USDA regulations establish standards of quality grades (A, B, and substandard) for orange juice from concentrate based on a scoring system for color, defects, and flavor.

DISCUSSION OF COMMENTS

Comments were received from the Florida Citrus Processors Association, six Florida citrus processors, drawback consultants, Government agencies, and a Texas orange grower.

I. No commenter objected to the use of the USDA standards of grades for orange juice products. Several processors indicated that they did not want to lower the existing quality standards or to change or to lower the rate of duty on imported orange juice. However, most processors objected to Customs use of FDA standards of identities for orange juice products as guidelines in determining whether one orange juice product is of the same kind and quality as another for purposes of the substitution drawback law. They contended that the standards of identities are merely labeling requirements concerning the form of the juice and proposed that Customs use "pounds solids" in combination with the USDA standards of grades to determine same kind and quality questions relating to orange juice products.

"Pounds solids" is a form of measurement, used by both the citrus industry and Customs, to determine the amount of soluble solids, primarily sugars, in orange fruit. "Brix" is a scale for measuring the concentration of the solids in an orange juice product. The "degree Brix" of concentrated orange juice is converted into pounds solids to determine its value. Pounds solids may be converted into gallons to determine the duty on imported concentrated orange juice and the drawback allowed on exportation of orange juice products made with the use of concentrated orange juice.

All orange juice products contain pounds solids. Therefore, under the proposal advanced by the processors (the "pounds solids proposal"), any two orange juice products would be of the same kind for purposes of the substitution drawback law, and if the products were of the same quality, as determined under the USDA standards of grades, the same kind and quality requirements of the substitution drawback law would be satisfied. For example, under the pounds solids proposal, orange juice from concentrate and concentrated orange juice for manufacturing would be the same kind of products because they both contain pounds solids and are used interchangeably by the industry.

Thus, if both products also would meet the USDA grade A quality standards, the same kind and quality requirements would be satisfied.

The pounds solids proposal, however, fails to address an essential requirement of the substitution drawback law which requires that in addition to being of same kind and quality, to be eligible for drawback, the merchandise must be used in the manufacture or production of articles. In interpreting this requirement, the courts have held consistently that "a new and different article must emerge, having a distinctive name, character, and use." (See *Anheuser-Busch Brewing Association* v. *United States*, 207 U.S. 556, 562).

Under the pounds solids proposal, a domestic orange juice product of grade A quality would be substituted for an imported orange juice product of grade A quality, and an orange juice product of grade A quality would be exported. Because all three orange juice products mentioned would be of the same kind and quality, no new and different article of commerce would have emerged from a process of manufacture or production, and an allowance for drawback would be precluded by operation of law.

The USDA standards of grades for orange juice products incorporate by reference the FDA standards of identities. For example, 7 CFR 2852.1581 of the USDA regulations states that

> frozen concentrated orange juice (or frozen orange juice concentrate) is the product as defined in the standards of identity (28 F.R. 10900, 21 CFR 146.146) issued pursuant to the Federal Food, Drug, and Cosmetic Act.

According to the USDA submission, the USDA standards of grades, which incorporate the FDA standards of identities,

> are used by the citrus producing industry, the Commodity Futures Act, supermarket buyers, consumers, and the State of Florida Department of Citrus to define quality levels of various forms of orange juice traded in the marketplace.

Customs concludes, therefore, that the USDA and FDA standards represent industry standards.

For half a century, Customs has used industry standards in its administration of the substitution drawback law. During this extended period, there has not been a judicial challenge to Customs interpretation of the same kind and quality requirements. The pounds solids proposal, discussed above, would result in the abandonment of the FDA standards of identities and, in effect, could make the drawback substitution law inapplicable to orange juice products.

II. Some commenters not in the citrus industry expressed concern that Customs would change its longstanding practice of using industry standards as guidelines in determining same kind and quality. These

commenters suggested if Customs compromises standards accepted by the citrus industry in making same kind and quality determinations relating to orange juice products, it would be granting special treatment to a specific item, and this in turn would endanger the entire drawback substitution program as now constituted. They noted that the standards used by Customs for orange juice products are in fact used by the industry and that is why Customs adopted them in the first instance.

A Texas orange grower commented that the difference between fresh orange juice and orange juice from concentrate is substantial. The commenter noted that fresh orange juice contains natural taste and flavor, but orange juice from concentrate is the derivative of adjustment by man to simulate the character which nature provides. The commenter suggested that to rule that fresh orange juice or pasteurized orange juice is the same kind as orange juice from concentrate would require a change in the FDA and USDA regulations.

A grower-processor from Florida commented that substitution of fresh orange juice for reconstituted orange juice from concentrate would encourage the importation of concentrated orange juice for manufacturing, would affect the domestic market, and a "processor could use this as a 'club' in lowering the field prices of the grower."

In light of Customs determination that the FDA standards of identities and the USDA standards of grades shall continue to be applied, it is unnecessary to address these comments.

III. One processor noted that unlike orange juice products, there are no FDA standards of identities for grapefruit products. This processor also questioned, as a practical matter, whether Customs present practice assists the citrus industry during a disastrous freeze, such as that of January 1977 in Florida, when the industry had to import concentrated orange juice to meet demand.

The commenter is correct in stating there are no FDA standards of identities for grapefruit products. However, the USDA quality grade standards for grapefruit products (7 CFR 2852.1221–1232, 2852.3481–3491, and 2852.6121–6133) define different kinds of grapefruit products. These standards are adaptable for drawback substitution purposes in determining same kind and quality questions in cases in which certain blending processes may produce new products to satisfy the manufacture or production requirements of the substitution drawback law. An FDA proposal to establish standards of identities for grapefruit juice based on the USDA standards and the standards developed by the Codex Alimentarius Commission is pending (43 F.R. 58575).

In response to the processor's second comment, the U.S. International Trade Commission, then the U.S. Tariff Commission, in 1969 reported on its study of the temporary entry provisions of title 19 of the United States Code, which permit exemption from duty or the recovery of duty, including the drawback law. On page 23 of Tariff Commission Publication 286, May 1969, the report states that "the concentrated juice on which duty was returned exceeded total imports of that material in 1965–67 and reflected some imports in 1964, following unusual weather damage to the Florida orange crop." A footnote explains that this is possible because "8 years can elapse from importation to the filing of a claim under drawback." This study indicated that Customs present practice assists the citrus industry in times of natural disasters.

IV. One commenter cited a Customs memorandum dated September 15, 1977, to support the proposal to substitute fresh orange juice for orange juice from concentrate. The memorandum indicated that Customs would allow the substitution of domestic single-strength pineapple juice for single-strength pineapple juice from concentrate. However, the memorandum did not discuss what criteria the juice would have to meet to satisfy the same kind and quality requirement noting that the applicant should indicate the specifications in his drawback statement. The ruling then issued by Customs after receiving the applicant's drawback statement, authorized the substitution of a single-strength domestic pineapple juice for single-strength pineapple juice, both of which met the USDA quality grade standards of 7 CFR 2852.1761–1722. The provisions of 7 CFR 2852.1761 state that canned pineapple juice "means such product as defined in the standard of identity for canned pineapple juice (21 CFR 146.185(a)) issued pursuant to the Federal Food, Drug, and Cosmetic Act." Canned pineapple juice meeting the FDA standard of identity and the USDA grade quality standard was substituted for canned pineapple juice of the same kind and quality. The substituted canned pineapple juice was used to produce a juice medium for packing pineapple. The canned pineapple juice (a noncitrus product) also was used in a blending process with citrus juices, such as orange and grapefruit juices, to produce different products, i.e., blended fruit juices and drinks. This is in accord with present Customs guidelines for orange juice products.

DETERMINATION

The Customs Service affirms its use of FDA standards of identities and USDA standards of grades for orange juice products as guidelines

in determining same kind and quality questions for these products under the substitution drawback law (19 U.S.C. 1313(b)). Customs previous ruling to this effect is affirmed.

Dated: June 2, 1980.

DONALD W. LEWIS,
Director, Office of
Regulations and Rulings.

[Published in the Federal Register, June 10, 1980 (45 F.R. 39244)]

(T.D. 80-154)

Synopses of Drawback Decisions

The following are synopses of drawback rates issued February 27, 1980, to April 4, 1980, inclusive, pursuant to sections 22.1 through 22.5, inclusive, Customs Regulations.

In the synopses below are listed for each drawback rate approved under 19 U.S.C. 1313(a), the name of the company, the specified articles on which drawback is authorized, the merchandise which will be used to manufacture or produce these articles, the factories where the work will be accomplished, the date the statement was signed, the basis for determining payment, the Regional Commissioner who issued the rate, and the date on which it was signed.

(DRA-1-09)

Dated: June 3, 1980.

GEORGE C. STEUART
(For Alfred G. Scholle, Director,
Carriers, Drawback and Bonds Division).

(A) Company: APV Co., Inc.
Articles: Plate heat exchangers, plate evaporators.
Merchandise: Imported and/or drawback steel frames, metal plates, gaskets.
Factory: Tonawanda, N.Y.
Statement signed: December 5, 1979.
Basis of claim: Appearing in.
Rate issued by Regional Commissioner of Customs: Boston, March 31, 1980.

(B) Company: Apollo Dyeing & Finishing Co., Inc.
Articles: Bleached, dyed and/or printed piece goods.
Merchandise: Imported piece goods.
Factory: Paterson, N.J.
Statement signed: February 22, 1980.
Basis of claim: Used in, less valuable waste.
Rate issued by Regional Commissioner of Customs: New York, March 17, 1980.

(C) Company: Control Data Corp.
Articles: ECS11, extended core storage systems.
Merchandise: Imported memory module assemblies, in size 14½ by 17½.
Factories: Bloomington and Roseville, Minn.
Statement signed: February 27, 1980.
Basis of claim: Appearing in.
Rate issued by Regional Commissioner of Customs: Chicago, March 27, 1980.

(D) Company: Cummins Charleston, Inc.
Articles: Diesel internal combustion engines.
Merchandise: Imported component parts.
Factory: Charleston, S.C.
Statement signed: February 22, 1980.
Basis of claim: Appearing in.
Rate issued by Regional Commissioner of Customs: Chicago, March 28, 1980.

(E) Company: Decor, Inc.
Articles: Vinyl laminated hardwood panels.
Merchandise: Imported and/or drawback raw hardwood panels.
Factories: Tualatin, Oreg., Elkhart, Ind., Arlington, Tex.
Statement signed: February 22, 1980.
Basis of claim: Used in.
Rate issued by Regional Commissioner of Customs: San Francisco, March 26, 1980.

(F) Company: Digital Equipment Corp.
Articles: Complete computer systems and computer options.
Merchandise: Imported and/or drawback back planes, memory boards.
Factories: Acton, Marlboro (4), Maynard, Hudson (2), Tewksbury, Natick, Springfield, West Springfield, Westfield, Westminster, Worcester, and Westboro (2), Mass.; Aguadilla and St. German, P.R.; Albuquerque, N. Mex.; Augusta, Maine; Colorado Springs, Colo.; Derry, Merrimack, Nashua (4), and Salem (2), N.H.; South

Burlington, Vt.; Mountain View and Santa Ana, Calif.; Phoenix, Ariz.
Statement signed: October 20, 1978.
Basis of claim: Appearing in.
Rate issued by Regional Commissioner of Customs: Boston, March 19, 1980.

(G) Company: E. I. du Pont de Nemours & Co.
Articles: Cellophane film (slit rolls).
Merchandise: Imported cellophane film (wide rolls).
Factory: Clinton, Iowa.
Statement signed: December 11, 1979.
Basis of claim: Appearing in.
Rate issued by Regional Commissioner of Customs: Baltimore, April 2, 1980.

(H) Company: Fiat-Allis Construction Machinery, Inc.
Articles: Wheel loaders, motor graders, crawler tractors, tractor scrapers, and elevating tractor scrapers, dozers, rippers, and other construction machinery and subassemblies and parts, thereof.
Merchandise: Imported tires, diesel engines, axles and axle housings, track shoes, castings, forgings, and construction machinery parts and subassemblies.
Factories: Deerfield and Springfield, Ill.
Statement signed: January 22, 1980.
Basis of claim: Appearing in.
Rate issued by Regional Commissioner of Customs: Chicago, March 6, 1980.

(I) Company: Filon Division of Vistron Corp.
Articles: Polyester fiberglass panels.
Merchandise: Imported fiberglass roving and carrier films.
Factory: Hawthorne, Calif.
Statement signed: March 17, 1980.
Basis of claim: Used in.
Rate issued by Regional Commissioner of Customs: Los Angeles, April 1, 1980.
Revokes: T.D. 72-186-N and T.D. 72-230-N.

(J) Company: Hickey-Freeman.
Articles: Men's clothing.
Merchandise: Imported and/or drawback fabric.
Factory: Buffalo, N.Y.

Statement signed: February 14, 1980.
Basis of claim: Used in.
Rate issued by Regional Commissioner of Customs: Boston, March 3, 1980.

(K) Company: Hill-Rom Co., Inc.
Articles: Hospital beds.
Merchandise: Imported caster wheels.
Factory: Batesville, Ind.
Statement signed: February 7, 1980.
Basis of claim: Appearing in.
Rate issued by Regional Commissioner of Customs: Chicago, March 27, 1980.

(L) Company: ILC Technology, Inc.
Articles: Fusion research lasers and components.
Merchandise: Imported BK–7 glass, FR–5 glass, LSG91H Nd doped silicate glass, and diamond wire dyes.
Factory: Sunnyvale, Calif.
Statement signed: July 20, 1978.
Basis of claim: Used in.
Rate issued by Regional Commissioner of Customs: San Francisco, February 28, 1980.

(M) Company: International Telephone & Telegraph Corp.
Articles: Finished brake drums.
Merchandise: Imported composite cast iron brake drum castings.
Factory: Tonawanda, N.Y.
Statement signed: January 25, 1980.
Basis of claim: Used in, less valuable waste.
Rate issued by Regional Commissioner of Customs: Boston, April 4, 1980.

(N) Company: Johnson & Towers Baltimore, Inc.
Articles: Generator sets.
Merchandise: Imported and/or drawback generators and diesel engines.
Factory: Baltimore, Md.
Statement signed: January 30, 1980.
Basis of claim: Used in.
Rate issued by Regional Commissioner of Customs: Baltimore, March 21, 1980.

(O) Company: K2 Corp.
Articles: Snow skis.
Merchandise: Imported P-Tex (plastic sheeting) and roll-formed steel.
Factory: Vashon Island, Wash.
Statement signed: January 21, 1980.
Basis of claim: Appearing in.
Rate issued by Regional Commissioner of Customs: San Francisco, March 21, 1980.
Revokes: T.D. 79-129-N.

(P) Company: Martin Marietta Chemicals (Sodyeco Division).
Articles: Dyestuffs.
Merchandise: Imported chemicals.
Factory: Charlotte, N.C.
Statement signed: October 24, 1979.
Basis of claim: Used in.
Rate issued by Regional Commissioner of Customs: Miami, March 17, 1980.
Revokes: T.D. 52633-D, as amended by T.D. 52937-D, T.D. 75-245-E, and T.D. 76-327-J.

(Q) Company: C. H. Masland & Sons (Masland Carpets).
Articles: Automotive carpet, household and ancillary floorcovering, rolled goods of unfinished carpet.
Merchandise: Imported and/or drawback carpet backing of manmade or jute fiber yarn and other manmade fibers for manufacture of carpet.
Factories: Lewistown and Carlisle, Pa.
Statement signed: February 19, 1980.
Basis of claim: Used in.
Rate issued by Regional Commissioner of Customs: Baltimore, March 21, 1980.

(R) Company: Maui Pineapple Co., Ltd.
Articles: Metal containers (cans).
Merchandise: Imported electronic tinplate sheets.
Factory: Kahului, Maui, Hawaii.
Statement signed: December 27, 1979.
Basis of claim: Appearing in.
Rate issued by Regional Commissioner of Customs: San Francisco, February 27, 1980.
Revokes: T.D. 70-189-H, as amended by T.D. 78-379-0, to cover successorship from Maui Container Co.

320-980 O - 80 - 4 : QL 3

(S) Company: National Seating Co.
Articles: Truck and bus seats.
Merchandise: Imported fabric piece goods.
Factory: Mansfield, Ohio.
Statement signed: January 11, 1980.
Basis of claim: Appearing in.
Rate issued by Regional Commissioner of Customs: New York, March 6, 1980.

(T) Company: Owatonna Manufacturing Co., Inc.
Articles: Loaders and self-propelled windrowers.
Merchandise: Imported engines.
Factories: Owatonna, Minn. and Mitchell, S. Dak.
Statement signed: February 28, 1980.
Basis of claim: Used in.
Rate issued by Regional Commissioner of Customs: Chicago, March 27, 1980.

(U) Company: Stonecutter Mills Corp.
Articles: Dyed piece goods.
Merchandise: Imported piece goods.
Factory: Spindale, N.C.
Statement signed: February 28, 1980.
Basis of claim: Used in, less valuable waste.
Rate issued by Regional Commissioner of Customs: New York, March 26, 1980.

(V) Company: Timex Corp.
Articles: Watch cases, bezel/crystal assemblies, bezel/crystal push button assemblies, watches, caseback/bezel assemblies.
Merchandise: Imported and/or drawback watch glasses, cases, movements, batteries.
Factories: Little Rock, Ark. (2).
Statement signed: January 31, 1980.
Basis of claim: Appearing in.
Rate issued by Regional Commissioner of Customs: Boston, March 4, 1980.

(W) Company: The Trane Co., Transport Division.
Articles: Refrigeration systems.
Merchandise: Imported diesel engines.
Factory: Montgomery, Ala.
Statement signed: March 24, 1980.
Basis of claim: Appearing in.

Rate issued by Regional Commissioner of Customs: Boston, April 4, 1980.

(X) Company: United Veil Dyeing & Finishing Co.
Articles: Dyed lace piece goods.
Merchandise: Imported lace piece goods.
Factory: Jersey City, N.J.
Statement signed: March 3, 1980.
Basis of claim: Used in, less valuable waste.
Rate issued by Regional Commissioner of Customs: New York, March 26, 1980.
Revokes: T.D. 79-244-I.

(Y) Company: Williams Form Engineering Corp.
Articles: Rock and concrete anchor bolts.
Merchandise: Imported and/or drawback deformed hollow reinforcing bar steel.
Factory: Grand Rapids, Mich.
Statement signed: February 25, 1980.
Basis of claim: Appearing in.
Rate issued by Regional Commissioner of Customs: New York, March 26, 1980.

(Z) Company: Witco Chemical Corp.
Articles: Overbased magnesium sulfonate.
Merchandise: Imported high alkalinity magnesium sulfate process stream.
Factories: Petrolia and Chester, Pa.; Harvey, La.
Statement signed: January 23, 1980.
Basis of claim: Used in.
Rate issued by Regional Commissioner of Customs: New York, March 6, 1980.

(T.D. 80-155)

Foreign Currencies—Daily Rates for Countries Not on Quarterly List

Rates of exchange based on rates certified to the Secretary of the Treasury by the Federal Reserve Bank of New York for the Brazil cruzeiro, People's Republic of China yuan, Hong Kong dollar, Iran rial, Philippines peso, Singapore dollar, Thailand baht (tical), and Venezuela bolivar

The Federal Reserve Bank of New York, pursuant to section 522(c), Tariff Act of 1930, as amended (31 U.S.C. 372(c)), has certified buying rates for the dates and foreign currencies shown below. The

rates of exchange, based on these buying rates, are published for the information and use of Customs officers and others concerned pursuant to part 159, subpart C, Customs Regulations (19 CFR 159, subpart C).

Brazil cruzeiro:	
May 19–23, 1980	$0.0199
People's Republic of China yuan:	
May 19–22, 1980	$0.669165
May 23, 1980	.673174
Hong Kong dollar:	
May 19, 1980	$0.203749
May 20, 1980	.203625
May 21, 1980	.203459
May 22, 1980	.203562
May 23, 1980	.202922
Iran rial:	
May 19–23, 1980	Not available
Philippines peso:	
May 19–23, 1980	$0.1345
Singapore dollar:	
May 19, 1980	$0.462749
May 20, 1980	.463392
May 21, 1980	.466853
May 22, 1980	.463607
May 23, 1980	.467399
Thailand baht (tical):	
May 19–23, 1980	$0.0490
Venezuela bolivar:	
May 19–23, 1980	$0.2329

(LIQ-3-TRODE)

Dated: June 3, 1980.

G. Scott Shreve
(For Chester R. Krayton, Director,
Duty Assessment Division).

(T.D. 80-156)

Foreign Currencies—Variances From Quarterly Rate

Rates of exchange based upon rates certified to the Secretary of the Treasury by the Federal Reserve Bank of New York

The following rates of exchange are based upon rates certified to the Secretary of the Treasury by the Federal Reserve Bank of New

York, pursuant to section 522(c), Tariff Act of 1930, as amended (31 U.S.C. 372(c)), and reflect variances of 5 per centum or more from the quarterly rate published in T.D. 80–103 for the following countries. Therefore, as to entries covering merchandise exported on the dates listed, whenever it is necessary for Customs purposes to convert such currency into currency of the United States, conversion shall be at the following rates:

Australia dollar:	
May 20, 1980	$1.1315
May 21, 1980	1.1340
May 22, 1980	1.1372
May 23, 1980	1.1405
Austria schilling:	
May 19, 1980	$0.077988
May 20, 1980	.077760
May 21, 1980	.078186
May 22, 1980	.078309
May 23, 1980	.078802
Belgium franc:	
May 19-20, 1980	$0.034578
May 21, 1980	.034880
May 22, 1980	.034855
May 23, 1980	.035075
Denmark krone:	
May 19, 1980	$0.177620
May 20, 1980	.177541
May 21, 1980	.179211
May 22, 1980	.179695
May 23, 1980	.180278
Finland markka:	
May 19, 1980	$0.270343
May 20, 1980	.269978
May 21, 1980	.270709
May 22, 1980	.271887
May 23, 1980	.272926
France franc:	
May 19, 1980	$0.237869
May 20, 1980	.238039
May 21, 1980	.240154
May 22, 1980	.240442
May 23, 1980	.242424

Germany deutsche mark:	
May 19, 1980	$0.554785
May 20, 1980	.554600
May 21, 1980	.559190
May 22, 1980	.558815
May 23, 1980	.562272
India rupee:	
May 19–20, 1980	$0.1266
May 21, 1980	.1274
May 22–23, 1980	.1279
Ireland pound:	
May 19, 1980	$2.0625
May 20, 1980	2.0660
May 21, 1980	2.0885
May 22, 1980	2.0840
May 23, 1980	2.0925
Italy lira:	
May 19, 1980	$0.001179
May 20, 1980	.001180
May 21, 1980	.001187
May 22, 1980	.001190
May 23, 1980	.001195
Japan yen:	
May 19, 1980	$0.004367
May 20, 1980	.004410
May 21, 1980	.004456
May 22, 1980	.004463
May 23, 3980	.004520
Malaysia dollar:	
May 19, 1980	$0.457666
May 20, 1980	.457247
May 21, 1980	.460511
May 22, 1980	.457247
May 23, 1980	.462428
Netherlands guilder:	
May 19, 1980	$0.505306
May 20, 1980	.505127
May 21, 1980	.508828
May 22, 1980	.508388
May 23, 1980	.512295

Norway krone:	
May 19, 1980	$0.202634
May 20, 1980	.202799
May 21, 1980	.204082
May 22, 1980	.204583
May 23, 1980	.205170
Portugal escudo:	
May 21, 1980	$0.020284
May 22, 1980	.020367
May 23, 1980	.020408
Sweden krona:	
May 20, 1980	$0.235793
May 21, 1980	.237643
May 22, 1980	.237869
May 23, 1980	.239234
Switzerland franc:	
May 19, 1980	$0.596481
May 20, 1980	.595415
May 21, 1980	.601504
May 22, 1980	.601866
May 23, 1980	.606061
United Kingdom:	
May 19, 1980	$2.2835
May 20, 1980	2.2910
May 21, 1980	2.3305
May 22, 1980	2.3285
May 23, 1980	2.3440

(LIQ-3-TRODE)

Dated: June 3, 1980.

G. SCOTT SHREVE
(For Chester R. Krayton,
Duty Assessment Division).

U.S. Customs Service

General Notice

(TMK-2-RRUEE)

Houseworks, Ltd.

Notice of application for recordation of trade name

On March 27, 1980, there was published in the Federal Register (45 F.R. 20271) a notice of application for the recordation under section 42 of the Act of July 5, 1946, as amended (15 U.S.C. 1124), of the trade name Houseworks, Ltd. The notice advised that prior to final action on the application filed pursuant to section 133.12, Customs Regulations (19 CFR 133.12), consideration would be given to relevant data, views, or arguments submitted in opposition to the recordation and received not later than 30 days from the date of publication of the notice.

The name Houseworks, Ltd., is hereby recorded as the trade name of Houseworks, Ltd., a corporation organized under the laws of the State of Georgia, located at 3937 Oakcliff Industrial Court, Atlanta, Ga. 30340, when applied to doll house accessories and miniature furniture, manufactured in Hong Kong and Taiwan.

Dated: June 4, 1980.

SALVATORE E. CARAMAGNO,
Acting Director,
Office of Regulations and Rulings.

Decisions of the United States Court of Customs and Patent Appeals

(C.A.D. 1247)

TRAVENOL LABORATORIES, INC. *v.* UNITED STATES, NO. 79–40

1. CLASSIFICATION OF IMPORTS—MEDICAL-SURGICAL INTRAVENOUS APPARATUS, ITEM 709.27.

Customs Court judgment holding that certain imported medical or surgical intravenous solution administration sets were properly classified as medical and surgical instruments and apparatus rather than as hose, pipe, or tubing not specially provided for, of rubber or plastics, suitable for conducting gases of liquids, affirmed.

U.S. Court of Customs and Patent Appeals, May 29, 1980

Appeal from U.S. Customs Court, C.D. 4812

[Affirmed]

Robert E. Burke, attorney of record for appellant.

Alice Daniels, Assistant Attorney General, *David M. Cohen*, Director, *Joseph I. Liebman*, Attorney in Charge, Field Office for Customs Litigation.

[Oral argument on May 5, 1980 by *Robert E. Burke* for appellant, and *Sidney N. Weiss* for appellee]

Before MARKEY, *Chief Judge*, RICH, BALDWIN, and MILLER, *Associate Judges*[1] and WINNER, *Judge*.[1]

RICH, Judge.

[1] This appeal is from the judgment of the U.S. Customs Court in *Travenol Laboratories, Inc.* v. *United States*, 83 Cust. Ct. ——, C.D. 4812, 476 F. Supp. 1075 (1979), granting summary judgment in favor of the United States and sustaining the classification of the imported merchandise. We affirm.

[1] Hon. Fred M. Winner, Chief Judge, U.S. District Court for the District of Colorado, sitting by designation.

THE IMPORTED MERCHANDISE

The imports are medical or surgical intravenous solution administration sets. The following is the description by the Customs Court (83 Cust. Ct. at ——, 476 F. Supp at 1076). Reference is made to the drawing in its opinion, which we need not repeat.

> The set—which is in chief value of plastic and used to conduct liquids—consists of approximately 70 inches of plastic tubing, a connector, a protector for the connector, a needle adapter, a protector for the needle adapter, a drip chamber, a Flashball [TM] injection site, and a Flo-Trol [TM] clamp. The interior fluid path of the set is sterile as imported.
>
> * * * * * * *
>
> The set is chiefly used in the intravenous administration of blood or other medical solutions to patients and operates in the following manner: The connector is inserted into the outlet of a solution container which is suspended. The drip chamber is half filled, whereupon the Flashball injection site over the needle adapter is grasped and its protector removed. A needle is then attached to the needle adapter and air is removed from the set. The Flo-Trol clamp is then closed and venipuncture performed. After this, the Flashball is squeezed and released and, if the needle is properly inserted into the vein, the blood flows back into the needle adapter. The Flo-Trol clamp is then moved to regulate the flow of the medical solution to the patient.

STATUTES INVOLVED

The following provisions of the Tariff Schedules of the United States (TSUS) are involved:

Classified under:
Schedule 7, part 2:

SUBPART B.—MEDICAL AND SURGICAL INSTRUMENTS AND APPARATUS; X-RAY APPARATUS

* * * * * * *

	Medical, dental, surgical and veterinary instruments and apparatus (including electromedical apparatus and opthalmic instruments), and parts thereof:	
	* * * * * * *	
	Other:	
	* * * * * * *	
709.27	Other	18% ad val.

Claimed under:
Schedule 7, part 12:

SUBPART C.—SPECIFIED RUBBER AND PLASTICS PRODUCTS

* * * * * * *

772.65	Hose, pipe, and tubing, all the foregoing not specially provided for, of rubber or	

plastics, suitable for conducting gases or liquids, with or without attached fittings	4% ad val.

CUSTOMS COURT

The Customs Court rejected appellant's claim that the sets are more specifically provided for as tubing n.s.p.f. under TSUS item 772.65 than as medical/surgical apparatus under item 709.27. It held the reverse to be true.

The court discussed the issue of relative specificity. It called attention to general interpretative rule 10(c), which provides that an article which is susceptible of classification under more than one item is to be classified under the item which most specifically provides for it, finding the rule applicable in the instant case.

The court observed that the present conflict is between a use provision (item 709.27) and an eo nomine provision (item 772.65). The court applied the rule that, in the absence of contrary legislative intent, a use provision is generally more specific than an eo nomine provision. The court noted that item 772.65 is a "basket provision" and applied the principle that such provisions are not to prevail where the article is specially provided for elsewhere in an item which is not qualified by a "not specially provided for" clause. The court found no legislative intent which would preclude application of this principle.

Finally, the court distinguished the cases relied upon by appellant because it found that the TSUS items which they involved were different from those in the case at bar, each having different limitations not applicable to the present case. Furthermore, the TSUS items involved in those cases were found by the court to be general versus eo nomine provisions, whereas here the provisions involved are eo nomine and use provisions, with the eo nomine (tubing) provision containing a "not specially provided for" limitation. The court held that in such a circumstance the eo nomine provision is the less specific of the two.

OPINION

We find no error in the well-reasoned opinion of the Customs Court. Judge Maletz properly applied the law to the facts here involved. We hereby adopt the reasoning of the opinion of the Customs Court as our own.

The judgment of the Customs Court is *affirmed*.

Decisions of the United States Customs Court

United States Customs Court
One Federal Plaza
New York, N.Y. 10007

Chief Judge

Edward D. Re

Judges

Paul P. Rao
Morgan Ford
Scovel Richardson
Frederick Landis
James L. Watson
Herbert N. Maletz
Bernard Newman
Nils A. Boe

Senior Judge

Samuel M. Rosenstein

Clerk

Joseph E. Lombardi

Customs Decision

(C.D. 4857)

DAVID E. PORTER, PLAINTIFF, *v.* UNITED STATES, DEFENDANT

Seats for Rapid Transit Cars—Furniture—Parts for Rail Vehicles

Court No. 76-6-01448

(Dated May 21, 1980)

Arter Hadden & Hemmendinger (*Barry E. Cohen* and *Richard S. Green* on the memorandum) for the plaintiff.

Alice Daniel, Assistant Attorney General; *Joseph I. Liebman*, Attorney in Charge, Field Office for Customs Litigation (*Madeline B. Kuflik* on the memorandum), for the defendant.

LANDIS, Judge: Pursuant to the per curiam order of the Court of Customs and Patent Appeals remanding this cause to this court to reconsider plaintiff's motion to amend judgment and for further proceedings, this court has reconsidered plaintiff's said motion, previously dismissed, and adhered to its earlier ruling. On its own motion, in view of the defendant's recent memorandum filed March 28, 1980, stating in substance there are no differences for classification purposes in the seats therein involved and listed on plaintiff's invoices, the previous judgment of this Court in *David E. Porter* v. *United States*, 82 Cust. Ct. 259, C.D. 4808, 475 F. Supp. 688 (1979), is now amended as stated herein and in the attached order amending judgment. Further background for this opinion may be found in a Customs rules decision with the same title, at 83 Cust. Ct. 166, C.R.D. 79–16 (1979).

Briefly restated, the facts are these: On June 22, 1979, on cross-motions for summary judgment, the Court concluded, in a written opinion and decision, that the merchandise in issue viz: "transverse rapid transit seats used exclusively in San Francisco Bay Area Rapid Transit (BART) rail vehicles," 82 Cust. Ct. at 260 (italic supplied), should be classified as parts of rail vehicles (TSUS item 690.40) rather than as furniture as classified by Customs (TSUS item 727.55).

Forty-six days after decision and judgment and eight days prior to defendant's appeal, to wit: on August 7, 1979, plaintiff moved, pursuant to Customs Court rule 12.2 for an order amending the June 22, 1979 judgment entered in plaintiff's favor. As this court noted in C.R.D. 79–16, the crux of plaintiff's argument appeared in one paragraph:

> Upon review of the Court's decision and the entry papers in this case, *counsel belatedly recognizes an oversight* in the merchandise described *in its summary judgment motion.* Although the merchandise embraced by the entries in litigation include transverse seats, window seats (both of which are mounted at a right angle to the direction of travel), and longitudinal seats (mounted in the direction of travel), *plaintiff's motion inadvertently addressed only the transverse seats. It should have included the window and longitudinal seats, as these are similar in design* to the transverse seats and are exclusively dedicated as parts of the BART rail vehicle. * * * (Plaintiff's motion to amend judgment, pp. 2–3.) [*Emphasis* supplied.]

The defendant responded that the plaintiff's appellation of its motion, as a motion to amend judgment, was incorrect. In its opposition, the defendant argued:

> * * * The relief sought by plaintiff is for the court to broaden its decision in C.D. 4808 to include merchandise which was not included or considered in the original motion, even though plaintiff had the opportunity to seek adjudication of the classi-

> fication of the other seats in the original motion. * * * The relief sought is more than the mere correction of a clerical error. It is a matter of substance affecting the substantial rights of the parties. * * * " (Defendant's opposition to plaintiff's motion to amend judgment, pp. 2–3.)

Defendant urged that the plaintiff's motion actually constituted a motion for rehearing. So perceived, the motion would have to be dismissed as untimely since by statute, a rehearing in this Court must be sought not later than 30 days after entry of judgment. See 28 U.S.C. 2639 and also Customs Court rule 12.1(a), both of which are set out in C.R.D. 79–16. On September 13, 1979, this court ordered that the plaintiff's motion be dismissed as it "was plainly improper for many reasons." See 83 Cust. Ct. at 169, C.R.D. 79–16.

Further procedural motions are detailed in C.R.D. 79–16; for present purposes, the next significant event occurred on October 4, 1979, when plaintiff cross-appealed to the Court of Customs and Patent Appeals (appeal 80–1) seeking review of the September 13 order.

On February 25, 1980, the Court of Customs and Patent Appeals entered the following per curiam order:

> The court has considered David E. Porter's motion for summary reversal in Customs appeal No. 80–1 and motion to dismiss Customs appeal No. 79–30, the Government's motion to dismiss Customs appeal No. 80–1, and the responses thereto.
>
> It appears from these papers that the judgment of the U.S. Customs Court dated June 22, 1979 (C.D. 4808), which Porter unsuccessfully sought to amend, and from which Customs appeal No. 79–30 has been taken, adjudicates the classification of only a portion of the merchandise which is the subject of the protest and complaint filed by Porter. The protest and complaint are directed to seats, or parts thereof, for rapid transit cars destined for use in the Bay Area Rapid Transit (BART) system. The judgment of June 22, 1979, appears to only cover transverse rapid transit seats. The subject entries apparently include transverse, longitudinal, and window seats. This court does not recognize any substantive distinctions with regard to classification of a transverse seat versus a longitudinal or window seat as urged by the Government in its attempt to characterize the motion to amend an apparent error in the lower court judgment as a motion for rehearing.
>
> Accordingly, these appeals are remanded to the U.S. Customs Court to reconsider Porter's motion to amend judgment of June 22, 1979, which was dismissed on September 13, 1979, and for any further proceedings which may be deemed necessary consistent with this order.

This court, then, is "to reconsider Porter's motion to amend judgment of June 22, 1979."

Porter's motion was made pursuant to Customs Court rule 12.2 which provides:

RULE 12.2 AMENDMENT OF JUDGMENTS

(a) *Clerical mistakes.*—Clerical mistakes in judgments, orders, or other parts of the record, and errors therein arising from oversight or omission, may be corrected by the court at any time on its own initiative or on the motion of any party.

(b) *Mistakes, inadvertence, excusable neglect.*—On motion and upon such terms as are just, the court may relieve a party or his legal representative from a final judgment, order, or proceeding for mistake, inadvertence, surprise, or excusable neglect.

(c) *Harmless error.*—No error in either the admission or the exclusion of evidence and no error or defect in any ruling or order or in anything done or omitted by the court or by any of the parties is ground for granting a new trial or for vacating, modifying, or otherwise disturbing a judgment or order, unless refusal to take such action appears to the court inconsistent with substantial justice. At every stage of the proceeding, the court shall disregard any error or defect which does not affect the substantial rights of the parties.

Plaintiff did not delineate before this court which of the three subsections purportedly encompassed his motion. However, the "harmless error" subsection has not been argued and is inapplicable. Before the CCPA, plaintiff pressed 12.2(*a*) but urged 12.2(*b*) alternatively in a footnote.

No prior decision of this court has interpreted either rule 12.2 (a) or (b). However, the first sentences of Federal Rules of Civil Procedure 60 (a) and (b), from which rules 12 (a) and (b) were derived, are practically identical to this court's rules and have been examined by the Federal courts.

The relevant language from Federal rule 60(a) is: "Clerical mistakes in judgments * * * and errors therein arising from oversight or omission may be corrected * * *." Cases interpreting this rule demonstrate conclusively that there was no clerical error in this case.

At one time, rule 60(a) was confined to errors by the clerk. So, in *West Virginia Oil & Gas Co., Inc.* v. *George E. Breece Lumber Co., Inc., et al.*, 213 F. 2d 702, 705 (5th Cir. 1954), the Court wrote: "A clerical error is generally defined as an error made by a clerk in transcribing or otherwise." In 1967, Judge Bartels of the Eastern District of New York explained that "(t)he term 'clerical mistake' does not mean that it must be made by a clerk." *In re Merry Queen Transfer Corp.*, 266 F. Supp. 605, 607 (E.D.N.Y. 1967). That opinion continues:

> * * * The phrase merely describes the type of error identified with mistakes in transcription, alteration, or omission of any papers and documents which are traditionally or customarily handled or controlled by clerks but which papers or documents may be handled by others. It is a type of mistake or omission mechanical in nature which is apparent on the record and which

> does not involve a legal decision or judgment by an attorney. * * * (Id.)

According to a recent district court decision in Texas: "(i)t is well settled that clerical error specifically refers to error of transcription, copying, or calculation." *International Corporate Enterprises, Inc.* v. *Toshoku Ltd.*, 71 F.R.D. 215, 218, (N.D. Tex. 1976).

The crux of plaintiff's motion to amend judgment before this court is set out above. In sum, plaintiff's motion stated that:

> * * * *counsel belatedly recognizes an oversight in the merchandise described in its summary judgment motion.* * * *plaintiff's motion inadvertently addressed only the transverse seats.* (Plaintiff's motion to amend judgment, p. 2.) [Italic supplied]

Obviously the difficulty was neither a clerical error nor one of this court.

Yet before the Court of Customs and Patent Appeals, the entire basis for plaintiff's motion somehow was transformed. Now, Porter argued in his brief:

> *To correct the court's technical misdescription of the seats* [italic supplied], on August 7, 1979 Porter moved under Customs Court rule 12.2 to amend the court's opinion to substitute the proper product description—"transverse, window and longitudinal seats"—for "transverse" seats. (Brief in opposition to motion to dismiss appeal No. 80–1, in support of motion to dismiss appeal No. 79–30, and for reversal in appeal No. 80–1 (hereinafter plaintiff's first CCPA brief), pp. 5–6.)

Later in the same brief, plaintiff states:

> We believe that the facts make it abundantly clear that Porter's motion to amend was not a motion for rehearing but that it properly sought, under Customs Court rule 12.2(a), *only to rectify a technical error arising from mere oversight or omission—to wit, an editorial misdescription in the court's opinion.* * * * (Plaintiff's first CCPA brief, p. 9.) [Italic supplied.]

Then plaintiff writes:

> Unfortunately, the Customs Court relied on one of Porter's references to "transverse seats" in writing its opinion. Porter's motion to amend the judgment merely sought to correct this editorial error. * * * (Id., 11.)

Later, plaintiff insists the motion "was directed to a mere editorial matter."

At another point, plaintiff writes:

> * * * the motion merely seeks an editorial change in the court's opinion to clarify the description of the merchandise which the entries contain. (Id., 14.)

(Note that by plaintiff's own admission the consumption entry papers contained no distinctions as to the seats. Id., 5.) What the Customs

Court must do is "make an appropriate technical correction to its opinion." Id., 17. After all this, the matter has become a simple one for plaintiff: "All that is required is a correction of the record to make it 'speak the truth'." Id., 14.

Somewhere between New York and Washington, the truth changed from "counsel belatedly recognizes (his personal) oversight" (in its motion) to "a technical error * * * in the court's opinion." Sometime between the motion to amend judgment here, on August 7, 1979, and plaintiff's first CCPA brief, filed December 17, 1979, what was "plaintiff's motion inadvertently addressed only (to) the transverse seats" became an "editorial error" by this court.

Speaking the truth, there was no clerical technical misdescription mistake by this court.

Since there was no mistake by this court, plaintiff's motion only is tenable under rule 12.2(b). The critical language there is that "the court *may* relieve a party or his legal representative" from a mistake. (Italic supplied.) Relief is discretionary.

Pursuant to the Court of Customs and Patent Appeals' order, and exercising that discretion, the following order was issued by this court on March 10, 1980:

> In furtherance of the February 25, 1980 per curiam order of the U.S. Court of Customs and Patent Appeals in this case, each party hereby is instructed to prepare a memorandum, with affidavits, concerning the following questions: Are the characteristics of the longitudinal and window seats apparently involved in the subject entries different from, for the purposes of classification under the Tariff Schedules of the United States, the transverse seats considered in *David E. Porter* v. *United States*, 82 Cust. Ct. 259, C.D. 4808, 475 F. Supp. 688 (1979)?
>
> The memoranda and affidavits shall be filed with the clerk of this court on or before April 2, 1980.

The critical memorandum was filed by the defendant who wrote:

> We have been advised by the U.S. Customs Service that the longitudinal and window seats are similar in design to the transverse seats. There are only minor design differences relating to the location of the seats within the BART rail vehicle.
>
> Accordingly, for substantive classification purposes, there are no differences between the transverse seats which were the subject of this court's decision in C.D. 4808, and the longitudinal and window seats which are listed on plaintiff's invoices. (Defendant's memorandum, pp. 1–2, Mar. 28, 1980.)

Now, as the Government (the defendant) for the first time has conceded that there are no substantial distinctions with regard to classification of transverse seats versus longitudinal and window seats, listed on plaintiff's invoices, this court accordingly amends its June 22, 1979 judgment to include said longitudinal and window seats.

Decisions of the United States Customs Court

Customs Rules Decisions

(C.R.D. 80–5)

PPG INDUSTRIES, INC., PLAINTIFF, *v.* UNITED STATES, DEFENDANT

Memorandum opinion re defendant's motion to dismiss

Consolidated Court No. 77–10–04458

(Dated May 23, 1980)

Eugene L. Stewart for the plaintiff.

Alice Daniel, Assistant Attorney General (*Joseph I. Liebman,* Attorney in Charge, Field Office for Customs Litigation; *James A. Resti,* trial attorney), for the defendant.

BOE, Judge: In the above-entitled consolidated action, the merchandise in question consisting of bipolar diaphragm electrolyzers and parts were entered at the ports of entry at Houston and Galveston, Tex., Philadelphia, Pa., and New Orleans, La., between 1969 and 1973. The plaintiff claiming the merchandise in question through error and mistake was not classified as experimental and, accordingly, free from duty, has brought the within action pursuant to sections 1514(a)(7) and 1520(c)(1) and 28 U.S.C. section 1582(a). 19 U.S.C. section 1520(c)(1) provides as follows:

> (c) *Reliquidation of entry.*—Notwithstanding a valid protest was not filed, the appropriate customs officer may, in accordance with regulations prescribed by the Secretary, reliquidate an entry to correct—
>
> (1) a clerical error, mistake of fact, or other inadvertence not amounting to an error in the construction of a law, adverse to the importer and manifest from the record or established by documentary evidence, in any entry, liquidation, or other Customs transaction, when the error, mistake, or inadvertence is brought to the attention of the Customs Service within 1 year after the date of entry, or transaction,

> or within 90 days after liquidation or exaction when the liquidation or exaction is made more than 9 months after the date of the entry, or transaction; * * *.

To the action commenced by the plaintiff, the defendant has filed a motion to dismiss for lack of jurisdiction premised on the fact that "requests for reliquidation were not filed within the time period provided for in 19 U.S.C. section 1520(c)(1)."

By order of this court under date of March 21, 1980, a date for oral argument of defendant's motion to dismiss was fixed and determined and which time the court requested that appropriate evidence be presented by the respective parties as to the following:

> (a) the nature of and the manner by which any alleged clerical error, mistake of fact or other inadvertence, not amounting to any error in the construction of a law, in connection with the liquidation of the merchandise in the above-entitled action was brought to the attention of the Customs Service, together with the date and/or dates thereof; and
>
> (b) the nature and contents of all responses made by the Customs Service relating to the alleged errors, mistakes of fact or inadvertence which may have been brought to their attention together with the date and/or dates thereof.

At the time of oral argument plaintiff submitted an offer of proof and/or a compilation of evidentiary facts together with certain exhibits annexed thereto. In view of the uncertainty expressed by plaintiff's counsel with respect to the intended purport of this court's order requesting an evidentiary hearing, the parties were advised by the court upon completion of argument that after examination of the offer of proof and/or compilation of facts submitted by the plaintiff and the defendant's response to be submitted in connection therewith, a date for an evidentiary hearing subsequently would be determined.

After full consideration of the arguments, the offer of proof and/or compilation of evidentiary facts submitted by the plaintiff, as well as other memoranda submitted by respective counsel, the court is satisfied that the timeliness as to when any error, mistake or inadvertence may have been brought to the attention of the Customs Service is in dispute, and that a preliminary evidentiary hearing will not serve to permit an orderly and complete presentation of the facts required to be determined under the provisions of 19 U.S.C. section 1520(c)(1). From the offer of proof and/or the compilation of facts submitted by the plaintiff at the time of oral argument, as well as from the references made by counsel during argument with respect to the

administrative history [1] relating to many of the entries involved in the within action, it appears that the evidence to be adduced with respect to the compliance with the prerequisites provided in 19 U.S.C. section 1520(c)(1) are inextricably intermeshed with the evidentiary facts relating to the merits of the action. To proceed at this juncture with a preliminary evidentiary hearing predictably will result in a fragmented, piecemeal adjudication of the within action which would prove prejudicial to both the plaintiff and the defendant. Accordingly, the court in its sound discretion deems it proper and in the interest of justice to defer its determination of defendant's motion to dismiss until such time as more full and complete evidence can be submitted through regular trial procedure.

In deferring a determination of defendant's motion until a trial on the merits of the within action, the court is not unmindful of the case of *United States* v. *Boe*, 64 CCPA 11, 15 C.A.D. 1177, 543 F. 2d 141 (1976) nor of the case of *Hambro Automotive Corp.* v. *United States*, C.A.D. 1231, 603 F. 2d 850 (1979). In the former case an attempt of the trial court to retain jurisdiction over the cause of action by the denial of the Government's motion to dismiss for lack of jurisdiction was held to be unwarranted in view of the patent and undisputed premature filing of a protest prior to liquidation. In *Hambro* the record before the trial court was deemed sufficient to justify its affirmative determination of the Government's motion to dismiss for lack of jurisdiction. The refusal of the trial court to receive testimony as to the nature of the alleged mistake was deemed not to be an abuse of discretion.[2] In view of the fact that the nature of the mistake provided for in 19 U.S.C. section 1520(c)(1) could be clearly ascertained from the record and pleadings before the court, the dismissal of the action by the trial court was deemed appropriate.

It is well settled, as urged by the defendant, that, when challenged, it is the burden of the plaintiff to establish the jurisdiction of the court. *Gibbs* v. *Buck*, 307 U.S. 66 (1939). As stated in *Gibbs* v. *Buck*, however, "As there is no statutory direction for procedure upon an issue of jurisdiction, the mode of its determination is left to the trial court." Id. at 71–72.

Thus, in the case of *Land* v. *Dollar*, 330 U.S. 731 (1947), the U.S. Supreme Court stated:

> (A)lthough as a general rule the district court would have authority to consider questions of jurisdiction on the basis of

[1] For example, evidence relating to certain penalty proceedings to which the entries in the within consolidated action were originally involved may be material herein.

[2] No discussion is contained in the *Hambro* case as to the matter of timeliness provided for in 19 U.S.C. 1520(c)(1) nor reference made to its prior decision of *Madden Machine Co.* v. *United States*, 61 CCPA 97, C.A.D. 1130, 499 F. 2d 1294 (1974), wherein the affirmative assertion was made that timeliness of a request to reliquidate under sec. 1520(c)(1) goes to the merits of the district director's refusal to reliquidate.

> affidavits as well as the pleadings, this is the type of case where the question of jurisdiction is dependent on decision of the merits. (Id. at 735.)

The Court continued:

> We only hold that the district court has jurisdiction to determine its jurisdiction by proceeding to a decision on the merits. (Id. at 739.)

It is manifest, therefore, that when it appears that the question of jurisdiction is intermeshed with facts also relating to the merits of an action, judicial discretion is called for in the exercise of its timely determination of a challenged jurisdiction. In the case of *Zunamon* v. *Brown*, 418 F. 2d 883 (8th Cir. 1969), the U.S. Court of Appeals for the Eighth Circuit concisely places this judicial obligation in perspective:

> There is no one single solution to the question here presented. The scope of the pretrial jurisdictional inquiry must of necessity turn upon the specific pleadings and facts involved in each particular case. Yet in resolving the question of the appropriateness of jurisdiction as measured by the legal certainty of plaintiff's claim, all doubts should be resolved by the district court in favor of allowing a plenary trial rather than a peremptory trial under the guise of an evidentiary jurisdictional hearing. (Id. at 886.)

A similar expression of the general rule is found in the case of *McBeath* v. *Inter-American Citizens for Decency Committee*, 374 F. 2d 359 (5th Cir. 1967):

> Undoubtedly, under rule 12(d) of the Federal Rules of Civil Procedure a court may determine the prerequisites to jurisdiction in advance of a trial on the merits. However, where the factual and jurisdictional issues are completely intermeshed jurisdictional issues should be referred to the merits, for it is impossible to decide the one without the other. [Cases cited.] (Id. at 362–63.)

The defendant's motion challenging the lack of jurisdiction of this court over the subject matter of the within action properly cannot be determined from the pleadings nor the record presently before this court. On the contrary, the offer of proof and/or compilation of evidentiary facts submitted by the plaintiff at the time of oral argument serve to indicate to the court that the evidentiary facts necessary to controvert the jurisdiction challenged by the defendant concurrently are necessary in the submission and ultimate determination of the within action on the merits.

This court indicates no opinion as to the sufficiency of the evidence which may be ultimately submitted by the plaintiff. Suffice it to say, that in the within proceeding this court would deem it an abuse of discretion and prejudicial to the plaintiff to require at this juncture

what has been aptly termed a preemptory trial as to the subject matter of jurisdiction challenged by the defendant.

Accordingly, the determination of defendant's motion to dismiss the within action for lack of jurisdiction of the subject matter will be deferred until the trial of the within action on the merits.

Pursuant to rule 4.7(a)(5) of this court, the defendant is granted a period of 30 days from and after the entry of this memorandum opinion to interpose an answer to plaintiff's complaint.

(C.R.D. 80–6)

SPRAGUE ELECTRIC COMPANY, PLAINTIFF, *v.* UNITED STATES (CAPAR COMPONENTS CORP., PARTY-IN-INTEREST), DEFENDANT

Memorandum and Order on Plaintiff's Motion for Rehearing

Court No. 77–9–03056

[Motion granted in part.]

(Dated May 23, 1980)

Frederick L. Ikenson, Esq., for the plaintiff.

Alice Daniel, Assistant Attorney General, *David M. Cohen*, Director, Commercial Litigation Branch, *Joseph I. Liebman*, Attorney in Charge, Field Office for Customs Litigation, and *Sidney N. Weiss*, trial attorney, for the defendant.

NEWMAN, Judge: Pursuant to rules 12.1 and 4.12 of this court, plaintiff has moved for a rehearing and reconsideration of certain aspects of the decision entered in this case on March 27, 1980 (C.R.D. 80–3).

Briefly, the background of this litigation is as follows: Plaintiff, an American manufacturer of tantalum electrolytic fixed capacitors, has brought this action under 19 U.S.C. 1516(c) (1976) challenging the negative injury determination of the U.S. International Trade Commission (Commission) in investigation No. AA1921–159 (41 F.R. 47604 (1976)), under the Antidumping Act of 1921, as amended (19 U.S.C. 160, et seq. (1970)). That investigation involved tantalum electrolytic fixed capacitors imported from Japan which the Department of the Treasury (Treasury) had determined were being or were likely to be sold in the United States at less than fair value (LTFV) within the meaning of the Antidumping Act, as amended.

Plaintiff contests the Commission's negative injury determination on several grounds, and the parties filed cross-motions for summary judgment contending that there is no genuine issue as to any material

fact. In C.R.D. 80–3, I found, inter alia, that in making its negative determination, the Commission relied upon substantially erroneous import statistics which grossly understated the true value of Japanese tantalum capacitor imports. I agreed with the defendant's contention that if the Commission's original determination could not be sustained because of the incorrect import statistics, an appropriate remedy would be to stay the proceedings in this court pending a new determination by the Commission in light of the correct statistical information. Accordingly, my order denied the cross-motions for summary judgment, and further ordered:

> 2. Proceedings in the instant case shall be stayed pending a reconsideration by the Commission of its original determination in investigation No. AA1921–159 and the taking of a new vote on the question of whether, in light of the correct import statistics for tantalum electrolytic fixed capacitors from Japan, sales of such merchandise at LTFV were injuring or were likely to injure an industry in the United States within the meaning of the Antidumping Act of 1921, as amended; and the Commission may conduct any further proceedings which it deems appropriate, but consistent with this order;
>
> 3. The Commission shall, through counsel for defendant, submit to the court within 90 days from the date of entry of this order (on or before June 25, 1980) its new determination, whether affirmative or negative, together with a complete statement of findings and conclusions, and the reasons or bases therefor, on all material issues of fact or law presented, including the materiality of the corrected import statistics on the Commission's new determination.

In support of its motion for rehearing, plaintiff urges that in making its new determination, the Commission

> should be instructed to include in its deliberations the consideration of Nippon Electric Co.'s plans to increase productive capacity for, and exportation to the United States of, epoxy dipped tantalum electrolytic fixed capacitors (memorandum, at 5).

In C.R.D. 80–3, I made reference to footnote 3 of the Commission majority's statement of reasons (41 F.R. 47605), and agreed with the approach of Commissioner Moore and Commissioner (now Chairman) Bedell in their finding of no likelihood of injury. As stated in footnote 3, Commissioners Moore and Bedell believed that

> since no LTFV margins were found in NEC [Nippon Electric Co.] sales of epoxy dipped capacitors, * * * NEC's anticipated increase in exports of such capacitors to the United States should not be used as a basis for a finding of likelihood of injury.

Nevertheless, as also pointed out in C.R.D. 80–3, in its statement of reasons the Commission majority found there was no likelihood of injury as a result of the LTFV imports, notwithstanding a planned

expansion of Japanese capacity to produce tantalum capacitors in 1976 and 1977, and an anticipated increase in 1977 exports by one Japanese producer.

Upon further review of the issue, I have determined that the Commission should additionally consider in its deliberations on remand, the effect of Nippon's plans to increase productive capacity for, and exportation to the United States, of epoxy dipped tantalum electrolytic fixed capacitors, as requested by plaintiff. I am persuaded to agree with this view by the cogent rationale of Commissioner Parker in his statement of reasons for affirmative determination, in which he concludes that Treasury's decision not to sever or eliminate Nippon's "dipped" capacitors from the class or kind of tantalum capacitors embraced by its LTFV determination (see C.R.D. 80–3, footnote 6) is binding upon the Commission as a matter of law; and "that (the) Commission has no authority to refine or modify the class or kind of merchandise found to be, or likely to be, sold at LTFV". Therefore, with respect to plaintiff's request that the Commission "should be instructed to include in its deliberations the consideration of Nippon Electric Company's plans to increase productive capacity for, and exportation to the United States of, epoxy dipped tantalum electrolytic capacitors", the motion for rehearing is granted.

The only other issue raised by the present motion that warrants comment is whether, as contended by plaintiff, the decision in C.R.D. 80–3 constitutes the sustaining in part of plaintiff's cause of action within the purview of 19 U.S.C. 1516(g)(1976), and hence whether, pursuant to that statute, liquidation of entries of the subject merchandise should be suspended. I am unable to agree with plaintiff's contention.

In C.R.D. 80–3, plaintiff's motion for summary judgment was denied, and there was no motion for partial summary judgment. In staying the proceedings before the court pending reconsideration by the Commission of its original determination and the taking of a new vote, the court has not thereby sustained in part plaintiff's cause of action. In point of fact, originally plaintiff opposed the granting of a remand of the proceedings to the Commission. Finally, with regard to the merits, there has as yet, been no judicial decision in this case that an affirmative injury determination by the Commission was required as a matter of law. Significantly, C.R.D. 80–3 states:

> If in light of the correct import statistics, the Commission can still demonstrate a rational basis for a negative determination, this court will be obliged to sustain such determination.

For the foregoing reasons, it would be improper at this juncture to require the Customs Service to suspend the liquidation of entries of the subject merchandise under 19 U.S.C. 1516(g).

I have carefully considered plaintiff's other arguments in support of its motion for rehearing, and find them lacking in merit.

For the reasons expressed herein, it is hereby ordered:

1. That plaintiff's motion for rehearing is granted to the extent that the Commission is directed to consider in its deliberations on remand the effect of Nippon Electric Co.'s plans to increase productive capacity for, and exportation to the United States, of epoxy dipped tantalum electrolytic fixed capacitors.

2. That the decision in C.R.D. 80–3 is adhered to in all other respects, and the application is denied as to all other issues raised by plaintiff's motion for rehearing.

Appeal to U.S. Court of Customs and Patent Appeals

APPEAL 80–29.—Armstrong Bros. Tool Co. et al. *v.* United States (Great Neck Saw Manufacturing, Incorporated, Party-in-Interest).—AMERICAN MANUFACTURERS' ACTION—NONPOWERED HAND TOOLS—NEGATIVE INJURY DETERMINATION—ANTIDUMPING ACT—SUMMARY JUDGMENT. Appeal from C.D. 4848.

In this case plaintiffs-appellants, domestic manufacturers and/or wholesalers of certain nonpowered hand tools, instituted an American manufacturers' proceeding in the Customs Court pursuant to 19 U.S.C. 1516(c) (1976), to challenge the determination by the U.S. International Trade Commission (Commission) in investigation No. AA1921–149 (40 F.R. 57517 (1975)), under the Antidumping Act of 1921, as amended (19 U.S.C. 160, et seq (1970)), that an industry in the United States is not being or is not likely to be injured or is not prevented from being established by reason of imported chisels, punches, hammers, sledges, vises, C-clamps, and battery terminal lifters from Japan, sold at less than fair value (LTFV). The actions of the Commission, the Commission staff, and the Secretary of the Treasury by eliminating from the scope of the Commission's investigation battery service tools other than battery terminal lifters were also contested. On motion for summary judgment before the Customs Court, plaintiffs contended that the Commission's negative injury determination was arbitrary, capricious, and not supported by substantial evidence and should be set aside; that the Secretary of the Treasury's amendment of the LTFV determination so as to exclude from the term "battery service tools" all tools other than battery terminal lifters after transmittal of the antidumping investigation to the Commission was ultra vires. The Government cross-moved for summary judgment in its favor. The Customs Court rejected plaintiffs claims, granted defendant-appellee's cross-motion for summary judgment, and dismissed the action.

It is claimed that the Customs Court erred in finding and holding that the negative injury determination of the U.S. International Trade Commission in *Chisels, Punches, Hammers, Sledges, Vises,*

C-Clamps, and Battery Terminal Lifters from Japan, investigation No. AA1921-149 (40 F.R. 57517 (1975)), under the Antidumping Act of 1921, as amemded (19 U.S.C. 160 et seq. (1970)), was not arbitrary, was supported by substantial evidence, and was not erroneous as a matter of law; in finding and holding that the limiting of the scope of the Commission's investigation and determination to exclude battery service tools other than battery terminal lifters was lawful and not ultra vires on the part of the Secretary of the Treasury, the Commission, and the Commission staff; in not directing the Secretary of the Treasury to publish a finding of dumping covering chisels, punches, hammers, sledges, vises, C-clamps, and battery service tools from Japan; in not directing the Regional Commissioner of Customs at New York (a) to ascertain the foreign market (or constructed) value and the purchase (or exporter's sales) price of any chisels, punches, hammers, sledges, vises, C-clamps, and battery service tools from Japan covered by New York Seaport consumption entry No. 77-471887 of July 20, 1977, and (b) if and to the extent that the foreign market (or constructed) value exceeds the purchase (or exporter's sales) price, to assess dumping duties; in denying the motion of plaintiffs-appellants for summary judgment; in granting the cross-motion of defendant-appellee for summary judgment; in permitting the Secretary of the Treasury to act contrary to law; and in finding and holding for the defendant-appellee, contrary to law.

Recent Unpublished Customs Service Decisions

The following listing of recent administrative decisions issued by the Office of Regulations and Rulings, U.S. Customs Service, and not otherwise published, is published for the information of Customs officers and the importing community. Although the decisions are not of sufficient general interest to warrant publication as Treasury decisions, the listing describes the issues involved and is intended to aid Customs officers and concerned members of the public in identifying matters of interest which recently have been considered by the Office of Regulations and Rulings.

A copy of any decision included in this listing, identified by its date and file number, may be obtained in a form appropriate for public distribution upon written request to the Office of Regulations and Rulings, Attention: Legal Reference Area, room 2404, U.S. Customs Service, 1301 Constitution Avenue NW., Washington, D.C. 20229. These copies will be made available at a cost to the requester of 10 cents per page. However, the Customs Service will waive this charge if the total number of pages copied is 10 or less.

Decisions listed in earlier issues of the CUSTOMS BULLETIN, through December 21, 1979, are available in microfiche format at a cost of $17.70 (15 cents per sheet of fiche). It is anticipated that additions to the microfiche will be made quarterly and subscriptions are available. Requests for the microfiche now available and for subscriptions should be directed to the Legal Reference Area. Subscribers will automatically receive updates as they are issued and will be billed accordingly.

Dated: May 27, 1980.

JOHN T. ROTH,
Acting Director,
Regulations and Research Division.

Date of decision	File No.	Issue
5- 8-80	060674	Classification: Silk screen prints (207.00)
5- 8-80	060701	Classification: Wood mouldings (202.66)
2-26-80	060964	Classification: Disposable heating bag (774.55, 799.00)
5- 5-80	061017	Classification: Backpack with aluminum frame (706.24, 735.20)
4-25-80	061196	Classification: Wood pole drapery hardware packs (206.98, 207.00)
5- 8-80	061754	Classification: Skin-cleansing machine (750.45, 750.47)
4-17-80	061823	American selling price: Men's protective boot (700.60)
4-17-80	061828	American selling price: Men's protective boot (700.60)
5- 8-80	061830	Classification: Wood dowels (200.95, 727.40)
1-30-80	061838	Classification: Quilted toddler jacket (376.56, 382.81)
4-25-80	061847	American selling price: Men's protective boots (700.60)
3-25-80	061885	Classification: Crude coal tar base (401.18, 401.80, 403.90)
3-26-80	061887	Classification: Benzenoid drugs (407.85, 793.00)
4-17-80	061936	American selling price: Men's protective boot (700.60)
4-17-80	061943	American selling price: Men's protective boot (700.60)
4- 4-80	061944	Classification: Whether a label on jeans is ornamental (382.00)
3-25-80	061974	Classification: Radio control toy car (737.40, 737.95)
5- 8-80	062347	Classification: Grain- and seed-cleaning equipment (666.25, 678.50, 870.40)
4- 9-80	062377	Classification: Copper-covered fruit and vegetables (657.30, 748.21)
4-17-80	062757	Classification: Audio magnetic tape cassette (724.40, 724.45, 678.50, 685.40)
4-25-80	062917	Classification: Toy banks (737.95)
5- 8-80	062959	Classification: Phenolic resin (405.25)
4-25-80	063455	Classification: Membership cards (256.58, 270.10, 271.10
5- 8-80	064019	Classification: Citrus molasses (184.85)
4-25-80	064025	Classification: Articles of amber stone (188.30, 520.39, 740.10)
4-11-80	064032	Classification: Paper product (254.80)
4-17-80	064146	Classification: Battery-operated eating aid (682.60, 683.15, 683.32)
4-17-80	064184	Classification: Fire shield for wood or coal-burning stove (657.25)
5- 5-80	064195	Classification: Bonded fiber cloth (770.45, 772.15)
5- 1-80	064202	Classification: Rope-descent article (389.62, 657.40)
5- 5-80	064256	Classification: Plastic scrap (771.15, 793.00)
4-25-80	064282	Classification: Fish scaler (651.47)
4-15-80	064295	Classification: Fiberglass-reinforced bathtubs and showers (770.10, 722.15)
4-17-80	064331	Classification: Electrical paper (253.15, 256.30)
5- 5-80	064349	Classification: Footwear of imitation suede (700.58)
5- 8-80	064360	Classification: Novelty articles (256.90, 389.50, 737.40, 737.95)

Date of decision	File No.	Issue
4-15-80	064361	Classification: Textile linings for hardhats (382.06, 382.33, 382.78, 382.81)
4-25-80	064362	Classification: Cheese scraps (793.00)
3-28-80	064430	Classification: Stretch-dyed twill fabric (338.30, 349.25)
5- 1-80	064433	Classification: Paper plate holder made from palm leaf (222.64)
5- 5-80	064438	Classification: Schnable vehicle (690.35)
5- 1-80	064451	Classification: Anchor bolt (646.54)
5- 5-80	064459	Classification: Hobby horses (737.80, 737.95)
5- 8-80	064476	Classification: Vinyl-coated, fabric-backed wall coverings (355.65, 772.69)
5- 5-80	064478	Generalized system of preferences: Whether tungsten ore is imported directly from a beneficiary developing country
5- 8-80	064495	Classification: Whether piping on ski jacket is ornamental (382.81)
5- 8-80	064508	Classification: Whether tabs on sleeve of a woman's housecoat are ornamental (382.00)
5- 8-80	064542	Classification: Steel storage bin (653.00, 870.40)
4- 9-80	064563	Classification: Whether label on jeans is ornamental
5- 5-80	064609	Classification: Torch lighter (688.45)
4- 9-80	064619	Classification: Knit ski socks (374.60, 735.06)
4- 4-80	064629	Classification: Air fresheners (772.15, 774.55)
4-17-80	064632	Classification: Air pump tire inflator (661.15, 711.78)
4-25-80	064735	Classification: Wood boomerangs (735.20)
5- 5-80	064796	Classification: Products used in concrete industry (657.25)

International Trade Commission Notices

Investigations by the U.S. International Trade Commission

DEPARTMENT OF THE TREASURY

The appended notices relating to investigations by the U.S. International Trade Commission are published for the information of Customs Officers and others concerned.

R. E. CHASEN,
Commissioner of Customs.

Notice of Receipt of Requests for Review of Certain Countervailing Duty Orders

Section 104(b) of the Trade Agreements Act of 1979 in pertinent part provides:

(b) OTHER COUNTERVAILING DUTY ORDERS.—

(1) REVIEW BY COMMISSION UPON REQUEST.—In the case of a countervailing duty order issued under section 303 of the Tariff Act of 1930 (19 U.S.C. 1303)—

(A) which is not a countervailing duty order to which subsection (a) applies,

(B) which applies to merchandise which is the product of a country under the agreement, and

(C) which is in effect on January 1, 1980, or which is issued pursuant to court order in an action brought under section 516(d) of that act before that date,

the Commission, upon the request of the government of such a country or of exporters accounting for a significant proportion of exports to the United States of merchandise which is covered by the order, submitted within 3 years after the effective date of title VII of the Tariff Act of 1930 shall make a determination under paragraph (2) of this subsection.

(2) DETERMINATION BY THE COMMISSION.—In a case described in paragraph (1) with respect to which it has received a request for re-

view, the Commission shall commence an investigation to determine whether—

(A) an industry in the United States—

(i) would be materially injured, or

(ii) would be threatened with material injury, or

(B) the establishment of an industry in the United States would be materially retarded,

by reason of imports of the merchandise covered by the countervailing duty if the order were to be revoked.

On March 14, 1980, the Commission published a notice of review of certain countervailing duty orders in the Federal Register, stating that it was the intention of the Commission to establish a schedule on or about April 30, 1980, for the conduct of investigations pursuant to section 104(b) encompassing requests for such investigations that had been received by March 28, 1980. The 19 requests for review which were received by the Commission are listed in attachment A. The Commission will publish notice of the institution of these investigations and will establish hearing dates after receipt from the Department of Commerce of updated information on the amount of the bounty or grant. The tentative dates established by the Department of Commerce for providing this information are also set forth in attachment A.

ATTACHMENT A

CVD orders for which the Commission has received requests for injury determinations

Product and country:	Tentative date for subsidy information
1. Float glass/Italy	Oct. 1, 1980
2. Refrigerators, freezers, and parts/Italy	Oct. 1, 1980
3. Ski lifts and parts/Italy	Oct. 1, 1980
4. Steel transmission towers/Italy	Oct. 1, 1980
5. Compressors and parts/Italy	Oct. 1, 1980
6. Certain steel products/Italy	Oct. 1, 1980
7. Steel welded wire mesh/Italy	Oct. 1, 1980
8. Die presses/Italy	Oct. 1, 1980
9. Screws/Italy	Oct. 1, 1980
10. Chains/Italy[1]	Oct. 1, 1980
11. Optic liquid level sensors/Canada	Jan. 8, 1981
12. X-radial steel-belted tires/Canada	Jan. 8, 1981
13. Barley/France	June 19, 1981
14. Molasses/France	June 19, 1981
15. Spirits/Ireland	June 20, 1981
16. Sugar/European Communities	July 21, 1981
17. Glass beads/Canada	Sept. 2, 1981
18. Spirits/United Kingdom	(2)
19. Textiles/Pakistan	(3)

[1] On Apr. 29, 1980, the National Association of Chain Manufacturers, the petitioner in the *Chains from Italy* investigation, sent a letter to the Commission requesting that they be allowed to withdraw the petition. The Commission has not yet acted on this request.

[2] The CVD order was revoked by a notice in the Federal Register of Feb. 15, 1977 (42 F.R. 9168), because the Treasury Department determined that bounties or grants were no longer being paid.

[3] This investigation was instituted by the Commission on May 2, 1980. The Commerce Department informed the Commission that the rates set forth in the Federal Register of July 13, 1979 (44 F.R. 40884), should be considered the most recent subsidy rates for this investigation.

By order of the Commission.
Issued: May 23, 1980.

KENNETH R. MASON,
Secretary.

(332–73)

Notice of Release for Public Comment of U.S. Administration Draft Comments on Draft Chapter of the Harmonized Commodity Description and Coding System

AGENCY: U.S. International Trade Commission.

ACTION: Release for public comment, pursuant to Commission investigation No. 332–73, under the authority of section 332(g) of the Tariff Act of 1930, as amended, of a draft of, and draft U.S. comments on, the following chapter of the Harmonized Commodity Description and Coding System.

CHAPTER 73—ARTICLES OF IRON OR STEEL

WRITTEN SUBMISSIONS: Parties wishing to submit written comments should do so by June 16, 1980.

COPIES OF DOCUMENTS: Copies of the draft chapter and draft U.S. comments thereon which are the subject of this notice are available for public inspection at the offices of the Commission, 701 E Street NW., Washington, D.C. 20436, or at 6 World Trade Center, New York, N.Y. 10048. The Commission will also send copies to interested parties upon request.

FOR FURTHER INFORMATION CONTACT: Eugene A. Rosengarden, Director, Office of Nomenclature, Valuation and Related Activities, U.S. International Trade Commission, 701 E Street NW., Washington, D.C. 20436; 202–523–0370.

SUPPLEMENTARY INFORMATION: The purpose of this notice is to obtain the comments and views of interested parties with respect to the above mentioned draft chapter of the Harmonized Commodity Description and Coding System, and of the draft U.S. comments thereon.

This notice is being issued pursuant to Commission investigation No. 332–73, instituted on January 31, 1975 (40 F.R. 6329), under section 332(g) of the Tariff Act of 1930. The investigation was initiated in accordance with section 608(c) of the Trade Act of 1974, which provides, in part, that the Commission shall institute an investigation which would provide the basis for—

> (2) full and immediate participation by the U.S. International Trade Commission in the U.S. contribution to technical work of the Harmonized Systems [sic] Committee under the Customs Cooperation Council to assure the recognition of the needs of the United States business community in the development of a Harmonized Code reflecting sound principles of commodity identification and specification and modern producing methods and trading practices * * * .

The Harmonized Commodity Description and Coding System (Harmonized Code) is being developed by the Customs Cooperation Council (CCC), an 80-member international organization with headquarters in Brussels, as an international commodity classification system which will be adaptable for modernized customs tariff nomenclature purposes and for recording, handling, and reporting of transactions in international trade. The Harmonized Code will be based on, and in many respects will be an extension of, the Customs Cooperation Council Nomenclature (CCCN), formerly known as the Brussels Tariff Nomenclature (BTN).

Currently, the technical team working under auspices of the CCC prepares drafts of the various chapters of the Harmonized Code for consideration by the Harmonized System Committee, which was established in order to develop the code. These drafts are forwarded to the members and observers of the Committee for their review and submission of written comments. The Committee meets three times a year to consider these drafts and the written comments and presentations of the various delegations. The review of a particular chapter or group of chapters may extend to more than one meeting.

In 1971, the Department of the Treasury established an Interagency Advisory Committee on Customs Cooperation Council Matters in order to provide a basis for interested Federal agencies to participate with respect to CCC matters. In order to establish and develop U.S. programs and policies with respect to the Harmonized Code, the interagency committee has instituted procedures which take into account the provisions of section 608(c) of the Trade Act of 1974, which call for the Commission to contribute to the U.S. technical input to the Harmonized System Committee. Under these procedures the Commission is preparing technical comments and proposals on the various chapters of the Harmonized Code for consideration by the

interagency committee in the determination of U.S. proposals with respect to the Harmonized Code. In making proposals, the Commission is seeking and taking into consideration the views of trade and industry and other interested parties and of interested Government agencies.

The draft U.S. comments on the chapter of the Harmonized Code released for public comment today relate specifically to the technical team draft of this chapter and should be read in conjunction therewith.

In its public notices of May 4, 1976 (41 F.R. 18716, May 6, 1976), August 9, 1976 (41 F.R. 34370, Aug. 13, 1976), December 20, 1976 (41 F.R. 55948, Dec. 23, 1976), September 1, 1977 (42 F.R. 44852, Sept. 7, 1977), February 7, 1978 (43 F.R. 5902, Feb. 10, 1978), October 16, 1978 (43 F.R. 48723, Oct. 19, 1978), February 14, 1979 (44 F.R. 10435, Feb. 20, 1979), May 16, 1979 (44 F.R. 29740, May 22, 1979), September 5, 1979 (44 F.R. 53112, Sept. 12, 1979), January 28, 1980 (45 F.R. 7648), and February 1, 1980 (45 F.R. 8168), the Commission identified those chapters which have been considered thus far by the Harmonized System Committee, and the chapters for which a technical team draft has been released.

By order of the Commission:

Issued: May 23, 1980.

KENNETH R. MASON,
Secretary.

731-TA-25 (Preliminary)

ANHYDROUS SODIUM METASILICATE FROM FRANCE

Notice of Institution of Preliminary Antidumping Investigation and Scheduling of Conference

Investigation instituted.—Following receipt of a petition on May 15, 1980, filed by PQ Corp., Valley Forge, Pa., the U.S. International Trade Commission on May 23, 1980, instituted a preliminary antidumping investigation under section 733(a) of the Tariff Act of 1930 (19 U.S.C. 1673b(a)) to determine whether there is a reasonable indication that an industry in the United States is materially injured, or is threatened with material injury, or the establishment of an industry in the United States is materially retarded, by reason of imports from France of anhydrous sodium metasilicate, provided for in item 421.34 of the Tariff Schedules of the United States, allegedly sold or likely to be sold at less than fair value. This investigation will be subject to the provisions of part 207 of the Commission's Rules of

Practice and Procedure (19 CFR 207, 44 F.R. 76457) and particularly, subpart B thereof, effective January 1, 1980.

Written submissions.—Any person may submit to the Commission on or before June 16, 1980, a written statement of information pertinent to the subject matter of the investigation. A signed original and 19 copies of such statements must be submitted.

Any business information which a submitter desires the Commission to treat as confidential shall be submitted separately and each sheet must be clearly marked at the top "Confidential business data." Confidential submissions must conform with the requirements of section 201.6 of the Commission's Rules of Practice and Procedure (19 CFR 201.6). All written submissions, except for confidential business data, will be available for public inspection.

Conference.—The Director of Operations of the Commission has scheduled a conference in connection with the investigation for 10 a.m., e.d.t., on June 13, 1980, at the U.S. International Trade Commission Building, 701 E Street NW., Washington, D.C. Parties wishing to participate in the conference should contact the supervisory investigator for the investigation, Mr. John MacHatton, 202-523-0439. It is anticipated that parties in support of the petition for antidumping duties and parties opposed to such petition will each be collectively allocated one hour within which to make an oral presentation at the conference. Further details concerning the conduct of the conference will be provided by the supervisory investigator.

Inspection of petition.—The petition filed in this case is available for public inspection at the Office of the Secretary, U.S. International Trade Commission, and at the New York City office of the U.S. International Trade Commission located at 6 World Trade Center.

Issued: May 23, 1980.

KENNETH R. MASON,
Secretary.

[TA-201-43]

MUSHROOMS

Cancellation of Prehearing Conference

Notice is hereby given that the prehearing conference scheduled for June 5, 1980, in this investigation is canceled.

By order of the Commission.

Issued: May 22, 1980.

KENNETH R. MASON,
Secretary.

(332-109)

Study of the Petrochemical Industries in the Countries of the Northern Portion of the Western Hemisphere

AGENCY: U.S. International Trade Commission.

ACTION: Notice is hereby given that the U.S. International Trade Commission, following receipt on May 6, 1980, of a request from the U.S. Trade Representative at the direction of the President, has instituted an investigation under section 332(g) of the Tariff Act of 1930 (19 U.S.C. 1332(g)) with respect to the petrochemical industries of the countries of the northern portion of the Western Hemisphere.

EFFECTIVE DATE: May 22, 1980.

FOR FURTHER INFORMATION CONTACT: Mr. John J. Gersic or Dr. A. Jonnard, Energy and Chemicals Division, Office of Industries, U.S. International Trade Commission, 701 E Street NW., Washington, D.C. 20436; 202-523-0451 or 202-523-0423, respectively.

SUPPLEMENTARY INFORMATION: Section 1104 of the Trade Agreements Act of 1979 (Public Law 96-39) directs the President to study the desirability of entering into trade agreements with countries in the northern portion of the Western Hemisphere to promote the economic growth of the United States and such countries and the mutual expansion of market opportunities and to report to the Committee on Ways and Means of the House of Representatives and the Committee on Finance of the Senate his findings and conclusions. The President's study will include, inter alia, an examination of the competitive opportunities and conditions of competition between such countries and the United States in petrochemicals. The Commission investigation will provide the information and facts for the President's deliberations on petrochemicals.

WRITTEN SUBMISSIONS: Since there will be no public hearing scheduled for this study, written submissions from interested parties are invited concerning any phase of the study. Commercial or financial information which a party desires the Commission to treat as confidential must be submitted on separate sheets of paper, each clearly marked "Confidential Business Information" at the top. All submissions requesting confidential treatment must conform with the requirements of section 201.6 of the Commission's Rules of Practice and Procedure (19 CFR 201.6). All written submissions, except for business information, will be made available for inspection by interested persons. To be insured of consideration by the Commission

in this study, written statements should be submitted at the earliest practicable date, but no later than October 24, 1980. All submissions should be addressed to the Secretary at the Commission's office in Washington, D.C.

COMPLETION DATE: The Commission plans to complete its study and report its findings to the U.S. Trade Representative not later than December 30, 1980.

Issued: May 27, 1980.

KENNETH R. MASON,
Secretary.

In the Matter of CATHODE SPUTTER COATED GLASS TRANSPARENCIES	Investigation No. 337–TA–79

Remand of Certification of Motion to Terminate

On May 7, 1980, the presiding officer in the above-captioned case issued the above order, certifying a motion and consent order agreements to the Commission. The Commission is remanding that order to the presiding officer in order to obtain a recommendation regarding whether the consent order agreements should be accepted.

Proposed section 337 consent order rules provide, in proposed section 210.51(a)(2) that: "The licensing or other agreement and any agreements supplemental thereto, and affidavit shall be certified by the presiding officer to the Commission with his recommendation." Although the proposed consent order rules are not in effect, the Commission believes that having the benefit of a recommendation by the presiding officer is beneficial and in conformance with sound administrative practice. Although rule 210.14 of the Commission's Rules of Practice and Procedure reserve certain public interest factors to the Commission for initial consideration, these factors are not exhaustive of all public interest and equitable considerations that the Commission takes into account when deciding whether to accept an agreement. The practice of obtaining a recommendation from the presiding officer has been followed with regard to settlement agreements. See Certain Resistor Chips, investigation No. 337–TA–63/65 (recommended determination of February 22, 1980).

The Commission therefore requests that the presiding officer make recommendations regarding the consent order here in issue.

By order of the Commission.

Issued: May 23, 1980.

KENNETH R. MASON,
Secretary.

In the Matter of CERTAIN ANAEROBIC IMPREGNATING COMPOSITIONS AND COMPONENTS THEREFOR	Investigation No. 337-TA-71

Commission Determination and Order

The U.S. International Trade Commission conducted an investigation under the authority of section 337 of the Tariff Act of 1930 (19 U.S.C. 1337) (section 337) of unfair methods of competition and unfair acts in the unauthorized importation into the United States of certain components for anaerobic impregnating compositions allegedly covered by claims 1, 4, and 12 of U.S. letters patent 4,069,378, or in their sale by the owner, importer, consignee, or agent of either, the effect or tendency of which is to destroy or substantially injure an industry, efficiently and economically operated, in the United States. On May 15, 1980, the Commission determined that there is no violation of section 337 with respect to investigation No. 337-TA-71. This determination and order provides for the final disposition of the subject investigation by the Commission.

Determination

Having reviewed the record in this matter including (1) the submissions filed by the parties, (2) the transcripts of hearings held by the administrative law judge, (3) the recommended determination of the administrative law judge, and (4) complainant's exceptions to the recommended determination and appeals from interlocutory orders of the administrative law judge, the Commission, on May 15, 1980, determined that, with respect to investigation No. 337-TA-71, there is no violation of section 337 of the Tariff Act of 1930, as amended.

Order

Accordingly, it is hereby ordered—

1. That complainant's motion to amend the complaint to add allegations on infringement of U.S. letters patent 4,165,400 (motion docket No. 71-30) is denied as moot;

2. That complainant's motion to suspend investigation No. 337-TA-71 pending a final determination by the U.S. Patent and Trademark Office on a reissue application filed by complainant relating to U.S. letters patent 4,079,378 (motion docket No. 71-33) is denied as moot;

3. That investigation No. 337-TA-71 is terminated as to all issues and all parties based on the Commission's determination that there is no

violation of section 337 of the Tariff Act of 1930, as amended, because claims 1, 4, and 12 of U.S. letters patent 4,069,378 are invalid; and

4. That this determination and order be published in the Federal Register and that the determination and order, along with the Commission opinion in support thereof, be served upon each party of record in this investigation and upon the U.S. Department of Health, Education, and Welfare, the U.S. Department of Justice, and the Federal Trade Commission.

By order of the Commission.

Issued: May 27, 1980.

KENNETH R. MASON,
Secretary.

Index

U.S. Customs Service

	T.D. No.
Treasury decisions:	
Bonds: Carrier (Customs form 3587)	80-147
Bermuda added to list of nations—section 4.93, Customs Regulations	80-152
Foreign currencies:	
Daily certified rates; May 12-16, 1980	80-148
Daily certified rates; May 19-23, 1980	80-155
Rates which varied from quarterly rate; week of May 12-16, 1980	80-149
Rates which varied from quarterly rate; week of May 19-23, 1980	80-156
Drawback—standards used for orange juice products	80-153
Imported metal articles, remanufacture by melting, sections 54.5 and 54.6, Customs Regulations, amended	80-151
Tuna fish—tariff rate quota	80-150
Synopses of drawback decisions	80-154
Heat exchangers, plate	80-154-A
Piece goods, bleached, dyed, and/or printed	80-154-B
Storage systems, extended core	80-154-C
Engines, diesel internal combustion	80-154-D
Panels, vinyl laminated hardwood	80-154-E
Computer systems and potions	80-154-F
Cellophane film	80-154-G
Wheel loaders, motor graders, crawler tractors, etc	80-154-H
Panels, polyester fiberglass	80-154-I
Clothing, men's	80-154-J
Beds, hospital	80-154-K
Lasers, fusion research	80-154-L
Brake drums, finished	80-154-M
Generator sets	80-154-N
Skis, snow	80-154-O
Dyestuffs	80-154-P
Carpet, automotive	80-154-Q
Cans	80-154-R
Seats, truck and bus	80-154-S
Loaders and self-propelled windrowers	80-154-T
Piece goods, dyed	80-154-U
Watch cases, bezel/crystal assemblies etc	80-154-V
Refrigeration systems	80-154-W
Piece goods, dyed lace	80-154-X
Bar steel, deformed hollow	80-154-Y
Magnesium sulfate process stream	80-154-Z

Customs Court

Amendment of judgment; seats for rapid transit cars, C.D. 4857
American manufacturer's action; motion for rehearing granted in part, C.R.D. 80-6
Antidumping; tantalum electrolytic fixed capacitors, C.R.D. 80-6
Appeal to U.S. Court of Customs and Patent Appeals (p.—):
    Appeal 80-29—American manufacturer's action; nonpowered hand tools; negative injury determination; Antidumping Act; summary judgment
Bipolar diaphragm electrolyzers and parts, C.R.D. 80-5
Burden of proof; jurisdiction of court, C.R.D. 80-5
Clerical:
    Error:
        Mistake of fact, C.R.D. 80-5
        Mistake of fact or other inadvertence, C.R.D. 80-5
    Mistake; motion to amend judgment, C.D. 4857
Construction:
    Antidumping Act of 1921, as amended, C.R.D. 80-6
    Federal Rules of Civil Procedure:
        Rule 60(a), C.D. 4857
        Rule 60(b), C.D. 4857
    Rules of U.S. Customs Court:
        Rule 4.7(a)(5), C.R.D. 80-5
        Rule 4.12, C.R.D. 80-6
        Rule 12.1, C.R.D. 80-6
        Rule 12.1(a), C.D. 4857
        Rule 12.2, C.D. 4857
        Rule 12.2(a), C.D. 4857
        Rule 12.2(b), C.D. 4857
    Tariff Schedules of the United States:
        Item 690.40, C.D. 4857
        Item 727.55, C.D. 4857
    U.S. Code:
        Title 19:
            Secs. 160 *et seq.*, C.R.D. 80-6
            Sec. 1514(a)(7), C.R.D. 80-5
            Sec. 1516(c), C.R.D. 80-6
            Sec. 1516(g), C.R.D. 80-6
            Sec. 1520(c)(1), C.R.D. 80-5
        Title 28:
            Sec. 1582(a), C.R.D. 80-5
            Sec. 2639, C.D. 4857
Dismiss, motion to; memorandum opinion, C.R.D. 80-5
Erroneous import statistics, reliance on; negative injury determination, C.R.D. 80-6
Furniture, C.D. 4857
Judgment:
    Amendment of, C.D. 4857
    Motion to amend, C.D. 4857
Jurisdiction:
    Lack of; motion to dismiss, C.R.D. 80-5
    Of court; burden of proof, C.R.D. 80-5

Lack of jurisdiction, C.R.D. 80-5
Less than fair value; negative injury determination, C.R.D. 80-6
Memorandum opinion; dismiss, motion to, C.R.D. 80-5
Mistake of fact; clerical error, C.R.D. 80-5
Motion:
    For rehearing granted in part; American manufacturer's action, C.R.D. 80-6
    To amend judgment; clerical mistake, C.D. 4857
    To dismiss; jurisdiction, lack of, C.R.D. 80-5
Negative injury determination:
    Erroneous import statistics, reliance on, C.R.D. 80-6
    Less than fair value, C.R.D. 80-6
    United States International Trade Commission, C.R.D. 80-6
Parts of rail vehicles, C.D. 4857
Rail vehicles, parts of, C.D. 4857
Rehearing, motion for, C.R.D. 80-6
Reliquidation, requests for; timeliness, C.R.D. 80-5
Seats for rapid transit cars; amendment of judgment, C.D. 4857
Statistics, erroneous import, C.R.D. 80-6
Tantalum electrolytic fixed capacitors; antidumping, C.R.D. 80-6
Timeliness; reliquidation, requests for, C.R.D. 80-5
United States International Trade Commission; negative injury determination, C.R.D. 80-6
Words and phrases:
    Clerical:
        Error, C.D. 4857
        Mistake, C.D. 4857

U.S. GOVERNMENT PRINTING OFFICE : 1980 O - 320-980 : QL 3

JUN 27 1980 Item 950-D T1.11/3:14/26
contin

Customs Bulletin

Regulations, Rulings, Decisions, and Notices concerning Customs and related matters

and Decisions

of the United States Court of Customs and Patent Appeals and the United States Customs Court

9247

Vol. 14 JUNE 24, 1980 No. 26

This issue contains

T.D. 80–158 and 80–159
C.D. 4858 and 4859
Protest abstracts P80/73 through P80/71
Reap. abstracts R80/163 through R80/169
International Trade Commission Notices

THE DEPARTMENT OF THE TREASURY
U.S. Customs Service

NOTICE

The abstracts, rulings, and notices which are issued weekly by the U.S. Customs Service are subject to correction for typographical or other printing errors. Users may notify the U.S. Customs Service, Logistics Management Division, Washington, D.C. 20229, of any such errors in order that corrections may be made before the bound volumes are published.

For sale by the Superintendent of Documents, U.S. Government Printing Office, Washington, D.C. 20402. Price: $2.25 (single copy domestic); $2.85 (single copy foreign). Subscription price: $85.00 a year domestic; $106.25 a year foreign.

U.S. Customs Service

Treasury Decisions

(T.D. 80-158)

Foreign Currencies—Daily Rates for Countries not on Quarterly List

Rates of exchange based on rates certified to the Secretary of the Treasury by the Federal Reserve Bank of New York for the Brazil cruzeiro, People's Republic of China yuan, Hong Hong dollar, Iran rial, Philippines peso, Singapore dollar, Thailand baht (tical), and Venezuela bolivar

The Federal Reserve Bank of New York, pursuant to section 522(c), Tariff Act of 1930, as amended (31 U.S.C. 372 (c)), has certified buying rates for the dates and foreign currencies shown below. The rates of exchange, based on these buying rates, are published for the information and use of Customs officers and others concerned pursuant to part 159, subpart C, Customs Regulations (19 CFR 159, subpart C).

Brazil cruzeiro:	
May 27–28, 1980	$0.0199
May 29–30, 1980	.0197
People's Republic of China yuan:	
May 27–29, 1980	$0.677231
May 30, 1980	.674536
Hong Kong dollar:	
May 27, 1980	$0.203625
May 28, 1980	.203645
May 29, 1980	.203625
May 30, 1980	.204290
Iran rial:	
May 27–30, 1980	Not available
Philippines peso:	
May 27–30, 1980	$0.1345

Singapore dollar:	
May 27, 1980	$0.466962
May 28, 1980	.467399
May 29, 1980	.467836
May 30, 1980	.468494
Thailand baht (tical):	
May 27–30, 1980	$0.0490
Venezuela bolivar:	
May 27–30, 1980	$0.2329

(LIQ-3-TRODE)

Dated: June 9, 1980.

MILES J. FLYNN
(For Chester R. Krayton,
Director, Duty Assessment Division).

(T.D. 80–159)

Foreign Currencies—Variances From Quarterly Rate

Rates of exchange based upon rates certified to the Secretary of the Treasury by the Federal Reserve Bank of New York

The following rates of exchange are based upon rates certified to the Secretary of the Treasury by the Federal Reserve Bank of New York, pursuant to section 522(c), Tariff Act of 1930, as amended (31 U.S.C. 372(c)), and reflect variances of 5 per centum or more from the quarterly rate published in T.D. 80–103 for the following countries. Therefore, as to entries covering merchandise exported on the dates listed, whenever it is necessary for Customs purposes to convert such currency into currency of the United States, conversion shall be at the following rates:

Australia dollar:	
May 27, 1980	$1.1485
May 28–29, 1980	1.1460
May 30, 1980	1.1428
Austria schilling:	
May 27, 1980	$0.079239
May 28, 1980	.078989
May 29, 1980	.078802
May 30, 1980	.078493
Belgium franc:	
May 27, 1980	$0.035361
May 28, 1980	.035239

May 29, 1980	$0.035162
May 30, 1980	.035199
Denmark krone:	
May 27, 1980	$0.181818
May 28, 1980	.181357
May 29, 1980	.180750
May 30, 1980	.180930
Finland markka:	
May 27, 1980	$0.274085
May 28, 1980	.273973
May 29, 1980	.273224
May 30, 1980	.272480
France franc:	
May 27, 1980	$0.243250
May 28, 1980	.242571
May 29, 1980	.241955
May 30, 1980	.241779
Germany deutsche mark:	
May 27, 1980	$0.567408
May 28, 1980	.564239
May 29–30, 1980	.562272
India rupee:	
May 27, 1980	$0.1297
May 28, 1980	.1290
Ireland pound:	
May 27, 1980	$2.1100
May 28, 1980	2.0955
May 29, 1980	2.0930
May 30, 1980	2.0890
Italy lira:	
May 27, 1980	$0.001204
May 28, 1980	.001203
May 29, 1980	.001197
May 30, 1980	.001192
Japan yen:	
May 27, 1980	$0.004562
May 28, 1980	.004474
May 29, 1980	.004468
May 30, 1980	.004484
Malaysia dollar:	
May 27, 1980	$0.462107
May 28, 1980	.463392
May 29, 1980	.462000
May 30, 1980	.461894

Netherlands guilder:	
May 27, 1980	$0.516396
May 28, 1980	.513347
May 29, 1980	.512033
May 30, 1980	.511771
New Zealand dollar:	
May 27, 1980	$0.9927
May 28–29, 1980	.9870
May 30, 1980	.9830
Norway krone:	
May 27, 1980	$0.206441
May 28, 1980	.206186
May 29, 1980	.205761
May 30, 1980	.205592
Portugal escudo:	
May 27, 1980	$0.020471
May 28, 1980	.020429
May 29, 1980	.020437
May 30, 1980	.020346
Spain peseta:	
May 27, 1980	$0.014308
May 28–29, 1980	.014280
Sweden krona:	
May 27, 1980	$0.240385
May 28, 1980	.239521
May 29, 1980	.239063
May 30, 1980	.238663
Switzerland franc:	
May 27, 1980	$0.610687
May 28, 1980	.607903
May 29, 1980	.604961
May 30, 1980	.601685
United Kingdom pound:	
May 27, 1980	$2.3700
May 28, 1980	2.3590
May 29, 1980	2.3460
May 30, 1980	2.3425

(LIQ-3-TRODE)

Dated: June 9, 1980.

MYLES J. FLYNN
(For Chester R. Krayton,
Duty Assessment Division).

Decisions of the United States Customs Court

United States Customs Court

One Federal Plaza

New York, N.Y. 10007

Chief Judge

Edward D. Re

Judges

Paul P. Rao
Morgan Ford
Scovel Richardson
Frederick Landis
James L. Watson
Herbert N. Maletz
Bernard Newman
Nils A. Boe

Senior Judge

Samuel M. Rosenstein

Clerk

Joseph E. Lombardi

Customs Decisions

(C.D. 4858)

A. N. DERINGER, INC., PLAINTIFF *v.* UNITED STATES, DEFENDANT

Biscuits, Cookies and Candy—Admission Refused

Court No. 73-8-02142

[Judgment for defendant.]

(Decided on remand [C.A.D. 1220], May 28, 1980)

Barnes, Richardson & Colburn (*Joseph Schwartz, Edward F. Christopher* and *Michael A. Johnson* of counsel) for the plaintiff.

Alice Daniel, Assistant Attorney General (*Mark K. Neville, Jr., Laura D. Millman* and *Saul Davis,* trial attorneys), for the defendant.

FORD, Judge: This action is before me pursuant to *United States* v. *A. N. Deringer, Inc.*, 66 CCPA ——, C.A.D. 1220, 593 F. 2d 1015 (1979), wherein the court vacated the judgment of this court in *A. N. Deringer, Inc.* v. *United States*, 80 Cust. Ct. 17, C.D. 4731, 447 F. Supp. 453 (1978) and remanded the action for consideration of appellee's claim for refund of duties. In its decision of remand the court, in a footnote, made the following statement:

> We do not reach the merits of appellee's claim since such was not considered by the Customs Court. We note that the mere fact that appellee exported the goods does not, in and of itself, entitle it to a refund of the estimated duties deposited upon entry of the goods into this country. See 19 U.S.C. 1558.

Plaintiff has proceeded in this remand by the filing of a motion for summary judgment. Defendant has filed a crossmotion for summary judgment.

The statutory provision, 19 U.S.C. 1558, referred to above, provides as follows:

> § 1558. *No remission or refund after release of merchandise*
>
> (a) No remission, abatement, refund, or drawback of estimated or liquidated duty shall be allowed because of the exportation or destruction of any merchandise after its release from the custody of the Government, except in the following cases:
>
> (1) When articles are exported with respect to which a drawback of duties is expressly provided for by law;
>
> (2) When prohibited articles have been regularly entered in good faith and are subsequently exported or destroyed pursuant to a law of the United States and under such regulations as the Secretary of the Treasury may prescribe; and
>
> (3) When articles entered under bond, under any provision of law, are destroyed within the bonded period as provided for in section 1557 of this title, or are destroyed within the bonded period by death, accidental fire, or other casualty, and proof of such destruction is furnished which shall be satisfactory to the Secretary of the Treasury, in which case any accrued duties shall be remitted or refunded and any condition in the bond that the articles shall be exported shall be deemed to have been satisfied.
>
> (b) When articles are exported or destroyed under Customs supervision after once having been released from Customs custody, as provided for in subsection (c) of section 1304 of this title, such exportation or destruction shall not exempt such articles from the payment of duties other than the marking duty provided for in such subsection (c). (June 17, 1930, ch. 497, title IV, sec. 558, 46 Stat. 744; June 25, 1938, ch. 679, sec. 24, 52 Stat. 1088.)

It is clear that the provision above permits no refund of estimated or liquidated duties on exported merchandise after release from Customs custody, unless it falls within one of the three exceptions set forth supra. Obviously, exceptions 1 and 3 are not applicable.

The issue thus presented is whether the requirements of the Food and Drug Administration place the importations in the category of prohibited merchandise. If so, the court must consider whether the merchandise was entered in good faith.

It is apparent from form FD–777, issued by the Food and Drug Administration, entitled "Notice of Detention and Hearing," that the merchandise may be in violation of the law and "(t)he merchandise should continue to be held intact pending final decision as to whether it shall be admitted or refused admission." The notice further states the party has an opportunity to appear within 7 days at which time

> (t) he testimony which you may present may include evidence as to the manner in which the article can be brought into compliance with the act or removed from its scope by rendering it not a food, drug, device, or cosmetic as defined by the act.

The subsequent notice on form FD–772 is entitle "Notice of Refusal of Admission" and concludes with the following paragraph:

> You are hereby notified that admission of above-described merchandise is refused. This merchandise must be exported under Customs' supervision within 90 days from the date of this notice or within such additional time as the District Director of Customs specifies. Failure to do so may result in destruction of the merchandise as authorized by statute.

Based upon the stipulation of facts, paragraphs 4, 5, and 6 as previously submitted to the court, the parties agreed as follows:

> 4. Plaintiff, despite the notices of detention and hearing sent because of the nonconforming labeling, failed to communicate in any way with the Food and Drug Administration, although the notices gave plaintiff the privilege of appearing for a hearing, and failed to relabel the merchandise even though it was implicit in the law and regulations that plaintiff had the right to relabel the merchandise and again seek entry thereof.
>
> 5. The merchandise involved in this case, if relabeled to correct the deficiencies noted in paragraph 1, would not have been in violation of the Federal Food, Drug and Cosmetic Act and regulations enacted pursuant to the Fair Packaging and Labeling Act.
>
> 6. The merchandise involved in this case, if so relabeled, would not have had to have been exported, and could have been released into the commerce of the United States.

Plaintiff in its present statement of facts filed pursuant to rule 8.2(b) of the rules of this court, paragraphs 16, 17, 19, 20, and 21, has in effect agreed with the original stipulation supra.

Plaintiff contends the refusal of entry places the importation in the prohibited merchandise category and, since it had entered the merchandise in good faith, it was entitled to a refund of duty as the merchandise was exported under Customs supervision. Plaintiff argues

Kreutz & Co. v. *United States*, 20 CCPA 109, T.D. 45752 (1932) and *A. M. & J. Solari, Ltd.* v. *United States*, 6 Cust. Ct. 373, C.D. 499 (1941) support its position that merchandise refused admission is prohibited merchandise.

Neither *Kreutz* nor *Solari* are dispositive of the issues in the instant case. These cases did not involve the interpretation of section 1558 supra or its predecessor. *Kreutz* was tried under the Tariff Act of 1922 which contained the predecessor provision of section 1558, but said provision was not in issue since section 2 of the Food and Drug Act, in effect at that time, provided that adulterated or misbranded articles of food and drugs are prohibited from being introduced into any State, territory or the District of Columbia from a foreign country. The court found, based upon the foregoing section and section 11 of the Food and Drug Act then in effect, that the merchandise was prohibited and the importer was entitled to a refund.

In *Solari* which was tried under the Tariff Act of 1930, but prior to the 1938 amendment of section 1558 involved herein, is likewise distinguishable. The merchandise therein was whisky, which Customs found was misbranded as to the age of the liquor. The term "misbranded" was defined in the Food and Drug Act then in effect and required the merchandise be refused admission. The court, based upon the record, held the merchandise was seized and destroyed without warrant of law. This being so, the court held the importer was entitled to a refund.

The present section 1558 was amended by the Customs administrative Act of 1938 and, for the first time, provided for exceptions to the general rule that no remission, abatement, refund, or drawback of estimated or liquidated duties shall be allowed because of exportation or destruction after release from Customs custody. The provision relied upon by plaintiff, section 1558(a)(2), provides for refund for merchandise which was released from Customs custody and exported under Customs supervision when entered in good faith. Neither *Kreutz* nor *Solari* involved this question.

In any event, the court observes that the language "Refusal of Admission" used in the notice, form FD–772, is not tantamount to prohibited. The merchandise was conditionally refused admission. Had the party corrected the matters complained of by the Food and Drug Administration, it would have been permitted entry. Merchandise, such as adulterated food or food unfit for human consumption, narcotics, or immoral articles, to name a few, are prohibited. The latter term is one which cannot be corrected.

In view of the foregoing, it is unnecessary to consider the question of good faith since the merchandise was not prohibited within the statutory language. Accordingly, defendant's cross-motion for sum-

mary judgment is granted, plaintiff's motion is denied, and the action is dismissed.

Judgment will be entered accordingly.

(C.D. 4859)

PHILIPP OVERSEAS, INC., PLAINTIFF *v.* UNITED STATES, DEFENDANT

Stainless Steel Angles

Court No. 78-7-01253

STATUTORY CONSTRUCTION—CONGRESSIONAL INTENT DETERMINED BY REFERENCE TO RELEVANT HEADNOTES

In construing the tariff schedules "all parts of (the) statute must be read together and all relevant headnotes are to be considered in determining congressional intent." *Lyons Export & Import, Inc.* v. *United States*, 59 CCPA 142, 146, C.A.D. 1056, 461 F. 2d 830 (1972).

SAME—HEADNOTE 1, PART 2 OF SCHEDULE 6, TSUS

The language in headnote 1, part 2 of schedule 6, TSUS, "[u]nless the context requires otherwise" does not preclude the application of that headnote to the products encompassed by item 609.82, TSUS, by virtue of the language in the superior heading to that item, "Not drilled, not punched, and not otherwise advanced."

"ADVANCED"—TERM DOES NOT EMBRACE STEPS IN CREATION OF ARTICLE OR INCIDENTAL TO MAKING ROLLED SHAPE MERCHANTABLE

No step in the creation of an article is at the same time an advancement of the article. *United States* v. *Baron Tube Co. et al.*, 47 CCPA 69, C.A.D. 730 (1960); *Commercial Shearing & Stamping Company* v. *United States* (*Guadalupe Industrial Supply Co., Inc., Party-in-Interest*), 65 Cust. Ct. 91, C.D. 4060, 317 F. Supp 750 (1970), *aff'd*, 59 CCPA 203, C.A.D. 1067, 464 F. 2d 1048 (1972). Moreover, "manipulations after rolling, incident to making the rolled shape merchantable and fit for shipment, do not constitute 'advance' within the congressional intent." *American Mannex Corp.* v. *United States*, 56 Cust. Ct. 31, 36, C.D. 2608 (1966). *Accord, E. Dillingham, Inc., et al.* v. *United States*, 61 Cust. Ct. 33, C.D. 3522 (1968). Since the imported angles were composed of stainless steel intended for corrosion resistant service, and commercially acceptable angles of the type imported could not be produced without annealing and pickling, those processes were steps in the creation of commercially acceptable angles, and therefore (under the rationale of the above-cited cases) were not advancements within the purview of the statute. *Karl Schroff & Associates, Inc.* v. *United States*, 67 Cust. Ct. 4, C.D. 4244 (1971); *Edward W. Daniel Company* v. *United States*, 67 Cust. Ct. 132, C.D. 4264 (1971); and *F. W. Myers & Co., Inc.* v. *United States*, 45 Cust. Ct. 124, C.D. 2210 (1960), distinguished.

EJUSDEM GENERIS

Under the doctrine of ejusdem generis "where particular words of description are followed by general terms, the latter refer only to things of a like class with those particularly described." *United States* v. *C. J. Tower & Sons*, 44 CCPA 1, C.A.D. 626 (1956).

SAME—ANNEALING AND PICKLING NOT EJUSDEM GENERIS WITH DRILLED AND PUNCHED—SUPERIOR HEADING TO ITEM 609.82, TSUS

Applying the doctrine of ejusdem generis to the language "not drilled, and not punched, and not otherwise advanced" in the superior heading to item 609.82, TSUS, requires that the words "otherwise advanced" be interpreted as encompassing only those mechanical operations (like drilling and punching) which are performed after the essential characteristics of the angles are attained. Thus, annealing and pickling, which are respectively thermal and chemical operations employed in the creation of commercially acceptable stainless steel angles, are not ejusdem generis with drilling and punching. *Cf. Border Brokerage Company, Inc.* v. *United States*, 60 Cust. Ct. 487, C.D. 3437 (1968).

[Judgment for plaintiff.]

(Decided May 29, 1980)

Barnes, Richardson & Colburn, Esqs. (*E. Thomas Honey* and *John J. Galvin*, Esqs., of counsel) for the plaintiff.

Alice Daniel, Assistant Attorney General, *Joseph I. Liebman*, Attorney in Charge, Field Office for Customs Litigation, and *John J. Mahon*, trial attorney, Esqs., for the defendant.

NEWMAN, Judge:

INTRODUCTION

This action involves the proper tariff classification for certain stainless steel angles imported from Norway and entered at the port of New York in October and November 1977.

The merchandise was assessed with duty at the rate of 8.5 per centum ad valorem under item 609.86 of the Tariff Schedules of the United States (TSUS), as modified by T.D. 68–9, plus additional duties on the chromium and molybdenum content under items 607.01 and 607.02 respectively, pursuant to headnote 4, subpart B, part 2, schedule 6. Plaintiff claims that the angles are properly dutiable at the rate of 0.1 cent per pound plus 2 per centum ad valorem under item 609.82, TSUS, as modified by T.D. 68–9, plus the additional duties on the chromium and molybdenum content, which are not contested.

STATUTE INVOLVED

The pertinent statutory provisions in TSUS schedule 6, part 2, read:

> Angles, shapes, and sections, all the foregoing, of iron or steel, hot rolled, forged,

	extruded, or drawn, or cold formed or cold finished, whether or not drilled, punched, or otherwise advanced; sheet piling of iron or steel:	
	Angles, shapes, and sections:	
	Hot rolled; or, cold formed and weighing over 0.29 pound per linear foot:	
	Not drilled, not punched, and not otherwise advanced:	
	* * * * * * *	
[Claimed] 609.82	Alloy iron or steel----	0.1 cent per lb.+2% ad val.+additional duties (see headnote 4)
	Drilled, punched, or otherwise advanced:	
	* * * * * * *	
[Classified] 609.86	Alloy iron or steel----	8.5% ad val.+ additional duties (see headnote 4)

THE FACTS [1]

The imported articles are stainless steel angles [2] of various sizes. These angles are produced by heating a steel billet, and then transferring it from the furnace to a hot rolling mill where it is rolled into the shape of an angle. After coming off the rolling mill, the rolled stainless shape is cooled and cut to length, after which it is annealed by reheating to a temperature of at least 1,000° C and cooled by quenching in water. To be commercially acceptable, the angles must then be straightened, since they are wavy after the rolling process (R. 17, 51, 84). After straightening, the angles are then pickled by dipping them into an acid solution to remove the crust or scale that formed because of the annealing process and to make the metal resistant to corrosion (R. 14–17, 31, 33–34, 50–51, plaintiff's exhibit 3).

It further appears that prior to annealing, the stainless steel shape

[1] The record consists of the oral testimony of two witnesses for plaintiff and one witness for defendant. Plaintiff's witnesses were: Edwin J. Helfand, vice president of Philipp Overseas, Inc., and James A. Kearney, a metallurgical engineer employed as a consultant to the Pittsburgh Testing Laboratory. Defendant's witness was Raymond Thomas, a metallurgist employed by United States Steel Corp. Additionally, plaintiff introduced in evidence a sample and 3 documentary exhibits; defendant submitted one documentary exhibit.

[2] This fact is admitted by defendant in its answer to para. 4 of the complaint.

320-981 O 80 - 2 : QL 3

(referred to as hot rolled as rolled (R. 16, 30)) has scale or rust, with no predictable hardness, tensile strength, yield point, elongation, ductility, or response to corroding action (R. 16, 50). Additionally, prior to annealing, the chromium has not properly bonded to the iron to produce a noncorrosive surface, and the annealing process is required to redistribute the chromium and the carbon to produce a proper union of the chromium with the iron in the metal (R. 14, 49–50). In short, the purpose of the annealing process is to create a uniform and predictable range of physical characteristics in the metal as well as create a corrosion resistant product (R. 14, 35, 50–51, 77);[3] the purpose of the pickling process is to remove the annealing scale so as to give the stainless steel a uniform layer of chromium oxide on its skin and make it corrosion resistant (R. 52, 80, 82).

The record also establishes that the annealing and pickling processes are an intergal and vital part of the manufacture of the imported stainless steel angles; and that prior to those processes, the product, of the rolling mill are semifinished, lacking in predictable properties and not commercially acceptable as stainless steel angles (R. 16, 17, 21, 37, 52, 53–54, 78–79, 81).[4]

Finally, the record shows that while drilling and punching are mechanical operations, annealing is a thermal process, and pickling is a chemical process (R. 57). Other forms of mechanical operations performed on angles are bending and forming (R. 18), and mitering corners for knitting angles together with plates to make welded assemblies (R. 57).

OPINION

1

In construing the Tariff Schedules "all parts of (the) statute must be read together and all relevant headnotes are to be considered in determining Congressional intent". *Lyons Export & Import, Inc.* v. *United States*, 59 CCPA 142, 146, C.A.D. 1056, 461 F. 2d 830 (1972). Here, the centerpiece of the dispute is headnote 1, part 2 of schedule 6, which reads:

> * * * Unless the context requires otherwise , the provisions of this part apply to the products described by whatever process made (i.e., whether rolled, forged, drawn, extruded, cast or sintered) and whether or not such products have been subjected to treatments to improve the properties or appearance of the metals or to protect them against rusting, corrosion or other deterioration.

[3] As put by defendant's witness Thomas, "the intent of the heat treatment (annealing) is to either alter the microstructure or the distribution of the micro-constituent material" (R. 95).

[4] Although ASTM (American Society for Testing Materials) specifications do not specifically mention pickling, plaintiff's witness Kearney testified that "industry practice uniformly provides for a pickled finish as a product finished in the annealed condition" and that "pickling is the normal hot rolled, annealed product finish" (R. 52–53, 81).

> These treatments include *annealing*, tempering, case-hardening and similar heat treatments or nitriding; descaling, *pickling*, scraping, scalping and other processes to remove oxidation scale and crust; * * *. [Italic added.]

It is evident from the foregoing headnote, that the products classifiable under item 609.82, TSUS, may be subjected to annealing and pickling " (u)nless the context (of item 609.82) requires otherwise."

Defendant maintains that the words in the superior heading to item 609.82, "not otherwise advanced" fall within the exclusionary language in headnote 1, part 2, schedule 6, "(u)nless the context requires otherwise"; that the imports were otherwise advanced by reason of having been subjected to annealing and pickling; that therefore the merchandise is excluded from item 609.82 and is properly dutiable under item 609.86.

Plaintiff, on the other hand, urges that notwithstanding annealing and pickling, the merchandise was not otherwise advanced within the purview of the superior heading to item 609.82, TSUS; and hence headnote 1, supra, is applicable to the merchandise classifiable under item 609.82.

There is no dispute that the imports were neither drilled nor punched, and defendant does not claim that the straightening operation constituted an advancement of the angles. Consequently, the issue is narrowed to determining whether the annealing and pickling operations (which are expressly allowed by headnote 1, supra, unless the context requires otherwise) exclude the merchandise from classification under item 609.82 by reason of the language "not otherwise advanced" in the superior heading.

2

Plaintiff argues that the annealing and pickling processes were essential, integral and continuous operations in the production of the stainless steel angles, and that without such processes commercially acceptable stainless steel angles could not have been produced. Accordingly, plaintiff insists that annealing and pickling did not constitute advancements within the purview of the statute.

It is well settled that no step in the creation of an article is at the same time an advancement of the article. *United States* v. *Baron Tube Co. et al.*, 47 CCPA 69, 71, C.A.D. 730 (1960); *Commercial Shearing & Stamping Company* v. *United States*, (*Guadalupe Industrial Supply Company, Inc., Party-in-Interest*), 65 Cust. Ct. 91, 105, C.D. 4060, 317 F. Supp. 750 (1970), *aff'd*, 59 CCPA 203, C.A.D. 1067, 464 F. 2d 1048 (1972). Moreover, "manipulations after rolling, incident to making the rolled shape merchantable and fit for shipment, do not constitute 'advance' within the congressional intent." *American*

Mannex Corp. v. *United States*, 56 Cust. Ct. 31, 36, C.D. 2608 (1966). *Accord, E. Dillingham, Inc., et al.* v. *United States*, 61 Cust. Ct. 33, C.D. 3522 (1968).

Since the imported angles were composed of stainless steel intended for corrosion resistant service, commercially acceptable angles of the type imported could not be produced without annealing and pickling. Plainly, then, the hot rolled as rolled angles, which lacked predictable physical qualities and corrosion resistance, were merely semifinished products.[5] Hence, applying the rationale of the above-cited cases, annealing and pickling were steps in the creation of commercially acceptable angles, and thus should not be considered as advancements within the purview of the statute.

Defendant argues that annealing and pickling should be considered as advancements, since those treatments were unnecessary to produce angles of alloy iron or steel. However, defendant ignores the fact that the specific type of alloy steel of which the imports were composed (stainless types 304 and 316) required the annealing and pickling operations to be commercially acceptable. Moreover, the fact that the imports were in the shape of angles after leaving the hot rolling mill does not override the more important consideration that the imports would not have been commercially acceptable angles without the annealing and pickling operations. This aspect of the case is especially pointed up by the admission of defendant's witness Thomas that he had never encountered a single order for nonannealed and nonpickled stainless steel angles, such as the imports (R. 116–117).

As underpinning for its contention that the imports were otherwise advanced by reason of the annealing and pickling processes, defendant cites: *Karl Schroff & Associates, Inc.* v. *United States*, 67 Cust. Ct. 4, C.D. 4244 (1971); *Edward W. Daniel Company* v. *United States*, 67 Cust. Ct. 132, C.D. 4264 (1971); and *F. W. Myers & Co., Inc.* v. *United States*, 45 Cust. Ct. 124, C.D. 2210 (1960).

In *Schroff* and *Daniel*, the TSUS provision under construction covered "Forgings of iron or steel, not machined, not tooled, and not otherwise processed after forging," which provision appears in the superior heading to item 608.25. In both cases, the court addressed the issue as to whether certain forgings were otherwise processed after forging by reason of a heat treatment known as normalizing to which the merchandise was subjected after forging. Since normalizing was not found to be incidental to creating the forgings, but rather was a

[5] As pointed up in defendant's exhibit A, a steel products manual published by the American Iron and Steel Institute, p. 29: "*Heat Treatment. Stainless and heat resisting steels are seldom placed in service in the hot rolled or forged condition.* Annealing or other forms of heat treatment are desirable to obtain the full advantage of the corrosion resisting and mechanical properties of these steels. However, for *certain applications*, particularly those involving *high temperature service*, it may be desirable to use some types in the as-rolled or forged condition." [Italic added.]

subsequent process, the merchandise was held to have been otherwise processed after forging, and therefore excluded from item 608.25, TSUS.

Inasmuch as the statutory language under construction in *Schroff* and *Daniel* is different from that under consideration in the present case, defendant's reliance upon those cases is misplaced.

The statutory language under construction in *Schroff* and *Daniel* was otherwise processed after forging. Since the term "forging" connotes a specific manufacturing process and also describes a class of articles, the court was required to determine whether normalizing was incidental to the forging process, or as found by the court, subsequent thereto. If the language here under construction were "not otherwise processed after rolling,"[6] than the legal issue in *Schroff* and *Daniel* would be analogous to that now presented, and the court would be required to determine whether the annealing and pickling operations were incidental to the rolling process or subsequent thereto. However, the issue here is not whether annealing and pickling were incidental to the rolling process,[7] but rather whether the angles were otherwise advanced. For the reasons previously expressed, I have concluded that the imports were not otherwise advanced by reason of the annealing and pickling operations. The short of the matter is *Schroff* and *Daniel* are not pertinent to the issue in the present case because of the different statutory language involved.

The *Myers* case cited by defendant is similarly inapposite. There, the issue was the proper tariff classification for certain steel castings which were annealed after casting. The court agreed with the Government's contention that the annealing process, which occurred subsequent to casting, advanced the merchandise beyond the status of mere castings (45 Cust. Ct. at 129), citing *inter alia Mountain Copper Co.* v. *United States*, 40 Treas. Dec. 103, T.D. 38823 (1921). In *Mountain Copper*, the Board of General Appraisers (predecessor of the Customs Court) in determining the classification of certain castings that had been annealed by a separate process, observed inter alia that "annealing ordinarily forms no part of the usual casting process, and articles so subsequently treated have thereby been further advanced

[6] Where Congress intended that classification be based upon whether the merchandise had been processed or advanced after a certain manufacturing operation, Congress explicitly so provided. Thus, in *Schroff* and *Daniel*, the issue was whether the articles were processed after forging. Additionally, it may be noted that Congress provided for the classification of malleable cast-iron fittings under items 610.70 through 610.74, TSUS, based upon whether such fittings have been "advanced in condition by operations or processes subsequent to the casting process." It may be added that where Congress intended to exclude certain merchandise from classification under a specific item number in part 2 of schedule 6 because it has been subjected to one of the treatments enumerated in headnote 1, explicit language to that effect is expressed within the special tariff provision. For example, items 608.70 through 608.78, TSUS, distinguish between tempered and nontempered wire rods; items 608.84 through 608.88 distinguish between pickled and nonpickled plates and sheets of iron or steel.

[7] There is no dispute that the annealing and pickling operations were not incidental to the rolling process.

in manufacture beyond the point where they may be considered mere castings."

Myers is distinguishable from the present case for the same reason that *Schroff* and *Daniel* are inapposite. The term "castings" (like "forgings") connotes a specific manufacturing process and also describes a certain class of articles. Consequently, in *Myers* the court was required to determine whether annealing was part of the usual casting process or a subsequent treatment. As previously observed, the issue here is not whether annealing and pickling were incidental to the rolling operation or a subsequent treatment. Although concededly annealing and pickling were not incidental to the rolling operation, nevertheless those processes were essential to and an integral part of the creation of the imported stainless steel angles (R. 53, 79, 80). In sum, the issue in *Myers* is not analogous to that presented here.

Although the facts in this case clearly show that the imports were not otherwise advanced by reason of the annealing and pickling operations, I agree with plaintiff's contention that the same conclusion may be reached by applying the doctrine of ejusdem generis. Briefly stated, under the doctrine of ejusdem generis "where particular words of description are followed by general terms, the latter refer only to things of a like class with those particularly described." *United States* v. *C. J. Tower & Sons*, 44 CCPA 1, 5, C.A.D. 626 (1956). Here, the words "otherwise advanced" in the statute are preceded by the words "drilled" and "punched".

The record shows that drilling and punching (holemaking operations) are mechanical processes by which finished angles are fabricated for assembly with other components. Hence, applying ejusdem generis to the statutory provision involved herein requires that the words "otherwise advanced" be interpreted as encompassing only mechanical operations performed after the essential characteristics of the angles are attained. However, annealing and pickling are respectively thermal and chemical operations, which in the instant case were employed in the creation of commercially acceptable stainless steel angles. Therefore, it is apparent that annealing and pickling are not ejusdem generis with drilling and punching.

As strikingly analogous to the present case, plaintiff has called attention to *Border Brokerage Company, Inc.* v. *United States*, 60 Cust. Ct. 487, C.D. 3437 (1968) wherein the court construed the superior heading to item 141.80, TSUS, which provides for "Vegetables * * * packed in salt, in brine, pickled, *or otherwise prepared or preserved* * * *" [italic added]. One of the issues was whether the subject vegetables were otherwise prepared or preserved within the ambit of the statute by reason of freezing or blanching. Concerning that issue, the court applied ejusdem generis, citing *C. J. Tower*, *supra*, and held

that freezing and blanching are not ejusdem generis with the enumerated processes of packing in salt, or in brine, or pickling.

CONCLUSION

The record and relevant legal principles discussed herein lead inexorably to the conclusion that the imported angles were not otherwise advanced by the annealing and pickling processes. Consequently, the presumption of correctness attaching to the Government's classification of the merchandise under item 609.86, TSUS, has been overcome, and the proper classification for the merchandise is under item 609.82, TSUS, as claimed by plaintiff.

Judgment will be entered accordingly.

Decisions of the United States Customs Court

Abstracts

Abstracted Protest Decisions

DEPARTMENT OF THE TREASURY, *June 2, 1980.*

The following abstracts of decisions of the United States Customs Court at New York are published for the information and guidance of officers of the customs and others concerned. Although the decisions are not of sufficient general interest to print in full, the summary herein given will be of assistance to customs officials in easily locating cases and tracing important facts.

ROBERT E. CHASEN,
Commissioner of Customs.

DECISION NUMBER	JUDGE & DATE OF DECISION	PLAINTIFF	COURT NO.	ASSESSED	HELD	BASIS	PORT OF ENTRY AND MERCHANDISE
				Par. or Item No. and Rate	Par. or Item No. and Rate		
P80/73	Richardson, J. May 27, 1980	Fairchild Semiconductor, A Division of Fairchild Camera and Instrument Corporation	71-11-01794	Item 687.60 11% or 10% on full value of imported merchandise Item 687.60/807.00	Item 687.60/807.00 Cost or value of U.S. products deductible from value of im-	U.S. v. Texas Instruments Incorporated (C.A.D. 1178) General Instrument Corporation v. U.S. (C.A.D. 1062)	San Francisco American goods returned; semiconductors, transistors and/or integrated circuits containing U.S. fabricated components

				11% or 10% on full value of imported merchandise, less cost or value of U.S. products	ported merchandise; correct amount of duty as to each entry shown on exhibit 2 attached to decision and judgment as "Revised Duty"		(silicon dice and gold wire)
P80/74	Richardson, J. May 27, 1980	Fairchild Semiconductor, A Division of Fairchild Camera and Instrument Corporation	72-10-02089	Item 687.60 11%, 10% or 8.5% on full value of imported merchandise Items 687.60/807.00 11%, 10% or 8.5% on full value of imported merchandise, less cost or value of U.S. products	Item 687.60/807.00 Cost or value of U.S. products deductible from value of imported merchandise; correct amount of duty as to each entry shown on exhibit 2 attached to decision and judgment as "Revised Duty"	U.S. v. Texas Instruments Incorporated (C.A.D. 1178) General Instrument Corporation v. U.S. (C.A.D. 1002)	San Francisco American goods returned; semiconductors, transistors and/or integrated circuits containing U.S. fabricated components (silicon dice and gold wire)

DECISION NUMBER	JUDGE & DATE OF DECISION	PLAINTIFF	COURT NO.	ASSESSED	HELD	BASIS	PORT OF ENTRY AND MERCHANDISE
				Par. or Item No. and Rate	Par. or Item No. and Rate		
P80/75	Richardson, J. May 27, 1980	Fairchild Semiconductor, A Division of Fairchild Camera and Instrument Corporation	73-10-02754	Item 687.60 10%, 8.5% or 7% on full value of imported merchandise Items 687.60/807.00 10%, 8.5% or 7% on full value of imported merchandise, less cost or value of U.S. products	Items 687.60/807.00 Cost or value of U.S. products deductible from value of imported merchandise; correct amount of duty as to each entry shown on exhibit 2 attached to decision and judgment as "Revised Duty"	U.S. v. Texas Instruments Incorporated (C.A.D. 1178) General Instrument Corporation v. U.S. (C.A.D. 1062)	San Francisco American goods returned; semiconductors, transistors and/or integrated circuits containing U.S. fabricated components (silicon dice and gold wire)
P80/76	Maletz, J. May 27, 1980	Mim Lador, Inc.	75-12-0330, etc.	Item 737.80 22%	Item 725.50 8%	Amico, Inc. v. U.S. (C.A.D. 1214)	New York Wooden musical figurines, musical merry-go-round, musical soldiers, dancing figurines, music boxes, etc.
P80/77	Newman, J. May 27, 1980	Atlas Rand Keystone, d/o Berkey Photo, Inc., et al.	73-9-02670	Item 722.34 10%	Item 722.75 4.5%	Agreed statement of facts	New York Photographic light meters and photographic meter assemblies

P80/78	Newman, J. May 27, 1980	S.G.B. Steel Scaffolding and Shoring Co., Inc.	71-8-00758	Item 657.20 15%, 13% or 11%	Item 652.98 11% or 9.5%	S.G.B. Steel Scaffolding & Shoring Co., Inc. v. U.S. (C.D. 4802)	New York Shore frame systems and parts
P80/79	Landis, J. May 29, 1980	Frankel Company, Inc.	78-4-00556	Item 629.20 18%	Item 629.15/ 911.1220 Duty free	Agreed statement of facts	Detroit Titanium scrap
P80/80	Landis, J. May 29, 1980	Minnesota Mining & Manufacturing Company	78-2-00231, etc.	Item 676.52 5.5%	Item 676.30 5%	Agreed statement of facts	Seattle "Toshiba electrostatic copying machines"
P80/81	Landis, J. May 29, 1980	F. W. Woolworth	79-8-01296	Item 389.62 15% plus 25¢ per lb.	Item A734.77 Free of duty pursuant to General Headnote 3(c) of TSUS, authorized by title V of Trade Act of 1974, and Ex. Order No. 11888 of 11/26/75	Agreed statement of facts	New Orleans Golf head covers produced within Korea

Decisions of the United States Customs Court

Abstracts

Abstracted Reappraisement Decisions

DECISION NUMBER	JUDGE & DATE OF DECISION	PLAINTIFF	COURT NO.	BASIS OF VALUATION	HELD VALUE	BASIS	PORT OF ENTRY AND MERCHANDISE
R80/163	Re, C. J. May 27, 1980	Himalaya, Inc.	77-4-00667, etc.	Export value	Various appraised values shown on entry papers less those additions which were included in said appraised values to reflect currency revaluation	Agreed statement of facts	New York Miscellaneous merchandise
R80/164	Ford, J. May 28, 1980	B & K Instruments, Inc.	R66/15323, etc.	Export value	Invoice unit prices less, where applicable, the items specified on invoices as saved packing	Agreed statement of facts	Cleveland Instruments and parts
R80/165	Ford, J. May 28, 1980	B & K Instruments, Inc.	R68/7351, etc.	Export value	Invoice unit prices less, where applicable, the items specified on invoices as saved packing.	Agreed statement of facts	Cleveland Instruments and parts

R80/166	Ford, J. May 28, 1980	B & K Instruments, Inc.	R69/13564, etc.	Export value	Invoice unit prices less, where applicable, items specified on invoices as saved packing	Agreed statement of facts	Cleveland Instruments and parts
R80/167	Ford, J. May 28, 1980	B & K Instruments, Inc.	R70/4723, etc.	Export value	Invoice unit prices less, where applicable, items specified on invoices as saved packing	Agreed statement of facts	Cleveland Instruments and parts
R80/168	Re, C. J. May 29, 1980	Andrew Fisher Cycle Company, Inc.	75-4-00921	Export value	Appraised value less 11.4% addition for currency fluctuation	C.B.S. Imports Corp. v. U.S. (C.D. 4739)	Houston Bicycle parts
R80/169	Landis, J. May 29, 1980	Yoshida International, Inc., YKK Zipper, Inc., et al.	75-4-00793, etc.	Constructed value (if exported from Japan prior to 2/1/72) United States value (if exported on or after 2/1/72)	Equal to invoiced unit prices plus 8.5%, net, packed Equal to invoiced unit prices, net, packed	Agreed statement of facts	Los Angeles Zippers and/or zipper parts classified under item 745.70, 745.72 or 745.74

Judgment of the U.S. Customs Court in Appealed Case

MAY 27, 1980

Appeal 79-18.—Schott Optical Glass, Inc. *v.* United States.—COLOR FILTER GLASS—OPTICAL GLASS—COLORED OR SPECIAL GLASS—TSUS.—C.D. 4783 affirmed December 20, 1979 (C.A.D. 1239), rehearing denied February 21, 1980.

International Trade Commission Notices

Investigations by the U.S. International Trade Commission

DEPARTMENT OF THE TREASURY

The appended notices relating to investigations by the U.S. International Trade Commission are published for the information of Customs Officers and others concerned.

R. E. CHASEN,
Commissioner of Customs.

In the Matter of CHLOROFLUOROHYDROCARBON DRYCLEANING PROCESS, MACHINES AND COMPONENTS THEREFOR	Investigation No. 337-TA-84

Notice of Investigation

Notice is hereby given that a complaint was filed with the U.S. International Trade Commission on April 17, 1980, under section 337 of the Tariff Act of 1930, (19 U.S.C. 1337), on behalf of Research Development Co., 1620 Central Avenue NE., Minneapolis, Minn. 55413, alleging that unfair methods of competition and unfair acts exist in the importation into the United States of certain drycleaning machines or in their sale, because such drycleaning machines allegedly contribute to and induce the infringement of the drycleaning process covered by claims 1, 3, and 4 of U.S. Letters Patent 3,728,074. The complaint alleges that the effect or tendency of the unfair methods of competition and unfair acts is to substantially injure an industry, efficiently and economically operated, in the United States.

Conplainant requests that, after a full investigation has been conducted, the Commission either order exclusion of the imports in question or issue a cease and desist order.

Having considered the complaint, the Commission on May 13, 1980, ordered that—

(1) Pursuant to subsection (b) of section 337 of the Tariff Act of 1930, (19 U.S.C. 1337), an investigation be instituted to determine whether there is a violation of subsection (a) of this section in the unauthorized importation of certain drycleaning machines, and components therefor, into the United States, or in their sale, because such drycleaning machines, and components therefore, allegedly contribute to and induce the infringement of the drycleaning process covered by claims 1, 3, and 4 of U.S. Patent 3,728,074, the effect or tendency of which is to substantially injure an industry, efficiently and economically operated, in the United States;

(2) For the purpose of the investigation so instituted, the following are named as parties upon which this notice of investigation shall be served:

(a) The complainant is Research Development Co., 1620 Central Avenue NE., Minneapolis, Minn. 55413.

(b) The respondents are the following companies alleged to be engaged in the unauthorized importation of certain drycleaning machines, and components therefor, into the United States, or in their sale, and are the parties upon which the complaint is to be served:

American Permac, Inc.
175 Express Street
Plainview, N.Y. 11803

Harvcons Universal, Inc.
8505 Whitfield Park Loop
Sarasota, Fla. 33580

Spencer America, Inc.
2036 Congressional Drive
St. Louis, Mo. 63141

I. Goldfarb & Sons
48 Babson Street
Mettapan, Mass. 02126

Bohler & Weber KG
Maschinenfabrik
Haunstetter Str. 112
D–8900 Augsburg
Germany

Ama Universal
40013 Castel Maggiore
Bologna, Italy

Neil & Spencer, Ltd.
Station Road
Leather Head
Surrey, England

Macchine Suprema
40050 Funo
Bologna, Italy

(c) David J. Dir, U.S. International Trade Commission, 701 E Street NW., Washington, D.C. 20436, is hereby named Commission investigative attorney, a party to this investigation; and

(3) For the investigation so instituted, Chief Administrative Law Judge Donald K. Duvall, U.S. International Trade Commission, 701 E Street NW., Washington, D.C. 20436, shall designate the presiding officer.

The phrase "and components therefor" has been added to para-

graph (1) above on the basis of the informal investigatory activities by the Commission investigative attorney which reveals that dry-cleaning machines of the type alleged to contribute to and induce infringement of the process covered by claims 1, 3, and 4 of U.S. letters patent 3,728,074 can be imported in component parts as well as entirely assembled units.

Responses must be submitted by the named respondents in accordance with section 210.21 of the Commission's Rules of Practice and Procedure (19 CFR 210.21). Pursuant to sections 201.16(d) and 210.21 (a) of the rules, such responses will be considered by the Commission if received not later than 20 days after the date of service of the complaint. Extensions of time for submitting a response will not be granted unless good and sufficient cause therefor is shown.

Failure of a respondent to file a timely response to each allegation in the complaint and in this notice may be deemed to constitute a waiver of the right to appear and contest the allegations of the complaint and this notice, and to authorize the presiding officer and the Commission, without further notice to the respondent, to find the facts to be as alleged in the complaint and this notice and to enter both a recommended determination and a final determination containing such findings.

The complaint, except for confidential information contained therein, is available for inspection by interested persons at the Office of the Secretary, U.S. International Trade Commission, 701 E Street NW., Washington, D.C. 20436, an in the Commission's New York City Office, 6 World Trade Center, New York, N.Y. 10048

By order of the Commission.

Issued: June 2, 1980.

KENNETH R. MASON,
Secretary.

In the Matter of CERTAIN ADJUSTABLE WINDOW SHADES AND COMPONENTS THEREOF	Investigation No. 337–TA–83

Order

Pursuant to my authority as Chief Administrative Law Judge of this Commission, I hereby designate Administrative Law Judge Janet D. Saxon as presiding officer in this investigation.

The Secretary shall serve a copy of this order upon all parties of record and shall publish it in the Federal Register.

Issued: June 2, 1980.

DONALD K. DUVALL,
Chief Administrative Law Judge.

Textiles and Textile Products of Cotton from Pakistan Investigations Nos. 701-TA-62 (Final) and 701-TA-63 (Final)

Notice of Scheduling of Hearing

ACTION: Notice is hereby given that:

(a) Public hearing date changed to 10 a.m., e.d.t., Friday, June 27, 1980, in the Commission's hearing room, 701 E Street NW., Washington, D.C.;

(b) Prehearing staff report will be available to the parties on Thursday, June 5, 1980; and

(c) Prehearing statements are due from parties by Thursday, June 19, 1980.

FOR FURTHER INFORMATION CONTACT: Vera Libeau, the senior investigator assigned by the Commission to this investigation; telephone 202-523-0368.

SUPPLEMENTARY INFORMATION: The Commission instituted investigation No. 701-TA-62 (final) effective April 8, 1980 (45 F.R. 25977, Apr. 16, 1980) and instituted investigation No. 701-TA-63 (final) effective May 2, 1980 (45 F.R. 31834, May 14, 1980), pursuant to section 705(b)(1) of the Tariff Act of 1930. Those notices incorporated a tentative hearing date of June 25, 1980, which has been changed at the request of the parties to June 27, 1980.

By order of the Commission.

Issued: June 3, 1980.

KENNETH R. MASON,
Secretary.

Index

U.S. Customs Service

Treasury decisions:
- Foreign currencies: T.D. No.
  - Daily certified rates; May 27–30, 1980 80–158
  - Rates which varied from quarterly rate; week of May 27–30, 1980 80–159

Customs Court

Admission refused; biscuits, cookies and candy, C.D. 4858
"Advanced", what term embraces, C.D. 4859
Alloy steel angles, not drilled, punched or otherwise advanced; stainless steel angles, C.D. 4859
"Angles, shapes and sections, all the foregoing, of iron or steel, * * * Drilled, punched, or otherwise advanced: * * * Alloy iron or steel," C.D. 4859
Annealing and pickling, not ejusdem generis with drilling and punching; ejusdem generis doctrine, C.D. 4859
Biscuits, cookies and candy; admission refused, C.D. 4858
Congressional intent, determined by reference to relevant headnotes; statutory construction, C.D. 4859
Construction:
- Customs Administrative Act of 1938, C.D. 4858
- Rules of U.S. Customs Court, rule 8.2(b), C.D. 4858
- Tariff Schedules of the United States:
  - Item 607.01, C.D. 4859
  - Item 607.02, C.D. 4859
  - Item 609.82, C.D. 4859
  - Item 609.86, C.D. 4859
  - Items 610.70–610.74, C.D. 4859
  - Schedule 6, part 2:
    - Headnote 1, C.D. 4859
    - Subpart B, headnote 4, C.D. 4859
- United States Code, title 19:
  - Sec. 1558, C.D. 4858
  - Sec. 1558(a)(2), C.D. 4858

Cross-motions for summary judgment, C.D. 4858
Drilling and punching, C.D. 4859
Ejusdem generis doctrine; annealing and pickling, not ejusdem generis with drilling and punching, C.D. 4859
Interpretation; otherwise advanced, C.D. 4859
Judgment in appealed case (p. —):
- Appeal 79–18—Color filter glass; optical glass; colored or special glass; TSUS

Otherwise advanced; interpretation, C.D. 4859
Pickling, C.D. 4859
Prohibited merchandise, C.D. 4858
Punching, C.D. 4859
Stainless steel angles; alloy steel angles, not drilled, punched or otherwise advanced, C.D. 4859
Statutory construction; congressional intent, determined by reference to relevant headnotes, C.D. 4859.
Summary judgment, cross-motions for, C.D. 4858
Words and phrases:
    Advancement, C.D. 4859
    Annealing, C.D. 4859
    Not otherwise advanced, C.D. 4859
    Otherwise advanced, C.D. 4859
    Pickling, C.D. 4859
    Prohibited, C.D. 4858

JUL 3 1980
Item 950-D
contin
T1.11/3:14/27
J4-322-2/14
377

Customs Bulletin

Regulations, Rulings, Decisions, and Notices concerning Customs and related matters

and Decisions

of the United States Court of Customs and Patent Appeals and the United States Customs Court

9247

Vol. 14 JULY 2, 1980 No. 27

This issue contains

T.D. 80–160 through 80–174
ERRATUM
General Notice
Protest abstracts P80/82 through P80/87
Reap. abstracts R80/170 through R80/177
International Trade Commission Notices

THE DEPARTMENT OF THE TREASURY
U.S. Customs Service

NOTICE

The abstracts, rulings, and notices which are issued weekly by the U.S. Customs Service are subject to correction for typographical or other printing errors. Users may notify the U.S. Customs Service, Logistics Management Division, Washington, D.C. 20229, of any such errors in order that corrections may be made before the bound volumes are published.

For sale by the Superintendent of Documents, U.S. Government Printing Office, Washington, D.C. 20402. Price: $2.25 (single copy domestic); $2.85 (single copy foreign). Subscription price: $85.00 a year domestic; $106.25 a year foreign.

U.S. Customs Service

Treasury Decisions

(T.D. 80-160)

Fines, Penalties, and Forfeitures—Customs Regulations Amended

Parts 103, 171, Customs Regulations, relating to availability of guidelines for mitigation of claims for monetary penalties assessed pursuant to section 592, Tariff Act of 1930, amended

TITLE 19—CUSTOMS DUTIES

CHAPTER I—U.S. CUSTOMS SERVICE

PART 103—AVAILABILITY OF INFORMATION

PART 171—FINES, PENALTIES, AND FORFEITURES

AGENCY: U.S. Customs Service, Department of the Treasury.

ACTION: Final rule.

SUMMARY: The guidelines used by Customs for mitigation of claims for monetary penalties assessed pursuant to section 592, Tariff Act of 1930, as amended, were recently approved by the Treasury Department. This document advises the public that the mitigation guidelines are available, upon request, from Customs. The fact that the mitigation guidelines are available is also incorporated in the Customs Regulations.

EFFECTIVE DATE: Upon publication in the Federal Register.

FOR FURTHER INFORMATION CONTACT: Marilyn Morrison, Entry Procedures and Penalties Division, U.S. Customs Service, 1301 Constitution Avenue NW., Washington, D.C. 20229; 202-566-8317.

SUPPLEMENTARY INFORMATION:

BACKGROUND

The Customs Procedural Reform and Simplification Act of 1978 (Public Law 95-410), approved October 3, 1978 (the act), made

numerous amendments to statutes administered by Customs which relate to fines, penalties, forfeitures, and liquidated damages for violations of customs and navigation laws. Under the act, section 592, Tariff Act of 1930 (19 U.S.C. 1592), relating to entry of merchandise by fraud or negligence, was amended.

New procedures were adopted for the imposition of a monetary penalty or, in limited circumstances, for the seizure of merchandise, for a violation of 19 U.S.C. 1592 in a document published as T.D. 79–160 in the Federal Register on June 4, 1979 (44 F.R. 31950). Guidelines used by Customs for the mitigation of claims for monetary penalties assessed pursuant to 19 U.S.C. 1592 were recently approved by the Treasury Department. This document advises the public that the mitigation guidelines are available upon request from Customs and amends the Customs Regulations as set forth below.

NOTICE OF AVAILABILITY OF MITIGATION GUIDELINES

The guidelines for mitigation by Customs of claims for monetary penalties assessed pursuant to section 592, Tariff Act of 1930, as amended, as approved by the Treasury Department on March 7,1980, are available upon written request to the Commissioner of Customs, Attention: Office of Regulations and Rulings, 1301 Constitution Avenue NW., Washington D.C. 20229, in accordance with part 103, Customs Regulations (19 CFR, part 103), relating to the availability of information.

AMENDMENTS TO THE REGULATIONS

Parts 103 and 171, Customs Regulations (19 CFR, parts 103, 171), are amended as set forth below:

PART 103—AVAILABILITY OF INFORMATION

Section 103.7, Customs Regulations, is amended by inserting "Guidelines for Mitigation of Claims for Monetary Penalties Assessed Pursuant to Section 592, Tariff Act of 1930, as amended," in appropriate alphabetical order in the listing of documents in the section. (R.S. 251, as amended, sec. 624, 46 Stat. 759 (19 U.S.C. 66, 1624).)

PART 171—FINES, PENALTIES, AND FORFEITURES

Subpart C of part 171, Customs Regulations, is amended by adding a new section 171.23 to read as follows:

171.23. Availability of mitigation guidelines for monetary penalties assessed pursuant to section 592, Tariff Act of 1930, as amended.

The guidelines used by the Customs Service for the mitigation of claims for monetary penalties assessed pursuant to section 592, Tariff

Act of 1930, as amended, are available upon written request to the Commissioner of Customs, Attention: Office of Regulations and Rulings, 1301 Constitution Avenue NW., Washington, D.C. 20229. (R.S. 251, as amended, sec. 624, 46 Stat. 759 (19 U.S.C. 66, 1624).)

INAPPLICABILITY OF PUBLIC NOTICE REQUIREMENT AND DELAYED EFFECTIVE DATE

Because the subject matter of this document does not constitute a departure from established policy or procedures, and is totally informational in nature, pursuant to 5 U.S.C. 553(b)(B), notice and public procedure thereon are unnecessary and contrary to the public interest. Further, for the same reasons, good cause exists for dispensing with the delayed effective date provisions of 5 U.S.C. 553(d).

REGULATION DETERMINED TO BE NONSIGNIFICANT

In the directive implementing Executive Order 12044, the Treasury Department stated that it considers each regulation or amendment to an existing regulation published in the Federal Register and codified in the Code of Federal Regulations to be significant. However, regulations which are nonsubstantive, are essentially procedural, do not materially change existing or establish new policy, and do not impose substantial additional requirements or costs on, or substantially alter the legal rights or obligations of, those affected, may, with Secretarial approval, be determined not to be significant. Accordingly, it has been determined that this document does not meet the Treasury Department criteria in the directive for significant regulations.

DRAFTING INFORMATION

The principal author of this document was John E. Elkins, Regulations and Research Division, Office of Regulations and Rulings, U.S. Customs Service. However, personnel from other Customs offices participated in its development.

WILLIAM T. ARCHEY,
Commissioner of Customs.

Approved: June 6, 1980.
RICHARD J. DAVIS,
Assistant Secretary of the Treasury.

[Published in the Federal Register June 17, 1980 (45 F.R. 40975)]

(T.D. 80-161)

Bonds

Approval and discontinuance of consolidated aircraft bonds (air carrier blanket bonds) Customs form 7605

The following consolidated aircraft bonds have been approved or discontinued as shown below. The symbol "D" indicates that the bond previously outstanding has been discontinued on the month, day, and year represented by the figures which follow. "PB" refers to a previous bond, dated as represented by the figures in parentheses immediately following, which has been discontinued. If the previous bond was in the name of a different company or if the surety was different, the information is shown in a footnote at the end of the list.

Dated: June 13, 1980.

Name of principal and surety	Date term commences	Date of approval	Filed with district director/area director/amount
Pacific Southwest Airlines, 3225 North Harbor Dr., San Diego, CA; Safeco Insurance Company of America	Apr. 20, 1980	Apr. 20, 1980	Los Angeles, CA; $100,000

NOTE.—The foregoing principal has not been designated as a carrier of bonded merchandise.

Name of principal and surety	Date term commences	Date of approval	Filed with district director/area director/amount
Seaboard World Airlines, Inc., John F. Kennedy Airport, Jamaica, NY; Peerless Insurance Company (PB 4/28/78) D 11/15/79 [1]	Apr. 14, 1980	Apr. 14, 1980	J. F. K. Airport; $100,000
Union De Transports Aeriens c/o Compagnie Nationale Air France, 1350 Avenue of the Americas, New York, NY; Insurance Company of North America	May 14, 1980	May 20, 1980	New York Seaport; $100,000

[1] Surety is American Motorists Insurance Co.

NOTE.—The foregoing principal has been designated as a carrier of bonded merchandise.

BON-3-01

ALFRED G. SCHOLLE,
Director,
Carriers, Drawback and Bonds Division.

(T.D. 80-162)

Bonds

Approval and discontinuance of carriers bonds, Customs form 3587

Bonds of carriers for the transportation of bonded merchandise have been approved or discontinued as shown below. The symbol "D" indicates that the bond previously outstanding has been discontinued on the month, day, and year represented by the figures which follow. "PB" refers to a previous bond, dated as represented by figures in parentheses immediately following, which has been discontinued. If the previous bond was in the name of a different company or if the surety was different, the information is shown in a footnote at the end of the list.

Dated: June 16, 1980.

Name of principal and surety	Date of bond	Date of approval	Filed with district director/area director/amount
American Pacific Container Line, Inc., 501 Army St., San Francisco, CA; water carrier; Fireman's Fund Ins. Co. D 5/12/80	Nov. 15, 1979	Feb. 25, 1980	San Francisco, CA; $50,000
Andrews Van Lines, Inc., 7th St. and Park Ave., Norfolk, NB; motor carrier; Reliance Ins. Co. (PB 1/1/75) D 5/20/80 [1]	Apr. 1, 1980	May 20, 1980	Chicago, IL; $25,000
Atlantic Coast Express, Inc., 2170 N. Fleet St., Elizabeth, NJ; motor carrier; Midland Ins. Co.	May 5, 1980	May 16, 1980	Newark, NJ; $100,000
Atomic Interprovincial Transport, 2070 Logan Ave., Winnipeg, Manitoba, Canada; motor carrier; Transamerica Ins. Co.	May 23, 1980	May 27, 1980	Pembina, ND; $25,000
Boss Linco Lines, Inc., 3909 Genesee St., Buffalo, NY; motor carrier; St. Paul Fire & Marine Ins. Co. (PB9/20/77)D6/1/80 [2]	May 23, 1980	June 1, 1980	Buffalo, NY; $40,000
Budig Trucking Co., 1100 Gest St., Cincinnati, OH; motor carrier; Commercial Union Ins. Co. D 5/23/80	Mar. 18, 1974	Apr. 19, 1974	Cleveland, OH; $50,000
Buske Lines, Inc., 123 W. Tyler, P.O. Box 349, Litchfield, IL; motor carrier; St. Paul Fire & Marine Ins. Co.	May 5, 1980	May 22, 1980	Detroit, MI; $50,000
Columbia Air/Frate, Inc., P.O. Box 66311, Chicago, IL; freight forwarder; St. Paul Fire & Marine Ins. Co. D 6/3/80	Mar. 22, 1976	Apr. 5, 1976	Chicago, IL; $25,000
Commercial Transport Corp., 1701 East Market St., P.O. Box 610, Jeffersonville, IN; water carrier; Federal Ins. Co. D 5/22/80	Feb. 21, 1962	Feb. 21, 1962	Cleveland, OH $100,000

Footnotes at end of table.

Name of principal and surety	Date of bond	Date of approval	Filed with district director/area director/amount
Continental Pipe Line Co., P.O. Box 1267, Ponca City, OK; pipe line; Federal Ins. Co. (PB 5/13/68) D 5/15/80 [3]	Apr. 30, 1980	May 15, 1980	Great Falls, MT; $75,000
Convoy Co., 3900 N.W. Yeon Ave., Portland, OR; motor carrier; Employers Insurance of Wausau (PB 2/27/74) D 5/16/80 [4]	May 15, 1980	May 16, 1980	Portland, OR; $25,000
East Texas Motor Freight, 623 N. Washington, P.O. Box 10125, Dallas, TX; motor carrier; Gulf Ins. Co. (PB 3/20/75) D 4/10/80 [5]	Mar. 20, 1980	Apr. 10, 1980	Houston, TX; $25,000
Equipment Express Limited, 8105 Woodbine Ave., Markham, Ontario, Canada; motor carrier; St. Paul Fire & Marine Ins. Co.	June 3, 1980	June 6, 1980	Detroit, MI; $50,000
Frederickson Motor Express Corp., P.O. Box 21098, Charlotte, NC; motor carrier; The Travelers Indemnity Co.	Mar. 24, 1980	Apr. 11, 1980	Wilmington, NC; $25,000
Garcia Transport Co., 12312 N.E. Whitaker Way, Portland, OR; motor carrier; Washington International Ins. Co. (PB 4/26/77) D 5/29/80 [6]	May 28, 1980	May 29, 1980	Portland, OR; $25,000
Gateway Transfer, Inc., 1319 Sta. Rita Ave., Laredo, TX; motor carrier; American Indemnity Co. D 6/2/80	Aug. 3, 1978	Oct. 20, 1978	Laredo, TX; $25,000
Highway Express, Inc., 2416 W. Superior Ave., Cleveland, OH; motor carrier; Liberty Mutual Ins. Co. D 5/22/80	Oct. 4, 1968	Dec. 6, 1968	Cleveland, OH; $25,000
Kreitz Motor Express, Inc., 220 Park Road North; P.O. Box 375, Wyomissing, PA; motor carrier; Western Surety Co.	Feb. 23, 1980	May 27, 1980	Philadelphia, PA; $25,000
Matlack, Inc., 10 W. Baltimore Ave., Lansdowne, PA; motor carrier; American Home Assurance Co. (PB 6/1/77) D 6/1/80 [7]	June 1, 1980	June 1, 1980	Philadelphia, PA; $50,000
Melton Truck Lines, Inc., P.O. Box 7666, Shreveport, LA; motor carrier; Aetna Casualty & Surety Co.	May 7, 1980	May 19, 1980	Houston, TX; $25,000
Milwaukee Motor Transportation Co. (a WI Corp.) 516 West Jackson Blvd., Chicago, IL; motor carrier; The Aetna Casualty and Surety Co.	June 2, 1980	June 3, 1980	Chicago, IL; $35,000
Milwaukee Transfer & Fuel Co., Inc., 15360 R.R. Ave., Clackamas, OR; motor carrier; The Aetna Casualty and Surety Co.	May 30, 1980	May 30, 1980	Portland, OR; $25,000
O.K. Motor Service, Inc., 5400 S. Center, Summit, IL; motor carrier; National Surety Corp. D 6/2/80	Mar. 21, 1978	Apr. 21, 1978	Chicago, IL; $35,000

Footnotes at end of table.

Name of principal and surety	Date of bond	Date of approval	Filed with district director/area director/amount
Osborne Truck Line, Inc., 516 North 31st St., P.O. Box 909, Birmingham, AL; motor carrier; U.S. Fidelity and Guaranty Co.	Mar. 22, 1971	Apr. 7, 1971	Mobile, AL; $25,000
Regency Motor Freight, Inc., 26600 Van Born Rd., Dearborn Heights, MI; motor carrier; Continental Casualty Co.	Feb. 14, 1980	May 9, 1980	Milwaukee, WI; $25,000
Robbins Motor Transportation, Inc., P.O. Box 38, Essington, PA; motor carrier; Western Surety Co. (PB 4/8/76) D 4/8/80 [5]	Apr. 8, 1980	May 28, 1980	Philadelphia, PA; $25,000
Roll-On, Inc., Box 1962, Clovis, NM; motor carrier; Royal Globe Insurance Co.	Nov. 29, 1979	May 2, 1980	Ogdensburg, NY; $25,000
Silver Creek Leasing, Inc., 655 South Road, Boynton Beach, FL; motor carrier; Sentry Indemnity Co.	Feb. 28, 1980	May 23, 1980	Miami, FL; $50,000
Sunshine Express of Wilson, Inc., P.O. Box 4812, Rocky Mount, NC; motor carrier; U.S. Fidelity & Guaranty Co.	Mar. 31, 1980	Apr. 15, 1980	Wilmington, NC; $25,000
Tischler Express, Inc., 8408 Elliston Rd., Philadelphia, PA; motor carrier; American Motorists Ins. Co.	Apr. 21, 1980	May 27, 1980	Philadelphia, PA; $50,000
Victory Transfer Co., Inc., 1900 Markley, P.O. Box 201, Laredo, TX; motor carrier; St. Paul Fire & Marine Ins. Co.	May 23, 1980	June 5, 1980	Laredo, TX; $25,000
The Waggoners Trucking, Box 31357, Billings, MT; motor carrier; St. Paul Fire & Marine Ins. Co. (PB 10/23/79) D 7/2/80 [9]	May 23, 1980	June 5, 1980	Great Falls, MT; $25,000
J. J. Willis Trucking Co., P.O. Box 47127, Dallas, TX; motor carrier; Highlands Ins. Co. (PB 2/27/77) D 3/4/80 [10]	Mar. 5, 1980	Mar. 5, 1980	El Paso, TX; $25,000
Wyeth Laboratories, Mason, MI; motor carrier; Federal Insurance Co. of North America	Mar. 14, 1980	May 15, 1980	Detroit, MI; $50,000

[1] Surety is Insurance Company of North America.
[2] Surety is Insurance Company of North America.
[3] Surety is Hartford Accident & Indemnity Co.
[4] Surety is Mid-Century Insurance Co.
[5] Principal is East Texas Motor Freight System, surety is Safeco Insurance Company of America.
[6] Principal is Aicrag Corp., surety is the Aetna Casualty & Surety Co.
[7] Surety is Protective Insurance Co.
[8] Surety is Fidelity & Deposit Company of Maryland.
[9] Principal is Popelka Trucking Co., Inc. d/b/a The Waggoners.
[10] Surety is Reliance Insurance Co.

BON-3-03

ALFRED G. SCHOLLE,
Director,
Carriers, Drawback and Bonds Division.

322-274 O - 80 - 2

(T.D. 80-163)

Bonds

Approval and discontinuance of bonds on Customs form 7587 for the control of instruments of international traffic of a kind specified in section 10.41a of the Customs Regulations

Bonds on Customs form 7587 for the control of instruments of international traffic of a kind specified in section 10.41a of the Customs Regulations have been approved or discontinued as shown below. The symbol "D" indicates that the bond previously outstanding has been discontinued on the month, day, and year represented by the figures which follow. "PB" refers to a previous bond, dated as represented by the figures in parentheses immediately following which has been discontinued. If the previous bond was in the name of a different company or if a surety was different, the information is shown in a footnote at the end of the list.

Dated: June 16, 1980.

Name of principal and surety	Date of bond	Date of approval	Filed with district director/area director/amount
Baird Inc., Two Bala Cynwyd Plaza, Bala Cynwyd, PA; Peerless Ins. Co. D 5/14/80	May 9, 1979	May 11, 1979	Norfolk, VA; $10,000
Bedford Importers Ltd., 608 5th Ave., New York, NY; Peerless Ins. Co. D 5/26/80	May 26, 1978	June 1, 1978	New York Seaport; $10,000
Care Shipping, Inc., 325 North Belt, Suite 160, Houston, TX; St. Paul Fire & Marine Ins. Co.	Apr. 10, 1980	Apr. 21, 1980	Houston, TX; $50,000
Gas & Equipment (Transport) Ltd., Ashby St., Ledgers, England; Peerless Ins. Co.	May 22, 1980	May 30, 1980	Houston, TX; $50,000
Guerlain, Inc., Route #138, Somers, NY; Old Republic Ins. Co.	Apr. 22, 1980	Apr. 22, 1980	New York Seaport; $10,000
Henley & Co., Inc., 750 Third Ave., New York, NY; Washington International Ins. Co. D 6/29/80	June 29, 1978	July 13, 1978	New York Seaport; $10,000
ICC Industries Inc. & its wholly owned subsidiaries: ICC (Western Hemisphere) Corp. and ICC Export Inc., 720 Fifth Ave., New York, NY; Old Republic Ins. Co.	May 7, 1980	May 7, 1980	New York Seaport; $10,000
Intermaritime Forwarding Co., Inc., One World Trade Center, New York, NY; Old Republic Ins. Co.	May 14, 1980	May 14, 1980	New York Seaport; $10,000
Kulmbacker Import Co., Inc., 70-02 Cypress Hills Rd., Glendale, NY; Old Republic Ins. Co. D 5/28/80	Feb. 13, 1979	Feb. 22, 1979	New York Seaport; $10,000

Name of principal and surety	Date of bond	Date of approval	Filed with district director/area director/amount
Lykes Bros. Steamship Co., Inc., 300 Poydras St., New Orleans, LA; Hartford Accident & Indemnity Co. (PB 5/1/68) D 5/1/80	Apr. 23, 1980	May 9, 1980	New Orleans, LA; $10,000
Miller Brewing Co., 400 W. State St., Milwaukee, WI; Federal Ins. Co. D 5/12/80	May 23, 1977	June 10, 1977	Los Angeles, CA; $50,000
Trinicon (USA) Inc., 11980 San Vicente Blvd., #111, Los Angeles, CA; Old Republic Ins. Co.	Apr. 24, 1980	May 13, 1980	New Orleans, LA; $10,000
Vectra Corp., 8305 Telegraph Rd., Odenton, MD; Washington International Ins. Co.	Sept. 24, 1979	Nov. 21, 1979	Baltimore, MD; $10,000
Wallach-Gracer Export Corp. & its subsidiary Walgray International Inc., Empire State Bldg., Suite 6605, New York, NY; American Motorists Ins. Co.	Apr. 2, 1980	Apr. 4, 1980	New York Seaport; $10,000
Wheaton Van Lines Inc., 8010 Castleton Rd., P.O. Box 50800, Indianapolis, IN; Liberty Mutual Ins. Co.	Mar. 4, 1980	Apr. 7, 1980	New York Seaport; $10,000

BON-3-10

ALFRED G. SCHOLLE,
Director,
Carriers, Drawback and Bonds Division.

(T.D. 80-164)

Manmade Fiber Textile Products—Restriction of Entry

Restriction on entry of manmade fiber textile products manufactured or produced in Romania

There is published below a directive of May 13, 1980, received by the Commissioner of Customs from the chairman, Committee for the Implementation of Textile Agreements, concerning restriction on entry of manmade fiber textile products in category 635 manufactured or produced in Romania. This directive amends, but does not cancel, that committee's directive of December 12, 1979 (T.D. 80-49).

This directive was published in the Federal Register on May 16, 1980 (45 F.R. 32362), by the committee.

(QUO-2-1)

Dated: June 11, 1980.

WILLIAM D. SLYNE,
(For Chester R. Krayton, Director
Duty Assessment Division).

U.S. DEPARTMENT OF COMMERCE,
INTERNATIONAL TRADE ADMINISTRATION,
Washington, D.C., May 13, 1980.

Committee for the Implementation of Textile Agreements

COMMISSIONER OF CUSTOMS,
Department of the Treasury,
Washington, D.C.

DEAR MR. COMMISSIONER: This directive amends, but does not cancel, the directive issued to you on December 12, 1979, by the chairman, Committee for the Implementation of Textile Agreements, concerning imports into the United States of certain cotton, wool, and manmade fiber textile products, produced or manufactured in Romania.

Under the terms of the Arrangement Regarding International Trade in Textiles done at Geneva on December 20, 1973, as extended on December 15, 1977; pursuant to the Bilateral Wool and Man-Made Fiber Textile Agreement of June 17, 1977, as amended, between the Governments of the United States and the Socialist Republic of Romania; and in accordance with the provisions of Executive Order 11651 of March 3, 1972, as amended by Executive Order 11951 of January 6, 1977, you are directed to prohibit, effective on May 19, 1980, and for the 12-month period beginning on January 1, 1980, and extending through December 31, 1980, entry into the United States for consumption and withdrawal from warehouse for consumption of manmade fiber textile products in category 635, produced or manufactured in Romania, in excess of the following level of restraint:

Category	*12-month level of restraint*[1]
635	16,949 dozen

Textile products in category 635 which have been exported to the United States prior to January 1, 1980, shall be subject to this directive.

Textile products in category 635 which have been released from the custody of the U.S. Customs Service under the provisions of 19 U.S.C. 1448(b) or 1484(a)(1)(A) prior to the effective date of this directive shall not be denied entry under this directive.

A detailed description of the textile categories in terms of TSUSA numbers was published in the Federal Register on February 28, 1980 (45 F.R. 13172), as amended on April 23, 1980 (45 F.R. 27463).

[1] The level of restraint has not been adjusted to reflect any imports after Dec. 31, 1979. Imports during the period, January-March 1980, amounted to 2,760 dozen. Charges in the amount of 9,430 dozen, representing shipments in excess of the 1979 level of restraint should also be made to the above level.

In carrying out the above directions, entry into the United States for consumption shall be construed to include entry for consumption into the Commonwealth of Puerto Rico.

The actions taken with respect to the Government of the Socialist Republic of Romania and with respect to imports of manmade fiber textile products from Romania have been determined by the Committee for the Implementation of Textile Agreements to involve foreign affairs functions of the United States. Therefore, these directions to the Commissioner of Customs, which are necessary for the implementation of such actions, fall within the foreign affairs exception to the rulemaking provisions of 5 U.S.C. 553. This letter will be published in the Federal Register.

Sincerely,

PAUL T. O'DAY,
Chairman, Committee for the Implementation of Textile Agreements.

(T.D. 80-165)

Cotton and Manmade Fiber Textile Products—Restriction on Entry

Restriction on entry of cotton and manmade fiber textile products manufactured or produced in Haiti

There is published below a directive of April 25, 1980, received by the Commissioner of Customs from the chairman, Committee for the Implementation of Textile Agreements, concerning restriction on entry of cotton and manmade fiber textile products in certain categories manufactured or produced in Haiti.

This directive was published in the Federal Register on April 30, 1980 (45 F.R. 28792) by the committee.

(QUO-2-1)

Dated: June 11, 1980.

WILLIAM D. SLYNE
(For Chester R. Krayton, Director,
Duty Assessment Division).

U.S. DEPARTMENT OF COMMERCE,
INTERNATIONAL TRADE ADMINISTRATION,
Washington, D.C., April 25, 1980.

Committee for the Implementation of Textile Agreements

COMMISSIONER OF CUSTOMS,
Department of the Treasury,
Washington, D.C.

DEAR MR. COMMISSIONER: Under the terms of the Arrangement Regarding International Trade in Textiles done at Geneva on December 20, 1973, as extended December 15, 1977; pursuant to the Bilateral Cotton, Wool and Man-Made Fiber Textile Agreement of August 17, 1979, between the Governments of the United States and Haiti; and in accordance with the provisions of Executive Order 11651 of March 3, 1972, as amended by Executive Order 11951 of January 6, 1977, you are directed to prohibit, effective on May 1, 1980, and for the 12-month period extending through April 30, 1981, entry into the United States for consumption and withdrawal from warehouse for consumption of cotton and manmade fiber textile products in categories 331, 337, 340, 349/649, 632, 635, 637, 651, and 652, produced or manufactured in Haiti, in excess of the following levels of restraint:

Category	*12-month level of restraint*
331	533,429 dozen pairs
337	91,592 dozen
340	112,500 dozen
349/649	1,168,819 dozen
632	1,744,565 dozen pairs
635	139,904 dozen
637	351,643 dozen
651	96,154 dozen
652	500,000 dozen

In carrying out this directive entries of textile products in the foregoing categories which have been exported to the United States prior to May 1, 1980, shall, to the extent of any unfilled balances, be charged against the levels of restraint established for such goods during the 12-month period beginning on May 1, 1979, and extending through April 30, 1980. In the event that the levels of restraint established for that period have been exhausted by previous entries, such goods shall be subject to the levels set forth in this letter.

The levels of restraint set forth above are subject to adjustment pursuant to the provisions of the bilateral agreement of August 17, 1979, between the Governments of the United States and Haiti which provide, in part, that: (1) For the second and third agreement years, each specific limit shall be increased by 7 percent annually, except category 349/649; (2) any specific ceiling may be exceeded in any agreement year by not more than 7 percent of its square yard equivalent total, provided that the amount of the increase is compensated for by an equivalent decrease in one or more specific limits; (3) specific limits may also be increased for carryover and carryforward up to 11 percent of the applicable category limit; and (4) administrative arrangements or adjustments may be made to resolve minor problems arising in the implementation of the agreement. Any appropriate future adjustments under the foregoing provisions of the bilateral agreement will be made to you by letter.

A detailed description of the textile categories in terms of TSUSA numbers was published in the Federal Register on February 28, 1980 (45 F.R. 13172).

In carrying out the above directions, entry into the United States for consumption shall be construed to include entry for consumption into the Commonwealth of Puerto Rico.

The actions taken with respect to the Government of Haiti and with respect to imports of cotton and manmade fiber textile products from Haiti have been determined by the Committee for the Implementation of Textile Agreements to involve foreign affairs functions of the United States. Therefore, the directions to the Commissioner of Customs, which are necessary for the implementation of such actions, fall within the foreign affairs exception to the rulemaking provisions of 5 U.S.C. 553. This letter will be published in the Federal Register.

Sincerely,

PAUL T. O'DAY,
Chairman, Committee for the Implementation of Textile Agreements.

(T.D. 80–166)

Cotton and Manmade Fiber Textile Products—Restriction on Entry

Restriction on entry of cotton and manmade fiber textile products manufactured or produced in Poland

There are published below directives of April 11 and May 6, 1980, received by the Commissioner of Customs from the chairman, Committee for the Implementation of Textile Agreements, concerning

restriction on entry of cotton and manmade fiber textile products in categories 369 and 634 manufactured or produced in Poland. These directives amend, but do not cancel, that committee's directive of December 20, 1979 (T.D. 80-61).

These directives were published in the Federal Register on April 16 and May 9, 1980 (45 F.R. 25857 and 45 F.R. 30666, respectively), by the committee.

(QUO-2-1)

Dated: June 11, 1980.

WILLIAM D. SYLNE
(For Chester R. Krayton, Director,
Duty Assessment Division).

U.S. DEPARTMENT OF COMMERCE,
INTERNATIONAL TRADE ADMINISTRATION,
Washington, D.C., April 11, 1980.

Committee for the Implementation of Textile Agreements

COMMISSIONER OF CUSTOMS,
Department of the Treasury,
Washington, D.C.

DEAR MR. COMMISSIONER: This directive amends, but does not cancel, the directive issued to you on December 20, 1979, by the chairman, Committee for the Implementation of Textile Agreements, concerning imports into the United States of certain cotton, wool, and manmade fiber textile products, produced or manufactured in Poland.

Under the terms of the Arrangement Regarding International Trade in Textiles done at Geneva on December 20, 1973, as extended on December 15, 1977; pursuant to the Bilateral Cotton, Wool and Man-Made Fiber Textile Agreement of January 9 and 21, 1978, as amended, between the Governments of the United States and the Polish People's Republic; and in accordance with the provisions of Executive Order 11651 of March 3, 1972, as amended by Executive Order 11951 of January 6, 1977, you are directed to prohibit, effective on April 11, 1980, for the 12-month period beginning on January 1, 1980, and extending through December 31, 1980, entry into the United States for consumption and withdrawal from warehouse for consumption of cotton textile products in category 369, produced or manufactured in Poland in excess of an amended level of restraint of 683,124 pounds.[1]

[1] The level of restraint has not been adjusted to reflect any imports after Dec. 31, 1979.

The action taken with respect to the Government of the Polish People's Republic and with respect to imports of cotton textile products from Poland has been determined by the Committee for the Implementation of Textile Agreements to involve foreign affairs functions of the United States. Therefore, the directions to the Commissioner of Customs, which are necessary for the implementation of such actions, fall within the foreign affairs exception to the rulemaking provisions of 5 U.S.C. 553. This letter will be published in the Federal Register.

Sincerely,

PAUL T. O'DAY,
Chairman, Committee for the Implementation of Textile Agreements.

U.S. DEPARTMENT OF COMMERCE,
INTERNATIONAL TRADE ADMINISTRATION,
Washington D.C., May 6, 1980.

Committee for the Implementation of Textile Agreements

COMMISSIONER OF CUSTOMS,
Department of the Treasury,
Washington, D.C.

DEAR MR. COMMISSIONER: This directive amends, but does not cancel, the directive of December 20, 1979, from the chairman of the Committee for the Implementation of Textile Agreements, concerning imports into the United States of certain cotton, wool, and manmade fiber textile products, produced or manufactured in Poland.

Under the terms of the Arrangement Regarding International Trade in Textiles done at Geneva on December 20, 1973, as extended on December 15, 1977; pursuant to the Bilateral Cotton, Wool and Man-Made Fiber Textile Agreement of January 6 and January 25, 1978, as amended, between the Governments of the United States and the Polish People's Republic; and in accordance with the provisions of Executive Order 11651 of March 3, 1972, as amended by Executive Order 11951 of January 6, 1977, you are directed to prohibit, effective on May 12, 1980, and for the 12-month period beginning on January 1, 1980, and extending through December 31, 1980, entry into the United States for consumption and withdrawal from warehouse for consumption of manmade fiber textile products in category 634 and its sublimits, produced or manufactured in Poland, in excess of the following levels of restraint:

322-274 O - 80 - 3

Category	*12-month level of restraint* [1]
634	114,264 dozen of which not more than 84,746 dozen shall be in TSUSA Nos. 380.-0405, 380.8101, 380.8106, 380.8109, 380.8112, and 791.7460, and not more than 36,320 dozen shall be in TSUSA Nos. 376.-5609, 380.0445, 380.5167, 380.5169, 380.8410, 380.-8416, 380.8418, 380.8419, and 791.7471.

In carrying out this directive entries of textile products in the foregoing category and its sublimits, which have been exported to the United States prior to January 1, 1980, shall, to the extent of any unfilled balances, be charged against the levels of restraint established for such goods during the 12-month period which began on January 1, 1979, and extended through December 31, 1979. In the event that the levels of restraint established for that period have been exhausted by previous entries, such goods shall be subject to the levels set forth in this letter.

Textile products in category 634 which have been released from the custody of the U.S. Customs Service under the provisions of 19 U.S.C. 1448(b) or 1484(a)(1)(A) prior to the effective date of this directive shall not be denied entry under this directive.

The actions taken with respect to the Government of the Polish People's Republic and with respect to imports of manmade fiber textile products from Poland have been determined by the Committee for the Implementation of Textile Agreements to involve foreign affairs functions of the United States. Therefore, the directions to the Commissioner of Customs, which are necessary for the implementation of such actions, fall within the foreign affairs exception to the rulemaking provisions of 5 U.S.C. 553. This letter will be published in the Federal Register.

Sincerely.

PAUL T. O'DAY,
Chairman, Committee for the Implementation of Textile Agreements.

[1] The levels of restraint have not been adjusted to reflect any imports after Dec. 31, 1979.

(T.D. 80–167)

Cotton Textile Products—Restriction on Entry

Restriction on entry of cotton textile products manufactured or produced in Pakistan

There is published below a directive of April 30, 1980, received by the Commissioner of Customs from the chairman, Committee for the Implementation of Textile Agreements, concerning restriction on entry of cotton textile products in category 339 manufactured or produced in Pakistan. This directive amends, but does not cancel, that committee's directive of December 20, 1979 (T.D. 80–60).

This directive was published in the Federal Register on May 6, 1980 (45 F.R. 29876), by the committee.

(QUO–2–1)

Dated: June 11, 1980.

WILLIAM D. SLYNE
(For Chester R. Krayton, Director,
Duty Assessment Division).

U.S. DEPARTMENT OF COMMERCE,
INTERNATIONAL TRADE ADMINISTRATION,
Washington, D.C., April 30, 1980.

Committee for the Implementation of Textile Agreements

COMMISSIONER OF CUSTOMS,
Department of the Treasury,
Washington, D.C.

DEAR MR. COMMISSIONER: This directive amends, but does not cancel, the directive of December 20, 1979, from the chairman, Committee for the Implementation of Textile Agreements, concerning imports into the United States of certain cotton textile products, produced or manufactured in Pakistan.

Under the terms of the Arrangement Regarding International Trade in Textiles done at Geneva on December 20, 1973, as extended on December 15, 1977; pursuant to the Bilateral Cotton Textile Agreement of January 4 and 9, 1978, as amended between the Governments of the United States and Pakistan; and in accordance with the provisions of Executive Order 11651 of March 3, 1972, as amended by Executive Order 11951 of January 6, 1977, you are directed to prohibit,

effective on May 6, 1980, and for the 12-month period beginning on January 1, 1980, and extending through December 31, 1980, entry into the United States for consumption and withdrawal from warehouse for consumption of cotton textile products in category 339, produced or manufactured in Pakistan, in excess of the following level of restraint:

Category	*12-month level of restraint* [1]
339	397,535 dozen of which not more than 139,773 dozen shall be in TSUSA Nos. 382.0669 and 382.0671

Textile products in category 339 which have been exported prior to January 1, 1980, shall not be subject to this directive.

The action taken with respect to the Government of Pakistan and with respect to imports of cotton textile products from Pakistan has been determined by the Committee for the Implementation of Textile Agreements to involve foreign affairs functions of the United States. Therefore, the directions to the Commissioner of Customs, which are necessary for the implementation of such actions, fall within the foreign affairs exception to the rulemaking provisions of 5 U.S.C. 553. This letter will be published in the Federal Register.

Sincerely,

PAUL T. O'DAY,
Chairman, Committee for the Implementation of Textile Agreements.

(T.D. 80-168)

Cotton Textile Products—Restriction on Entry

Restriction on entry of cotton textile products manufactured or produced in India

There is published below a directive of May 23, 1980, received by the Commissioner of Customs from the chairman, Committee for the Implementation of Textile Agreements, concerning restriction on entry of cotton textile products in category 342 manufactured or produced in India. This directive amends, but does not cancel, that committee's directive of December 21, 1979 (T.D. 80-58).

[1] The level of restraint has not been adjusted to reflect any imports after Dec. 31, 1979.

This directive was published in the Federal Register on May 29, 1980 (45 F.R. 36107), by the committee.

(QUO-2-1)

Dated: June 11, 1980.

WILLIAM D. SLYNE
(For Chester R. Krayton, Director,
Duty Assessment Division).

U.S. DEPARTMENT OF COMMERCE,
INTERNATIONAL TRADE ADMINISTRATION,
Washington, D.C., May 23, 1980.

Committee for the Implementation of Textile Agreements

COMMISSIONER OF CUSTOMS,
Department of the Treasury,
Washington, D.C.

DEAR MR. COMMISSIONER: This directive amends, but does not cancel, the directive issued to you on December 21, 1979 by the chairman of the Committee for the Implementation of Textile Agreements concerning imports into the United States of certain cotton, wool, and manmade fiber textile products, produced or manufactured in India.

Under the terms of the Arrangement Regarding International Trade in Textiles done at Geneva on December 20, 1973, as extended on December 15, 1977; pursuant to the Bilateral Cotton, Wool and Man-Made Fiber Textile Agreement of December 30, 1977, as amended between the Governments of the United States and India; and in accordance with the provisions of Executive Order 11651 of March 3, 1972, as amended by Executive Order 11951 of January 6, 1977, you are directed to prohibit, effective on May 23, 1980, and for the 12-month period beginning on January 1, 1980, and extending through December 31, 1980, entry into the United States for consumption and withdrawal from warehouse for consumption of cotton textile products in category 342, produced or manufactured in India in excess of 98,315 dozen.[1]

The action taken with respect to the Government of India and with respect to imports of cotton textile products from India has been determined by the Committee for the Implementation of Textile Agreements to involve foreign affairs functions to the United States.

---

[1] The level of restraint has not been adjusted to reflect any imports after Dec. 31, 1979.

Therefore, the directions to the Commissioner of Customs, which are necessary for the implementation of such actions, fall within the foreign affairs functions to the rulemaking provisions of 5 U.S.C. 553. This letter will be published in the Federal Register.

Sincerely,

PAUL T. O'DAY,
Chairman, Committee for the Implementation of Textile Agreements.

(T.D. 80–169)

Cotton and Manmade Fiber Textile Products—Restriction on Entry

Restriction on entry of cotton and manmade fiber textile products manufactured or produced in the People's Republic of China

There is published below a directive of May 19, 1980, received by the Commissioner of Customs from the chairman, Committee for the Implementation of Textile Agreements, concerning restriction on entry of cotton and manmade fiber textile products in certain categories manufactured or produced in the People's Republic of China.

This directive was published in the Federal Register on May 21, 1980 (45 F.R. 34030), by the committee.

(QUO-2-1)

Dated: June 11, 1980.

WILLIAM D. SLYNE
(For Chester R. Krayton, Director,
Duty Assessment Division).

U.S. DEPARTMENT OF COMMERCE,
INTERNATIONAL TRADE ADMINISTRATION,
Washington, D.C., May 19, 1980.

Committee for the Implementation of Textile Agreements

COMMISSIONER OF CUSTOMS,
Department of the Treasury,
Washington, D.C.

DEAR MR. COMMISSIONER: Under the terms of section 204 of the Agricultural Act of 1956, as amended, and in accordance with the provisions of Executive Order 11651 of March 3, 1972, as amended by Executive Order 11951 of January 6, 1977, you are directed to prohibit, effective on May 31, 1980, and for the 12-month period extend-

ing through May 30, 1981, entry into the United States for consumption and withdrawal from warehouse for consumption of cotton and manmade fiber textile products in categories 331, 339, 340, 347/348, and 645/646, produced or manufactured in the People's Republic of China, in excess of the following levels of restraint:

Category	*12-Month Level of Restraint*
331	2, 946, 006 dozen pairs
339	535, 659 dozen
340	354, 613 dozen
347/348	1, 088, 632 dozen
645/646	334, 834 dozen

Cotton and manmade fiber textile products in the foregoing categories that have been exported before, as well as on and after, May 31, 1980, shall be subject to this directive.

A detailed description of the textile categories in terms of TSUSA numbers was published in the Federal Register on February 28, 1980 (45 F.R. 13172), as amended on April 23, 1980 (45 F.R. 27463).

In carrying out the above directions, entry into the United States for consumption shall be construed to include entry for consumption into the Commonwealth of Puerto Rico.

The actions taken with respect to the Government of the People's Republic of China and with respect to imports of cotton and manmade fiber textile products from China have been determined by the Committee for the Implementation of Textile Agreements to involve foreign affairs functions of the United States. Therefore, the directions to the Commissioner of Customs, which are necessary for the implementation of such actions, fall within the foreign affairs exception to the rulemaking provisions of 5 U.S.C. 553. This letter will be published in the Federal Register.

Sincerely,

PAUL T. O'DAY,
Chairman, Committee for the Implementation of Textile Agreements.

(T.D. 80–170)

Cotton Textile Products—Restriction on Entry

Restriction on entry of cotton textile products manufactured or produced in Pakistan

There is published below a directive of March 25, 1980, received by the Commissioner of Customs from the chairman, Committee for the

Implementation of Textile Agreements, concerning visa and exempt certification requirements for cotton textile products manufactured or produced in Pakistan. This directive further amends, but does not cancel, that committee's directive of June 28, 1972 (T.D. 72–208).

This directive was published in the Federal Register on March 28, 1980 (45 F.R. 20518), by the committee.

(QUO–2–1)

Dated: June 11, 1980.

WILLIAM D. SLYNE
(For Chester R. Krayton, Director,
Duty Assessment Division).

U.S. DEPARTMENT OF COMMERCE,
INTERNATIONAL TRADE ADMINISTRATION,
Washington, D.C., March 25, 1980.

Committee for the Implementation of Textile Agreements

COMMISSIONER OF CUSTOMS,
Department of the Treasury,
Washington, D.C.

DEAR MR. COMMISSIONER: This directive further amends, but does not cancel, the directive of June 28, 1972, from the chairman, Committee for the Implementation of Textile Agreements, that directed you to prohibit entry into the United States for consumption and withdrawal from warehouse for consumption of cotton textiles and cotton textile products in categories 1 through 64, produced or manufactured in Pakistan, for which the Government of Pakistan had not issued an export visa or certification for exemption, where appropriate. It also amends, but does not cancel, the directives of March 3, October 7, and November 19, 1976, and July 7, and November 25, 1977, which named Government of Pakistan officials authorized to issue export visas and certifications for exempt textile products.

Under the terms of the Arrangement Regarding International Trade in Textile, done at Geneva on December 20, 1973, as extended on December 15, 1977; pursuant to the Bilateral Cotton Textile Agreement of January 4 and 9, 1978, as amended, between the Governments of the United States and Pakistan, and in accordance with the provisions of Executive Order 11651 of March 3, 1972, as amended by Executive Order 11951 of January 6, 1977 the aforesaid directives are further amended, effective on March 28, 1980, to revise the lists of officials, who are authorized to issue export visas and exempt certifications for cotton textile products, produced or manufactured in

Pakistan. Complete lists of the officials currently authorized to issue visas and certifications are enclosed. Merchandise certified by officials previously designated shall not be denied entry.

The actions taken with respect to the Government of Pakistan and with respect to imports of cotton textiles and cotton textile products from Pakistan have been determined by the Committee for the Implementation of Textile Agreements to involve foreign affairs function of the United States. Therefore, these directions to the Commissioner of Customs, being necessary to the implementation of such actions, fall within the foreign affairs exception to the rulemaking provisions of 5 U.S.C. 533. This letter will be published in the Federal Register.

Sincerely,

PAUL T. O'DAY,
Chairman, Committee for the Implementation of Textile Agreements.

Enclosure.

GOVERNMENT OF PAKISTAN OFFICIALS AUTHORIZED TO ISSUE EXPORT VISAS FOR COTTON TEXTILE PRODUCTS EXPORTED TO THE UNITED STATES

Riaz Ahmad
Ejaz Ahmad
Shabbir Ahmad
Monhammad Akhtar Alam
S. M. Anwar
S. A. Aziz
S. Asif Ali Bokhari
Moinul Hasan
Pir Monhammad Khan
Ghulam Mustafa
Sajjad Hussain Naqvi
Tariq Iqbal Puri
Abdul Ghaffar Quereshi
Mujib-ur-Rehman
Asif Ali Shaikh
Niamat Shah
I. H. Siddiqi
M. Adil Siddiqui
S. A. Zaidi
Abdul Aziz Zia

GOVERNMENT OF PAKISTAN OFFICIALS AUTHORIZED TO ISSUE CERTIFICATIONS FOR EXEMPT COTTON TEXTILE PRODUCTS EXPORTED TO THE UNITED STATES

S. Zaheer Abbas
Iftikhar Ali
S. A. Aziz
S. Asif Ali Bokhari
Mohammad Sadiq Khan
Abdul Aziz Zia

322-274 O - 80 - 4

(T.D. 80-171)

Foreign Currencies—Daily Rates For Countries Not on Quarterly List

Rates of exchange based on rates certified to the Secretary of the Treasury by the Federal Reserve Bank of New York for the Brazil cruzeiro, People's Republic of China yuan, Hong Kong dollar, Iran rial, Philippines peso, Singapore dollar, Thailand baht (tical), and Venezuela bolivar

The Federal Reserve Bank of New York, pursuant to section 522(c), Tariff Act of 1930, as amended (31 U.S.C. 372(c)), has certified buying rates for the dates and foreign currencies shown below. The rates of exchange, based on these buying rates, are published for the information and use of Customs officers and others concerned pursuant to part 159, subpart C, Customs Regulations (19 CFR 159, subpart C).

Brazil cruzeiro:	
June 2–6, 1980	$0.0197
People's Republic of China yuan:	
June 2–5, 1980	$0.674536
June 6, 1980	.677920
Hong Kong dollar:	
June 2, 1980	$0.203770
June 3, 1980	.203583
June 4, 1980	.203252
June 5, 1980	.202840
June 6, 1980	.203417
Iran rial:	
June 2–6, 1980	Not available
Philippines peso:	
June 2–6, 1980	$0.1345
Singapore dollar:	
June 2, 1980	$0.468055
June 3, 1980	.467071
June 4, 1980	.468823
June 5, 1980	.468933
June 6, 1980	.467946
Thailand baht (tical):	
June 2–6, 1980	$0.0490

Venezuela bolivar:

June 2–6, 1980	$0.2329

(LIQ-3-TRODE)

Dated: June 16, 1980.

G. SCOTT SHREVE
(For Chester R. Krayton, Director,
Duty Assessment Division).

(T.D. 80-172)

Foreign Currencies—Variances From Quarterly Rate

Rates of exchange based upon rates certified to the Secretary of the Treasury by the Federal Reserve Bank of New York

The following rates of exchange are based upon rates certified to the Secretary of the Treasury by the Federal Reserve Bank of New York, pursuant to section 522(c), Tariff Act of 1930, as amended (31 U.S.C. 372(c)), and reflect variances of 5 per centum or more from the quarterly rate published in T.D. 80-103 for the following countries. Therefore, as to entries covering merchandise exported on the dates listed, whenever it is necessary for Customs purposes to convert such currency into currency of the United States, conversion shall be at the following rates:

Australia dollar:	
June 2, 1980	$1.1465
June 3, 1980	1.1430
June 4, 1980	1.1440
June 5, 1980	1.1448
June 6, 1980	1.1480
Austria, schilling:	
June 2, 1980	$0.078989
June 3, 1980	.078740
June 4, 1980	.078802
June 5, 1980	.078927
June 6, 1980	.079051
Belgium franc:	
June 2, 1980	$0.035100
June 3, 1980	.035174
June 4–5, 1980	.035199
June 6, 1980	.035236

Denmark krone:	
June 2, 1980	$0. 180522
June 3, 1980	. 180865
June 4, 1980	. 180766
June 5, 1980	. 180914
June 6, 1980	. 181094
Finland markka:	
June 2–5, 1980	$0. 273336
June 6, 1980	. 273598
France franc:	
June 2, 1980	$0. 241255
June 3, 1980	. 241080
June 4, 1980	. 241692
June 5, 1980	. 241926
June 6, 1980	. 242483
Germany deutsche mark:	
June 2, 1980	$0. 560915
June 3, 1980	. 563285
June 4, 1980	. 563761
June 5, 1980	. 563444
June 6, 1980	. 564462
India rupee:	
June 2, 1980	$0. 1290
June 3, 1980	. 1287
June 4, 1980	([1])
June 5–6, 1980	. 1272
Ireland pound:	
June 2, 1980	$2. 0940
June 3, 1980	2. 0875
June 4, 1980	2. 0980
June 5, 1980	2. 0970
June 6, 1980	2. 0975
Italy lira:	
June 2, 1980	$0. 001195
June 3, 1980	. 001197
June 4, 1980	. 001199
June 5, 1980	. 001195
June 6, 1980	. 001201

[1] Rate did not vary this date. Use quarterly rate.

Japan yen:	
June 2, 1980	$0.004473
June 3, 1980	.004490
June 4, 1980	.004517
June 5, 1980	.004538
June 6, 1980	.004560
Malaysia dollar:	
June 2, 1980	$0.461681
June 3, 1980	.462535
June 4, 1980	.463392
June 5, 1980	.464145
June 6, 1980	.465116
Netherlands guilder:	
June 2, 1980	$0.509944
June 3, 1980	.512085
June 4, 1980	.513084
June 5, 1980	.512689
June 6, 1980	.513479
New Zealand dollar:	
June 2, 1980	$0.9875
June 3, 1980	.9810
June 4, 1980	.9815
June 5, 1980	.9860
June 6, 1980	.9855
Norway krone:	
June 2, 1980	$0.205550
June 3, 1980	.205444
June 4, 1980	.205592
June 5, 1980	.205086
June 6, 1980	.205719
Portugal escudo:	
June 2, 1980	$0.020458
June 3, 1980	.020346
June 4–6, 1980	.020408
Spain peseta:	
June 2, 1980	$0.014372
June 3, 1980	.014282
June 4, 1980	.014278
June 5, 1980	.014327
June 6, 1980	.014333

Sweden krona:	
June 2, 1980	$0.238152
June 3, 1980	.238692
June 4, 1980	.238806
June 5, 1980	.239464
June 6, 1980	.239636
Switzerland franc:	
June 2, 1980	$0.602337
June 3, 1980	.604595
June 4, 1980	.607165
June 5, 1980	.606796
June 6, 1980	.611621
United Kingdom pound:	
June 2, 1980	$2.3365
June 3, 1980	2.3030
June 4, 1980	2.3215
June 5, 1980	2.3305
June 6, 1980	2.3318

(LIQ-3-TRODE)

Dated: June 16, 1980.

G. SCOTT SHREVE
(For Chester R. Krayton,
Duty Assessment Division).

(T.D. 80-173)

Customs Bonds

General bond for smelting and refining warehouses, revised

AGENCY: U.S. Customs Service, Department of the Treasury.

ACTION: General notice.

SUMMARY: This notice informs proprietors of Customs bonded smelting and refining warehouses and their sureties of amendment of the General Bond for Smelting and Refining Warehouses. This bond relates to the entry, warehousing, smelting, and refining of imported metal bearing materials in bond without the payment of duty as provided in section 312, Tariff Act of 1930, as amended. The amendment is required to reflect statutory changes in the Customs laws made by the Customs Procedural Reform and Simplification Act of 1978 (Public Law 95-410), which became law on October 3, 1978.

EFFECTIVE DATE: The revised form of the bond is effective upon the date of publication in the Federal Register.

FOR FURTHER INFORMATION CONTACT: William Lawlor, Drawback and Bonds Branch, Carriers, Drawback and Bonds Division, U.S. Customs Service, 1301 Constitution Avenue NW., Washington, D.C. 20229; 202-566-5856.

SUPPLEMENTARY INFORMATION:

BACKGROUND

Section 312(a), Tariff Act of 1930, as amended, provides in part that any plant engaged in smelting or refining, or both, of metal-bearing materials as defined in that section may, upon the giving of satisfactory bond, be designated a bonded smelting or refining warehouse. Metal-bearing materials may be entered into a bonded smelting or refining warehouse without the payment of duties thereon and there smelted or refined, or both, together with metal-bearing materials of domestic or foreign origin. Section 623(b), Tariff Act of 1930, as amended, provides in part that whenever a bond is required or authorized by a law which the Secretary of the Treasury or the Customs Service is authorized to enforce, the Secretary of the Treasury may prescribe the conditions and form of such bond. The form of the General Bond for Smelting and Refining Warehouses now prescribed is published in T.D. 72-244, effective September 15, 1972.

The bond as now prescribed includes provisions and conditions relating to the entry and warehousing of merchandise. The Customs Procedural Reform and Simplification Act of 1978 (Public Law 95-410, 92 Stat. 888, the act) changed Customs entry procedures and extended the warehousing period.

Section 484(a), Tariff Act of 1930, as amended, formerly required that entry documents be filed at a customhouse within 5 working days after the entry of the importing vessel or aircraft, report of the vehicle, or arrival at the port of destination in the case of merchandise transported in bond, unless a longer time was authorized.

Section 102 of the act amended section 484(a) by providing that entry shall be made by filing that documentation necessary to enable Customs to determine whether the merchandise may be released from Customs custody. Section 102 also provides that documentation necessary to classify and appraise merchandise and to verify statistical information shall be filed at the time prescribed by regulation, either when entry is made, or at any time within 10 working days thereafter.

Sections 557 and 559, Tariff Act of 1930, as amended, formerly permitted merchandise to be kept in a Customs bonded warehouse at the owner's expense for a period up to 3 years after arrival of the merchandise in the United States.

Section 108 of the act amends sections 557 and 559 to permit merchandise to remain in a Customs bonded warehouse at the owner's expense for a period up to 5 years. Merchandise in a bonded warehouse on October 3, 1978, the date of enactment of Public Law 95–410, may remain in the warehouse for a period up to 5 years from that date.

A complete text of the bond form, as revised, is set forth below.

ACTION

The revised form of the General Bond for Smelting and Refining Warehouses, as set forth below, is effective upon the date of publication in the Federal Register. However, to minimize any possible inconvenience to the public, the bond format prescribed in T.D. 72–244 with the attachment of Customs bond rider "R" will be accepted for a period of 60 days from the date of publication of the revised form in the Federal Register.

INAPPLICABILITY OF PUBLIC NOTICE AND DELAYED EFFECTIVE DATE PROVISIONS

This is a technical amendment of interest to an extremely small segment of the public. Since it merely implements a statutory requirement, relieves the proprietor of modifying the existing bond form and submitting bond rider "R", notice and public procedure pursuant to 5 U.S.C. 553(b)(B) are unnecessary. In accordance with 5 U.S.C. (d)(1), a delayed effective date is not required because this amendment relieves a restriction.

DRAFTING INFORMATION

The author of this document is William Lawlor, Carriers, Drawback and Bonds Division, Office of Regulations and Rulings, U.S. Customs Service.

R. E. CHASEN,
Commissioner of Customs.

U.S. CUSTOMS SERVICE GENERAL BOND FOR SMELTING AND REFINING WAREHOUSES

Know all men by these presents, That_____, of_____ _____, as principal, and_____ of _____, and _____, of _____ as sureties, are held and firmly bound unto the United States of America in the sum of _____ dollars ($____), for the payment of which we bind ourselves, our heirs, executors, administrators, successors, and assigns, jointly and severally, firmly by these presents.

Witness our hands and seals this _____ day of _____, 19__.

Whereas, the said _____ have (has) been authorized to smelt or refine, or both, imported metal bearing materials in bond without the payment of duty thereon, as provided in section 312, Tariff Act of 1930, as amended, in the premises situated at _____ ____, and more particularly described by metes and bounds in exhibit _____, attached hereto and made a part hereof, which premises are owned, controlled and operated by _____; and

Whereas, metal-bearing materials will be entered for warehouse to be smelted or refined, or both; and

Whereas, metal-bearing materials as well as merchandise generally will be entered for consumption or for warehouse, and in warehouses of classes 2, 3, or 4 at any of the following ports of entry_____

_____

_____

_____:

and

Whereas, certain merchandise, in whole or in part, may be entered under the provisions of section 484, Tariff Act of 1930, as amended, and duties deposited under the provisions of section 505(a), Tariff Act of 1930, as amended; and

Whereas, pursuant to the regulations promulgated under section 448(b), Tariff Act of 1930, the said principal may find that immediate delivery of the merchandise will be necessary and desires the release of such merchandise prior to the making of formal entry therefor and payment of duties thereon the description of the articles to be fully set forth in such applications for special permits as may be filed by the principal; and

Whereas, imported merchandise generally and dutiable metal-bearing materials (including products partly smelted or refined) will, to the extent permitted by law and regulations and in accordance therewith, be transferred from one warehouse to another, or be withdrawn for consumption, for transportation and rewarehousing, for exportation, for transportation and exportation, or for any other purpose provided for by law and regulations, as shown in the required documents.

Whereas, the above-bounden principal may request that the merchandise be examined elsewhere than at the public store, wharf, or other place in charge of a Customs officer;

Now, therefore, the condition of this obligation is such, that—

(1) If the said principal shall comply in all respects with the provisions of section 312, Tariff Act of 1930, as amended, and the regulations thereunder, and all other laws and regulations, relating to the importation, transportation, exportation, transportation and exportation, entry, transfer, warehousing, or rewarehousing of imported metal-bearing materials entered for smelting or refining, or both, and

to the custody and safekeeping of an accounting for such metal-bearing materials and dutiable metal (including products partly smelted or refined); and shall exonerate and hold harmless the United States and its officers from or on account of any risk, loss, or expense of any kind or description connected with or arising from the deposit of metal-bearing materials or dutiable metal (including products partly smelted or refined) in the above-described warehouse(s), including the expenses of any kind of description incident to or caused by the transfer of such merchandise from the said warehouse(s) upon the discontinuance thereof;

(2)(a) If, where entry is made pursuant to section 484, Tariff Act of 1930, as amended, the above-bounden principal, within the time prescribed in the Customs regulations shall file with the appropriate Customs officer the documentation required by the Customs regulations to enable Customs to (1) determine whether the merchandise may be released from Customs custody, (2) properly assess duties on the merchandise, (3) collect accurate statistics with respect to the merchandise, and (4) determine whether applicable requirements of law or regulation are met; and if the above-bounden principal, within the time prescribed in the Customs regulations, shall deposit the duties and taxes imposed upon or by reason of importation estimated to be due thereon; or if, in the event of failure to file the documentation or to deposit duties and taxes, he shall pay to the district director of Customs as liquidated damages an amount equal to the value of the merchandise as to which there shall have been default, plus the duties and taxes thereon (it being understood and agreed that the amount to be collected shall be based upon the quantity and value of the merchandise as determined by the district director, and that the decision of the district director as to the status of the merchandise, whether free or dutiable, together with the rate and amount of duties and taxes, also shall be binding on all parties to this obligation);

(2)(b) If, in cases where the merchandise has been released prior to entry pursuant to section 448(b) of the Tariff Act of 1930, the above-bounden principal within the time prescribed by the Customs Regulations, after the release of the articles described in the application for a special permit, shall make entry for such articles and deposit the duties and taxes imposed upon or by reason of importation estimated to be due thereon, or in case the merchandise is to be entered for warehouse file the usual warehouse entry, or if, in the event of failure to make entry or to deposit such duties and taxes, he shall pay to the district director of Customs as liquidated damages an amount equal to the value of the merchandise plus the duties and taxes thereon (it being understood and agreed that the amount to be collected shall be based upon the quantity and value of such merchandise as deter-

mined by the district director of Customs and that the decision of the district director of Customs as to the status of such merchandise, whether free or dutiable, together with the rate and amount of duties and taxes, also shall be binding on all parties to this obligation);

(3) And if the above-bounden principal shall, when the merchandise is to be examined elsewhere than at the public stores, wharf, or other place in charge of a Customs officer, pay any additional expense, including actual expenses of travel and subsistence, but not the salary of the examining officer, and shall hold such merchandise at the place to which it will be removed for examination until the merchandise, shall have been released from Customs custody by the completion of final examination for purposes of appraisement; and, at any time before such release, shall transfer the merchandise to such place as the district director of Customs may direct; and, when the merchandise hase been corded and sealed, shall keep such cords and seals intact until removed by Customs officers; or, in the event of default, shall pay to the district director of Customs an amount equal to the value of the merchandise with respect to which there has been a default (as set forth in the entries therefor), plus the estimated duties and taxes thereon, as determined at the time of entry;

(4) If said principal shall pay monthly to the district director of Customs for the district in which said smelting, refining, or smelting and refining warehouses are located, the compensation of Customs officers on duty at or assigned to such warehouses, including overtime compensation of Customs officers and employees assigned to duty at night or on Sunday or holiday upon a request made by or on behalf of the principal hereon; and

(5) If the said principal shall deliver to the said district director such invoices, declarations of owners or consignees, certificates of origin, certificates of exportation, and other declarations, certificates and documents as may be required by law or regulations in connection with the entry or withdrawal of imported merchandise or the withdrawal of dutiable metal (including products partly smelted or refined), in the form and within the time required by law or regulations, or any lawful extension thereof, or, in default thereof shall pay to the district director of Customs such amounts as liquidated damages as may be demanded by him in accordance with the laws and regulations; and

(6) If the said principal shall redeliver or cause to be redelivered to the order of the district director of Customs on demand by him, in accordance with the law and regulations in effect on the date of the release of the said articles, any and all merchandise found not to comply with the law and regulations governing its admission into the commerce of the United States; and shall redeliver or cause to be

redelivered to the order of the district director of Customs such additional packages or quantities of merchandise as may be desired by Customs pursuant to section 499, Tariff Act of 1930, as amended, for the purpose of examination inspection, or appraisement, upon a demand made on such principal within the time prescribed by the Customs Regulations, and shall on demand made within the time prescribed by the Customs Regulations redeliver or cause to be redelivered to the order of the district director of Customs any of such merchandise for the purpose of marking pursuant to the provisions of section 304, Tariff Act of 1930, as amended; or, in default thereof, shall pay to said district director such amounts as liquidated damages as may be demanded by him in accordance with the law and regulations not exceeding the amount of this obligation, for any breach or breaches thereof;

(7) If the said principal shall not receive into such warehouse(s) any merchandise entered for warehouse or rewarehouse therein without a proper permit from the district director of Customs and without the presence of the Customs officer in charge, and shall not remove or suffer to be removed any such merchandise or dutiable metal (including products partly smelted or refined) not in excess of that charged against open bonds, except in the manner provided for by law and regulations; or, in default thereof, shall pay to the district director of Customs on demand all duties, taxes, charges, and exactions found legally due on the merchandise or dutiable metal (including products partly smelted or refined) so removed it being expressly understood and agreed that the liability of said principal under the bond shall extend to all cases where the merchandise or dutiable metal (including products partly smelted or refined) are lost or stolen from said warehouse(s), whether the loss or theft shall result from the fault of said principal or not; and

(8) If the said principal shall pay to the district director of Customs when demanded, all duties, taxes, and charges found legally due and unpaid on the final liquidation of such consumption entries as may be charged against this obligation; and if within 5 years from October 3, 1978, or 5 years from the date of original importation, whichever is later, the said principal shall pay to the district director of Customs the full amount of duties, taxes, charges, and exactions legally due upon all merchandise and dutiable metal withdrawn from warehouse for domestic consumption, and shall pay, on demand by the district director, any other duties, taxes, charges, and exactions found legally due on the merchandise or dutiable metal (including products partly smelted or refined) after withdrawal, or found to be due on merchandise or dutiable metal (including products partly smelted or refined) remaining in warehouse after expiration of such 5 year period; and

(9) If the said principal shall properly and lawfully enter or withdraw the merchandise or dutiable metal (including products partly smelted or refined) covered by this obligation, for bona fide exportation or for transportation, or for transportation and exportation, and shall actually furnish the district director of Customs with proof that such merchandise, if entered for exportation, was exported through a Customs port of exit under Customs supervision and landed beyond the limits of the United States, or, if entered or withdrawn for transportation to another Customs port, was delivered to the district director of Customs at the port of destination and there properly entered, the proof to be filed in the form and within the time required by law and regulations, or any lawful extension thereof, or, in lieu of exportation, if the merchandise or dutiable metal (including products partly smelted or refined) shall be destroyed or abandoned within the bonded period in accordance with law and regulations, or, in default of the foregoing conditions, if the obligors shall pay to the district director of Customs the full amount of duties, taxes, charges, and exactions which may be found legally due on such of the merchandise as to which there shall have been default;

Then this obligation to be void; otherwise to remain in full force and effect.

Signed, sealed, and delivered in the presence of _____.

_____ (Name)	_____ (Address)	
_____ (Name)	_____ (Address)	_____ (Principal) (SEAL)
_____ (Name)	_____ (Address)	
_____ (Name)	_____ (Address)	_____ (Surety) (SEAL)
_____ (Name)	_____ (Address)	
_____ (Name)	_____ (Address)	_____ (Surety) (SEAL)

[Published in the Federal Register June 24, 1980 (45 F.R. 42433)]

(T.D. 80-174)

Cotton and Manmade Fiber Textile Products—Restriction on Entry

Restriction on entry of cotton and manmade fiber textile products manufactured or produced in the Dominican Republic

There is published below a directive of May 30, 1980, received by the Commissioner of Customs from the chairman, Committee for the Implementation of Textile Agreements, concerning restriction on entry

of cotton and manmade fiber textile products in certain categories manufactured or produced in the Dominican Republic.

This directive was published in the Federal Register on June 4, 1980 (45 F.R. 37716), by the committee.

(QUO-2-1)

Dated: June 11, 1980.

WILLIAM D. SLYNE
(For Chester R. Krayton, Director,
Duty Assessment Division).

U.S. DEPARTMENT OF COMMERCE,
INTERNATIONAL TRADE ADMINISTRATION,
Washington, D.C., May 30, 1980.

Committee for the Implementation of Textile Agreements

COMMISSIONER OF CUSTOMS,
Department of the Treasury,
Washington, D.C.

DEAR MR. COMMISSIONER: Under the terms of the Arrangement Regarding International Trade in Textiles done at Geneva on December 20, 1973, as extended December 15, 1977; pursuant to the Bilateral Cotton, Wool and Man-Made Fiber Textile Agreement of August 7 and 8, 1979, between the Governments of the United States and the Dominican Republic; and in accordance with the provisions of Executive Order 11651 of March 3, 1972, as amended by Executive Order 11951 of January 6, 1977, you are directed to prohibit, effective on June 1, 1980, and for the 12-month period extending through May 31, 1981, entry into the United States for consumption and withdrawal from warehouse for consumption of cotton and manmade fiber textile products in categories 340, 351, 639, and 648, produced or manufactured in the Dominican Republic, in excess of the following levels of restraint:

Category	*12-month level of restraint*
340	121,817 dozen
351	286,113 dozen
639	274,588 dozen
649	1,392,750 dozen

In carrying out this directive entries of textile products in the foregoing categories which have been exported to the United States prior to June 1, 1980, shall, to the extent of any unfilled balances, be

charged against the levels of restraint established for such goods during the 12-month period beginning on June 1, 1979, and extending through May 31, 1980. In the event that the levels of restraint established for that period have been exhausted by previous entries, such goods shall be subject to the levels set forth in this letter.

The levels of restraint set forth above are subject to adjustment pursuant to the provisions of the bilateral agreement of August 7 and 8, 1979, between the Governments of the United States and the Dominican Republic which provide, in part, that: (1) Specific limits may be exceeded by designated percentages to account for swing; (2) specific limits may also be increased for carryover and carryforward up to 11 percent of the applicable category limit; and (3) administrative arrangements or adjustments may be made to resolve minor problems arising in the implementation of the agreement. Any appropriate future adjustments under the foregoing provisions of the bilateral agreement will be made to you by letter.

A detailed description of the textile categories in terms of TSUSA numbers was published in the Federal Register on February 28, 1980 (45 F.R. 13172), as amended on April 23, 1980 (45 F.R. 27463).

In carrying out the above directions, entry into the United States for consumption shall be construed to include entry for consumption into the Commonwealth of Puerto Rico.

The actions taken with respect to the Government of the Dominican Republic with respect to imports of cotton and manmade fiber textile products from the Dominican Republic have been determined by the Committee for the Implementation of Textile Agreements to involve foreign affairs functions of the United States. Therefore, the directions to the Commissioner of Customs, which are necessary for the implementation of such actions, fall within the foreign affairs exception to the rulemaking provisions of 5 U.S.C. 553. This letter will be published in the Federal Register.

Sincerely,

ARTHUR GAREL,
Acting Chairman, Committee for the Implementation of Textile Agreements.

ERRATUM

In CUSTOMS BULLETIN, volume 14, No. 24, dated June 11, 1980, on page 35, please correct the name of the Director, Carriers, Drawback and Bonds Division to read: Alfred G. Scholle.

U.S. Customs Service

General Notice

(521791)

Courier Services; Invitation to the Public to Comment

AGENCY: U.S. Customs Service, Department of the Treasury.

ACTION: Invitation to the public to comment.

SUMMARY: This document gives notice that the Customs Service is inviting comments from interested members of the public concerning Customs handling of importations by courier services. These couriers provide overnight delivery service of articles from overseas. The Customs Service examines and clears shipments imported by courier services. Various segments of the importing community have raised the following questions about the treatment accorded these shipments by Customs: (1) Should the bags or pouches imported by a courier service employee be treated as accompanying baggage of the employee? (2) May a courier service designated as the consignee of merchandise brought or shipped to the United States file a formal or informal entry in its own name? (3) May a courier service which is not the consignee of the merchandise and has not been authorized in writing by the consignee, execute a power of attorney designating a broker to make the entry? Comments are invited with respect to these questions. A question of whether the courier service operations conflict with any law administered by the Postal Service has been referred to that agency.

DATES: Comments (preferably in triplicate) must be received on or before August 18, 1980.

ADDRESS: Comments should be addressed to the Commissioner of Customs, Attention: Regulations and Research Division, 1301 Constitution Avenue NW., Washington, D.C. 20229.

FOR FURTHER INFORMATION CONTACT: Marcia Kaplan, Entry Procedures and Penalties Division, U.S. Customs Service,

1301 Constitution Avenue NW., Washington, D.C. 20229; 202-566-5765.

SUPPLEMENTARY INFORMATION:

BACKGROUND

The Customs Service examines and clears shipments imported by courier services. Courier services provide overnight delivery service of articles from overseas. Generally, couriers import: Intangibles (described in general headnote 5, Tariff Schedules of the United States), commercial drawings or plans, business records, diagrams, and other data. Although intangibles are exempt from entry, the majority of other articles imported by these services are not.

Courier services generally import their shipments in two ways. One is by use of an onboard courier, an individual who brings the articles with him. The other is by use of a cargo courier.

The onboard courier is usually an employee of the courier service who imports the shipment as accompanying baggage, filing a baggage declaration (see 19 CFR 148.23). This courier typically brings in 10 to 15 duffle bags each containing a large number of separately addressed envelopes and parcels. Often there is commingling of both intangibles and other dutiable and nondutiable articles. Articles within the duffle bags or pouches which, under Customs regulations, cannot be cleared on the baggage declaration require the filing of an entry, formal or informal.

The cargo courier, on the other hand, is usually a courier service employee overseas who arranges for an unaccompanied shipment of the articles to a courier service in the United States which is generally named as consignee on the shipping documents. Another courier service employee in the United States, accompanied by a customhouse broker, picks up the shipment on arrival and the broker files the entries, formal and informal, for articles which generally are of the same kind imported by onboard couriers.

QUESTIONS RAISED

In light of the foregoing, members of the importing community have raised the following questions:

(1) Should the bags or pouches imported by onboard couriers be treated as accompanying baggage of the individual courier?

(2) May a courier service designated as the consignee of merchandise brought or shipped to the United States by courier service employees file a formal or informal entry in its own name? (Under 19 U.S.C. 1483, all merchandise imported into the United States is deemed the property of the person to whom that property is consigned.)

(3) May a courier service which is not the consignee of the merchandise and has not been authorized in writing by the consignee, execute a power of attorney designating a broker to make the entry?

These questions have arisen in response to certain problems encountered during the processing of courier sacks, including the inadequacy of passenger processing facilities to clear these sacks at airports, inaccurate or improper documentation or declarations, and commingling of a wide variety of merchandise. It has also been alleged that courier services may be operating in violation of certain laws administered by the U.S. Postal Service. This allegation has been referred to the Postal Service for comment.

COMMENTS INVITED

Comments concerning the questions raised above are invited from interested members of the public. These comments submitted in writing and preferably in triplicate, to the Commissioner of Customs will be available for public inspection in accordance with 19 CFR 103.8(b), during regular business hours at the Regulations and Research Division, Headquarters, Room 2426, U.S. Customs Service, 1301 Constitution Avenue NW., Washington, D.C. 20229.

DRAFTING INFORMATION

The principal author of this notice was Harold I. Loring, Regulations and Research Division, U.S. Customs Service. However, personnel from other offices of the U.S. Customs Service participated in developing this notice, both on matters of style and substance.

WILLIAM T. ARCHEY,
Commissioner of Customs.

Approved: June 12, 1980.
RICHARD J. DAVIS,
Assistant Secretary of the Treasury.

[Published in the Federal Register June 19, 1980 (45 F.R. 41565)]

Decisions of the United States Customs Court

United States Customs Court

One Federal Plaza
New York, N.Y. 10007

Chief Judge

Edward D. Re

Judges

Paul P. Rao
Morgan Ford
Scovel Richardson
Fredrick Landis
James L. Watson
Herbert N. Maletz
Bernard Newman
Nils A. Boe

Senior Judge

Samuel M. Rosenstein

Clerk

Joseph E. Lombardi

Abstracts
Abstracted Protest Decision

DEPARTMENT OF THE TREASURY, *June 9, 1980.*

The following abstracts of decisions of the United States Customs Court at New York are published for the information and guidance of officers of the customs and others concerned. Although the decisions are not of sufficient general interest to print in full, the summary herein will be of assistance to Customs officials in easily locating cases and tracing important facts.

ROBERT E. CHASEN,
Commissioner of Customs.

DECISION NUMBER	JUDGE & DATE OF DECISION	PLAINTIFF	COURT NO.	ASSESSED	HELD	BASIS	PORT OF ENTRY AND MERCHANDISE
				Par. or Item No. and Rate	Par. or Item No. and Rate		
P80/82	Landis, J. June 6, 1980	H. E. Lauffer Co., Inc.	73-9-02702, etc.	Item 533.65 10¢ per doz. pcs. + 55% Item 533.66 10¢ per doz. pcs. + 36%	Item 533.28 5¢ per doz. pcs. + 10.5%	Agreed statement of facts.	New York Ceramicware (stoneware and earthenware)
P80/83	Landis, J. June 6, 1980	Rhodia, Inc.	78-1-00119	Items 423.00/423.96 5%	Item 519.37 0.4¢ per lb.	Judgment on the pleadings	New York Cerox
P80/84	Landis, J. June 6, 1980	Rhodia, Inc.	78-11-01992	Items 423.00/423.96 5%	Item 519.37 0.4¢ per lb.	Judgment on the pleadings	New York Cerox
P80/85	Landis, J. June 6, 1980	Rhodia, Inc.	78-12-02114	Items 423.00/423.96 5%	Item 519.37 0.4¢ per lb.	Judgment on the pleadings	New York Cerox
P80/86	Landis, J. June 6, 1980	Rhodia, Inc.	79-3-00407	Items 423.00/423.96 5%	Item 519.37 0.4¢ per lb.	Judgment on the pleadings	New York Cerox
P80/87	Landis, J. June 6, 1980	Rhodia, Inc.	79-3-00539	Items 423.00/423.96 5%	Item 519.37 0.4¢ per lb.	Judgment on the pleadings	New York Cerox

Decisions of the United States Customs Court

Abstracts

Abstracted Reappraisement Decisions

DECISION NUMBER	JUDGE & DATE OF DECISION	PLAINTIFF	COURT NO.	BASIS OF VALUATION	HELD VALUE	BASIS	PORT OF ENTRY AND MERCHANDISE
R80/170	Landis, J. June 3, 1980	B & K Instruments, Inc.	R66/23374, etc.	Export value	Invoice unit prices less, where applicable, items specified on invoices as saved packing	Agreed statement of facts	Cleveland Instruments and parts
R80/171	Landis, J. June 3, 1980	B & K Instruments, Inc.	R67/10964, etc.	Export value	Invoice unit prices less, where applicable, items specified on invoices as saved packing	Agreed statement of facts	Cleveland Instruments and parts
R80/172	Landis, J. June 3, 1980	B & K Instruments, Inc.	R68/12875, etc.	Export value	Invoice unit prices less, where applicable, items specified on invoices as saved packing	Agreed statement of facts	Cleveland Instruments and parts
R80/173	Landis, J. June 3, 1980	B & K Instruments, Inc.	R69/12706, etc.	Export value	Invoice unit prices less, where applicable, items specified on invoices as saved packing	Agreed statement of facts	Cleveland Instruments and parts

R80/174	Landis, J. June 3, 1980	Manhattan Novelty Corporation	278387-A, etc.	Export value	F.o.b. unit invoice prices plus 20% of difference between f.o.b. unit invoice prices and appraised values	Agreed statement of facts	New York Binoculars and leather cases
R80/175	Landis, J. June 3, 1980	J. C. Penney	R64/13333, etc.	Export value	Appraised unit values less 7.5% net packed	Agreed statement of facts	Seattle Tubing mats
R80/176	Landis, J. June 3, 1980	Radio Corporation of America	R66/26331	United States value	F.o.b. unit invoice prices plus 50%	Agreed statement of facts	San Francisco Electron receiving tubes
R80/177	Landis, J. June 6, 1980	National Silver Co.	R61/1384	Export value	Various appraised unit values less 7.5%, net packed	Agreed statement of facts	Los Angeles Flatware

Appeal to U.S. Court of Customs and Patent Appeals

Appeal 80–31.—National Sugar Refining Company *v.* United States.—Sugar—Increased Duty—Date of Exportation—Presidential Proclamations—Summary Judgment. Appeal from C.D. 4849.

The issue in this case involves Presidential proclamations relating to the duty imposed on sugar imported into the United States under item 155.20, Tariff Schedules of the United States.

On September 21, 1976, Presidential Proclamation 4463, modifying a prior proclamation (Presidential Proclamation 4334), increased the duty on sugar imports. On October 4, 1976, Presidential Proclamation 4466 was issued providing in part that the provisions of Presidential Proclamation 4463 "shall not be effective with respect to articles exported to the United States before 12:01 a.m. (U.S. eastern daylight savings time), September 21, 1976, provided that such articles are entered or withdrawn from warehouse, for consumption on or before November 8, 1976." The increased duty provided by Presidential Proclamation 4463 was imposed on the sugar imported into the United States from the Dominican Republic and entered for consumption on October 22, 1976. Plaintiff-appellant's protest with respect to the imposition of the increased duty was denied by the Customs Service, and an action was instituted in the Customs Court. Upon motion for summary judgment before the court plaintiff alleged that the sugar it had contracted to purchase was fully laden on a charter vessel at the Port of Rio Haina, Dominican Republic, on September 20, 1976; that local restrictions prohibited the vessel carrying the merchandise in question to sail from the port during night hours; and that the vessel bearing the merchandise departed the Port of Rio Haina and the country of the Dominican Republic at 7:30 a.m., local time, on September 21, 1976. Plaintiff contended that the sugar was exported on September 20, 1976, and should be liquidated at the rate established by Presidential Proclamation 4334 of November 16, 1974, and not at the rate actually applied as established by Presidential Proclamation 4463, as amended by Presidential Proclamation 4466. Defendant-appellee cross-moved for summary judgment in its favor contending that the increased duty was proper. Alternatively, defend-

ant contended that a genuine issue existed as to material facts alleged in plaintiff's motion, precluding summary judgment in favor of plaintiff.

In view of the undisputed fact that the vessel carrying the merchandise in question departed the country of exportation at 7:30 a.m., local time, on September 21, 1976, the Customs Court concluded that the involved merchandise was not "exported to the United States before 12:01 a.m. * * * September 21, 1976," within the intendment of Presidential Proclamation 4466 and was, therefore, subject to the additional duty imposed by Presidential Proclamation 4463. Plaintiff's motion for summary judgment was denied and defendant's cross-motion for summary judgment was granted.

It is claimed that: the Customs Court erred in finding and holding that the sugar in question was exported after 12:01 a.m. September 21, 1976; in failing to find and hold that the sugar was exported prior to 12:01 a.m. September 21, 1976, the court erred by not giving proper interpretation to Presidential Proclamation 4466 and its intended relief from hardship; in finding and holding that Presidential Proclamation 4463 applied to the sugar in question, the court erred in not considering the fact that Presidential Proclamation 4463 was not available for general circulation after the sugar had finally departed the country of export; the court erred in finding and holding that the term "export" is the date the goods finally depart the country of exportation.

Recent Unpublished Customs Service Decisions

The following listing of recent administrative decisions issued by the Office of Regulations and Rulings, U.S. Customs Service, and not otherwise published, is published for the information of Customs officers and the importing community. Although the decisions are not of sufficient general interest to warrant publication as Treasury decisions, the listing describes the issues involved and is intended to aid Customs officers and concerned members of the public in identifying matters of interest which recently have been considered by the Office of Regulations and Rulings.

A copy of any decision included in this listing, identified by its date and file number, may be obtained in a form appropriate for public distribution upon written request to the Office of Regulations and Rulings. Attention: Legal Reference Area, room 2404, U.S. Customs Service, 1301 Constitution Avenue NW., Washington, D.C. 20229. These copies will be made available at a cost to the requester of 10 cents per page. However, the Customs Service will waive this charge if the total number of pages copied is 10 or less.

Decisions listed in earlier issues of the CUSTOMS BULLETIN, through December 21, 1979, are available in microfiche format at a cost of $17.70 (15 cents per sheet of fiche). It is anticipated that additions to the microfiche will be made quarterly and subscriptions are available. Requests for the microfiche now available and for subscriptions should be directed to the Legal Reference Area. Subscribers will automatically receive updates as they are issued and will be billed accordingly.

Dated: June 17, 1980.

JOHN T. ROTH,
Acting Director,
Regulations and Research Division.

Date of decision	File No.	Issue
5-15-80	104467	Carrier control: Prohibition against the use of a foreign-flag vessel to land in a U.S. port fish taken on the high seas
5-28-80	104567	Instruments of international traffic: Shipping fixtures used in the transportation of aircraft parts
5-22-80	104608	Vessels: Use of foreign-built vessels on inland river
6- 2-80	542124	Valuation: Whether certain artwork furnished free of charge by a U.S. customer to the foreign manufacturer is a dutiable assist
5-20-80	711484	Country-of-origin marking: Use of sturdy, pressure-sensitive gummed labels
5-15-80	712115	Country-of-origin marking: Exception for handwheels sold to valve manufacturers in original marked containers
5-15-80	712673	Prohibited and restricted importations: Trademark infringement pump top insulated containers with gummed labels bearing infringing language
5- 2-80	712682	Country of origin: Sterling silver jewelry made in Thailand and goldplated in Hong Kong
5-20-80	712877	Prohibited and restricted importations: Trademark infringement: Pump top insulated containers
5- 8-80	060746	Classification: Lace drapery panels (365.50)
5-19-80	060812	Classification: Wood veneer panels (240.34)
5-14-80	061438	American selling price: Men's protective boot (700.60)
5-14-80	061521	Classification: Track shoes (700.35, 700.60)
5-19-80	061835	Classification: Musicalculator (676.20, 688.40)
5-21-80	061858	American selling price: Men's protective boot (700.60)
5-21-80	061938	American selling price: Men's protective boot (700.60)
5- 8-80	061954	American selling price: woman's open-toe, open-back, ankle-strap casual shoe with unit-molded bottom and plastic and suede upper (700.60)
4-25-80	061969	American selling price: Woman's casual shoe (700.60)
5-22-80	061993	Classification: Whether double-needle contrasting stitching on men's short-sleeve dress shirts constitutes ornamentation (380.04, 380.84)
4- 9-80	062908	Classification: Clamp; pipe coupling (610.80, 657.25)
5-14-80	062928	Classification: Swivel snap hook (657.40, 657.80)
5- 1-80	064045	Classification: Diet supplement (407.85, 425.04, 440.00)
4- 9-80	064087	Classification: Knives and knife assemblies for chippers (649.67, 668.00, 668.06)
5- 8-80	064122	Classification: Tire valve extensions (692.32)
5- 8-80	064145	Classification: Rethermalizing ovens; refrigerators; serving carts (661.35, 684.20, 684.50, 727.55)
5- 8-80	064240	Classification: Wester-style headwear (702.12, 702.45, 702.47, 703.05)
4- 9-80	064249	Generalized system of preferences: Substantially transformed constitutent materials (652.80)

Date of decision	File No.	Issue
5- 5-80	064448	Classification: Whether jeans with decorative-appearing, pieced patch pockets and piping inserted in seams and along pocket opening edges are ornamental (380.39)
5-19-80	064509	Classification: Agricultural shade cloth (352.80)
5-19-80	064822	Classification: Window ventilator (744.55)
5-21-80	064920	Classification: Splashguards (774.25, 774.55)
5-21-80	065018	Classification: Plastic compact for carrying eyeshadow (706.60, 772.20)
5- 8-80	065021	American selling price: Protective boot (700.60)

International Trade Commission Notices

Investigations by the U.S. International Trade Commission

DEPARTMENT OF THE TREASURY

The appended notices relating to investigations by the U.S. International Trade Commission are published for the information of Customs officers and others concerned.

R. E. CHASEN,
Commissioner of Customs.

731–TA–26 (Final)

Certain Steel Wire Nails From Korea

AGENCY: U.S. International Trade Commission.

ACTION: Institution of a final antidumping investigation.

SUMMARY: As a result of the affirmative final determination on May 19, 1980, by the International Trade Administration, U.S. Department of Commerce, that certain steel wire nails provided for in items Nos. 646.25 and 646.26 of the Tariff Schedules of the United States (TSUS) from certain Korean companies are being sold in the United States at less than fair value, within the meaning of section 731 of the Tariff Act of 1930 (19 U.S.C. 1673), the U.S. International Trade Commission (hereinafter the Commission) hereby gives notice of the institution of investigation No. 731–TA–26 (final) to determine whether an industry in the United States is materially injured, or is threatened with material injury, or the establishment of an industry in the United States is materially retarded, by reason of imports of such merchandise. For purposes of this investigation, the term "steel wire nails" refers to nails, brads, spikes, staples, and tacks of one-piece construction which are made of round steel wire and which enter the United States under items Nos. 646.25 and 646.26 of the TSUS. The Commission's investigation encompasses imports of nails

as defined above from Korea produced by all firms except those specifically excluded by the Department of Commerce. The excluded firms are Blobcar, Ltd., Dae Bong Industrial, Daeger Trading Co., Daewo Industrial, Dong-A-Nails Co., Jesse Industries, Kang Wan Industries, Lee Chun Steel Co., Ltd., Pacific Chemical Co., Sunkyong, Ltd., and Tong Myung Industries, which were found not to be selling below the applicable trigger price; Daegu Moolsan Co., Ltd., Dae Han Sang Sa Co., Ltd., Jin Heung Iron and Steel Co., Korea Nail Manufacturing Co., Ltd., New Korea Nails Ind., Co., Ltd., and Young Sin Metal Industrial Co., Ltd., which were found not to be selling at less than fair value or found to be selling at less than fair value in de minimis amounts; and Korean nail manufacturers not exporting to the United States, either directly or indirectly, during the period May 1978–March 1979.

EFFECTIVE DATE: May 19, 1980.

FOR ADDITIONAL INFORMATION CONTACT: Mr. Lynn Featherstone, Supervisory Investigator, Office of Operations, U.S. International Trade Commission, room 344, 701 E Street NW., Washington, D.C. 20436; telephone 202–523–1376.

SUPPLEMENTARY INFORMATION: The provisions of the Trade Agreements Act of 1979 (Public Law 96–39, 93 Stat. 144) repealed the Antidumping Act of 1921 and replaced it with subtitle B of title VII of the Tariff Act of 1930 (19 U.S.C. 1673) (hereinafter title VII) effective on January 1, 1980. Before the effective date of title VII, the Department of Treasury made, under the Antidumping Act of 1921, a tentative preliminary but not a final determination, that no imports of steel wire nails from Korea were being sold in the United States at less than fair value. Consequently, pursuant to transition rules set forth in section 102(b)(2) of the Trade Agreements Act of 1979, the investigation was terminated under the Antidumping Act of 1921 and now continues subject to the provisions of title VII, as if the preliminary determination had been made under section 733 of that title on the effective date of title VII.

Section 735(b)(1) of the Tariff Act requires the Commission to make a final injury determination where the administering authority has made an affirmative final determination pursuant to section 735(a) as to whether the merchandise which is the subject of the investigation is being or is likely to be, sold in the United States at less than fair value.

Inasmuch as the preliminary determination by the administering authority was negative and its final determination was affirmative, section 735(b)(3) requires the Commission to make its final injury

determination within 75 days after the date of the affirmative final less-than-fair-value-sale determination.

This investigation will be conducted according to the provisions of part 207 of the Commission's Rules of Practice and Procedure (19 CFR 207, 44 F.R. 76457), subpart C, effective January 1, 1980.

WRITTEN SUBMISSION: Any person may submit a written statement of information pertinent to the subject of this investigation. A signed original and 19 true copies of each submission must be filed at the Office of the Secretary, U.S. International Trade Commission Building, 701 E Street NW., Washington, D.C. 20436, on or before July 15, 1980.

Any submission of business information for which confidential treatment is desired shall be submitted separately from other documents. The envelope and all pages of such submissions must be clearly labeled "Confidential business information." Confidential submissions and requests for confidential treatment must conform with the requirements of section 201.6 of the Commission's Rules of Practice and Procedure (19 CFR 201.6).

All written submissions, except for confidential business data, will be available for inspection by interested persons at the Office of the Secretary in Washington, D.C., and at the Commission's New York Office, 6 World Trade Center, New York, N.Y. 10048.

A staff report containing preliminary findings of fact will be available to all interested parties on June 17, 1980.

HEARING: The Commission will hold a public hearing in connection with this investigation on July 9, 1980. The proceedings will be conducted in the hearing room of the U.S. International Trade Commission Building, 701 E Street NW., Washington, D.C. 20436, and will begin at 10 a.m., e.d.t. Parties desiring to appear at the hearing should notify the Office of the Secretary not later than 5 business days prior to the date of the hearing. In addition, all hearing participants must file written prehearing statements in conformity with section 207.22 of the Commissions Rules of Practice and Procedure (19 CFR 207.22) on or before July 3, 1980.

For further information concerning the conduct of the investigation, hearing procedures, and rules of general application, consult the Commission's Rules of Practice and Procedure, part 207, supbart C (19 CFR 207), and part 201, subparts A through E (19 CFR 201). This notice is published pursuant to section 207.20 of the Commission's Rules of Practice and Procedure (19 CFR 207.20, 44 F.R. 76458).

By order of the Commission.

Issued: June 5, 1980.

KENNETH R. MASON,
Secretary.

In the Matter of CERTAIN TURNING MACHINES AND COMPONENTS THEREOF	Investigation No. 337-TA-72

Notice of Commission Request for Comments Concerning Settlement Agreement

Background.—In connection with the Commission's investigation, under section 337 of the Tariff Act of 1930, of alleged unfair methods of competition and unfair acts in the importation and sale of certain turning machines and components thereof in the United States, the administrative law judge (ALJ) recommended on April 25, 1980, that the Commission grant respondents Tsugami Corp. and REM Sales Inc. motion to terminate this investigation as to them, which was filed with the Commission on March 27, 1980. Copies of the ALJ's recommendation may be obtained by interested persons by contacting the Office of the Secretary to the Commission, 701 E Street NW., Washington, D.C. 20436; telephone 202-523-0161.

This investigation began with a complaint filed by Warner & Swasey on September 13, 1979, alleging infringement of claims 1, 2, 3, 8, 10, 14, 18, 19, 20, and 22 of U.S. reissue patent No. 29,612 by Yamazaki Corp. and Yamazaki Machinery Works, Ltd. Investigation No. 337-TA-72 was instituted on October 1979, based on Warner & Swasey's complaint. Complainant Warner & Swasey moved on November 14, 1979, to amend the complaint and notice of investigation by adding as respondents Tsugami Corp. and REM Sales Inc., which motion was then certified to the Commission. On December 21, 1979, the motion to amend the complaint and notice of investigation was granted by the Commission. Respondents Tsugami and REM moved on January 8, 1980, to extend their time for filing a response to the complaint which motion was granted and response due on March 27, 1980. On March 27, 1980, respondents Tsugami and REM moved for an order to terminate the investigation as it applies to them, and that such motion was in lieu of the response to the complaint. A license agreement had been entered into between respondents Tsugami and REM and complainant dispensing of all outstanding issues between the parties. Complainant filed no opposition to respondents Tsugami's and REM's motion, and the Commission investigative attorney filed a memorandum in support of respondents Tsugami's and REM's motion to terminate.

Written comments requested.—Since respondents Tsugami and REM have filed a motion to terminate this investigation as to them based upon the license agreement, and because complainant has filed no opposition to respondents Tsugami's and REM's motion and the

ALJ has recommended termination on the basis of the license agreement, no oral argument will be held with respect to the ALJ's recommendation. However, in light of the Commission's duty to consider the public interest, the Commission requests written comments from persons concerning the effect of the termination of this investigation as to Tsugami and REM based on the license agreement upon (1) the public health and welfare, (2) competitive conditions in the U.S. economy, (3) the production of like or directly competitive articles in the United States, and (4) U.S. consumers. These written comments must be filed with the Secretary of the Commission no later than 30 days after publication of this notice in the Federal Register. The Commission has also requested comments from Government agencies pursuant to 19 CFR section 210.14(a)(2) on the license agreement, which is disclosable to those agencies under provisions of the protective order covering the investigation.

The license agreement.—The license agreement between complainant Warner & Swasey Co. and respondent Tsugami Corp. was executed by both parties and has an effective date of February 1, 1980. The license agreement disposes of any issues of alleged infringement of the reissue patent in suit by the importation or sale of certain turning machines manufactured by Tsugami Corp. and sold in the United States through REM Sales Inc., thereby leaving no outstanding issues between these parties for adjudication. The license agreement calls for a nonexclusive license which allows the licensor to grant further licenses. In addition, the license agreement provides that the licensee shall be relieved of the obligation to pay royalties under the agreement in the event the reissue patent in suit is declared invalid by a court having final jurisdiction.

Additional information.—The original and 19 true copies of all written submissions must be filed with the Secretary of the Commission. Any person desiring to submit a document (or portions thereof) to the Commission in confidence must request in camera treatment. Such request should be directed to the Secretary of the Commission and must include a full statement of the reasons why the Commission should grant such treatment. The Commission will either accept such submission in confidence or return it. All nonconfidential written submissions will be open to public inspection at the Secretary's Office.

By order of the Commission.

Issued: June 5, 1980.

KENNETH R. MASON,
Secretary.

In the Matter of CERTAIN INCLINED-FIELD ACCELERATION TUBES AND COMPONENTS THEREOF	Investigation No. 337-TA-67

Commission Action and Order

PROCEDURAL HISTORY

On June 27, 1979, the Commission published in the Federal Register (44 F.R. 37567) notice of an investigation to determine whether there is a violation of section 337(a) of the Tariff Act of 1930 in the unlawful importation of certain inclined-field particle acceleration tubes and components thereof into the United States or in their sale because of the alleged infringement of claims 1-6 of U.S. Letters Patent No. 3,308,323, the effect or tendency of which is substantially to injure and efficiently and economically operated domestic industry.

On December 11, 1979, respondent Dowlish Developments, Ltd., filed a motion for summary determination of noninfringement. On May 6, 1980, the Commission denied the motion for summary determination, remanded the investigation to the presiding officer on all issues, and designated the investigation more complicated within the meaning of 19 U.S.C. 1337(b)(1) and 19 CFR 210.15. The hearing in a more complicated investigation must be completed within 12 months of the notice of investigation, in this instance by June 27, 1980, in accordance with section 210.41(e)(1) of the Commission's Rules of Practice and Procedure (19 CFR 210.51(e)(1)).

On May 21, 1980, respondent Dowlish moved for extension of the date set for completion of trial in this investigation (motion docket No. 67-21). The presiding officer recommended that an extension of one month be granted, with a new hearing completion date of July 27, 1980, and a due date for the recommended determination of September 27, 1980 (order No. 14).

ACTION

Having considered the procedural posture of the investigation, Dowlish's motion for an extension, and the presiding officer's recommendation, the Commission voted on June 5, 1980, to extend the date for completion of trial and the due date for a recommended determination in this investigation to allow the parties more time for preparation for trial and to facilitate preparation of a more complete record on which the Commission may make its determination.

ORDER

Accordingly, the commission hereby orders that—

(1) The time requirements of 19 CFR 210.41(e)(1) are waived for this investigation;

(2) The new date for completion of the hearing is July 27, 1980;

(3) The new date for the recommended determination is September 27, 1980; and

(4) The Secretary shall serve copies of this action and order upon each party of record to this investigation and shall cause it to be published in the Federal Register.

By order of the Commission.

Issued: June 6, 1980.

KENNETH R. MASON,
Secretary.

In the Matter of CERTAIN FOOD SLICERS AND COMPONENTS THEREOF	Investigation No. 337-TA-76

Notice of Commission Determination To Amend the Complaint and Notice of Investigation, and To Designate the Investigation More Complicated

Background.—On December 13, 1979, the Commission instituted an investigation (44 F.R. 75738) to determine whether there is a violation of section 337 in the unlawful importation of certain food slicers and components thereof into the United States or in their sale because of the alleged infringement by such food slicers of claim 7 of U.S. Letters Patent No. 3,766,817, the effect or tendency of which is to destroy or substantially injure an industry efficiently and economically operated in the United States. On April 1, 1980, complainant, Prodyne Enterprises, Inc., filed a motion (motion No. 76-2) to expand the investigation to include the alleged infringement of claim 1 of the '817 patent, as well as claim 7. Complainant alleges that Crest Industries, one of the respondents, has allegedly modified and redesigned its food slicer device. Complainant asserts that, while there may be some question as to the infringement of claim 7 by the new device, there is infringement of claim 1. On April 8, 1980, the Commission investigative attorney supported complainant's motion 76-2. On April 14, 1980, complainant filed a motion to amend the complaint (motion No. 76-4), which amends and expands motion 76-2, requesting that the complaint and notice of investigation be amended to include claims 1 and 6 of the '817 patent, as well as claim 7. On April 17,

1980, respondent Crest Industries, opposed both motions 76–2 and 76–4. Crest raised two points in its opposition to the amended complaint. First, the proposed amendment to the complaint is unclear, and second, that there is not enough time left to complete discovery on the new issues.

On April 22, 1980, the ALJ made her recommendation, which was certified to the Commission, to expand the scope of the investigation and designate the investigation more complicated.

Commission determination.—Having considered the recommendation of the presiding officer and the submissions of the parties, the Commission determines that complainant's motions (motion No. 76–2 and No. 76–4) to amend the complaint and notice of investigation are granted to include that claim 1 of the '817 patent is allegedly infringed by respondent Crest Industries, Corp. and that claims 6 and 7 are allegedly infringed by all of the respondents.

Since the Commission has determined to expand the investigation, the Commission determines that the investigation be designated more complicated to allow the parties the additional time needed for discovery on the new issues.

A copy of the Commission's memorandum opinion is available from the Office of the Secretary of the Commission.

By order of the Commission.

Issued: June 9, 1980.

KENNETH R. MASON,
Secretary.

Index

U.S. Customs Service

Treasury decisions:
Availability of guidelines, mitigation of claims for monetary penalties, etc.—parts 103, 171, Customs Regulations amended ..... T.D. No. 80-160
Bonds: Consolidated aircraft 80-161
Bonds: Carrier 80-162
Bonds: Instruments of international traffic 80-163
Foreign currencies: Daily rates for countries not on quarterly list, June 2-6, 1980 80-171
Foreign currencies: Rates which varied from quarterly rate, June 2-6, 1980 80-172
Manmade fiber textile products—restriction on entry 80-164
Cotton textile products—restriction on entry:
Pakistan 80-167
India 80-168
Pakistan 80-170
Cotton and manmade fiber textile products—restriction on entry:
Haiti 80-165
Poland 80-166
People's Republic of China 80-169
Dominican Republic 80-174
Customs bonds 80-173

Customs Court

Appeal to U.S. Court of Customs and Patent Appeals (p. —):
Appeal 80-31—Sugar; increased duty; date of exportation; Presidential proclamations; summary judgment

U.S. GOVERNMENT PRINTING OFFICE : 1980 O - 322-274

JUL 14 1980
Item 950-D
T1.11/3:14/28

Customs Bulletin

Regulations, Rulings, Decisions, and Notices concerning Customs and related matters

and Decisions

of the United States Court of Customs and Patent Appeals and the United States Customs Court

322-275
377
9247

Vol. 14 | JULY 9, 1980 | No. 28

This issue contains

T.D. 80–175 and 80–176

C.A.D. 1248

Protest abstracts P80/88 through P80/91

International Trade Commission Notice

THE DEPARTMENT OF THE TREASURY
U.S. Customs Service

NOTICE

The abstracts, rulings, and notices which are issued weekly by the U.S. Customs Service are subject to correction for typographical or other printing errors. Users may notify the U.S. Customs Service, Logistics Management Division, Washington, D.C. 20229, of any such errors in order that corrections may be made before the bound volumes are published.

For sale by the Superintendent of Documents, U.S. Government Printing Office, Washington, D.C. 20402. Price: $2.25 (single copy domestic); $2.85 (single copy foreign). Subscription price: $85.00 a year domestic; $106.25 a year foreign.

U.S. Customs Service

Treasury Decisions

(T.D. 80–175)

Synopses of Drawback Decisions

The following are synopses of drawback rates issued June 19, 1979, to April 17, 1980, inclusive, pursuant to sections 22.1 through 22.5, inclusive, Customs Regulations.

In the synopses below are listed for each drawback rate approved under 19 U.S.C. 1313(b), the name of the company, the specified articles on which drawback is authorized, the merchandise which will be used to manufacture or produce these articles, the factories where the work will be accomplished, the date the statement was signed, the basis for determining payment, the Regional Commissioner to whom the rate was forwarded, and the date on which it was forwarded.

Dated: June 18, 1980.

ALFRED G. SCHOLLE,
Director,
Carriers, Drawback and Bonds Division.

(A) Company: Associated Beverage Co., Inc., d.b.a. Seven-Up Bottling Cos. of Southern California.
Articles: Soft drinks.
Merchandise: Liquid refined invert sugar.
Factories: Buena Park and Vernon, Calif.
Statement signed: August 3, 1979.
Basis of claim: Used in.
Rate forwarded to Regional Commissioner of Customs: Los Angeles, April 17, 1980.

(B) Company: Avtex Fibers Inc.
Articles: Vinyon staple fibers.
Merchandise: Polyvinyl chloride copolymer resin.
Factory: Meadville, Pa.

Statement signed: April 9, 1979.
Basis of claim: Used in.
Rate forwarded to Regional Commissioners of Customs: New York and Baltimore, April 14, 1980.

(C) Company: Cosmos Minerals Corp.
Articles: Titanium baskets, heating and cooling coils, anodizing rack systems, shell and heat tube exchangers.
Merchandise: Titanium strips; titanium sheets; titanium plates.
Factory: Camarillo, Calif.
Statement signed: March 14, 1980.
Basis of claim: Appearing in.
Rate forwarded to Regional Commissioner of Customs: Los Angeles, April 7, 1980.

(D) Company: Crosby Valve & Gage Co.
Articles: Safety relief valve.
Merchandise: Valve parts and raw castings.
Factory: Wrentham, Mass.
Statement signed: July 10, 1979.
Basis of claim: Appearing in.
Rate forwarded to Regional Commissioner of Customs: Boston, April 14, 1980.

(E) Company: E. I. du Pont de Nemours & Co., Inc.
Articles: Adipic acid; hexamethylene diamine; nylon resins, yarn, staple, strapping, tow, fiberfill, and fiberstock.
Merchandise: Cyclohexane, adiponitrile, hexamethylene diamine, adipic acid.
Factories: Various factories as listed in manufacturer's statement.
Statement signed: March 13, 1980.
Basis of claim: Appearing in.
Rate forwarded to Regional Commissioner of Customs: Baltimore, April 7, 1980.
Revokes: T.D. 54882–G, as amended by T.D.'s 56027–E, 56197–K, 66–49–H, 66–146–G, 67–183–F, and 68–68–E; and T.D. 78–254–J.

(F) Company: B. F. Goodrich Co.
Articles: Tires rubber pneumatic and rayon tire cord fabric.
Merchandise: Rayon yarn.
Factories: Tuscaloosa, Ala., Akron, Ohio, Miami, Okla., Oaks, Pa., Thomaston, Ga., and Woodburn, Ind.
Statement signed: May 18, 1979.
Basis of claim: Appearing in.

Rate forwarded to Regional Commissioner of Customs: Miami, March 17, 1980.

(G) Company: The Goodyear Tire & Rubber Co.
Articles: Treated tire ply wire and calendered tire ply wire.
Merchandise: High carbon steel cable.
Factories: Various factories as listed in manufacturer's statement.
Statement signed: August 10, 1978.
Basis of claim: Used in.
Rate forwarded to Regional Commissioner of Customs: Chicago, April 14, 1980.

(H) Company: Grandma's Foods, Inc.
Articles: Cookies and fruit bars.
Merchandise: Hard refined sugar.
Factories: Beaverton, Oreg. and Longview, Tex.
Statement signed: March 12, 1980.
Basis of claim: Appearing in.
Rate forwarded to Regional Commissioner of Customs: San Francisco, April 7, 1980.

(I) Company: Guilford Mills, Inc.
Articles: Dyed or undyed nylon, polyester, acetate, or blended piece goods.
Merchandise: Nylon yarn, polyester yarn, acetate yarn.
Factories: Lowell, Greensboro, and Kenansville, N.C.
Statement signed: August 16, 1979.
Basis of claim: Appearing in.
Rate forwarded to Regional Commissioner of Customs, New York: April 1, 1980.
Revokes: T.D. 77-135-N.

(J) Company: Guilford Mills, Inc.
Articles: Laminated piece goods.
Merchandise: Nylon yarn, polyester yarn, acetate yarn.
Factory: Greensboro, N.C.
Statement signed: August 16, 1979.
Basis of claim: Appearing in.
Rate forwarded to Regional Commissioner of Customs: New York, March 26, 1980.

(K) Company: The Lubrizol Corp.
Articles: Lubricant additives.
Merchandise: Basic calcium sulfonate.

Factories: Painesville, Ohio, Houston and Pasadena, Tex.
Statement signed: January 11, 1980.
Basis of claim: Used in.
Rate forwarded to Regional Commissioner of Customs: Chicago, March 26, 1980.

(L) Company: Metalspecialties Inc.
Articles: Bismuth alloy ingots.
Merchandise: Indium ingot.
Factory: Fairfield, Conn.
Statement signed: February 14, 1980.
Basis of claim: Appearing in.
Rate forwarded to Regional Commissioner of Customs: New York, April 9, 1980.

(M) Company: Minnesota Mining & Manufacturing Co.
Articles: Data disc packs, cartridges, single disc media.
Merchandise: Aluminum substrate memory discs.
Factory: Weatherford, Okla.
Statement signed: November 13, 1979.
Basis of claim: Appearing in.
Rate forwarded to Regional Commissioner of Customs: Los Angeles, March 20, 1980.

(N) Company: Monolithic Memories, Inc.
Articles: Partially and fully fabricated semiconductor wafers.
Merchandise: Silicon wafers.
Factory: Sunnyvale, Calif.
Statement signed: June 22, 1979.
Basis of claim: Used in.
Rate forwarded to Regional Commissioner of Customs: San Francisco, March 17, 1980.

(O) Company: Monsanto Co.
Articles: Acrilan acrylic polymer and acrilan acrylic fiber.
Merchandise: Acrylonitrile.
Factory: Decatur, Ala.
Statement signed: February 14, 1980.
Basis of claim: Appearing in.
Rate forwarded to Regional Commissioners of Customs: Chicago and New York, April 7, 1980.
Revokes: T.D. 75–297–D.

(P) Company: Monsanto Co.
Articles: Avadex BW granular herbicide.
Merchandise: 2,3,3-trichloroallyl diisopropylthiocarbamate.
Factory: Muscatine, Iowa.
Statement signed: February 22, 1980.
Basis of claim: Appearing in.
Rate forwarded to Regional Commissioners of Customs: Chicago and New York, March 27, 1980.
Revokes: T.D. 80–62–T.

(Q) Company: Noel Canning Corp.
Articles: Still and/or carbonated beverages.
Merchandise: Invert liquid refined sugar.
Factory: Yakima, Wash.
Statement signed: February 20, 1980.
Basis of claim: Used in.
Rate forwarded to Regional Commissioner of Customs: San Francisco, March 21, 1980.

(R) Company: Packaging Corp. of America.
Articles: Corrugated shipping containers.
Merchandise: Corrugated medium paperboard.
Factory: Lockport, N.Y.
Statement signed: March 5, 1979.
Basis of claim: Appearing in.
Rate forwarded to Regional Commissioners of Customs: Boston and Chicago, April 7, 1980.

(S) Company: Rohm & Haas Delaware Valley Inc.
Articles: MR anionic ion exchange resins, GEL anionic ion exchange resins, and other ion exchange resins.
Merchandise: Aluminum chloride anhydrous.
Factory: Philadelphia, Pa.
Statement signed: April 18, 1979.
Basis of claim: Used in.
Rate forwarded to Regional Commissioner of Customs: Baltimore, June 26, 1979.
Revokes: Section No. 15, T.D. 78–397–U.

(T) Company: Rohm & Haas Delaware Valley Inc.
Articles: Stam.
Merchandise: Propionic acid.
Factory: Philadelphia, Pa.
Statement signed: May 11, 1979.

Basis of claim: Used in.
Rate forwarded to Regional Commissioner of Customs: Baltimore, June 25, 1979.
Revokes: Section No. 16, T.D. 78-397-U.

(U) Company: Rohm & Haas Delaware Valley Inc.
Articles: Plasticizers and syntans (orotans).
Merchandise: Formic acid.
Factory: Philadelphia, Pa.
Statement signed: May 11, 1979.
Basis of claim: Used in.
Rate forwarded to Regional Commissioner of Customs: Baltimore, June 19, 1979.
Revokes: Section No. 17, T.D. 78-397-U.

(V) Company: Rohm & Haas Delaware Valley Inc.
Articles: Surfactants and hyamines.
Merchandise: Dichloro ethyl ether.
Factory: Philadelphia, Pa.
Statement signed: April 18, 1979.
Basis of claim: Used in.
Rate forwarded to Regional Commissioner of Customs: Baltimore, June 26, 1979.
Revokes: Section No. 27, T.D. 78-397-U.

(W) Company: Rohm & Haas Delaware Valley Inc.
Articles: Plexiglas molding powder, implex powder, acryloid modifiers, acryloid solution coatings, acryloid solid coatings, and oil additives.
Merchandise: N-DDM Mercaptan.
Factory: Bristol, Pa.
Statement signed: May 11, 1979.
Basis of claim: Used in.
Rate forwarded to Regional Commissioner of Customs: Baltimore, June 25, 1979.
Revokes: Section No. 29, T.D. 78-397-U.

(X) Company: Rohm & Haas Delaware Valley Inc.
Articles: Plexiglas sheet, plexiglas and implex molding powder, Kydex sheet, distilled grades of inhibited and/or uninhibited methyl methacrylate, specialty methacrylates, monomer blends, acryloid modifiers (K series), other modifiers, emulsions (Rhoplex and Primal, Acrysol and Rhotex), acryloid solution and solid coatings, acryloid coatings and resins, Paraplex P series, orthochrom, and oil additives (VI improvers, HF grades and miscellaneous).

Merchandise: Methyl methacrylate.
Factories: Philadelphia and Bristol, Pa.
Statement signed: April 18, 1979.
Basis of claim: Used in.
Rate forwarded to Regional Commissioners of Customs: Baltimore, July 3, 1979.
Revokes: Section No. 33, T.D. 78-397-U.

(Y) Company: Stoody Co.
Articles: Arc welding electrodes of base metal in coils and spools, steel welding wires or rods.
Merchandise: High carbon chrome, low carbon chrome, low carbon ferrochromium.
Factory: Industry, Calif.
Statement signed: July 3, 1979.
Basis of claim: Appearing in.
Rate forwarded to Regional Commissioners of Customs: Los Angeles, March 28, 1980.

(Z) Company: Time Inc.
Articles: Magazines.
Merchandise: Coated and uncoated groundwood printing paper.
Factories: Various factories through its agents under T.D. 55207(1).
Statement signed: November 7, 1979.
Basis of claim: Used in, less valuable waste.
Rate forwarded to Regional Commissioners of Customs: Chicago and Miami, April 1, 1980.
Revokes: T.D. 54758-C; T.D. 54339-D as amended by T.D. 54758-D.

(T.D. 80-176)

Changes in the Customs Field Organization; Section 101.3, Customs Regulations, Amended

TITLE 19—CUSTOMS DUTIES

CHAPTER I—U.S. CUSTOMS SERVICE

PART 101—GENERAL PROVISIONS

AGENCY: U.S. Customs Service, Department of the Treasury.

ACTION: Final rule.

SUMMARY: This document amends the Customs Regulations to change the field organization of the Customs Service by establishing,

322-275 O - 80 - 2

on a 2-year experimental basis, a new Customs port of entry at Huntsville, Ala., in the Mobile, Ala., Customs district. The change is part of Customs continuing program to obtain more efficient use of its personnel, facilities, and resources, and to provide better service to carriers, importers, and the public.

EFFECTIVE DATE: Thirty days from the date of publication in the Federal Register.

FOR FURTHER INFORMATION CONTACT: Richard C. Coleman, Office of Inspection, U.S. Customs Service, 1301 Constitution Avenue NW., Washington, D.C. 20229; 202–566–5354.

SUPPLEMENTARY INFORMATION:

BACKGROUND

As part of a continuing program to obtain more efficient use of its personnel, facilities, and resources, and to provide better services to carriers, importers, and the public, Customs published a notice in the Federal Register on February 15, 1980 (45 F.R. 10365), proposing to establish, on a 2-year experimental basis, a new Customs port of entry at Huntsville, Ala., in the Mobile, Ala., Customs district (region V).

Interested parties were given until April 15, 1980, to submit comments regarding this change. No comments were received.

After review of the proposal, Customs has determined to establish a new port of entry at Huntsville, Ala., on a 2-year experimental basis. Establishing a port of entry at Huntsville will be helpful in redistributing the Customs workload from the congested Los Angeles, Calif., and Chicago, Ill., ports of entry which now clear most imported merchandise destined to the Huntsville area.

CHANGE IN CUSTOMS FIELD ORGANIZATION

Under the authority vested in the President by section 1 of the act of August 1, 1914, 38 Stat. 623, as amended (19 U.S.C. 2), and delegated to the Secretary of the Treasury by Executive Order No. 10289, September 17, 1951 (3 CFR 1949–53 comp., ch. II), and pursuant to authority provided by Treasury Department order No. 101–5 (44 F.R. 31057), Huntsville, Ala., is designated as a Customs port of entry in the Mobile, Ala., Customs district (region V), on a 2-year experimental basis. The geographical boundaries of the Huntsville, Ala., district include all the territory within the counties of Limestone, Madison, Morgan, and Marshall, all in the State of Alabama.

AMENDMENT TO THE REGULATIONS

To reflect this change, the list of Customs regions, districts, and ports of entry in the Mobile, Ala., Customs district (region V), in

section 101.3(b), Customs Regulations (19 CFR 101.3(b)), is amended by inserting "Huntsville, Ala., including the territory described in T.D. 80–176" directly below "Gulfport, Miss." in the column headed "ports of entry."

EVALUATION AT END OF 2-YEAR PERIOD

To determine whether (1) the inland port at Huntsville relieves the workload at Los Angeles and Chicago and other border ports, and (2) their is sufficient need for Customs services continuing in the area, the Huntsville port of entry is established on a 2-year basis. At the conclusion of the 2-year period, Customs will evaluate the amount of international business, continued need for Customs services in the area, and the adequacy of Customs facilities. If the extent of that business or the adequacy of the facilities fail to meet the criteria used by customs to determine port of entry eligibility, the designation of Huntsville as a port of entry will be revoked.

REGULATION DETERMINED TO BE NONSIGNIFICANT

In a directive published in the Federal Register on November 8, 1978 (43 F.R. 52120), implementing Executive Order 12044, "Improving Government Regulations," the Treasury Department stated that it considers each regulation or amendment to an existing regulation published in the Federal Register and codified in the Code of Federal Regulations to be significant. However, regulations which are nonsubstantive, essentially procedural, do not materially change existing or establish new policy, and do not impose substantial additional requirements or costs on, or substantially alter the legal rights or obligations of those affected, with secretarial approval, may be determined not to be significant. Accordingly, it has been determined that this amendment does not meet the Treasury Department criteria in the directive for significant regulations.

DRAFTING INFORMATION

The principal authors of this document were Betty A. Stemley and Laurie Strassberg Amster, Regulations and Research Division, Office of Regulations and Rulings, U.S. Customs Service. However, personnel from other Customs offices participated in its development.

Dated: June 16, 1980.

RICHARD J. DAVIS,
Assistant Secretary of the Treasury.

[Published in the Federal Register July 1, 1980 (45 F.R. 44263)]

Decisions of the United States Court of Customs and Patent Appeals

(C.A.D. 1248)

MATTEL, INC. *v.* THE UNITED STATES, No. 79–28
THE UNITED STATES *v.* MATTEL, INC., No. 79–29

1. CLASSIFICATION OF IMPORTS—PHONOGRAPH RECORDS.

Appeal and cross-appeal from judgment of U.S. Customs Court in *Mattel, Inc.* v. *United States*, 83 Cust. Ct. ——, C.D. 4805 (1979), which overruled Government's classification and sustained an alternative claim by Mattel for classification of its imported merchandise as phonograph records. Reversed.

2. ID.—NONFILING OF FREE-ENTRY, CLAIM-SUPPORTING DOCUMENTS.

For purposes of 19 CFR 10.112, intentional nonfiling of free-entry, claim-supporting documents required by 19 CFR 10.1 is not legal equivalent of willful negligence when there is evidence of positive action demonstrating absence of willful negligence.

3. ID.

Free-entry, claim-supporting documents required by 19 CFR 10.1 could properly be filed late with Customs Court under 19 CFR 10.112.

4. ID.—DUTY-FREE ENTRY UNDER TSUS ITEM 807.00.

Records exported in bulk quantities to Mexico, packaged in envelopes attached to talking phone units for retail sale, and imported into the United States are classifiable as duty free under item 807.00, TSUS, as the U.S. goods component of articles assembled abroad, said component not having been advanced in value or improved in condition while abroad except by being assembled.

U.S. Court of Customs and Patent Appeals, June 19, 1980

Appeal from U.S. Customs Court, C.D. 4805

[Reversed]

Louise A. LaMothe and *Marjorie M. Shostak*, attorneys for Mattel, Inc. *Judy Seder Bardugo* and *John N. Politis* of counsel.

Alice Daniel, Assistant Attorney General, *David M. Cohen*, Director, *Joseph I. Liebman*, Attorney in Charge, *Saul Davis*, Commercial Litigation Branch, attorneys for the United States.

[Oral argument on May 5, 1980 by *Louise A. LaMothe* and *Marjorie M. Shostak* for Mattel, Inc. *Saul Davis* for the United States]

Before MARKEY, *Chief Judge*, RICH, BALDWIN, MILLER, *Associate Judges* and WINNER,[1] *Chief Judge*, U.S. District Court of Colorado.

MILLER, Judge.

[1] This case is before us on appeal by Mattel, Inc. (Mattel) and cross-appeal by the Government from the decision and judgment of the U.S. Customs Court sustaining Mattel's alternative claim for classification of the involved merchandise under item 724.25, TSUS, as phonograph records dutiable at 5 percent ad valorem. Mattel's primary claim, the subject of its appeal, is that the involved merchandise is classifiable as duty free under (1) item 800.00, TSUS, as U.S. goods returned after having been exported without having been advanced in value or improved in condition while abroad, or (2) item 807.00, TSUS, as the U.S. goods component of articles assembled abroad, said component not having been advanced in value or improved in condition while abroad except by being assembled.[2] The Customs Service classified the involved merchandise under item 737.90, TSUS, as toys, and parts of toys, n.s.p.f., other, dutiable at 17.5 percent ad valorem, the correctness of which is the subject of the Government's cross-appeal. We hold that the involved merchandise is classifiable as duty free under item 807.00, TSUS, and reverse the decision and judgment below.

BACKGROUND

The involved merchandise covering 10 entries consists of phonograph records manufactured in the United States which were exported in bulk quantities to Mexico, where they were packaged for retail sale in envelopes and imported into the United States at Los Angeles-Long Beach during the period of August 18–November 21 1972, in association with talking toy telephones (not in issue here), known and sold as Mattel-O-Phones and Talking Picture Phones, the latter in two styles, depending on the types of records included: Nice Neighbors Talking Picture Phone (Nice Neighbors Phone), and Alphabet-Talking Pictures Phone (Alphabet Phone).[3] The records

[1] Hon. Fred M. Winner, Chief Judge, U.S. District Court for the District of Colorado, sitting by designation.

[2] Under item 800.00, the goods are duty free; while under item 807.00, duty is calculated on the full value of the imported assembled article less the cost or value of the U.S. goods component.

[3] In the Mattel-O-Phone package five 4-inch records were packed in a manila envelope; in each of the Nice Neighbors and Alphabet Phone packages, six 2½-inch records were packed in a clear plastic envelope. An appropriate envelope was stapled to each phone unit.

have no hole in the center and possess no use independent from the toy telephones. On the Mattel-O-Phone records appears the legend "©Mattel, Inc. 1964," and on the other records appear the words "Made and printed in U.S.A."

The Customs Court denied Mattel's primary claim for duty-free classification on the basis of Mattel's failure to timely file free-entry, claim-supporting documents required by Customs Regulation 19 CFR 10.1.[4] Mattel argues that its claims for free entry of the records imported with the Alphabet Phone and the Nice Neighbors Phone are not dependent on compliance with 19 CFR 10.1, because the words thereon provide the factual basis "determinable from an examination of the article(s)" within the exception from compliance provided by 19 CFR 10.1. It also argues that the evidence establishes that from 1968 to 1972 identical records were granted free-entry treatment—"a classification which was dependent on verification by the Customs officials of U.S. origin or production, without advancement in value or improvement in condition, and without payment of drawback"; and that waiver of documents required by 19 CFR 10.1 was denied only because the import specialist concluded "that neither he nor the District Director had authority to waive documentation requirements (when) the Customs Service was not going to accord duty-free treatment." [5]

Alternatively, Mattel argues that even if the filing of documents specified by 19 CFR 10.1 was required, as determined by the Customs Court, the requirement was satisfied by its tender of the documents to the Customs Court before final liquidation under 19 CFR 10,112, which permits late filing where failure to timely file "was not due to willful negligence or fraudulent intent."[6] With respect to this argument, the Customs Court concluded that Mattel failed to meet its burden of establishing that its failure to timely file the free-entry, claim-supporting documents was not due to willful negligence, adding that—

---

[4] 19 CFR 10.1 requires the filing of the following documents "in connection with the entry of articles claimed to be free of duty under schedule 8, part 1, Tariff Schedules of the United States": Foreign shipper's declaration, owner's declaration on Customs form 3311, District Director of Customs' certificate of exportation (Customs form 4467) showing that no drawback, bounty, or allowance has been paid or admitted thereon; and, for classification under item 807.00, foreign assembler's declaration with owner's endorsement thereon.

[5] Mattel calls attention to testimony that duty-free treatment of identical records was discontinued in 1972 because the import specialist did not regard the packaging of the records as an assembly operation, but concluded that the packaging was an advancement in value—a conclusion, Mattel argues, that was overruled by this court's decision in *United States* v. *Carr & Son, Inc.*, 61 CCPA 52, C.A.D. 1118, 496 F. 2d 1225 (1974) (individually packaged assortments of fishhooks held qualified for duty-free treatment under item 800.00 TSUS).

[6] See *F. W. Myers & Co.* v. *United States*, 70 Cust. Ct. 202, C.D. 4431, 369 F. Supp. 429, *appeal dismissed*, 61 CCPA 121 (1973); *Green Giant Co.* v. *United States*, 79 Cust. Ct. 61, 70, C.D. 4715 (1977).

> the record shows that the failure to timely file was intentional, which for purposes of section 10.112, is the legal equivalent of willful negligence.

The Customs Court observed that the Government had conceded that the free-entry, claim-supporting documents may be filed with the Customs Court if there was a showing that the late filing was not due to willful negligence or fraud.

The Customs Court referred to testimony of Mattel's director of import-export administration that when he and Mattel knew that the Customs Service was not going to allow duty-free treatment to the records,[7] they did not continue to file the free-entry documents required by the regulations, although such documents were filed regarding other components, specific mention of the records being omitted;[8] also to testimony of Mattel's manager of import-export documentation that it was standard operating procedure in 1972 to not file free-entry documents on merchandise that he knew would not be allowed duty-free treatment by the Customs Service. Such evidence persuaded the court to find the intentional character of the nonfiling of the free-entry documents.

The Customs Court further found that Mattel's constructed cost submissions (exhibits 15 B, D, E, and F) contained a footnote reading:

> Importer requesting judicial ruling that this merchandise is applicable under items 800.00 or 807.00 TSUS.

Of this, the court said:

> This notice of an intention to seek a judicial ruling * * * shows an intent not to seek a timely ruling by the Customs Service.

The constructed cost submissions were sent by letter from Mattel to the District Director of the Customs Service for the purpose of assisting in the computation of the estimated duty to be deposited with the entry and covered numerous components in addition to the records—some applicable under item 800.00, some applicable under item 807.00, and some, including the records, associable under various classifications. Earlier constructed cost submissions listed records as applicable under item 807.00.

OPINION

Although we are satisfied that substantial evidence supports the Customs Court's findings that the nonfiling of the free-entry, claim-supporting documents was intentional, in a nominal sense, we conclude that **[2]** the Customs Court erred in holding that "intentional

[7] He testified that in 1972 they were directed to pay duty on the records as toy parts under item 737.90.

[8] He also estimated that 1,500,000 documents went through his department in 1972.

* * * for purposes of section 10.112, is the legal equivalent of willful negligence." [9]

The Customs Regulations do not provide a definition of willful negligence. However, in *F. W. Myers & Co.* v. *United States*, 70 Cust. Ct. 202, C.D. 4431, 360 F. Supp. 429, *appeal dismissed*, 61 CCPA 121 (1973), the Customs Court, after reviewing several authorities,[10] said (at 209):

> It is to be observed that included in the term "willful negligence" by the authorities cited, supra, are two elements: (1) Intent or a deliberate or conscious and intentional omission to perform some act or duty; (2) reckless disregard of the consequences of the act done or failure to act by the party.

And further (at 210):

> The second element, involving a reckless disregard of the act done, defendant contends is established by the pattern of conduct of plaintiff. * * * While it is unquestionably true * * * that the length of time it took plaintiff to contact the ultimate consignee in order to obtain the missing documents constituted an inordinately long period of time, it does not in the opinion of the court amount to a reckless disregard of the rights of the party. Dilatory procedure would not in itself be sufficient to constitute reckless disregard of the rights of the party. Even if the court were to consider the length of time it took to contact the ultimate consignee to be a result of carelessness or inattention, however * * * gross, it is not tantamount to willful negligence.

Mattel points out that the Customs Court cited no case in which the concept of willful negligence did not include culpability and that the Government's citations,[11] as recognized by the Government itself, all involve a plaintiff's burden of proof (that there was no intent to defraud the revenue of the United States) when a petition for remission of duties under section 489 of the Tariff Act of 1930 was filed. The Government argues that it has established from these citations that the burden of proving freedom from willful negligence "is not fulfilled by simple statements, in vacuo, but must be proved by concrete evidence." Fair enough, but, as will be related infra, we are satisfied that positive action demonstrating absence of willful negligence has been shown here.

---

[9] The Customs Court also said that "it is not the function of sec. 10.112 to relieve an importer from the consequences of its deliberate acts" and appear to equate "intentional" and "deliberate" for purposes of 19 CFR 1.112, a point with which we do not disagree. However, it is clear that the regulation was promulgated to make the privilege of free entry less onerous by extending the time for filing of claim-supporting documents and, thereby, enabling free entry of merchandise that would otherwise have been excluded from such treatment. *Freres, Inc.* v. *United States*, 47 Cust. Ct. 155, 159, C.D. 2296 (1961).

[10] These included *Black's Law Dictionary*, 65 C.J.S. *Negligence* sec. 9(1)(c), and 57 Am. Jur. 2d *Wilful or Wanton Negligence* sec. 105.

[11] *United States* v. *Fish*, 268 U.S. 607, 612–13 (1925); *United States* v. *Kittelson*, 43 CCPA 31, 34–35, C.A.D. 605 (1955); *Pacific Coast Feather Co.* v. *United States*, 40 CCPA 141, 143, 147, C.A.D. 510 (1953); *United States* v. *W. J. Westerfield*, 40 CCPA 115, 124–26, C.A.D. 507 (1953).

We note that in the closely related field of Federal income taxation, the Supreme Court has, in cases of both tax felonies and tax misdemeanors, required that there be a bad purpose or evil motive to meet the statutory provision of willfulness. *United States* v. *Bishop*, 412 U.S. 346, 361 (1973); *United States* v. *Murdock*, 290 U.S. 389, 398 (1933). But see *United States* v. *McCorkle*, 511 F. 2d 482, 485 (7th Cir.), *cert. denied*, 423 U.S. 826 (1975). Although this requirement was stated in the context of criminal statutes, it is nevertheless relevant to the meaning of "willful" in a civil case, which merely requires a lesser burden of proof.

With respect to the Customs Court's statement that the footnote in Mattel's constructed cost submissions showed "an intent not to seek a timely ruling by the customs service," it appears that a timely ruling had in fact been made when, in 1972, duty-free treatment of records was discontinued by the Customs Service, and that further administrative action would have been futile. Also, there has been no showing by the Government that the customs revenue was, in any way, jeopardized by Mattel's decision, with notice to the Customs Service, to exercise its judicial remedies, or that Mattel had any bad motive or reckless disregard for the Customs Service in failing to file its free-entry, claim-supporting documents with the Customs Service.[12] Indeed, we are persuaded that the notice to the Customs Service was a positive action which affirmatively demonstrates the absence of willful negligence.[13]

[3] Accordingly, we hold that, under 19 CFR 10.112, Mattel was entitled to have its free-entry, claim-supporting documents filed with the Customs Court.

We note from the record that the Customs Court agreed with Mattel's counsel that, in the event Mattel was determined to have been neither fraudulent nor willfully negligent, the documents would be admitted into evidence and that Mattel would be deemed to have submitted all necessary documentation in support of its item 800.00 and item 807.00 claims. Therefore, on the basis of what clearly appears from the record and the exhibits, we further hold that the involved merchandise is **[4]** classifiable as duty free under item 807.00, TSUS, as the U.S. goods component of articles assembled abroad, said

[12] Mattel makes the point that "(i)t is not logical to assume that Mattel would sabotage its own ability to seek judicial review of its substantive claims by failing to type onto the claim-supporting documents which it filed with the entries in 1972 an additional six-digit number referencing the part number of the phonograph records."

[13] The Government argues that proof of freedom from intent to defraud is an easier standard to meet than freedom from willful negligence. Therefore, demonstrating absence of willful negligence a fortiori demonstrates freedom from fraudulent intent.

322-275 O - 80 - 3

component not having been advanced in value or improved in condition while abroad except by being assembled.[14]

The decision and judgment of the Customs Court are *reversed.*

[14] Because of this holding, it is unnecessary to reach Mattel's argument that it was not required to comply with 19 CFR 10.1; also, the cross-appeal by the Government must be dismissed.

Decisions of the United States Customs Court

United States Customs Court

One Federal Plaza
New York, N.Y. 10007

Chief Judge

Edward D. Re

Judges

Paul P. Rao
Morgan Ford
Scovel Richardson
Frederick Landis
James L. Watson
Herbert N. Maletz
Bernard Newman
Nils A. Boe

Senior Judge

Samuel M. Rosenstein

Clerk

Joseph E. Lombardi

Abstracts
Abstracted Protest Decisions

DEPARTMENT OF THE TREASURY, *June 16, 1980.*

The following abstracts of decisions of the United States Customs Court at New York are published for the information and guidance of officers of the Customs and others concerned. Although the decisions are not of sufficient general interest to print in full, the summary herein given will be of assistance to Customs officials in easily locating case and tracing important facts.

ROBERT E. CHASEN,
Commissioner of Customs.

DECISION NUMBER	JUDGE & DATE OF DECISION	PLAINTIFF	COURT NO.	ASSESSED	HELD	BASIS	PORT OF ENTRY AND MERCHANDISE
				Par. or Item No. and Rate	Par. or Item No. and Rate		
P80/88	Watson, J. June 10, 1980	Lloyd's Electronics Int'l	79-5-00858, etc.	Item 735.20 10%	Item 734.20 5.5%	APF Electronics v. U.S. (C.D. 4704)	New York; Los Angeles T.V. game player machines
P80/89	Maletz, J. June 10, 1980	Silvestri Art Mfg. Co.	77-4-00558	Item 737.80 22%	Item 725.50 8%	Amico, Inc. v. U.S. (C.A.D. 1214)	Chicago Music boxes
P80/90	Maletz, J. June 10, 1980	Spiegel, Inc.	77-3-00421	Item 737.80 22%	Item 725.50 8%	Amico, Inc. v. U.S. (C.A.D. 1214)	Chicago Music boxes
P80/91	Newman, J. June 10, 1980	S.G.B. Epic Co., Inc., *et al.*	73-6-01354, etc.	Item 657.20 15%, 13%, 11% or 9.5%	Item 652.98 11% or 9.5%	S.G.B. Steel Scaffolding & Shoring Co., Inc. v. U.S. (C.D. 4802)	New York Shore frame systems and parts thereof

International Trade Commission Notices

Investigations by the U.S. International Trade Commission

DEPARTMENT OF THE TREASURY

The appended notices relating to investigations by the U.S. International Trade Commission are published for the information of Customs Officers and others concerned.

R. E. CHASEN,
Commissioner of Customs.

In the Matter of CERTAIN SHELL BRIM HATS	Investigation No. 337–TA–86

Notice of Investigation

Notice is hereby given that a complaint was filed with the U.S. International Trade Commission on May 16, 1980 and amended on May 28, 1980, and on June 11, 1980, under section 337 of the Tariff Act of 1930 (19 U.S.C. 1337) and 19 U.S.C. 1337a on behalf of Zwicker Knitting Mills, 410 Richmond Street, Appleton, Wis. 54913, alleging that unfair methods of competition and unfair acts exist in the importation into the United States of certain shell brim hats, or in their sale, because such hats are alleged to infringe claims 1–7 and to be made in accordance with claims 8–11 of U.S. Letters Patent 3,898,699. The amended complaint alleges that the effect or tendency of the unfair methods of competition and unfair acts is to destroy or substantially injure an industry, efficiently and economically operated, in the United States.

Complainant requests that the Commission, after a full investigation has been conducted, order permanent exclusion from entry into the United States of the imports in question and provide such other and further relief as the Commission deems appropriate. Complainant also request that the Commission, during the pendency of the investigation, order temporary exclusion from entry into the United States of the imports in question.

Having considered the complaint, the Commission on June 12, 1980, ordered that—

(1) Pursuant to subsection (b) of section 337 of the Tariff Act of 1930 (19 U.S.C. 1337), an investigation be instituted to determine whether there is reason to believe that there is a violation and whether there is a violation of subsection (a) of this section in the unauthorized importation of certain shell brim hats into the United States, or in their sale, by reason that such hats are alleged (a) to be covered by claims 1–7 of the U.S. Letters Patent 3,898,669, and (b) to be made in accordance with claims 8–11 of said letters patent, the effect or tendency of which is to destroy or substantially injure an industry, efficiently and economically operated, in the United States;

(2) That for the purposes of this investigation so instituted, the following are hereby named as parties upon which this notice of investigation shall be served:

(a) The complainant is—

Zwicker Knitting Mills
410 Richmond Street
Appleton, Wis. 54913

(b) The respondents are the following companies alleged to be engaged in the unauthorized importation of such articles into the United States, or in their sale, and are parties upon which the complaint is to be served:

Aris-Isotoner Gloves, Inc. 417 Fifth Avenue New York, N.Y. 10016	Aris (Philippines), Inc. Orando Drive Nakati Risal, Philippines

(c) Edward M. Lebow, Acting Chief, Unfair Import Investigations Division, U.S. International Trade Commission, 701 E. Street NW., Washington, D.C. 20436, shall name the Commission investigative attorney, a party to this investigation; and

(3) For the investigation so instituted, Donald K. Duvall, Chief Administrative Law Judge, U.S. International Trade Commission, 701 E Street NW., Washington, D.C. 20436, shall designate the presiding officer.

The respondent Aris (Philippines), Inc., has been added in paragraph 3(b) above on the basis of the informal investigatory activities of the Commission.

Responses must be submitted by the named respondents in accordance with section 210.21 of the Commission's Rules of Practice and Procedure (19 CFR 210.21). Pursuant to sections 201.16(d) and 210.21(a) of the rules, such responses will be considered by the Commission if received not later than 20 days after the date of service of the complaint. Extensions of time for submitting a response will not be granted unless good and sufficient cause therefor is shown.

Failure of a respondent to file a timely response to each allegation in the complaint and in this notice may be deemed to constitute a waiver of the right to appear and contest the allegations of the complaint and this notice, and to authorize the presiding officer and the Commission, without further notice to the respondent, to find the facts to be as alleged in the complaint and this notice and to enter both a recommended determination and a final determination containing such findings.

The complaint is available for inspection by interested persons at the Office of the Secretary, U.S. International Trade Commission, 701 E Street NW., Washington, D.C. 20436, and in the Commission's New York Office, 6 World Trade Center, New York, N.Y. 10048.

By order of the Commission.

Issued: June 20, 1980.

KENNETH R. MASON,
Secretary.

In the Matter of CERTAIN COIN-OPERATED AUDIOVISUAL GAMES AND COMPONENTS THEREOF	Investigation No. 337-TA-87

Notice of Investigation

Notice is hereby given that a complaint was filed with the U.S. International Trade Commission on May 22, 1980, and amended by supplement on June 9, 1980, under section 337 of the Tariff Act of 1930 (19 U.S.C. 1337), on behalf of Midway Manufacturing Co., 10750 West Grand Avenue, Franklin Park, Ill. 60131, alleging that unfair methods of competition and unfair acts exist in the importation of certain coin-operated audiovisual games and brochures for the advertisement thereof into the United States, or in their sale, by reason of common law trade dress. The complaint (as supplemented) alleges that the effect or tendency of the unfair methods of competition and unfair acts is to destroy or substantially injure an industry, efficiently and economically operated, in the United States.

Complainant requests that the Commission order temporary exclusion from entry into the United States of the imports in question and issue a temporary cease and desist order during the pendency of the investigation, and requests that the Commission order permanent exclusion from entry and issue a permanent order to cease and desist after a full investigation has been conducted.

Having considered the complaint, the Commission on June 19, 1980, ordered that—

(1) Pursuant to subsection (b) of section 337 of the Tariff Act of 1930, an investigation be instituted to determine whether there is reason to believe that there is a violation and whether there is a violation of subsection (a) of this section in the unlawful importation of certain coin-operated audiovisual games and components thereof into the United States, or in their sale, by reason of common law trademark infringement, false designation of origin, passing off, and misappropriation of trade dress, the effect or tendency of which is to destroy or substantially injure an industry, efficiently and economically operated, in the United States;

(2) For the purpose of this investigation so instituted, the following are hereby named as parties upon which this notice of investigation shall be served:

(a) The complainant is—

Midway Manufacturing Co.
10750 West Grand Avenue
Franklin Park, Ill. 60131

(b) The following respondents are alleged to infringe complainant's common law trademark and to be engaged in false designation of origin:

En'sco Co., Ltd.
P.O. Box 81–110
38, Lane 155
Tun Hua North Road
Taipei, Taiwan

Chens International, Inc.
39 R-Thompson Street
Winchester, Mass. 01890

Circle International, Inc.
2225 West Pico Boulevard
Los Angeles, Calif. 90006

Bonanza Enterprises, Ltd.
Bonanza Bldg., 7–18, 3-Chome
Shin-Yamashita-cho, Naka-ku
Yokohama, Japan

Taito of Japan
2-5-3-Hirakawa-cho, Chiyoda-ku
Tokyo, Japan

Taito America Corporation
1256 Estes Avenue
Elk Grove Village, Ill. 60007

Hoei Sangyo
12–1, Minami-cho, 1-Chome
Tanashi, Tokyo, Japan

Justin Kaoh
336 O'Farrel
San Francisco, Calif. 94102

Acorn, Inc.
Ridge and Butter Pikes
Plymouth Shopping Center
Conshohocken, Pa. 19428

Stan Rousso, Inc.
2277 W. Pico Boulevard
Los Angeles, Calif. 90006

(c) The respondents listed in paragraph (b) above and the following additional respondents are alleged to be engaged in passing off and misappropriation of trade dress, and all are parties upon which the complaint (as supplemented) is to be served:

Universal Co. Ltd.
1–12–3 Nihonbashi
Horidome-Cho, Chuoh-Ku
Tokyo 103, Japan

Universal U.S.A. Inc.
d.b.a. Universal Co. Ltd.
Sunset-Vine Tower
Suite 1500
6290 Sunset Road
Hollywood, Calif. 90028

General Vending Sales Corp.
Howard and Biddle Streets
Baltimore, Md. 21201

Active Amusement Co.
666 Broad Street
Philadelphia, Pa. 19130

Nichibutsu
Nihon Bussan Co., Ltd.
12–9, 1–chome
Tenjinbashi, Kita-Ku
Osaka, Japan

I.J.S. Inc.
Nichibutsu
Distributor & Importer Suite 212
16910 Dallas Parkway
Dallas, Tex. 75248

Rowe International, Inc.
sub. Triangle Industries
75 Troy Hills Road
Whippany, N.Y. 07981

Arjay Export Co.
300 Barnstable Road
Hyannis, Massachusetts 02601

Wesco Co.
3024 Scott Boulevard
Santa Clara, Calif. 95050

(d) Edward M. Lebow, Acting Chief, Unfair Import Investigations Division, U.S. International Trade Commission, 701 E Street NW., Washington, D.C. 20436, shall name the Commission investigative attorney, a party to this investigation; and

(3) For the investigation so instituted, Donald K. Duvall, Chief Administrative Law Judge, U.S. International Trade Commission, 701 E Street NW., Washington, D.C. 20436, shall designate the presiding officer.

The allegation in the complaint described in the phrase "and brochures for the advertisement thereof" has been eliminated from the subject matter coverage of this investigation to the extent it encompasses a copyright violation. This action avoids possible duplication by the Commission of proceedings previously initiated by complainant before the U.S. Customs Service seeking exclusion of material which infringes complainant's copyright. Further, the phrase "and components thereof" has been added to paragraph (1) above on the basis of informal investigatory activities by the Commission which revealed

that the coin-operated audiovisual games can be imported as kits as well as entirely assembled units.

Responses must be submitted by the named respondents in accordance with section 210.21 of the Commission's Rules of Practice and Procedure (19 CFR 210.21). Pursuant to sections 201.16(d) and 210.21(a) of the rules, such responses will be considered by the Commission if received not later than 20 days after the date of service of the complaint. Extensions of time for submitting a response will not be granted unless good and sufficient cause therefor is shown.

Failure of a respondent to file a timely response to each allegation in the complaint and in this notice may be deemed to constitute a waiver of the right to appear and contest the allegations of the complaint and, this notice, and to authorize the presiding officer and the Commission without further notice to the respondent, to find the facts to be as alleged in the complaint and this notice and to enter both a recommended determination and a final determination containing such findings.

The complaint is available for inspection by interested persons at the Office of the Secretary, U.S. International Trade Commission, 701 E Street NW., Washington, D.C. 20436, and in the Commission's New York Office, 6 World Trade Center, New York, N.Y. 10048.

By order of the Commission.

Issued: June 20, 1980.

KENNETH R. MASON,
Secretary.

(19 CFR 207.46)

Investigation No. 731-TA-15 (Preliminary)

PIPES AND TUBES OF IRON OR STEEL FROM JAPAN

Notice of Reopening of April 14, 1980, Determination Because Erroneous Import Statistics Were Relied Upon in That Determination

AGENCY: U.S. International Trade Commission.

ACTION: Examination of the import statistics relied upon by the Commission in making its determination in investigation No. 731-TA-15 (preliminary) under the Tariff Act of 1930, Pipes and Tubes of Iron or Steel From Japan, indicates that a Commission reconsideration of that determination is necessary as those statistics were in error. Reconsideration of a preliminary determination is not undertaken lightly by this Commission. We recognize that Congress intended the

Commission to make its determinations based on "the best information available" (sec. 733(a) of the Tariff Act of 1930, 19 U.S.C. 1673b(a)). Even under the best of circumstances, the record in a preliminary determination will never be as complete and/or accurate as the record developed in the more thorough final investigation. The discovery of additional relevant information or minor statistical errors in previously reported information will normally not justify the reopening of a preliminary affirmative determination, since additions or corrections to the record will be adequately considered by the Commission in making its final determination. In rare instances, however, a clear mistake is made, unintentionally, by a reporting firm that may significantly alter the factual basis for the Commission's determination. That appears to be the situation in the case before us. Accordingly, the Commission has ordered that its determination be reopended for the purpose of reconsidering whether there is a reasonable indication that an industry in the United States is materially injured or threatened with material injury, or the establishment of an industry in the United States is materially retarded, by reason of the importation from Japan of welded pipes of steel provided for in item 610.3205 of the Tariff Schedules of the United States Annotated (TSUSA), which are allegedly sold or likely to be sold at less than fair value.

FOR FURTHER INFORMATION CONTACT: Mr. William E. Fry, Acting Director of Investigations, U.S. International Trade Commission, 202–523–0242.

SUPPLEMENTARY INFORMATION: In April 1980, the Commission found that information supplied in response to agency questionnaires indicated that U.S. imports of Japanese welded pipes, classified under item 610.3205 of the Tariff Schedules of the United States Annotated, had almost doubled in 1978 from their 1977 level, and in 1979, were 68 percent higher than in 1977. On April 25, 1980, the Commission received a request that it reconsider its determination in investigation No. 731–TA–15 on the basis that the data concerning the imports under item 610.3205 appeared to be in error for the years 1977–79.

In response to the request for reconsideration, the Commission contacted all of the respondents of the Commission's importers' questionnaire in investigation No. 731–TA–15. All but one of those firms indicated that the data they reported had been checked and verified. The remaining firm made substantial revisions in the data reported which change the aggregate import data compiled for item 610.3205 substantially. The Commission's Office of Investigations audited the underlying import records of the firm reporting the changes, and verified that the original data submissions were mistaken.

On June 16, 1980, the Commission ordered that its determination in investigation No. 731–TA–15 be reopened to reconsider the import of statistics concerning Japanese welded pipe classified under item 610.3205.

PUBLIC MEETING: The Commission has scheduled a briefing on this matter for its June 24, 1980, meeting. Commissioners will determine whether or not the corrected statistical data will change their individual determinations in investigation No. 731–TA–15, at this meeting.

REPORT: At the completion of this reconsideration, the Commission will transmit a report to the Secretary of Commerce. The Commission expects to transmit the report by July 7, 1980.

By order of the Commission.

Issued: June 18, 1980.

KENNETH R. MASON,
Secretary.

In the Matter of CERTAIN INCLINED-FIELD ACCELERATION TUBES AND COMPONENTS THEREOF	Investigation No. 337–TA–67

Commission Order

The U.S. International Trade Commission denies the petition, filed on May 20, 1980 by respondent Dowlish Developments, Ltd., for reconsideration of the Commission's denial of Dowlish's motion for summary determination of this investigation. On December 11, 1979, Dowlish filed a motion for summary determination of noninfringement of U.S. Letters Patent No. 3,380,323 (motion docket No. 67–12) on the basis of the doctrines of file wrapper estoppel and abandonment. After oral argument and the submission of briefs, the presiding officer recommended that Dowlish be granted summary determination and the investigation be terminated as to all respondents. The Commission heard oral argument on the recommended determination on March 12, 1980. After considering argument of counsel and written submissions, the Commission issued a "Notice of Commission determination denying the presiding officer's summary determination of noninfringement and designating this investigation as more complicated" on May 6, 1980. The Commission issued an opinion setting forth the reasons for its determination on May 14, 1980. Dowlish petitioned for reconsideration on May 19, 1980 (motion docket No. 67–23).

Under the Commission's Rules of Practice and Procedure, 19 CFR 210.56, "(a)ny petition for reconsideration must be confined to new questions raised by the determination * * * upon which the petitioner had no opportunity to submit arguments." Respondent Dowlish's motion for reconsideration and supporting brief raise no new questions of law or fact. The brief argues no new legal theories and raises only one point of authority not previously cited to the Commission, *Henriksen* v. *Cory*, 327 F. 2d 409 (7th Cir. 1964). That 16-year-old case turns on the application of file wrapper estoppel and the doctrine of equivalents.[1] Both the presiding officer in her recommended determination in favor of Dowlish and the Commission in its opinion ruled that file wrapper estoppel and the doctrine of equivalents are inapplicable to the Dowlish's motion for summary determination.

The Commission also denies Dowlish's request for oral argument.

The Secretary shall serve copies of this order upon each party of record to this investigation and cause it to be published in the Federal Register.

By order of the Commission.

Issued: June 18, 1980.

KENNETH R. MASON,
Secretary.

In the Matter of CERTAIN AIRTIGHT CAST IRON STOVES	Investigation No. 337–TA–69

Notice of Commission Request for Comments Concerning Consent Order Agreements and Settlement Agreements

AGENCY: U.S. International Trade Commission.

ACTION: Proposed consent order agreements and settlement agreements—request for public comment.

SUMMARY: These proposed consent order agreements and settlement agreements would result in termination of this investigation with respect to the 13 respondents covered by the agreements. This notice requests comments on the agreements. The agreements are available in the Office of the Secretary of the Commission.

DATES: Comments will be considered if received within 30 days of this notice. Comments should conform with Commission rule 201.8

[1] While the doctrine is not invoked by name, *Henriksen* is a doctrine of equivalents case. The court stated that "one device is an infringement of the other if it performs substantially the same function in substantially the same way to obtain the same result. In other words, * * * they are the same even though they may differ in name, form and shape." This is the classic definition of the doctrine.

(19 CFR 201.8) and should be addressed to Kenneth R. Mason, Secretary, U.S. International Trade Commission, 701 E Street NW., Washington, D.C. 20436.

FOR FURTHER INFORMATION CONTACT: Jeffrey S. Neeley, Office of the General Counsel, U.S. International Trade Commission, 701 E Street NW., Washington, D.C. 20436; telephone 202-523-0359.

SUPPLEMENTARY INFORMATION: In connection with the Commission's investigation under section 337 of the Tariff Act of 1930 (19 U.S.C. 1337), of alleged unfair method of competition and unfair acts in the importation or sale of certain airtight cast-iron stoves in the United States, the complainants and the Commission investigative attorney moved on June 3, 1980 (motion No. 69-26), to terminate this investigation as to respondents Nelson & Small, Inc. and Borneo Sumatra Trading Co., based upon settlement agreements. On June 10, 1980, the administrative law judge issued her recommendation (order No. 69-30) regarding the settlement agreements. The administrative law judge recommended that the Commission accept the agreements.

On June 3, 1980, the complainants and the Commission investigative attorney also filed motion 69-28, asking for termination of the investigation with regard to five respondents who had entered into consent order agreements. Those five respondents are Abundant Life Farms, Inc., Dutch West India, Inc., Blaze of California, Inc., Prebilt Corp., and Pay-N-Pak Stores, Inc. On June 10, 1980, the administrative law judge issued her recommendation (order No. 69-31) regarding the consent order agreements. The administrative law judge recommended that the Commission not accept the agreements for several reasons.

On June 10, 1980, the complainants and the Commission investigative attorney filed motion No. 69-30, asking for termination of the investigation as to six respondents, based upon consent order agreements. These six respondents are International Foundries, Inc., Hearth Craft, Inc., Lechmere Tire & Sales Co., Mr. Bar-B-Q, Inc., Sutherland Lumber Co., and Central Hardware Co. On June 11, 1980, the administrative law judge recommended that the consent order agreements not be accepted (order No. 69-32).

This investigation began with publication by the Commission of a notice in the Federal Register on July 12, 1979, (44 F.R. 40732) stating that an investigation was being instituted to determine:

> whether, on the basis of allegations set forth and supplemented with additional information provided the U.S. International Trade Commission, there are violations of subsection (a) of this section in the unlawful importation of certain airtight cast-iron wood- and coal-burning stoves in the United States, or in their sale by reason that such stoves are—

(a) violating Jotul's common law trademarks because such stoves are visually identical copies of Jotul's stoves;
(b) being passed off as Jotul's products;
(c) violating Jotul's registered U.S. trademarks; and
(d) being falsely advertised

the effect or tendency of which is to destroy or substantially injure an industry, efficiently and economically operated, in the United States or to restrain trade and commerce in the United States.

Twenty-five parties were named as respondents on July 12. By notice published in the Federal Register (44 F.R. 58816) on October 11, 1979, the Commission named 26 additional respondents. A subsequent notice dated October 24, 1979 (44 F.R. 61269), named one more respondent.

WRITTEN COMMENTS REQUESTED

Because the issues raised by the administrative law judge with regard to the consent order agreements are clear, no oral argument will be held with respect to the administrative law judge's recommendation. Because there has been no objection to the settlement agreements entered into by the parties and the administrative law judge has recommended that those agreements be accepted, the Commission also will not hear oral arguments with regard to those agreements.

However, in light of the Commission's duty to consider the public interest, the Commission requests written comments from persons concerning the effect of the termination of this investigation based upon the consent order agreements and the settlements agreements upon (1) the public health and welfare, (2) competitive conditions in the U.S. economy, (3) the production of like or directly competitive articles in the United States, and (4) U.S. consumers. These written comments must be filed with the Secretary to the Commission no later than 30 days after publication of this notice in the Federal Register. Complete copies of the proposed consent order agreements and the settlement agreements are available in the Office of the Secretary of the Commission.

ADDITIONAL INFORMATION

The original and 19 true copies of all written submissions must be filed with the Secretary of the Commission. Any persons desiring to submit a document (or portion thereof) to the Commission in confidence must request in camera treatment. Such a request should be directed to the Secretary and must include a full statement of the reasons why the Commission should grant such treatment. The Commission will either accept such submission in confidence or return it.

All nonconfidential written submissions will be open to public inspection at the Secretary's office.

By order of the Commission.

Issued: June 20, 1980.

KENNETH R. MASON,
Secretary.

In the Matter of CERTAIN INCLINED-FIELD ACCELERATION TUBES AND COMPONENTS THEREOF	Investigation No. 337-TA-67

Notice of Commission Request for Comments Concerning Settlement Agreement

PROCEDURAL HISTORY

In connection with the Commission's investigation under section 337 of the Tariff Act of 1930 (19 U.S.C. 1337), of alleged unfair methods of competition and unfair acts in the importation and sale of certain inclined-field acceleration tubes and components thereof in the United States, the presiding officer recommended on May 30, 1980, that the Commission grant a motion filed by the University of Pittsburgh on May 14, 1980, (motion docket No. 67-20), to terminate this investigation with respect to itself. Interested persons may obtain copies of the recommendation by contacting the Office of the Secretary to the Commission, 701 E Street NW., Washington, D.C. 20436; telephone 202-523-0161.

On June 27, 1979, the Commission published in the Federal Register (44 F.R. 37567) notice of an investigation to determine whether there is a violation of section 337(a) of the Tariff Act of 1930 in the unlawful importation of certain inclined-field particle acceleration tubes and components thereof into the United States or in their sale because of the alleged infringement of claims 1-6 of U.S. Letters Patent No. 3,308,323, the effect or tendency of which is substantially to injure an efficiently and economically operated domestic industry.

On May 14, 1980, respondent University of Pittsburgh filed a motion to terminate the investigation as to itself (motion docket No. 67-20). The University of Pittsburgh has entered into an agreement with complainant High Voltage Engineering, settling by license all claims of complainant against the University of Pittsburgh based on the purchase, use, repair, and sale of inclined-field acceleration tubes by the university. Respondent Dowlish Developments, Ltd., initially opposed the motion because the amount of consideration for the

license agreement was not disclosed. The University of Pittsburgh has since disclosed the consideration, which has been paid into escrow pending the outcome of the investigation.

The presiding officer has recommended that the motion for termination be granted (order No. 16, May 30, 1980).

WRITTEN COMMENTS REQUESTED

Because the motion to terminate this investigation with respect to the University of Pittsburgh based upon the settlement agreement is effectively unopposed and because the presiding officer has recommended termination on the basis of the settlement agreement, no oral argument will be held. However, in light of the Commission's duty to consider the public interest, the Commission requests written comments from the public concerning the effect of the termination of this investigation, based on the settlement agreement, upon (1) the public health and welfare, (2) competitive conditions in the U.S. economy, (3) the production of like or directly competitive articles in the United States, and (4) U.S. consumers. These written comments must be filed with the Secretary to the Commission no later than 30 days after publication of this notice in the Federal Register. The text of the settlement agreement follows:

TEXT OF THE SETTLEMENT AGREEMENT

This agreement entered into this 25th day of April, 1980, by and between the University of Pittsburgh, a nonprofit corporation organized and existing under the laws of the Commonwealth of Pennsylvania, having an office at 1028 Cathedral of Learning, Pittsburgh, Pa. 15260 (hereinafter called University) and High Voltage Engineering Corp., a corporation organized and existing under the laws of the State of Massachusetts, having an office of South Bedford Street, Burlington, Mass. 01803 (hereinafter called High Voltage).

Witnesseth: Whereas, High Voltage has been involved as complainant and University as one of the respondents in a U.S. International Trade Commission Investigation bearing the style Certain Inclined-Field Acceleration Tubes and Components Thereof—investigation No. 337-TA-67;

Whereas, High Voltage has charged University with infringement of licensed patents as hereinafter defined, on the basis of University's purchase of four acceleration tubes from Dowlish Developments, Ltd. and use of the same;

Whereas, High Voltage and University wish to resolve amicably the disputes which exist between them;

Now, therefore, for and in consideration of the undertakings of each to the other contained herein and intending to be legally bound hereby, the parties agree as follows:

1. As used in this agreement:

(a) "Licensed patents" means (i) Van De Graaf U.S. patent 3,308,323 for "Inclined-Field High-Voltage Vacuum Tubes" granted March 7, 1967, and (ii) Purser U.S. patent 3,423,684 for "Particle Acceleration Tube Having Electric Field Control Means" granted January 21, 1969, and (iii) any other patent owned or controlled by high voltage to the extent to which it might be infringed by sale or use of inclined-field acceleration tubes as herein defined.

(b) "Inclined-field acceleration tubes" means one or more of the four inclined-field acceleration tubes purchased by University from Dowlish Developments, Ltd.

2. High Voltage hereby waives and extinguishes all patent infringement claims as well as any other causes of action against University based upon University's purchase and use of inclined-field acceleration tubes.

3. High Voltage hereby grants and University accepts an irrevocable, nonexclusive license under licensed patents to purchase, use, repair, have repaired and sell inclined-field acceleration tubes.

4. High Voltage shall promptly take all reasonable action to have University dismissed as a respondent in said International Trade Commission investigation and shall cooperate with University in its efforts to be withdrawn from the investigation and any resultant decree.

5. (a) University shall promptly after execution of this agreement pay the sum of $10,000 to Henry C. Nields, Esquire of the firm of Russell & Nields, 60 State Street, Boston, Mass. 02109, hereinafter referred to as the escrow agent, by certified check payable to the order of "Henry C. Nields, Escrow Agent."

(b) The sum of $10,000 paid to the escrow agent under section 5(a) hereof shall be held by the escrow agent in a separate escrow account established by him for the purposes herein set forth until such time as payment to one or the other of the parties is required under section 6 hereof.

(c) It is agreed that escrow agent is not a party to and shall not be bound by agreements between High Voltage and University. Escrow agent shall act as a depository only, and escrow agent shall be liable only for his own willful gross negligence and misconduct.

(d) In the event of any disagreement between any of the parties resulting in adverse demands being made in connection with this deposit in escrow, escrow agent shall be entitled, at its option, to refuse to comply with any such claim or demand so long as the disagreement

shall continue, and in so doing escrow agent shall not become liable in any way to any person for its failure or refusal to comply with such conflicting or adverse claims until the rights of the claimants have been finally adjudicated or the differences adjusted between the parties, and escrow agent shall have been notified thereof in writing signed by all parties interested.

In the event the differences between the parties have not been adjusted and the escrow agent is so notified within a period of 60 days following receipt of notice by escrow agent, escrow agent may interplead the funds on deposit in escrow in a court of proper jurisdiction, and thereupon escrow agent shall be fully and completely discharged of its duties as escrow agent.

6. (a) In the event that said International Trade Commission investigation and any appeal (if any) therefrom results in a final decision that Licensed Patent 3,308,323 is invalid or unenforceable or not infringed by the Dowlish acceleration tubes, then escrow agent shall pay to University the $10,000, plus such interest as may have accumulated thereon, held by him under section 5, hereof and this agreement shall be completely and totally terminated. No waiver or extinguishment of claims under section 2 hereof nor any license under section 3 hereof shall survive such termination.

(b) In the event that said International Trade Commission Investigation and any appeal (if any) therefrom results in a final decision that Licensed Patent 3,308,323 is valid, enforceable, and infringed by the Dowlish acceleration tubes, then escrow agent shall pay to High Voltage the $10,000 plus such interest as may have accumulated thereon, held by him under section 5 hereof.

(c) Upon payment in accordance with either section 6(a) or section 6(b) hereof the escrow agent shall be fully and completely discharged of its duties as escrow agent hereunder.

7. There are no written or oral understandings of any nature whatsoever between the parties which are not expressed in this agreement, and this agreement may not be modified except in writing.

8. This agreement shall be construed, interpreted and governed by the laws of the Commonwealth of Pennsylvania.

In witness whereof, the parties have caused these presents to be executed in duplicate by their proper representatives thereunto duly authorized.

Attest:	High Voltage Engineering Corp.
_____	By_____
	Title_____
Attest:	University of Pittsburgh
_____	By_____
	Title_____

ADDITIONAL INFORMATION

The original and 19 true copies of all written submissions must be filed with the Secretary of the Commission. Any person desiring to submit a document (or portion thereof) to the Commission in confidence must request in camera treatment. Request should be directed to the Secretary of the Commission and must include a full statement of the reasons the Commission should grant such treatment. The Commission will either accept submissions in confidence or return them. All nonconfidential written submissions will be open to public inspection at the Secretary's Office.

By order of the Commission.

Issued: June 18, 1980.

KENNETH R. MASON,
Secretary.

731–TA–27 and 28 (Preliminary)

MENTHOL FROM JAPAN AND THE PEOPLE'S REPUBLIC OF CHINA

Notice of Institution of Preliminary Antidumping Investigations and Scheduling of Conference

AGENCY: U.S. International Trade Commission.

ACTION: Institution of preliminary antidumping investigations to determine whether there is a reasonable indication that an industry in the United States is materially injured, or is threatened with material injury, or the establishment of an industry is materially retarded, by reason of imports from Japan and the People's Republic of China of menthol, whether natural or synthetic, provided for in items 408.60 [1] and 437.64 of the Tariff Schedules of the United States (TSUS), sold or likely to be sold at less than fair value.

EFFECTIVE DATE: June 16, 1980.

FOR FURTHER INFORMATION CONTACT: Daniel Leahy, Senior Investigator, 202–523–1369.

SUPPLEMENTARY INFORMATION:

BACKGROUND

These investigations are being instituted following receipt of a petition on June 11, 1980, filed by Haarman & Reimer Corp., Spring-

[1] Menthol currently provided for in item 408.60, if exported and entered into the United States on or after the effective date of title II of the Trade Agreements Act of 1979 (93 stat. 194 et seq.) (expected to be July 1, 1980), will be provided for in new item 413.28 of the Tariff Schedules of the United States.

field, N.J., on behalf of the domestic industry producing synthetic menthol. The petition requested the imposition of additional duties in an amount equal to the amount by which the foreign market value exceeds the U.S. price of natural or synthetic menthol imported from Japan or from the People's Republic of China.

AUTHORITY

Section 733(a) of the Tariff Act of 1930 (19 U.S.C. 1673b(a)) requires the Commission to make a determination of whether there is a reasonable indication that an industry in the United States is materially injured, or is threatened with material injury, or the establishment of an industry in the United States is materially retarded, by reason of imports alleged to be, or likely to be, sold in the United States at less than fair value. Such a determination must be made within 45 days after the date on which a petition is filed under section 732(b) or on which notice is received from the Department of Commerce of an investigation commenced under section 732(a). Accordingly, the Commission, on June 16, 1980, instituted preliminary antidumping investigations Nos. 731–TA–27 and 28. These investigations will be subject to the provisions of part 207 of the Commission's Rules of Practice and Procedure (19 CFR 207, 44 F.R. 76457) and particularly, subpart B thereof.

WRITTEN SUBMISSIONS

Any person may submit to the Commission on or before July 14, 1980, a written statement of information pertinent to the subject matter of these investigations. A signed original and 19 copies of such statements must be submitted.

Any business information which a submitter desires the Commission to treat as confidential shall be submitted separately and each sheet must be clearly marked at the top "Confidential business data." Confidential submissions must conform with the requirements of section 201.6 of the Commission's Rules of Practice and Procedure (19 CFR 201.6). All written submissions, except for confidential business data, will be available for public inspection.

CONFERENCE

The Director of Operations of the Commission has scheduled a conference in connection with these investigations for 10 a.m., e.d.t., on July 10, 1980, at the U.S. International Trade Commission Building, 701 E Street NW., Washington, D.C. Parties wishing to participate in the conference should contact the senior investigator for the investigation, Mr. Daniel Leahy, 202–523–1369. It is anticipated that parties in support of the petition for antidumping duties and parties

opposed to such petition will each be collectively allocated 1 hour within which to make an oral presentation at the conference. Further details concerning the conduct of the conference will be provided by the senior investigator.

INSPECTION OF PETITION

The petition filed in these cases is available for public inspection at the Office of the Secretary, U.S. International Trade Commission and at the New York City office of the U.S. International Trade Commission located at 6 World Trade Center.

By order of the Commission:

Issued: June 17, 1980.

KENNETH R. MASON,
Secretary.

303–TA–13 (Final)

CERTAIN IRON-METAL CASTINGS FROM INDIA

Notice of Institution of Final Countervailing Duty Investigation and Hearing

AGENCY: U.S. International Trade Commission.

ACTION: Institution of final countervailing duty investigation to determine whether an industry in the United States is materially injured, or is threatened with material injury, or the establishment of an industry in the United States is materially retarded, by reason of imports from India of certain iron-metal castings, provided for in item 657.09 of the Tariff Schedules of the United States (TSUS), upon which the Administrating Authority has found a reasonable basis to believe or suspect that a subsidy is being provided.

EFFECTIVE DATE: May 20, 1980.

FOR FURTHER INFORMATION CONTACT: Patrick J. Magrath of the Commission's staff; 202–523–0283.

SUPPLEMENTARY INFORMATION:

BACKGROUND

A petition was received in satisfactory form on February 19, 1980, from James W. Pinkerton, Jr., of Pinkerton Foundry, Inc., Lodi, Calif., alleging that subsidies are provided by the Government of India on the production and exportation of certain iron-metal castings and that, as a result, an industry in the United States, economically and efficiently operated, is being materially injured. Such subsidies

are alleged to constitute a bounty or grant within the meaning of section 303 of the Tariff Act of 1930, as amended (93 Stat. 190, 19 U.S.C. 1303), hereinafter the act. Notice of the institution of the Commission's preliminary investigation and of a public conference to be held in connection therewith was duly given by posting copies of the notice in the Office of the Secretary, U.S. International Trade Commission, Washington, D.C., and at the Commission's New York office, and by publishing the notice in the Federal Register of February 27, 1980 (45 F.R. 12933). A public conference was held in Washington, D.C., on March 17, 1980.

Since India is not a "country under the agreement," within the meaning of section 701(b) of the act, that investigation was conducted pursuant to section 303 of the act, as amended by section 103 of the Trade Agreements Act of 1979.

On April 3, 1980, this Commission determined

> that there is a reasonable indication that an industry in the United States is materially injured by reason of the importation from India of manhole covers and frames, catch basin grates and frames, and cleanout covers and frames provided for in item No. 657.09 of the Tariff Schedules of the United States (TSUS).

Notice of that determination was published in the Federal Register (45 F.R. 25972, April 16, 1980).

On May 20, 1980, the Deputy Assistant Secretary for Import Administration, U.S. Department of Commerce

> preliminarily determined that benefits are granted by the Government of India to manufacturers, producers, or exporters of certain iron-metal castings which constitute a subsidy within the meaning of the countervailing duty law.

Authority.—Section 303(a)(2) of the act requires the Commission to conduct countervailing duty investigations pursuant to the provisions of title VII of the Tariff Act of 1930. Section 705(b) requires that the Commission make a final determination of injury within 120 days of the day on which the administering authority makes its affirmative preliminary determination under section 705(b) or within 45 days of the day on which the administering authority makes its affirmative final determination under section 703(a). Accordingly, the Commission hereby gives notice that effective as of May 20, 1980, it has instituted a final investigation into the above-referenced matter, pursuant to section 705(b) of the act. This investigation will be subject to the provisions of part 207 of the Commission's Rules of Practice and Procedure (19 CFR 207, 44 F.R. 76457) and, particularly, subpart C thereof.

Scope.—The present investigation is being titled "Certain Iron-metal Castings From India" to conform with the title used by the

Department of Commerce in its investigation. This change in no way affects the scope of the investigation or the products being studied. As in the preliminary investigation, this investigation will focus on certain iron-metal castings. For the purposes of this investigation, the term "certain iron-metal castings" means manhole covers and frames, catch basin grates and frames, and cleanout covers and frames, provided for in item 657.09 of the Tariff Schedules of the United States.

Written submissions.—Any person may submit to the Commission on or before the prehearing statement due date specified below a written statement of information pertinent to the subject matter of the investigation. A signed original and 19 true copies of such statements must be submitted.

Any business information which a submitter desires the Commission to treat as confidential shall be submitted separately and each sheet must be clearly marked at the top "Confidential Business Data." Confidential submissions must conform with the requirements of section 201.6 of the Commission's Rules of Practice and Procedure (19 CFR 201.6). All written submissions, except for confidential business data, will be available for public inspection.

Hearings.—The Commission has tentatively scheduled a hearing in connection with the investigation for 10 a.m., p.d.t., on Wednesday, August 27, 1980, in the Golden Gate Holiday Inn, 1500 Van Ness Avenue, San Francisco, Calif. A report containing preliminary findings of fact prepared by the Commission's professional staff will be made available to all interested persons prior to the hearing. Each party shall submit a prehearing statement on or before August 20, 1980. All persons who desire to appear at the hearing and make oral presentations must file prehearing statements. For further information consult the Commission's Rules of Practice and Procedure, part 207, subpart C (44 F.R. 76457), effective January 1, 1980.

By order of the Commission.

Issued: June 13, 1980.

KENNETH R. MASON,
Secretary.

In the Matter of
CERTAIN AIRTIGHT CAST-IRON STOVES } Investigation No. 337-TA-69

Notice of Commission Request for Comments Concerning Consent Order Agreements and Settlement Agreements

AGENCY: U.S. International Trade Commission.

ACTION: Proposed consent order agreements and settlement agreement—request for public comment.

SUMMARY: These 10 proposed consent order agreements and 1 settlement agreement would result in termination of this investigation with respect to the 11 respondents covered by the agreements. This notice requests comments on the agreements, which are available in the Office of the Secretary of the Commission, within 30 days.

DATES: Comments will be considered if received within 30 days of this notice. Comments should conform with Commission rule 201.8 (19 CFR 201.8) and should be addressed to Kenneth R. Mason, Secretary, U.S. International Trade Commission, 701 E Street NW., Washington, D.C. 20436.

FOR FURTHER INFORMATION CONTACT: Jeffrey S. Neeley, Office of the General Counsel, U.S. International Trade Commission, 701 E Street NW., Washington, D.C. 20436; telephone 202-523-0359.

SUPPLEMENTARY INFORMATION: In connection with the Commission's investigation, under section 337 of the Tariff Act of 1930 (19 U.S.C. 1337), of alleged unfair methods of competition and unfair acts in the importation or sale of certain airtight cast-iron stoves in the United States, the complainants, the Commission investigative attorney, and 10 respondents moved on April 16, 1980 (motion No. 69-23) to terminate this investigation as to those 10 respondents based upon consent order agreements. On May 14, 1980, the administrative law judge issued her recommendation (order No. 69-27) regarding the consent order agreements. The administrative law judge recommended that the Commission not accept the agreements for several reasons.

On June 2, 1980, the complainants, the Commission investigative attorney, and respondent Oriental Kingsworld Industrial Co., Ltd., filed a joint motion (motion No. 69-27) to terminate the investigation with prejudice as to Oriental Kingsworld, based upon a settlement agreement signed by those parties. On June 9, 1980, the administrative law judge recommended that the Commission accept the settlement agreement (order No. 69-28).

This investigation began with publication by the Commission of a notice in the Federal Register on July 12, 1979 (44 F.R. 40732) stating that an investigation was being instituted to determine:

> whether on the basis of allegations set forth and supplemented with additional information provided the U.S. International Trade Commission, there are violations of subsection (a) of this section in the unlawful importation of certain airtight cast-iron wood- and coal-burning stoves in the United States, or in their sale by reason that such stoves are—

(a) violating Jotul's common law trademarks because such stoves are visually identical copies of Jotul's stoves;
(b) being passed off as Jotul's products;
(c) violating Jotul's registered U.S. trademarks; and
(d) being falsely advertised.

the effect of tendency of which is to destroy or substantially injure an industry, efficiently and economically operated, in the United States or to restrain trade and commerce in the United States.

Twenty-five parties were named as respondents on July 12. By notice published in the Federal Register (44 F.R. 58816) on October 11, 1979, the Commission named 26 additional respondents. A subsequent notice dated October 24, 1979 (44 F.R. 61269) named one more respondent.

WRITTEN COMMENTS REQUESTED

Because the exceptions taken to the consent order agreements that recommendation by the complainants and the Commission investigative attorney have clarified the issues before the Commission with regard to the consent order agreements, no oral argument will be held with respect to the administrative law judge's recommendation. However, in light of the Commission's duty to consider the public interest, the Commission requests written comments from persons concerning the effect of the termination of this investigation based upon the consent order agreements and the settlement agreement upon (1) the public health and welfare, (2) competitive conditions in the U.S. economy, (3) the production of like or directly competitive articles in the United States, and (4) U.S. consumers. These written comments must be filed with the Secretary to the Commission no later than 30 days after publication of this notice in the Federal Register. All the consent order agreements are virtually identical. The 10 respondents who have signed agreements are Basco Inc., Harbor Sales Co., World Wide Distributors, Inc., Belknap. Inc., Lou Ehrlich, Inc., Himark Enterprises, Inc., Ranch-Rite, Inc., Omni Trading Co., Homestead Products, and Crane Industries. The one difference among the 10 consent agreements regards the word "copy," as defined in section III(F)(a). Each consent order agreement is different in that it names in that section the particular stoves sold by each respondent which were allegedly causing consumer confusion. In addition, the consent order agreement signed by Basco Inc. permits that company to sell no more than 100 stoves in inventory provided that it attaches a label setting forth in a reasonably conspicuous manner the actual manufacturing locale of such stove. Complete copies of the proposed consent order agreements and the settlement agreement are available in the Office of the Secretary of the Commission.

ADDITIONAL INFORMATION

The original and 19 true copies of all written submissions must be filed with the Secretary of the Commission. Any persons desiring to submit a document (or portion thereof) to the Commission in confidence must request in camera treatment. Such request should be directed to the Secretary and must include a full statement of the reasons why the Commission should grant such treatment. The Commission will either accept such submission in confidence or return it. All nonconfidential written submissions will be open to public inspection at the Secretary's office.

By order of the Commission.

Issued: June 16, 1980.

KENNETH R. MASON,
Secretary.

Reconsideration of Agency Determination Under Antidumping Act, 1921

AGENCY: U.S. International Trade Commission.

ACTION: Reconsideration by the Commission of its original determination in investigation No. AA1921–159, Tantalum Electrolytic Fixed Capacitors From Japan.

SUPPLEMENTARY INFORMATION: On the basis of an investigation conducted in the matter of tantalum electrolytic fixed capacitors from Japan, investigation No. AA1921–159 (41 F.R. 47604, Oct. 24, 1976), the Commission determined by a 5–to–1 vote that an industry in the United States was not being and was not likely to be injured by reason of the importation of such merchandise into the United States.

The Commission's negative determination was appealed to the U.S. Customs Court (*Sprague Electric Company* v. *United States* (Customs Court No. 77–9–03056)). While the appeal was pending, it was discovered that the Commission's determination had been based in part on erroneous official Government statistics for imports of tantalum capacitors from Japan.

On March 27, 1980, the Customs Court remanded the Japanese capacitors case to the Commission for the taking of a new vote on the question of injury or likelihood thereof in light of corrected import statistics. C.R.D. 80–3. On May 23, 1980, the Customs Court modified its directive to the Commission by instructing it "to include in its deliberations the consideration of Nippon Electric Co.'s plans to increase productive capacity for, and exportation to the United States of, epoxy dipped tantalum electrolytic capacitors." C.R.D. 80–6.

The Customs Court indicated its approval of the view that the Treasury Department's decision not to sever Nippon Electric's epoxy-dipped capacitors from the class or kind of merchandise embraced by Treasury's less-than-fair-value determination was binding upon the Commission as a matter of law, and that the Commission had no authority to modify the class or kind of merchandise found to be, or likely to be, sold at less than fair value.

PUBLIC COMMENT

In light of the views expressed by the Customs Court in C.R.D. 80-6, the Commission invites interested persons to submit comments on the question of whether the Commission's earlier determination in investigation No. AA1921-159, Tantalum Electrolytic Fixed Capacitors From Japan, should change by virtue of considering "epoxy dipped" tantalum electrolytic fixed capacitors exported to the United States by Nippon Electric Co. to be within the class or kind of merchandise found by the Department of the Treasury to have been sold or likely to be sold at less than fair value. Any such comments should be submitted as soon as possible, but not later than (21 days from the date this notice appears in the Federal Register). All submissions should be addressed to the Secretary, U.S. International Trade Commission, 701 E Street NW., Washington, D.C. 20436.

FOR FURTHER INFORMATION CONTACT: N. Tim Yaworski, Office of the General Counsel, U.S. International Trade Commission; 202-523-0311.

By order of the Commission.

Issued: June 16, 1980.

KENNETH R. MASON,
Secretary.

In the Matter of CERTAIN SLIDE FASTENER STRINGERS AND MACHINES AND COMPONENTS THEREOF FOR PRODUCING SUCH SLIDE FASTENER STRINGERS	Investigation No. 337-TA-85

Notice of Investigation

Notice is hereby given that a complaint was filed with the U.S. International Trade Commission on May 9, 1980, under section 337 of the Tariff Act of 1930 (19 U.S.C. 1337), on behalf of Talon Division of Textron, Inc., 626 Arch Street, Meadville, Pa. 16335, alleging that

unfair methods of competition and unfair acts exist in the importation into the United States of certain (1) slide fastener stringers, (2) chains made from such slide fastener stringers, (3) machines for producing such slide fastener stringers, and (4) stitcher-positioner machines, or in their sale, because such stringers and machines for producing such stringers are allegedly covered by, respectively, the claims of U.S. Letters Patent 3,143,779 and U.S. Letters Patent 3,123,103. The complaint alleges that the effect or tendency of the unfair acts is to destroy or substantially injure an industry, efficiently and economically operated in the United States.

Complainant requests that the Commission order a temporary exclusion from entry into the United States of the imports in question and a temporary cease and desist order during the pendency of the investigation, and requests a permanent exclusion from entry and a permanent order to cease and desist after a full investigation has been conducted.

Having considered the complaint, the Commission on June 3, 1980, ordered that—

(1) Pursuant to subsection (b) of section 337 of the Tariff Act (19 U.S.C. 1337), an investigation be instituted to determine whether there is reason to believe there is a violation and whether there is a violation of subsection (a) of section 337 in the unauthorized importation of certain (1) slide fasteners stringers, (2) chains made from such slide fastener stringers, (3) machines and components thereof for producing such slide fastener stringers, into the United States or in their sale, because of the alleged infringement by such slide fastener stringers, and machines for producing such slide fastener stringers, of the claims of U.S. Letters Patent 3,143,779 and U.S. Letters Patent 3,123,103, respectively, the effect or tendency of which is to destroy or substantially injure an industry, efficiently and economically operated, in the United States.

(2) For the purpose of this investigation so instituted, the following are hereby named as parties upon which this notice of investigation shall be served:

(a) The complainant is--

Talon Division of Textron, Inc.
626 Arch Street
Meadville, Pa. 16335

(b) The respondents are the following companies alleged to be engaged in the unauthorized importation of certain (1) slide fastener stringers, (2) chains made from such slide fastener stringers, and (3) machines and components thereof for producing such slide fastener

stringers into the United States, or in their sale, and are parties upon whom the complaint is to be served:

Yoshida Kogyo K.K.
1 Kanda
Izumicho
Chiyoda-Ku
Tokyo, Japan

YKK (USA) Inc.
1251 Valley Brook Avenue
Lyndhurst, N.J. 07071

YKK Export (USA) Inc.
1251 Valley Brook Avenue
Lyndhurst, N.J. 07071

(c) Edward M. Lebow, Acting Chief, Unfair Import Investigations Division, U.S. International Trade Commission, 701 E Street NW., Washington, D.C. 20436, shall name the Commission investigative attorney, a party to this investigation; and

(3) For the investigation so instituted, Donald K. Duvall, Chief Administrative Law Judge, U.S. International Trade Commission, 701 E Street NW., Washington, D.C. 20436, shall designate the presiding officer with instructions to issue a recommended determination as to temporary relief by July 31, 1980, and the Commission hereby shortens to 5 days the period to be allowed for filing exceptions to the recommended determination and for filing alternative findings of fact and conclusions of law under section 210.54 of the Commission's Rules.

The presiding officer shall also establish a schedule for oral presentations concerning the remedy, bonding, and public interest considerations for the purpose of creating an administrative record to be certified to the Commission by July 31, 1980. In addition to appearances and oral presentations on the remedy, bonding, and public interest considerations, the presiding officer shall provide for a prehearing briefing schedule to be published in the Federal Register soliciting the written views of any persons interested in this phase of investigation. The transcript of the oral presentations, the prehearing briefs, and the other written comments will comprise the administrative record concerning remedy, bonding, and the public interest factors to be certified to the Commission. The Commission shall issue its determination on temporary relief by August 31, 1980.

The phrase "and components thereof" has been added to paragraph (1) above on the basis of informal investigatory activities by the Commission which revealed that machines for producing the slide fastener stringers of the type alleged to infringe the claims of U.S. Letters Patent 3,123,103 can be imported in component parts as well as entirely assembled units.

The complaint contained a reference to the prevention of the establishment of an economically and efficiently operated industry in the United States, presumably referring to sources of potential domestic competition after the expiration of the subject patents. The Commission has not initiated an investigation into this allegation because complainant does not necessarily represent the interests of members of a hypothetical prospective domestic industry.

The complaint also alleges that the importation and sale of stitcher-positioner machines for use in connection with finished chain made from infringing slide fastener stringer induces infringement of U.S. Letters Patent 3,143,779. The imported stitcher-positioner machine is not alleged to infringe directly either U.S. Letters Patent 3,143,799. or U.S. Letters Patent 3,123,103. Induced infringement is a term of art which refers to a situation where the inducement occurs prior to or through the manufacture of the infringing item. In the circumstances alleged in the complaint, however, the stitcher positioner machine is not used until the allegedly infringing material has already been produced. Therefore, the Commission did not institute an investigation concerning this allegation.

Responses must be submitted by the named respondents in accordance with section 210.21 of the Commission's Rules of Practice and Procedure (19 CFR 210.21). Pursuant to sections 201.16(d) and 210.21(a) of the rules, such responses will be considered by the Commission if received not later than 20 days after the date of service of the complaint. Extensions of time for submitting a response will not be granted unless good and sufficient cause therefor is shown.

Failure of a respondent to file a timely response to each allegation in the complaint and in this notice may be deemed to constitute a waiver of the right to appear and contest the allegations of the complaint and this notice and to authorize the presiding officer and the Commission, without further notice to the respondent, to find the facts to be as alleged in the complaint and this notice and to enter both a recommended determination and a final determination containing such findings.

The complaint is available for inspection by interested persons at the Office of the Secretary, U.S. International Trade Commission, 701 E Street NW., Washington, D.C. 20436, and in the Commission's New York Office, 6 World Trade Center, New York, N.Y. 10048.

By order of the Commission.

Issued: June 12, 1980

KENNETH R. MASON,
Secretary.

In the Matter of CERTAIN INCLINED-FIELD ACCELERATION TUBES AND COMPONENTS THEREOF	Investigation No. 337-TA-67

Notice to All Parties

Notice is hereby given that the hearing in this case is scheduled to commence at 9 a.m., June 19, 1980 in room 201 at the Dodge Center, 1010 Wisconsin Avenue NW., Washington, D.C.

The Secretary shall serve a copy of this notice upon all parties of record and shall publish this notice in the Federal Register.

Issued: June 12, 1980.

JANET D. SAXON,
Administrative Law Judge.

In the Matter of CERTAIN LARGE VIDEO MATRIX DISPLAY SYSTEMS AND COMPONENTS THEREOF	Investigation No. 337-TA-75

Notice of Termination

Upon consideration of the presiding officer's recommendations and the record in this proceeding, the Commission is ordering the termination of investigation No. 337-TA-67, Certain Large Video Matrix Display Systems and Components Thereof, as to U.S. Letters Patent No. 4,148,073 by granting complainant's motion docket No. 75-77.

The order is effective as of June 13, 1980.

Any party wishing to petition for reconsideration of the Commission's action must do so within 14 days of service of the Commission order. Such petitions must be in accord with Commission rule 210.56 (19 CFR 210.56).

Copies of the Commission's action and order and any other public documents in this investigation are available to the public during official working hours (8:45 a.m. to 5:15 p.m.) in the Office of the Secretary, U.S. International Trade Commission, 701 E Street NW., Washington, D.C. 20436; telephone 202-523-0161.

Notice of the institution of this investigation was published in the Federal Register of December 19, 1979 (44 F.R. 75242).

By order of the Commission.

Issued: June 18, 1980.

KENNETH R. MASON,
Secretary.

Investigation 332-110

Study of the Economic Effects of the Eruption of Mount St. Helens

AGENCY: U.S. International Trade Commission.

ACTION: At the request of the Committee on Ways and Means, U.S. House of Representatives, and in accordance with the provisions of section 332 of the Tariff Act of 1930, as amended, the Commission has instituted investigation No. 332-110, for the purpose of studying the economic effects of the eruption of Mount St. Helens on the Pacific Northwest and on the United States. The report will include information on:

(1) The effect on imports and exports;

(2) The effect on agricultural production and marketing and on manufacturing and investment;

(3) The effect on the transportation system; and

(4) Any long-term detrimental effect to the inhabitants of the region and to the ecosystem.

To the extent feasible, the Commission intends to use such data as are available from other Federal agencies, so as to avoid duplication.

EFFECTIVE DATE: June 18, 1980.

FOR FURTHER INFORMATION CONTACT: Mr. Lowell Grant, or Mr. Edward Furlow, Agriculture, Fisheries, and Forest Products Division, U.S. International Trade Commission, Washington, D.C. 20436; telephone 202-523-0035 or 202-523-0234.

WRITTEN SUBMISSIONS

Since there will be no public hearing scheduled for this study, written submissions are invited from interested parties concerning any phase of the study. Commercial or financial information which a submitter desires the Commission to treat as confidential must be submitted on separate sheets of paper, each clearly marked "Confidential Business Information" at the top. All submissions requesting confidential treatment must conform with the requirements of section 201.6 of the Commission's Rules of Practice and Procedure (19 CFR 201.6). All written submissions, except for confidential business information, will be made available for inspection by interested persons. To be insured of consideration by the Commission in this study, written statements should be submitted at the earliest practicable date, but no later than August 1, 1980. All submissions should be

addressed to the Secretary at the Commission's office in Washington, D.C. 20436.

By Order of the Commission.

Issued: June 18, 1980.

KENNETH R. MASON,
Secretary.

Index

U.S. Customs Service

Treasury decisions:

	T.D. No.
Port of entry, Huntsville, Ala., Customs Regulations amended	80-176
Synopsis of drawback decisions	80-175
Drinks, soft	80-175-A
Vinyon staple fibers	80-175-B
Titanium baskets, heating and cooling coils; anodizing rack systems and shell and heat tube exchangers	80-175-C
Valve, safety relief	80-175-D
Adipic acid	80-175-E
Tires rubber pneumatic and rayon tire cord fabric	80-175-F
Tire ply wire, treated	80-175-G
Cookies and fruit bars	80-175-H
Piece goods, dyed or undyed nylon, polyester, acetate or blended	80-175-I
Additives, lubricant	80-175-K
Ingots, bismuth alloy	80-175-L
Data disc packs, cartridges, single disc media	80-175-M
Semiconductor wafers	80-175-N
Acrilan acrylic polymer and acrilan acrylic fiber	80-175-O
Avadex BW granular herbicide	80-175-P
Beverages, still or carbonated	80-175-Q
Corrugated shipping containers	80-175-R
Resins, ion exchange	80-175-S
Stam	80-175-T
Plasticizers and syntans (orotans)	80-175-U
Surfactants and hyamines	80-175-V
Plexiglass molding powder	80-175-W
Plexiglass sheet	80-175-X
Electrodes, arc welding	80-175-Y
Magazines	80-175-Z

Decisions of the United States Court of Customs and Patent Appeals:

	C.A.D. No.
Mattel, Inc. v. *The United States*, No. 79-28; *The United States* v. *Mattel, Inc*	1248

U.S. GOVERNMENT PRINTING OFFICE : 1980 O - 322-275

JUL 18 1980
322.376 Item 950-D T 1.11/3:14/29
377 & contin

Customs Bulletin

Regulations, Rulings, Decisions, and Notices concerning Customs and related matters

and Decisions

of the United States Court of Customs and Patent Appeals and the United States Customs Court

9247

Vol. 14 JULY 16, 1980 No. 29

This issue contains

T.D. 80–177 through 80–182
General Notice
C.A.D. 1249
Protest abstracts P80/92 through P80/107
Reap. abstracts R80/178 through R80/203
International Trade Commission Notices

THE DEPARTMENT OF THE TREASURY
U.S. Customs Service

N.N.

NOTICE

The abstracts, rulings, and notices which are issued weekly by the U.S. Customs Service are subject to correction for typographical or other printing errors. Users may notify the U.S. Customs Service, Logistics Management Division, Washington, D.C. 20229, of any such errors in order that corrections may be made before the bound volumes are published.

For sale by the Superintendent of Documents, U.S. Government Printing Office, Washington, D.C. 20402. Price: $2.25 (single copy domestic); $2.85 (single copy foreign). Subscription price: $85.00 a year domestic; $106.25 a year foreign.

U.S. Customs Service

Treasury Decisions

(T.D. 80-177)

Foreign Currencies—Daily Rates for Countries Not On Quarterly List

Rates of exchange based on rates certified to the Secretary of the Treasury by the Federal Reserve Bank of New York for the Brazil cruzeiro, People's Republic of China yuan, Hong Kong dollar, Iran rial, Philippines peso, Singapore dollar, Thailand baht (tical), and Venezuela bolivar

The Federal Reserve Bank of New York, pursuant to section 522(c), Tariff Act of 1930, as amended (31 U.S.C. 372(c)), has certified buying rates for the dates and foreign currencies shown below. The rates of exchange, based on these buying rates, are published for the information and use of Customs officers and others concerned pursuant to part 159, subpart C, Customs Regulations (19 CFR 159, subpart C).

Brazil cruzeiro:	
June 9–13, 1980	$0.0197
People's Republic of China yuan:	
June 9–10, 1980	$0.677920
June 11–13, 1980	.681989
Hong Kong dollar:	
June 9, 1980	$0.203335
June 10, 1980	.203459
June 11, 1980	.203832
June 12–13, 1980	.203728
Iran rial:	
June 9–13, 1980	Not available
Philippines peso:	
June 9–13, 1980	$0.1345
Singapore dollar:	
June 9, 1980	$0.471032
June 10, 1980	.472367
June 11, 1980	.470256
June 12, 1980	.470921
June 13, 1980	.473373

Thailand baht (tical):

June 9–13, 1980	$0.0490

Venezuela bolivar:

June 9–13, 1980	$0.2329

(LIQ-3-TRODE)
Dated: June 23, 1980.

G. SCOTT SHREVE
(For Chester R. Krayton,
Director, Duty Assessment Division).

(T.D. 80–178)

Foreign Currencies—Variances From Quarterly Rate

Rates of exchange based upon rates certified to the Secretary of the Treasury by the Federal Reserve Bank of New York

The following rates of exchange are based upon rates certified to the Secretary of the Treasury by the Federal Reserve Bank of New York, pursuant to section 522(c), Tariff Act of 1930, as amended (31 U.S.C. 372(c)), and reflect variances of 5 per centum or more from the quarterly rate published in T.D. 80–103 for the following countries. Therefore, as to entries covering merchandise exported on the dates listed, whenever it is necessary for Customs purposes to convert such currency into currency of the United States, conversion shall be at the following rates:

Australia dollar:

June 9, 1980	$1.1537
June 10, 1980	1.1536
June 11, 1980	1.1540
June 12, 1980	1.1543
June 13, 1980	1.1565

Austria schilling:

June 9–10, 1980	$0.079491
June 11, 1980	.079554
June 12, 1980	.079491
June 13, 1980	.080064

Belgium franc:

June 9–10, 1980	$0.035336
June 11, 1980	.035361
June 12, 1980	.035398
June 13, 1980	.035562

Denmark krone:

June 9, 1980	$0.182548
June 10, 1980	.182732
June 11, 1980	.182448
June 12, 1980	.182216
June 13, 1980	.183184

Finland markka:

June 9, 1980	$0.274801
June 10, 1980	.275368
June 11, 1980	.274273
June 12, 1980	.274424
June 13, 1980	.275862

France franc:

June 9, 1980	$0.243576
June 10, 1980	.243665
June 11, 1980	.243309
June 12, 1980	.243220
June 13, 1980	.244051

Germany deutsche mark:

June 9, 1980	$0.567472
June 10, 1980	.567601
June 11, 1980	.566412
June 12, 1980	.567118
June 13, 1980	.569801

India rupee:

June 9, 1980	$0.1278
June 10–11, 1980	.1274
June 12–13, 1980	.1279

Ireland pound:

June 9, 1980	$2.1075
June 10, 1980	2.1095
June 11, 1980	2.1070
June 12, 1980	2.1090
June 13, 1980	2.1215

Italy lira:

June 9, 1980	$0.001203
June 10, 1980	.001202
June 11, 1980	.001201
June 12, 1980	.001200
June 13, 1980	.001206

Japan yen:	
June 9, 1980	$0.004622
June 10, 1980	.004634
June 11, 1980	.004592
June 12, 1980	.004619
June 13, 1980	.004630
Malaysia dollar:	
June 9, 1980	$0.466418
June 10, 1980	.468055
June 11, 1980	.467290
June 12, 1980	.467508
June 13, 1980	.470035
Netherlands guilder:	
June 9, 1980	$0.517063
June 10, 1980	.517598
June 11, 1980	.516396
June 12, 1980	.516929
June 13, 1980	.519615
New Zealand dollar:	
June 9, 1980	$0.9905
June 10, 1980	.9880
June 11–12, 1980	.9890
June 13, 1980	.9910
Norway krone:	
June 9, 1980	$0.206548
June 10, 1980	.206484
June 11, 1980	.206164
June 12, 1980	.206356
June 13, 1980	.207039
Portugal escudo:	
June 9–10, 1980	$0.020471
June 11, 1980	.020429
June 12, 1980	.020408
June 13, 1980	.020500
Spain peseta:	
June 9, 1980	$0.014341
June 10, 1980	.014329
June 11, 1980	.014273
June 12, 1980	(1)
June 13, 1980	.014296

Sweden krona:	
June 9, 1980	$0.240269
June 10, 1980	.240385
June 11, 1980	.230038
June 12, 1980	.240211
June 13, 1980	.241546
Switzerland franc:	
June 9–10, 1980	$0.616333
June 11, 1980	.613874
June 12, 1980	.615764
June 13, 1980	.619771
United Kingdom pound:	
June 9, 1980	$2.3505
June 10, 1980	2.3327
June 11, 1980	2.3348
June 12, 1980	2.3385
June 13, 1980	2.3425

[1] Rate did not vary this date. Use quarterly rate.

(LIQ-3-TRODE)
Dated: June 23, 1980.

G. SCOTT SHREVE
(For Chester R. Krayton,
Duty Assessment Division).

(T.D. 80-179)

Personal Declarations and Exemptions—Customs Regulations Amended

Metric conversion of quantities of merchandise which may be included in an individual's personal exemption; part 148, Customs Regulations, amended

TITLE 19—CUSTOMS DUTIES

CHAPTER I—U.S. CUSTOMS SERVICE

PART 148—PERSONAL DECLARATIONS AND EXEMPTIONS

AGENCY: U.S. Customs Service, Department of the Treasury.

ACTION: Final rule.

SUMMARY: This document amends the Customs Regulations to reflect conversion to the metric system of measurement of quantities

of merchandise which may be included in the personal exemption from the payment of Customs duties and internal revenue taxes accorded individuals entering the United States. These changes are required in part by Public Law 95–410, the Customs Procedural Reform and Simplification Act of 1978, which, among other things, amended various item numbers of the Tariff Schedules of the United States to accomplish the conversion to the metric system. To ensure uniformity, certain other changes are made to reflect metric conversions not required specifically by Public Law 95–410. The amendments are not considered to be significant.

EFFECTIVE DATE: August 16, 1980.

FOR FURTHER INFORMATION CONTACT: Benjamin H. Mahoney, Entry Procedures and Penalties Division, Office of Regulations and Rulings, U.S. Customs Service, 1301 Constitution Avenue NW., Washington, D.C. 20229; 202–566–5778.

SUPPLEMENTARY INFORMATION:

BACKGROUND

Section 202 of Public Law 95–410, the Customs Procedural Reform and Simplification Act of 1978, in part amended schedule 8, Tariff Schedules of the United States (19 U.S.C. 1202) (the TSUS), to convert to the metric system of measurement the volume and weight of alcoholic beverages and tobacco products to which an exemption from Customs duties and internal revenue taxes is accorded individuals entering the United States. As of January 1, 1980, the regulations of the Bureau of Alcohol, Tobacco and Firearms (27 CFR, part 5) require containers of distilled spirits to be in metric sizes.

T.D. 78–394, published in the Federal Register on October 25, 1978 (43 F.R. 49784), amended the Customs Regulations (19 CFR, chapter I) to implement provisions of section 202 of Public Law 95–410 which are nonmetric in nature or which are not considered as metric changes. Additional amendments are needed to reflect the provisions of section 202 which are metric.

STATUTORY CHANGES

The following changes in schedule 8, TSUS, made by section 202 of Public Law 95–410, require amendments to the Customs Regulations:

(1) Item 812.20 was amended by substituting "2 kilograms" for "3 pounds" and by substituting "1 liter" for "1 quart."

(2) Item 813.30 was amended by substituting "1 liter" for "1 quart."

(3) Item 813.31 was amended by substituting "4 liters" for "1 wine gallon" and by substituting "1 liter" for "1 quart."

(4) Item 814.00 was amended by substituting "2 kilograms" for "3 pounds" and by substituting "1 liter" for "1 quart."

(5) Item 860.10 was amended by substituting "300 milliliters" for "8 ounces," by substituting "150 milliliters" for "4 ounces," and by substituting "100 milliliters" for "2 ounces."

(6) Item 860.20 was amended by substituting "3.5 grams" for "⅛ ounce" each place that it appears.

REQUIRED AMENDMENTS

To implement the statutory changes, the following sections of part 148, Customs Regulations (19 CFR, part 148), are being amended:

1. Section 148.33(d)(3), relating to the amount of alcoholic beverages which may be included in the personal exemption of a returning resident;

2. Section 148.43(a), relating to the amount of tobacco products and alcoholic beverages which may be brought in by an adult nonresident if for personal, rather than commercial use, and not to be given to another person; and

3. Section 148.63(a)(4), relating to the amount of tobacco products and alcoholic beverages which may be in the possession of, and exclusively used, by vessel, vehicle, or aircraft crewmembers while on temporary leave from their vessel, vehicle, or aircraft.

ADDITIONAL AMENDMENTS

Additionally, although not specifically identified in section 202 of Public Law 95–410, metric conversions in the same ratio as those set forth in section 292 are being made to the following sections of part 148:

1. Sections 148.51(b)(2) (iii) and (iv), relating to the limits on the amounts of alcoholic beverages and alcoholic perfumery a resident or nonresident arriving in the United States may bring in exempt from duty and internal revenue tax under section 321(a)(2)(B), Tariff Act of 1930, as amended (19 U.S.C. 1321(a)(2)(B)).

2. Sections 148.64(b)(2) (iii) and (iv), relating to the limit on the amount of alcoholic beverages and alcoholic perfumery a crewmember arriving in the United States may bring in exempt from duty and internal revenue tax under 19 U.S.C. 1321(a)(2)(B).

3. The introductory paragraph of section 148.74(c), and section 148.74(c)(2), relating to the limit on the amount of alcoholic beverages which may be accorded free entry if brought into the United States by military and civilian employees of the United States and evacuees.

INAPPLICABILITY OF PUBLIC NOTICE REQUIREMENTS

These are minor amendments which merely implement statutory requirements and minor technical conforming amendments. They are of particular interest to only a limited segment of the general public.

Therefore, pursuant to 5 U.S.C. 553(b)(B), notice and public participation are considered to be unnecessary.

INAPPLICABILITY OF EXECUTIVE ORDER 12044

This document is not subject to the Treasury Department directive of November 8, 1978 (43 F.R. 52120), implementing Executive Order 12044, Improving Government Regulations, because the amendments were in process before May 22, 1978, the effective date of the directive.

DRAFTING INFORMATION

The principal author of this document was Charles D. Ressin, Regulations and Research Division, Office of Regulations and Rulings, U.S. Customs Service. However, personnel from other Customs offices participated in its development.

AMENDMENTS TO THE REGULATIONS

Part 148, Customs Regulations (19 CFR 148), is amended in the following manner:

PART 148—PERSONAL DECLARATIONS AND EXEMPTIONS

1. Section 148.33(d)(3) is amended by substituting "1 liter" for "1 quart" in the first and second sentences, and "4 liters" for "1 wine gallon" in the second sentence.

2. Section 148.43(a) is amended by substituting "2 kilograms" for "3 pounds" in the first sentence, and "1 liter" for "1 quart" in the first and third sentences.

3. Sections 148.51(b)(2) (iii) and (iv) are amended by substituting "150 milliliters" for "4 ounces."

4. Section 148.63(a)(4) is amended by substituting "2 kilograms" for "3 pounds" and "1 liter" for "1 quart."

5. Sections 148.64(b)(2) (iii) and (iv) are amended by substituting "150 milliliters" for "4 ounces."

6. The introductory paragraph of section 148.74(c) is amended by substituting "4 liters" for "1 wine gallon."

7. Section 148.74(c)(2) is amended by substituting "1 liter" for "1 quart."

(R.S. 251, as amended, sec. 624, 46 Stat. 759, sec. 7, 52 Stat. 1081, item 817.00, Tariff Schedules of the United States, 92 Stat. 888 (19 U.S.C. 66, 1202, 1321, 1624, sec. 202, Public Law 95-410).)

R. E. CHASEN,
Commissioner of Customs.

Approved: June 6, 1980.

RICHARD J. DAVIS,
Assistant Secretary of the Treasury.

[Published in the Federal Register July 7, 1980, (45 F.R. 45579)]

(T.D. 80–180)

Clarification of Port Limits of Denver, Colo., Port of Entry; Section 101.3, Customs Regulations, Amended

TITLE 19—CUSTOMS DUTIES

CHAPTER I—U.S. CUSTOMS SERVICE

PART 101—GENERAL PROVISIONS

AGENCY: U.S. Customs Service, Department of the Treasury.

ACTION: Final rule.

SUMMARY: Unlike for many ports of entry, there is no reference in the Customs Regulations to an official description of the geographical boundaries of the existing Customs port of entry of Denver, Colo. Customs has been requested by the State of Colorado to publish the boundaries of the port as they are generally recognized. This document amends the Customs Regulations to clarify that the port limits include all the territory within the corporate limits of the city of Denver, Colo., and part of Adams County, Colo., lying immediately north of the corporate limits of Denver.

EFFECTIVE DATE: July 7, 1980.

FOR FURTHER INFORMATION CONTACT: Richard C. Coleman, Office of Inspection, U.S. Customs Service, 1301 Constitution Avenue NW., Washington, D.C. 20229; 202–566–5354.

SUPPLEMENTARY INFORMATION:

BACKGROUND

The President's Message to Congress of March 3, 1913 (note following 19 U.S.C. 1), which transmitted a plan of reorganization of the Customs Service, provided that in place of all existing Customs collection districts and ports, there would be 49 specified Customs collection districts and ports. The district of Colorado, to include all of the State of Colorado, with district headquarters at Denver, in in which Denver is the port of entry, is shown as the 47th Customs collection district. However, no geographical description of the port is included in the document. Furthermore, Customs is unable to find any other reference to an official description of the geographical boundaries of the port.

The State of Colorado is considering establishing a foreign-trade zone within the State. The zone is required by section 2, Foreign Trade Zones Act of 1934, as amended (19 U.S.C. 81b), to be located in or

adjacent to a Customs port of entry. In order that the State of Colorado may comply with the statute, it has requested Customs to make an official determination of the actual boundaries of the Denver, Colo., port of entry (region VI).

Customs determined that the port boundaries should be those generally recognized by Customs personnel in Denver and at the Regional Headquarters in Houston, Tex. A notice was published in the Federal Register on September 19, 1979 (44 F.R. 54311), proposing the geographical boundaries of the Denver port of entry to include:

> The territory within the corporate limits of the city of Denver, Colo., and that part of Adams County, Colo., lying immediately north of the corporate limits of Denver, bounded on the west by Pecos Street, on the north by 64th Avenue, and on the east by Quebec Street.

Interested parties were given until November 19, 1979, to submit comments concerning the proposal. No comments were received in response to the notice.

INAPPLICABILITY OF DELAYED EFFECTIVE DATE PROVISION

This amendment clarifies that the geographical boundaries of the existing Customs port of entry of Denver, Colo., are those generally recognized by Customs personnel. The amendment is merely technical and is a matter in which the public is not particularly interested. Accordingly, pursuant to 5 U.S.C. 553(d)(3), a delayed effective date is not required.

CHANGE IN THE CUSTOMS FIELD ORGANIZATION

Under the authority vested in the President by section 1 of the act of August 1, 1914, 38 Stat. 623, as amended (19 U.S.C. 2), and delegated to the Secretary of the Treasury by Executive Order No. 10289, September 17, 1951 (3 CFR, 1949–53 Comp., ch. II), and pursuant to authority provided by Treasury Department order No. 101–5 (44 F.R. 31057), the geographical boundaries of the Denver, Colo., port of entry include:

> The territory within the corporate limits of the city of Denver, Colo., and that part of Adams County, Colo., lying immediately north of the corporate limits of Denver, bounded on the west by Pecos Street, on the north by 64th Avenue, and on the east by Quebec Street.

AMENDMENT TO THE REGULATIONS

To reflect this action, the list of Customs regions, districts and ports of entry in section 101.3(b), Customs Regulations (19 CFR 101.3(b), is amended by adding "(T.D. 80–180)" following "Denver, Colo." in

the column headed "Ports of entry" in the El Paso, Tex., Customs district (region VI).

REGULATION DETERMINED TO BE NONSIGNIFICANT

In a directive published in the Federal Register on November 8, 1978 (43 F.R. 52120), implementing Executive Order 12044, Improving Government Regulations, the Treasury Department stated that it considers each regulation or amendment to an existing regulation published in the Federal Register and codified in the Code of Federal Regulations to be significant.

However, regulations of this nature, which are nonsubstantive, are essentially procedural, do not materially change existing or establish new policy, and do not impose substantial additional requirements or costs on, or substantially alter the legal rights or obligations of, those affected, may, with Secretarial approval, be determined not to be significant. Accordingly, it has been determined that this amendment does not meet the Treasury Department criteria in the directive for significant regulations.

DRAFTING INFORMATION

The principal author of this document was Lawrence P. Dunham, Regulations and Research Division, Office of Regulations and Rulings, U.S. Customs Service. However, personnel from other Customs offices participated in its development.

Dated: June 25, 1980.

RICHARD J. DAVIS,
Assistant Secretary of the Treasury.

[Published in the Federal Register July 7, 1980 (45 F.R. 45578)]

(T.D. 80-181)

Foreign Currencies—Daily Rates for Countries Not on Quarterly List

Rates of exchange based on rates certified to the Secretary of the Treasury by the Federal Reserve Bank of New York for the Brazil cruzeiro, People's Republic of China yuan, Hong Kong dollar, Iran rial, Philippines peso, Singapore dollar, Thialand baht (tical), and Venezuela bolivar

The Federal Reserve Bank of New York, pursuant to section 522(c), Tariff Act of 1930, as amended (31 U.S.C. 372(c)), has certified buying rates for the dates and foreign currencies shown below. The rates of exchange, based on these buying rates, are published for the information and use of Customs officers and others concerned pursuant to part 159, subpart C, Customs Regulations (19 CFR 159, subpart C).

Brazil cruzeiro:

June 16–20, 1980 ..... $0.0197

322-276 O - 80 - 2

People's Republic of China yuan:	
June 16–17, 1980	$0.685448
June 18–20, 1980	.682687
Hong Kong dollar:	
June 16, 1980	$0.203583
June 17, 1980	.203459
June 18, 1980	.203293
June 19, 1980	.203252
June 20, 1980	.203046
Iran rial	
June 16–20, 1980	Not available
Philippines peso:	
June 16–20, 1980	$0.1345
Singapore dollar:	
June 16, 1980	$0.471921
June 17, 1980	.470810
June 18, 1980	.471698
June 19, 1980	.472144
June 20, 1980	.472590
Thialand baht (tical):	
June 16–20, 1980	$0.0490
Venezuela bolivar:	
June 16–20, 1980	$0.2329

(LIG-3-TRODE)

Dated: June 30, 1980.

G. Scott Shreve
(For Chester R. Krayton,
Director, Duty Assessment Division).

(T.D. 80-182)

Foreign Currencies—Variances From Quarterly Rate

Rates of exchange based upon rates certified to the Secretary of the Treasury by the Federal Reserve Bank of New York

The following rates of exchange are based upon rates certified to the Secretary of the Treasury by the Federal Reserve Bank of New York, pursuant to section 522(c), Tariff Act of 1930, as amended (31 U.S.C. 372(c)), and reflect variances of 5 per centum or more from the quarterly rate published in T.D. 80-103 for the following countries. Therefore, as to entries covering merchandise exported on the dates

listed, whenever it is necessary for Customs purposes to convert such currency into currency of the United States, conversion shall be at the following rates:

Australia dollar:	
June 16, 1980	$1.1565
June 17, 1980	1.1555
June 18, 1980	1.1565
June 19, 1980	1.1553
June 20, 1980	1.1552
Austria schilling:	
June 16, 1980	$0.079554
June 17, 1980	.079365
June 18, 1980	.079554
June 19–20, 1980	.079428
Belgium franc:	
June 16–17, 1980	$0.035361
June 18, 1980	.035486
June 19, 1980	.035373
June 20, 1980	.035323
Denmark krone:	
June 16, 1980	$0.182815
June 17, 1980	.182315
June 18, 1980	.182715
June 19, 1980	.182216
June 20, 1980	.182249
Finland markka:	
June 16, 1980	$0.275103
June 17, 1980	.274574
June 18, 1980	.275103
June 19, 1980	.274574
June 20, 1980	.274424
France franc:	
June 16, 1980	$0.243013
June 17, 1980	.242895
June 18, 1980	.243784
June 19, 1980	.243398
June 20, 1980	.243309
Germany deutsche mark:	
June 16, 1980	$0.565707
June 17, 1980	.565835
June 18, 1980	.567022
June 19, 1980	.565931
June 20, 1980	.565675

India rupee:	
June 16, 1980	$0.1277
June 17–18, 1980	.1274
June 19, 1980	.1267
June 20, 1980	.1271
Ireland pound:	
June 16, 1980	$2.1175
June 17, 1980	2.1170
June 18, 1980	2.1320
June 19, 1980	2.1210
June 20, 1980	2.1165
Italy lira:	
June 16, 1980	$0.001199
June 17, 1980	.001197
June 18, 1980	.001199
June 19, 1980	.001197
June 20, 1980	.001195
Japan yen:	
June 16–17, 1980	$0.004630
June 18, 1980	.004635
June 19, 1980	.004622
June 20, 1980	.004604
Malaysia dollar:	
June 16, 1980	$0.467727
June 17, 1980	.467181
June 18, 1980	.467290
June 19–20, 1980	.467508
Netherlands guilder:	
June 16, 1980	$0.516129
June 17, 1980	.517063
June 18, 1980	.518269
June 19, 1980	.516796
June 20, 1980	.515730
Norway krone:	
June 16, 1980	$0.206548
June 17, 1980	.206016
June 18, 1980	.206356
June 19, 1980	.206398
June 20, 1980	.205846

Portugal escudo:	
June 16, 1980	$0.020471
June 17, 1980	.020408
June 18, 1980	.020437
June 19, 1980	.020367
June 20, 1980	.020396
Spain peseta:	
June 16, 1980	$0.014273
June 17, 1980	([1])
June 18, 1980	.014273
June 19, 1980	([1])
June 20, 1980	([1])
Sweden krona:	
June 16, 1980	$0.240761
June 17, 1980	.239837
June 18, 1980	.240385
June 19, 1980	.239981
June 20, 1980	.240154
Switzerland franc:	
June 16, 1980	$0.611995
June 17, 1980	.613497
June 18, 1980	.616143
June 19, 1980	.610501
June 20, 1980	.612745
United Kingdom pound:	
June 16, 1980	$2.3405
June 17, 1980	2.3306
June 18, 1980	2.3323
June 19, 1980	2.3355
June 20, 1980	2.3350

[1] Rate did not vary this date. Use quarterly rate.

(LIQ-3-TRODE)

Dated: June 30, 1980.

G. Scott Shreve
(For Chester R. Krayton,
Duty Assessment Division).

U.S. Customs Service

General Notices

(TMK-2-RRUEE)

Washington Stove Works

Notice of application for recordation of trade name

Application has been filed pursuant to section 133.12, Customs Regulations (19 CFR 133.12), for recordation under section 42 of the act of July 5, 1946, as amended (15 U.S.C. 1124) of the trade name Washington Stove Works used by Washington Stove Works, a corporation organized under the laws of the State of Washington, located at 3402 Smith, Everett, Wash. 98201.

The application states that the trade name is applied to freestanding fireplaces, wood heaters, marine ranges, cook stoves, both oil and wood/coal manufactured in Yugoslavia.

The application states further that no foreign firm is authorized to use the trade name sought to be recorded. Appropriate accompanying papers were submitted with the application.

Before final action is taken on the application, consideration will be given to any relevant data, views, or arguments submitted in writing by any person in opposition to the recordation of this trade name. Any such submission should be addressed to the Commissioner of Customs, Washington, D.C. 20229, in time to be received not later than 30 days from the date of publication of this notice in the Federal Register.

Notice of the action taken on the application of the trade name will be published in the Federal Register.

Dated: June 26, 1980.

DONALD W. LEWIS,
Director, Office of
Regulations and Rulings.

Notice of First Set of Revised Pages to the 1979 Reprint of the Customs Regulations

The first set of revised pages to the 1979 reprint of the Customs

Regulations was distributed recently for inclusion into the looseleaf edition of the Customs Regulations.

These revised pages included amendments made by T.D. 79–1 through 79–321 (January–December 1979). However, the amendments to sections 141.61(e)(1)(i) and (f)(2) and to part 142, Customs Regulations, made by T.D. 79–221 (44 F.R. 46794, Aug. 9, 1979; Customs Bulletin, vol. 13, No. 34, Aug. 22, 1979), inadvertently were not included in the recently distributed first set of revised pages.

Users of the looseleaf regulations within the Customs Service were advised of this omission by information notice No. 80–70, issued on July 14, 1980.

The second set of revised pages, which we anticipate will be distributed in late summer 1980, will incorporate the amendments made by T.D. 79–221 and other changes made through June 1980. The 1980 edition of title 19, Code of Federal Regulations, which contains the Customs Regulations, includes the amendments made by T.D. 79–221, as well as all other changes made before April 1, 1980.

Dated: July 1, 1980.

JOHN T. ROTH,
Acting Director,
Regulations and Research Division.

(19 CFR 12.73)

Proposed Changes to the Customs Regulations Relating to the Importation of Motor Vehicles and Motor Vehicle Engines Under the Clean Air Act

AGENCY: U.S. Customs Service, Department of the Treasury.

ACTION: Proposed rule.

SUMMARY: This document proposes to amend section 12.73, Customs Regulations, relating to the importation of motor vehicles and motor vehicle engines under the Clean Air Act. Although section 12.73 currently provides a deterrent to the importation of motor vehicles and motor vehicle engines which do not conform to Federal emission standards, Customs and the Environmental Protection Agency have identified shortcomings in several areas. The proposed rule, which is not considered to be significant, is intended to improve Customs administrative and enforcement efficiency and the effectiveness of the regulations.

DATES: Comments must be received on or before 60 days from the date of publication in the Federal Register.

ADDRESS: Comments (preferably in triplicate) should be addressed to the Commissioner of Customs, attention: Regulations and Research

Division, U.S. Customs Service, 1301 Constitution Avenue NW., room 2335, Washington, D.C. 20229.

FOR FURTHER INFORMATION CONTACT: Harrison C. Feese, Entry, Examination, and Liquidation Branch, U.S. Customs Service, 1301 Constitution Avenue NW., Washington, D.C. 20229; 202–566–8651.

SUPPLEMENTARY INFORMATION:

BACKGROUND

Under section 202 of the Clean Air Act, as amended (42 U.S.C. 7521, formerly 42 U.S.C. 1857f–1) (the act), the Department of Health, Education, and Welfare and the Environmental Protection Agency (EPA) have promulgated regulations in 40 CFR, parts 85 and 86 which prescribe standards for the control of emissions from certain motor vehicles and motor vehicle engines. The importation into the United States of a vehicle or engine manufactured after the effective date of an emission control standard applicable to the vehicle or engine (or which would have been applicable had the vehicle or engine been manufactured for importation into the United States) is prohibited by the act unless the vehicle or engine is covered by a certificate of conformity with applicable standards or is exempted by the Administrator, EPA.

In conjunction with EPA, Customs enforces those laws and regulations applicable to emission controls for imported vehicles and engines. Regulations relating to those importations are found in section 12.73, Customs Regulations (19 CFR 12.73), and in the EPA regulations at 40 CFR, part 85, subpart P. EPA is proposing several major changes in its regulations. An extensive discussion of the reasons for, and the anticipated effects of, those changes is found elsewhere in this issue of the Federal Register in the preamble to the proposed revision of the EPA regulations. If adopted, the revision to the EPA regulations would require corresponding changes to section 12.73, Customs Regulations.

If a vehicle or engine now fails to comply with emission standards, an importer may post a bond with Customs and bring the vehicle or engine into conformity within 90 days of entry. This procedure has misled some importers into believing that modification is an easy option. Likewise, although an importer may post a bond and enter a vehicle or engine to attempt to demonstrate that it conforms by subjecting it to the full federal test procedure, in some cases this is expensive and impracticable.

A substantial burden is imposed upon Customs and EPA resources in administering and enforcing present procedures. To alleviate this burden, the proposed regulations would eliminate the provisions cur-

rently found in section 12.73(c) allowing conditional importation under bond. Further, because of potential hardships, the proposed regulations would not apply to an individual who has not imported or attempted to import a nonconforming vehicle or engine since December 31, 1970, the effective date of the Clean Air Act Amendments of 1970, and who wishes to import a vehicle or engine for personal use and not for resale. The individual could utilize this exemption only once.

Very limited exemptions for national security and repairs or alterations would be added, and other exclusions and exemption in section 12.73 would be strengthened or clarified.

AUTHORITY

The authority for the proposed amendment is R.S. 251, as amended, section 484, 46 Stat. 722, as amended, 759, section 203, 79 Stat. 993, as amended; 19 U.S.C. 66, 1484, 1624, 42 U.S.C. 7522, 7601 (formerly 42 U.S.C. 1857f–2, 1857g).

COMMENTS

Before adopting this proposal, consideration will be given to any written comments timely submitted to the Commissioner of Customs. Comments submitted will be available for public inspection in accordance with section 103.8(b), Customs Regulations (19 CFR 103.8(b)), during regular business hours at the Regulations and Research Division, room 2335, Headquarters, U.S. Customs Service, 1301 Constitution Avenue NW., Washington, D.C. 20229.

INAPPLICABILITY OF EXECUTIVE ORDER 12044

This document is not subject to the Treasury Department directive of November 8, 1978 (43 F.R. 52120), implementing Executive Order 12044, Improving Government Regulations, because the proposal was in process before May 22, 1978, the effective date of the directive.

DRAFTING INFORMATION

The principal author of this document was Shannon McCarthy, Regulations and Research Division, Office of Regulations and Rulings, U.S. Customs Service. However, personnel from other Customs offices and EPA participated in its development.

PROPOSED AMENDMENT

PART 12—SPECIAL CLASSES OF MERCHANDISE

It is proposed to amend section 12.73, Customs Regulations (19 CFR 12.73), to read as follows:

322-276 O - 80 - 3

ENTRY OF MOTOR VEHICLES AND MOTOR VEHICLE ENGINES UNDER THE CLEAN AIR ACT, AS AMENDED

12.73 Federal motor vehicle air pollution control.

(a) *Standards prescribed by the Department of Health, Education, and Welfare or the Environmental Protection Agency*—(1) Certain new motor vehicles and new motor vehicle engines are subject to emission standards prescribed by the Department of Health, Education, and Welfare (HEW) or the Environmental Protection Agency (EPA) under section 202 of the Clean Air Act (42 U.S.C. 7551, formerly 42 U.S.C. 1857f–1), as set forth in 40 CRF, parts 85 and 86. EPA regulations prescribing procedures for the importation of motor vehicles and motor vehicle engines are found at 40 CFR, part 85, subpart P.

(2) For purposes of this section, "motor vehicle" means any self-propelled vehicle designed for transporting persons or property on a street or a highway. "New motor vehicle" or "new motor vehicle engine" means a motor vehicle or motor vehicle engine manufactured after the effective date of a regulation issued under section 202 of the act which is applicable to the vehicle or engine if the vehicle or engine is manufactured for importation into the United States, or which would have been applicable had the vehicle or engine been manufactured for importation into the United States.

(b) *Requirements for entry and release.*—(1) Each motor vehicle or motor vehicle engine offered for importation into the customs territory of the United States or the U.S. Virgin Islands will be refused entry and will not be released from Customs custody unless there is filed with the entry a declaration, in duplicate, signed by the importer or consignee, which declares or affirms one of the following:

(i) The motor vehicle or motor vehicle engine conforms to all applicable Federal motor vehicle emission standards because either—

(A) The 1968, 1969, or 1970 model year motor vehicle or motor vehicle engine is covered by a certificate of conformity with Federal motor vehicle emission standards, was originally manufactured in conformity with EPA or HEW regulations, and has affixed a certification label relating to safety standards, in accordance with section 114 of Public Law 89–563 (15 U.S.C. 1403), regulations issued thereunder by the Secretary of Transportation (49 CFR, parts 555, 567, 568, and 571), and the regulations in section 12.80(b)(1)(ii) of this part; or

(B) The 1971 or later model year motor vehicle or motor vehicle engine is covered by a certificate of conformity with

Federal motor vehicle emission standards, was originally manufactured in conformity with EPA regulations, and is tagged or labeled by the manufacturer in accordance with 40 CFR, parts 85 and 86.

(ii) The motor vehicle or motor vehicle engine is intended solely for export, and both the vehicle or engine and its container bear a label or tag indicating that it is intended solely for export (see 40 CFR 85.1503 and 85.1707).

(iii) The importer or consignee is a nonresident of the United States, is importing the motor vehicle or motor vehicle engine solely for personal use for a period not exceeding one year from the date of entry, and the vehicle or engine will not be sold in the United States.

(iv) The importer, consignee, or motor vehicle owner is entitled to an exemption as an individual (not a manufacturer or importer for resale) importing one motor vehicle or motor vehicle engine not covered by a certificate of conformity if both of the following criteria are met:

(A) The individual is importing or attempting to import one nonconforming motor vehicle or motor vehicle engine for the first time since December 31, 1970, and

(B) The individual is importing the motor vehicle or motor vehicle engine solely for personal use and not for resale in the United States.

(v) The importer or consignee—

(A) Is a member of the armed forces of a foreign country on assignment in the United States; a member of the secretariat of a public international organization so designated under the International Organizations Immunities Act (22 U.S.C. 288), as listed in section 148.87 of this chapter, on assignment in the United States; or a member of the personnel of a foreign government on assignment in the United States who is within the class of persons for whom free entry of vehicles has been authorized by the Department of State;

(B) Is importing the motor vehicle or motor vehicle engine for purposes other than resale; and

(C) A copy of his official orders, if any, is attached to the declaration (or, if a qualifying member of the personnel of a foreign government on assignment in the United States, the name of the embassy to which he is accredited is stated on the declaration).

(vi) The motor vehicle is a racing vehicle which meets one or more of the exclusion criteria found at 40 CFR 85.1703(a), and the vehicle will not be registered or licensed for use on, or operated

on, public roads or highways in the United States (see 40 CFR 85.1505(c)).

(vii) The motor vehicle or motor vehicle engine is one of a class of vehicles or engines for which an application for a certificate of conformity is pending before the Administrator, EPA (see 40 CFR 85.1507).

(viii) The motor vehicle or motor vehicle engine is being imported solely for one of the following purposes, subject to the conditions stated after each:

(A) Display, and will not be sold, registered or licensed for use on, or operated on, public roads or highways in the United States (see 40 CFR 85.1505(a)).

(B) Testing for a period not exceeding 1 year from the date of importation, and will not be sold, registered or licensed for use on, or operated on, public roads or highways in the United States unless such an activity is an integral part of the test and prior written approval has been obtained from the Administrator, EPA (see 40 CFR 85.1505(b), 85.1705, 85.1708).

(C) Repairs or alterations, and will not be sold, registered or licensed for use on, or operated on, public roads or highways in the United States (see 40 CFR 85.1508).

(D) National security (see 40 CFR 85.1506, 85.1702(a)(2), 85.1706).

(ix) The motor vehicle or motor vehicle engine was manufactured on a date when no applicable standards were in force. This declaration category may be used for the following:

(A) Motor vehicles manufactured before the 1968 model year.

(B) Nonchassis mounted engines to be used in the light-duty vehicles or light-duty trucks (see 40 CFR 86.077–2 and 86.079–2).

(C) Engines manufactured before January 1, 1970, for use in heavy-duty vehicles (see 40 CFR 86.077–2 and 86.079–2).

(D) Diesel-fueled light-duty vehicles or light-duty trucks manufactured before the 1975 model year.

(E) Light-duty vehicles or light-duty trucks originally manufactured to run on a fuel other than gasoline or diesel fuel.

(F) Motorcycles manufactured before January 1, 1978 (see CFR 86.401–78 and 86.402–78).

(2) Each declaration filed under paragraph (b)(1) of this section shall include the name and address in the United States of the importer

and the consignee, the date, port of entry, entry number (if applicable), make, model, and model year of the motor vehicle or motor vehicle engine, and the complete vehicle identification number of the motor vehicle, or the serial number of the motor vehicle engine (if not chassis mounted).

(c) *Waiver of declaration requirements.*—The requirement that a declaration be filed under paragraph (b) of this section as a condition to the introduction of a motor vehicle or motor vehicle engine into the customs territory of the United States or the U.S. Virgin Islands may be waived by the District Director for a nonresident regularly entering the United States by a motor vehicle at the Canadian or Mexican border who has received from the District Director an appropriate means of identification, which has been affixed to the vehicle.

(d) *Motor vehicles or motor vehicle engines denied entry.*—If a motor vehicle or motor vehicle engine is denied entry under the provisions of paragraph (b) of this section, the District Director shall refuse to release the motor vehicle or motor vehicle engine for entry into the customs territory of the United States or the U.S. Virgin Islands and shall give notice of refusal to the importer or consignee.

(e) *Detention and disposition of motor vehicles or motor vehicles engines denied entry.*—(1) *Detention by District Director.*—A motor vehicle or motor vehicle engine denied entry under paragraph (d) of this section shall be detained by the District Director at the risk and expense of the importer or consignee until the completed declaration is filed or other disposition is ordered by the Administrator, EPA. The vehicle or engine may be detained for a period not to exceed 30 days after entry, or for a period not to exceed 60 days after entry, if additional time is granted by the District Director. An importer, consignee, owner or agent requesting an extension of the 30-day period shall file an application with the District Director at the port of entry.

(2) *Disposition.*—A motor vehicle or motor vehicle engine denied entry under paragraph (d) of this section which is not disposed of by order of the Administrator, EPA shall be disposed of under applicable Customs laws and regulations. However, Customs may not dispose of the motor vehicle or motor vehicle engine in such a manner that, either directly or indirectly, an ultimate consumer is sold a new motor vehicle or new motor vehicle engine that fails to comply with applicable Federal emission control regulations.

(f) *Prohibited importations.*—The importation of a motor vehicle or motor vehicle engine, other than in accordance with this section and the importation regulations of the EPA in 40 CFR, part 85, subpart P, is prohibited unless the Administrator, EPA, grants a

specific exemption based on extreme hardship or extraordinary circumstances. (See 40 CFR 85.1511(a).)

ROBERT E. CHASEN,
Commissioner of Customs.

Approved: June 12, 1980.

RICHARD J. DAVIS,
Assistant Secretary of the Treasury.

DOUGLAS M. COSTLE,
Administrator, Environmental Protection Agency.

Decisions of the United States Court of Customs and Patent Appeals

(C.A.D. 1249)

THE UNITED STATES v. RMS ELECTRONICS, INC., No. 80–2

1. CLASSIFICATION OF IMPORTERS—UNRATED TRANSFORMERS UNDER TSUS ITEM 682.05

Customs Court decision holding that the plain meaning of TSUS item 682.05 excludes unrated transformers which, if rated, are ratable at less than 1 kva, affirmed.

2. ID—RATED TRANSFORMER

Rated transformer implies that the importer has or should have at least some knowledge of the electrical power capability of the goods prior to importation.

3. PRESUMPTION OF CORRECTNESS

Factual determinations by the Customs Court have presumption of correctness which overrides factual conclusions of Customs Service.

U.S. Court of Customs and Patent Appeals, June 26, 1980

Appeal from U.S. Customs Court, C.D. 4818

[Affirmed.]

Alice Daniel, Assistant Attorney General, *David M. Cohen*, Director, *Joseph I. Liebman*, Attorney in Charge, Field Office for Customs Litigation, *James A. Resti*, Commercial Litigation Branch.

Louis Schneider and *Herbert P. Larsen*, attorneys for Federal Pacific Electric Co. amicus curiae.

Peter Jay Baskin and *Richard M. Belanger*, attorneys for appellee.

[Oral argument on June 2, 1980 by *James A. Resti* for appellant, *Peter Jay Baskin* for appellee.]

Before MARKEY, *Chief Judge*, RICH, BALDWIN, and MILLER, *Associate Judges*, and RE, *Judge*.[1]

RICH, Judge.

This appeal is from the judgment of the United States Customs Court in *RMS Electronics, Inc.* v. *United States*, 83 Cust. Ct. 37, C.D.

[1] Hon. Edward D. Re, Chief Judge, U.S. Customs Court, sitting by designation.

4818, 480 F. Supp. 302 (1979), disapproving the original classification of the imported merchandise and holding two other classifications to be proper. We affirm.

THE IMPORTED MERCHANDISE

The imported goods are known as baluns,[2] impedance matching couplers, or matching transformers. Their main use is to match impedance between the 300-ohm twin-lead wire commonly used between television receivers and their antennas, or the TV imput connection itself, and the 75-ohm coaxial cable predominantly used in community antenna and cable television systems. If rated, the baluns are admittedly incapable of sustaining more than 1 kilovolt-ampere (kVA). One type of the imported baluns differed from the others in that it incorporated a hihg pass filter said to eliminate citizen's band radio interference from television reception.

CONTESTED STATUTORY CLASSIFICATIONS

The following provisions of the Tariff Schedules of the United States (TSUS), with rates in effect at the time of importation as modified by T.D. 68–9, are involved:

Classified under:

Generators, motors, motor-generators, convertors (rotary or static), transformers, rectifiers and rectifying apparatus, and inductors; all the foregoing which are electrical goods, and parts thereof:

Transformers:

682.05	Rated at less than 1 kva	12.5% ad val.
Claimed under:		
682.07	Other	6% ad val.

CUSTOMS COURT

The original classification under 682.05 was rejected. The lower court also rejected appellee's contention that all of the goods were dutiable under item 685.20 as television parts. Only the combined balun/filters were held to be classifiable as television parts and that holding has not been appealed. Plaintiff-appellee's alternative claim under item 682.07 was accepted for the baluns without filters.

Much of the importer's case was devoted to its attempt to persuade the court below that the baluns were not transformers. That court, noting that the goods were labeled as transformers, that they were so known in the trade, and that they conformed to dictionary definitions of transformers, rejected the contention. Finding that the TSUS pro-

[2] The IEEE Standard Dictionary of Electrical & Electronics Terms (2d ed.) defines balun as follows:
(1) A passive device having distributed electrical constants to couple a balanced system or device to an unbalanced system or device. Note: The term is derived from balance to unbalance transformer.
(2) A network for the transformation from an unbalanced transmission line or system to a balanced line or system, or vice versa.

vided for transformers eo nomine, the Customs Court held that general interpretative rule 10(ij)[3] prohibited classification as television parts. This left for decision the proper classification, whether under item 682.05 or 682.07, supra. It was held that 682.05 Transformers: Rated at less than 1 kVA, did not apply to the baluns because baluns are not the kind of transformers that are rated. Therefore, item 682.07, Other, was held to be the proper classification.

OPINION

The crux of this case, as recognized by both parties, centers on the significance of the term "rated" in TSUS item 682.05. Does rated mean capable of being rated, having been rated, or of a kind that is normally rated?

[1] We agree with the Customs Court that item 682.05 does not include unrated transformers which, if rated, would be rated at less than 1 kVA. Appellant has not shown us any reason why interpretation of the statute in accordance with its plain meaning would be either in conflict with the legislative history or inconsistent with the remainder of the statute. In the absence of ambiguity, the plain meaning prevails. *Plant Products Corp.* v. *United States*, 44 CCPA 183, C.A.D. 658 (1957).

Appellant states that transformer ratings do not require reduction to writing to render the transformers dutiable under item 682.05. But this argument ignores the use of rated instead of ratable in the statute. **[2]** While an unmarked article can have an unknown rating, clearly a rated transformer implies that the importer has or should have at least some knowledge of the electrical power capability prior to importation. The record of this case shows clearly that baluns are not transformers of a type or class in which ratings in kVA are used; they are not rated. Such rating would have no significance in the trade because they do not handle power of the magnitude which give rise to such ratings.

The confusion between the terms "rated" and "ratable" is further emphasized in considering appellant's discussion of "rated kVA," found in headnote 2, part 5, schedule 6 of TSUS.[4] The above phrase is compared by appellant to the National Electrical Manufacturers Association (NEMA) standard for transformer ratings in order to suggest that the plain meaning of "rated" was not contemplated here. But since these terms are not interchangeable, headnote 2 has no evidentiary value in establishing any ambiguity in the statute.

[3] Rule 10(ij) reads: (ij) a provision for parts of an article covers a product solely or chiefly used as a part of such article, but does not prevail over a specific provision for such part.

[4] Headnote 2 provides: "2. For the purposes of this part (item 682.05 and 682.07), the rated kVA of a transformer is the kilovolt-ampere output on a continuous duty basis at the rated secondary voltage (or amperage, when applicable and at the rated frequency without exceeding the rated temperature limitations."

Appellant's reference to the following excerpt from the 1969 Summaries of Trade and Tariff Information (Summaries) is equally irrelevant in establishing an ambiguity:

> The bulk of the power, distribution, and specialty transformers are rated at more than 1 kVA and thus are of a type provided for under item 682.07 of the TSUSA–1968. Many instrument and meter transformers and most transformers used in electronic applications would be rated (if rated in kVA) at less than 1 kVA and, consequently, are of a type provided for under item 682.05. Many specialty transformers are rated at less than 1 kVA.

Whatever guidance the Summaries may provide with respect to the state of the domestic industry at the time of the Kennedy Round and the subsequent substitution of items 682.05 and 682.07 for former item 682.10,[5] it is meaningless here since the passage is directed towards rated transformers. Rated transformers are segregated by the 1-kVA level regardless of application, but that does not make item 682.05 applicable to transformers of a type which nobody rates with respect to power-handling capacity.

Appellant suggests that affirmance of the decision below would lead to an absurd or anomalous result. A scenario is painted wherein an importer could obtain the lower rate of duty merely by not rating ratable transformers until after importation. This does not impress us. Ratable transformers have an inherent rating, capable of determination even if the goods are not marked with any power rating; no rational businessman would buy a power transformer without knowing its rating. These baluns are not the type of transformers to which anyone assigns a power rating.

The Customs Court was manifestly correct in holding the imported baluns to be not rated and hence classifiable under item 682.07 as other transformers. Appellant contends that appellee has not overcome the presumption of correctness in the implicit fact finding by the Customs Service that the baluns were rated. [3] Not only does this argument forget that the statutory meaning of "rated" is a question of law which affects the fact finding, but it also overlooks the presumption of correctness in factual determinations by the Customs Court which overrides factual conclusions of the Customs Service. We note that Mr. Gilgenbach, appellant's own witness, declared that he had never seen kVA ratings for the goods in question, nor had the commercial trade ever rated baluns. The factual determination by the Customs Court concerning unrated baluns is supported by substantial evidence.

Accordingly, the judgment of the Customs Court is *affirmed*.

---

[5] TSUS item 682.10 was applicable to all imported transformers regardless of whether they were rated. Pursuant to Presidential Proclamation 3822, 82 Stat. 1455 (Kennedy Round) this item was replaced on Jan. 1, 1968, by the present items 682.05 and 682.07.

Decisions of the United States Customs Court

United States Customs Court

One Federal Plaza
New York, N.Y. 10007

Chief Judge

Edward D. Re

Judges

Paul P. Rao
Morgan Ford
Scovel Richardson
Frederick Landis
James L. Watson
Herbert N. Maletz
Bernard Newman
Nils A. Boe

Senior Judge

Samuel M. Rosenstein

Clerk

Joseph E. Lombardi

Abstracts

Abstracted Protest Decision

DEPARTMENT OF THE TREASURY, *June 23, 1980.*

The following abstracts of decisions of the United States Customs Court at New York are published for the information and guidance of officers of the customs and others concerned. Although the decisions are not of sufficient general interest to print in full, the summary herein will be of assistance to customs officials in easily locating cases and tracing important facts.

ROBERT E. CHASEN,
Commissioner of Customs.

DECISION NUMBER	JUDGE & DATE OF DECISION	PLAINTIFF	COURT NO.	ASSESSED	HELD	BASIS	PORT OF ENTRY AND MERCHANDISE
				Par. or Item No. and Rate	Par. or Item No. and Rate		
P80/92	Maletz, J. June 19, 1980	Shayne Knitwear, Inc.	75-7-01895	Item 382.78 25¢ per lb. + 32.5% (blouses and pants) Item 791.75 6% (jackets)	Item 791.75 6% Dutiable as entireties on basis of export value; said value is invoice unit price	J. C. Penney Purchasing Corporation v. U.S. (C.D. 4671)	New York Ladies 3-piece suits; entireties
P80/93	Ford, J. June 19, 1980	Camel Manufacturing Co.	77-12-04903	Item 338.30 13¢ per lb. + 22.5%	Item 355.82 12.5¢ per lb. + 15%	H. Rosenthal Co. v. U.S. (C.D. 4769, aff'd C.A.D. 1236)	San Juan Coated nylon taffeta
P80/94	Ford, J. June 19, 1980	Camel Manufacturing Co.	79-4-00717	Item 338.30 13¢ per lb. + 22.5%	Item 355.82 12.5¢ per lb. + 15%	H. Rosenthal Co. v. U.S. (C.D. 4769, aff'd C.A.D. 1236)	Charleston, S.C. Coated nylon taffeta
P80/95	Ford, J. June 19, 1980	H. Rosenthal Co.	77-1-00018	Item 380.84 25¢ per lb. + 27.5%	Item 376.56 16.5%	H. Rosenthal Co. v. U.S. (C.D. 4769, aff'd C.A.D. 1236)	Minneapolis Men's and boy's parkas
P80/96	Maletz, J. 1980	Adolco Trading Co., Inc.	78-6-01167	Item 389.60 25¢ per lb. + 15%	Item 386.08 25%	Agreed statement of facts	New York Net shopping bags
P80/97	Maletz, J. June 19, 1980	John V. Carr & Son, Inc.; Paccar Inc., d/b/a Dynacraft Company	77-11-04638	Item 772.65 4%	Item 772.66 Free of duty	John V. Carr & Son, Inc., et al. v. U.S. (C.D. 4652)	Port Huron (Detroit) Various types of hose; Canadian articles and original motor-vehicle equipment

P80/98	Maletz, J. June 19, 1980	K Mart Corporation	79-5-00817	Item 654.20 8.5%	Item A654.20 Free of duty pursuant to General Headnote 3(c), TSUS; title V, Trade Act of 1974, and Ex. Order 11888 of 11-26-75	Agreed statement of facts	Newark (New York) Musical jewelry boxes produced within Taiwan
P80/99	Maletz, J. June 19, 1980	S. S. Kresge Co.	78-3-00514	Item 737.95 17.5%	Item A737.15 Free of duty pursuant to General Headnote 3(c), TSUS; title V, Trade Act of 1974, and Ex. Order 11888 of 11-26-75	Agreed statement of facts	Longview (Portland, Oreg.) Models of trucks, tractors, cars, etc., to a scale larger than 1 to 85, produced within Hong Kong
P80/100	Maletz, J. June 19, 1980	Pharmacia Inc.	79-12-01786	Item 711.88 or 712.49 11% or 10%	Item 678.50 5%	Agreed statement of facts	New York Gradient mixers (mixing devices for liquids)
P80/101	Re, C.J. June 20, 1980	Bar-Zel Expediters, a/c Grandoe Corp.	77-9-03067	Item 705.35 15%	Item 734.97 9%	Stonewall Trading Co. v. U.S. (C.D. 4023)	New York Ski gloves, ski mitts, or ski mittens
P80/102	Ford, J. June 20, 1980	A. Sajet, Inc., et al.	70/40247, etc.	Item 653.40 (pre-1968) 19% Item 653.37 17% and 15% Item 653.30 19%	Item 653.35 10.5%, 9% or 8%	U.S. v. Morris Friedman & Co. (C.A.D.'s 1156, 1157)	New York Brass candlesticks, etc.

P80/103	Richardson, J. June 20, 1980	Alltransport, Inc.	77-12-04864	Item 708.89 22.5%	Item 708.80 15%	Wild Heerbrugg Instruments, Inc. v. U.S. (C.D. 4767)	New York Microscopy phototubes
P80/104	Richardson, J. June 20, 1980	Nippon Kogaku (USA), Inc.	68/64122, etc.	Item 708.89 45%	Item 708.80 30%	Wild Heerbrugg Instruments, Inc. v. U.S. (C.D. 4767)	New York Microflex models EFM and FM-B with universal eyepiece adapter
P80/105	Maletz, J. June 20, 1980	W. R. Filbin & Company, Inc.	79-11-01729	Item 642.47 60%	Item 642.80 45%	Judgment on the pleadings	Buffalo Galvanized hex wire netting
P80/106	Maletz, J. June 20, 1980	Mitsui & Co. (USA), Inc.	78-2-00327	Item 661.90 5.5%	Item 800.00 Free of duty	Judgment on the pleadings	Los Angeles American goods returned; filtering element for a bag filter of teflon cloth
P80/107	Maletz, J. June 20, 1980	Olympia Sports Co., Inc.	79-9-01481	Item 705.85 15%	Item A735.05 Free of duty under GSP	Agreed statement of facts	New York Men's cowhide ski mittens

Decisions of the United States Customs Court

Abstracts

Abstracted Reappraisement Decisions

DECISION NUMBER	JUDGE & DATE OF DECISION	PLAINTIFF	COURT NO.	BASIS OF VALUATION	HELD VALUE	BASIS	PORT OF ENTRY AND MERCHANDISE
R80/178	Re, C.J. June 19, 1980	S. S. Kresge Co.	73-11-03191, etc.	Export value	Appraised values shown on entry papers less additions included to reflect currency revaluation	C.B.S. Imports Corp. v. U.S. (C.D. 4739)	New York Wearing apparel, etc.
R80/179	Re, C.J. June 19, 1980	S. S. Kresge Co.	76-11-02520, etc.	Export value	Appraised values shown on entry papers less additions included to reflect currency revaluation	C.B.S. Imports Corp. v. U.S. (C.D. 4739)	New York Wearing apparel, etc.
R80/180	Boe, J. June 19, 1980	Cluett Peabody, dba	76-1-00045	Constructed value Van Raalte Co., Inc.	$13,570.22—represented by cost of materials including accessories and supplies ($9,090.19), plus cost of labor ($2,411.77), plus an amount for overhead and profit ($1,929.41), plus packing ($138.85)	Agreed statement of facts	New York Gloves

DECISION NUMBER	JUDGE & DATE OF DECISION	PLAINTIFF	COURT NO.	BASIS OF VALUATION	HELD VALUE	BASIS	PORT OF ENTRY AND MERCHANDISE
R80/181	Re, C.J. June 19, 1980	Adorence Co. Inc.	76 10-02373, etc.	Export value	Various appraised values shown on entry papers less additions included in appraised values to reflect currency revaluation	C.B.S. Imports Corp. v. U.S. (C.D. 4739)	New York Miscellaneous
R80/182	Re, C.J. June 19, 1980	Holly Stores, Inc.	75-1-00039, etc.	Export value	Appraised values shown on entry papers less additions included in appraised values to reflect currency revaluation	C.B.S. Imports Corp. v. U.S. (C.D. 4739)	New York Wearing apparel, etc.
R80/183	Maletz, J. June 19, 1980	Imported Rug Associates, Ltd.	R62/11398, etc.	Export value	F.o.b. unit invoice prices plus 20% of difference between f.o.b. unit invoice prices and appraised values	Agreed statement of facts	Philadelphia Rugs
R80/184	Maletz, J. June 19, 1980	Imported Rug Associates, Ltd.	R63/1512, etc.	Export value	F.o.b. unit invoice prices plus 20% of difference between f.o.b. unit invoice prices and appraised values	Agreed statement of facts	New York Rugs
R80/185	Maletz, J. June 19, 1980	Imported Rug Associates, Ltd.	R63/3674, etc.	Export value	F.o.b. unit invoice prices plus 20% of difference between f.o.b. unit invoice prices and appraised values	Agreed statement of facts	Baltimore Rugs

R80/186	Maletz, J. June 19, 1980	Imported Rug Associates, Ltd.	R63/8881, etc.	Export value	F.o.b. unit invoice prices plus 20% of difference between f.o.b. unit invoice prices and appraised values	Agreed statement of facts	Los Angeles Rugs
R80/187	Maletz, J. June 19, 1980	Imported Rug Associates, Ltd.	R64/3520, etc.	Export value	F.o.b. unit invoice prices plus 20% of difference between f.o.b. unit invoice prices and appraised values	Agreed statement of facts	Portland, Oreg. Rugs
R80/188	Maletz, J. June 19, 1980	Imported Rug Associates, Ltd.	R64/23437, etc.	Export value	F.o.b. unit invoice prices plus 20% of difference between f.o.b. unit invoice prices and appraised values	Agreed statement of facts	Seattle Rugs
R80/189	Maletz, J. June 19, 1980	Imported Rug Associates, Ltd.	R65/4450, etc.	Export value	F.o.b. unit invoice prices plus 20% of difference between f.o.b. unit invoice prices and appraised values	Agreed statement of facts	Seattle Rugs
R80/190	Maletz, J. June 19, 1980	Imported Rug Associates, Ltd.	R65/12938, etc.	Export value	F.o.b. unit invoice prices plus 20% of difference between f.o.b. unit invoice prices and appraised values	Agreed statement of facts	Baltimore Rugs
R80/191	Maletz, J. June 19, 1980	Imported Rug Associates, Ltd.	R65/16183, etc.	Export value	F.o.b. unit invoice prices plus 20% of difference between f.o.b. unit invoice prices and appraised values	Agreed statement of facts	Portland, Oreg. Rugs

DECISION NUMBER	JUDGE & DATE OF DECISION	PLAINTIFF	COURT NO.	BASIS OF VALUATION	HELD VALUE	BASIS	PORT OF ENTRY AND MERCHANDISE
R80/192	Maletz, J. June 19, 1980	Imported Rug Associates, Ltd.	R65/16180, etc.	Export value	F.o.b. unit invoice prices plus 20% of difference between f.o.b. unit invoice prices and appraised values	Agreed statement of facts	Tampa Rugs
R80/193	Maletz, J. June 19, 1980	Imported Rug Associates, Ltd.	R65/16522, etc.	Export value	F.o.b. unit invoice prices plus 20% of difference between f.o.b. unit invoice prices and appraised values	Agreed statement of facts	Los Angeles Rugs
R80/194	Maletz, J. June 19, 1980	Imported Rug Associates, Ltd.	R65/22481, etc.	Export value	F.o.b. unit invoice prices plus 20% of difference between f.o.b. unit invoice prices and appraised values	Agreed statement of facts	Baltimore Rugs
R80/195	Meletz, J. June 19, 1980	Imported Rug Associates, Ltd.	R66/23394, etc.	Export value	F.o.b. unit invoice prices plus 20% of difference between f.o.b. unit invoice prices and appraised values	Agreed statement of facts	New York Rugs
R80/196	Maletz, J. June 20, 1980	American Thermo-Ware Co.	267404-A, etc.	Export value	Various appraised unit values less 7.5%, net packed	Agreed statement of facts	New York Binoculars
R80/197	Maletz, J. June 20, 1980	American Thermo-Ware Co.	R61/9758, etc.	Export value	F.o.b. unit invoice prices plus 20% of difference between	Agreed statement of facts	New York Binoculars

					f.o.b. unit invoice prices and appraised values		
R80/198	Maletz, J. June 20, 1980	Astra Trading Corp.	R60/2161, etc.	Export value	F.o.b. unit invoice prices plus 20% of difference between f.o.b. unit invoice prices and appraised values	Agreed statement of facts	New York Binoculars
R80/199	Maletz, J. June 20, 1980	Astra Trading Corp.	R60/18806, etc.	Export value	F.o.b. unit invoice prices plus 20% of difference between f.o.b. unit invoice prices and appraised values	Agreed statement of facts	New York Binoculars
R80/200	Maletz, J. June 20, 1980	Bruce Duncan Co., Inc., a/c Ezra Mallem & Son	R60/5437, etc.	Export value	F.o.b. unit invoice prices plus 20% of difference between f.o.b. unit invoice prices and appraised values	Agreed statement of facts	Los Angeles Rugs
R80/201	Maletz, J. June 20, 1980	Inter-Maritime Fwdg. Co., Inc.	262015-A, etc.	Export value	F.o.b. unit invoice prices plus 20% of difference between f.o.b. unit invoice prices and appraised values	Agreed statement of facts	New York Binoculars and leather cases
R80/202	Maletz, J. June 20, 1980	New York Merchandise Co., Inc.	R60/6036, etc.	Export value	F.o.b. unit invoice prices plus 20% of difference between f.o.b. unit invoice prices and appraised values	Agreed statement of facts	San Diego Rugs

DECISION NUMBER	JUDGE & DATE OF DECISION	PLAINTIFF	COURT NO.	BASIS OF VALUATION	HELD VALUE	BASIS	PORT OF ENTRY AND MERCHANDISE
R80/203	Maletz, J. June 20, 1980	Toyo Rug Co., Ltd.	R60/7237, etc.	Export value	F.o.b. unit invoice prices plus 20% of difference between f.o.b. unit invoice prices and appraised values	Agreed statement of facts	Los Angeles Rugs

ADM-8-03:RRURR:hl

Recent Unpublished Customs Service Decisions

The following listing of recent administrative decisions issued by the Office of Regulations and Rulings, U.S. Customs Service, and not otherwise published, is published for the information of Customs officers and the importing community. Although the decisions are not of sufficient general interest to warrant publication as Treasury decisions, the listing describes the issues involved and is intended to aid Customs officers and concerned members of the public in identifying matters of interest which recently have been considered by the Office of Regulations and Rulings.

A copy of any decision included in this listing, identified by its date and file number, may be obtained in a form appropriate for public distribution upon written request to the Office of Regulations and Rulings, Attention: Legal Reference Area, room 2404, U.S. Customs Service, 1301 Constitution Avenue NW., Washington, D.C. 20229. These copies will be made available at a cost to the requester of 10 cents per page. However, the Customs Service will waive this charge if the total number of pages copied is 10 or less.

Decisions listed in earlier issues of the CUSTOMS BULLETIN, through December 21, 1979, are available in microfiche format at a cost of $17.70 (15 cents per sheet of fiche). It is anticipated that additions to the microfiche will be made quarterly and subscriptions are available. Requests for the microfiche now available and for subscriptions should be directed to the Legal Reference Area. Subscribers will automatically receive updates as they are issued and will be billed accordingly.

Dated: July 1, 1980.

JOHN T. ROTH,
Acting Director,
Regulations and Research Division.

Date of Decision	File No.	Issue
4-21-80	104490	Carrier control: Whether a foreign-built, foreign-registered vessel is prohibited from engaging in fish processing in U.S. territorial waters
5-22-80	104506	Aircraft: Customs treatment of scheduled airlines aircraft arriving for refueling only
6-17-80	104515	Vessels: Whether a foreign vessel with an expired register is subject to the payment of special tonnage tax and light money
5-22-80	104525	Carrier control: Whether the Alaskan ports of Whittier and Valdez are in southeastern Alaska for the purposes of the Alaska Native Claims Settlement Act of 1971
5-27-80	104561	Vessels: Assessment of navigation fees on Great Lakes vessel traffic
6-12-80	104592	Vessel repair: Whether the costs of foreign repairs to a radar unit while under warranty are dutiable under the vessel repair statute
5-28-80	104598	Vessel repair: Whether the costs of purchasing and installing a tailshaft for a vessel are dutiable under the vessel repair statute if the tailshaft is made in the United States, purchased in the United States, but installed abroad
5-29-80	104619	Instruments of international traffic: Whether polystyrene protection trays used in the shipment of television chassis assemblies are to be considered instruments of international traffic
6- 4-80	104622	Carrier control: Use of U.S.-flag vessels to land in the United States fish transferred from a foreign-flag processing vessel in the fishery conservation zone
5-22-80	104623	Carrier control: Whether a foreign-built vessel may be used to transport merchandise from Palmyra Island to Honolulu
6-16-80	104707	Aircraft: Whether clearance requirements for aircraft departing the United States may be waived
6- 4-80	712545	Country-of-origin marking: Whether the modification of sewing machines in a country other than that of manufacture results in substantial transformation
6-16-80	061955	American selling price: Ascertainment of the American selling price where two price lists exist for prototype merchandise domestically produced
5-19-80	061990	Classification: Plastic louvers designed for rear windows on vans (774.60)
6- 4-80	064143	Classification: Molded plastic shoe bottom (774.50)
5-19-80	064242	Classification: Coil spring used in the manufacture of electrical connector (652.88, 685.90)
2-25-80	064277	Classification: Quick-connect couplings (680.14, 680.17)
5-19-80	064281	Classification: Machine designed to impart finished qualities of hand and size to fabric (670.43)
6-16-80	064396	Classification: Dust mop (389.62)

Date of Decision	File No.	Issue
6- 4-80	064494	Classification: Wire buckles and strapping seals (649.37, 657.25)
6-16-80	064555	Classification: Combination toy-teethers (737.95)
6- 4-80	064578	Classification: Battery charger (682.60)
4-11-80	064602	Classification: Gaiters (382.81)
6- 4-80	064671	Classification: Plastic hand (737.95)
6-18-80	064764	Classification: Marking pen (760.05)
5-16-80	064813	Classification: Polyester barbed wire (642.02, 657.25, 774.55)
6-16-80	064971	Classification: Clothes drying rack (654.01, 772.15)
6-18-80	064999	Classification: Lead shot (730.93)

International Trade Commission Notices

Investigations by the U.S. International Trade Commission

DEPARTMENT OF THE TREASURY

The appended notices relating to investigations by the U.S. International Trade Commission are published for the information of Customs officers and others concerned.

R. E. CHASEN,
Commissioner of Customs.

In the Matter of CERTAIN SLIDE FASTENER STRINGERS AND MACHINES AND COMPONENTS THEREOF FOR PRODUCING SUCH SLIDE FASTENER STRINGERS	Investigation No. 337–TA–85

Notice to All Parties

Notice is hereby given that a prehearing conference will be held in this case at 10 a.m. on July 3, 1980, in the Dodge Center, room 201, 1010 Wisconsin Avenue NW., Washington, D.C. The purpose of this prehearing conference is to review the trial memoranda submitted by the parties, to stipulate into the record as many exhibits as possible, and to discuss any questions raised by the parties relating to the hearing.

Notice is also given that the hearing in this proceeding will commence at 10 a.m. on July 7, 1980, in the Dodge Center, room 201, 1010 Wisconsin Avenue NW., Washington, D.C.

The Secretary shall publish this notice in the Federal Register.

Issued: June 23, 1980.

JANET D. SAXON,
Administrative Law Judge.

In the Matter of CERTAIN SLIDE FASTENER STRINGERS AND MACHINES AND COMPONENTS THEREOF FOR PRODUCING SUCH SLIDE FASTENER STRINGERS	Investigation No. 337–TA–85

Notice Concerning Procedure for Submission of Information on Public Interest Factors

Notice is hereby given that oral presentations concerning remedy, bonding and the public interest considerations, which factors the Commission is to consider in the event it determines relief should be granted, will be heard beginning at 9 a.m. on July 21 in room 201, 1010 Wisconsin Avenue NW., Washington, D.C. 20007. Written submissions on these questions may be submitted at any time until that date.

If oral presentations are made, participants will have the option of presenting the statement of a witness under oath, subject to cross-examination, or making an oral statement of position, not under oath, and not subject to cross-examination.

In the oral presentations all parties, interested persons, and Government agencies will be limited in their presentations to no more than 15 minutes, not including cross-examination, if there is cross-examination. Each participant will be permitted an additional 5 minutes for closing arguments after all oral presentations have been concluded. Requests for permission to make oral presentations of positions, should be filed, in writing, with the Secretary of the Commission at his office in Washington no later than close of business, July 14, 1980.

The Secretary shall publish this notice in the Federal Register.

Issued: June 25, 1980.

JANET D. SAXON,
Administrative Law Judge.

In the Matter of CERTAIN FOOD SLICERS AND COMPONENTS THEREOF	Investigation No. 337–TA–76

Action and Order Remanding Order No. 10 and Clarifying the Procedure in Certifying to the Commission Certain Motions Denied by the Presiding Officer

ACTION

On May 23, 1980, the presiding officer in the above-captioned case issued order No. 10, certifying a request for a Commission ruling on interlocutory appeals as they relate to a motion on the taking of depositions. The Commission is remanding that order to the presiding officer. The presiding officer correctly construed the procedure under 19 CFR, section 210.60(b) that the presiding officer need only certify to the Commission interlocutory appeals which meet the conditions set forth under section 210.60(b). In addition, with respect to the presiding officer's request, the order is remanded to clarify that motions to amend pursuant to 19 CFR, section 210.22 whether granted or denied by the presiding officer, must be certified to the Commission with a recommendation by the presiding officer.

ORDER

The Commission determines that order No. 10 be remanded to the presiding officer in order that she may rule upon motion No. 76–8, on taking of depositions in the above-captioned case. The Commission further determines that order No. 10 be remanded to clarify that motions to amend pursuant to 19 CFR, section 210.22, whether granted or denied by the presiding officer, must be certified to the Commission with a recommendation by the presiding officer.

By order of the Commission.

Issued: June 27, 1980.

KENNETH R. MASON,
Secretary.

In the Matter of CERTAIN INCLINED-FIELD ACCELERATION TUBES AND COMPONENTS THEREOF	Investigation No. 337–TA–67

Notice of Termination

Upon consideration of the presiding officer's recommendation and the record in this proceeding, the Commission is ordering the termination of investigation No. 337–TA–67, Certain Inclined-Field Acceleration Tubes and Components Thereof, as to respondent the University of Rochester, by granting motion docket No. 67–16 by the University of Rochester.

The order is effective as of June 24, 1980.

Any party wishing to petition for reconsideration of the Commission's action must do so within 14 days of service of the Commission order. Such petitions must be in accord with Commission rule 210.56 (19 CFR 210.56).

Copies of the Commission's action and order and any other public documents in this investigation are available to the public during official working hours (8:45 a.m. to 5:15 p.m.) in the office of the Secretary, U.S. International Trade Commission, 701 E Street NW., Washington, D.C. 20436; telephone 202-523-0161.

Notice of the institution of this investigation was published in the Federal Register of June 27, 1979 (44 F.R. 32567).

By order of the Commission.

Issued: June 24, 1980.

KENNETH R. MASON.
Secretary.

In the Matter of CERTAIN AIRTIGHT CAST-IRON STOVES	Investigation No. 337-TA-69

Notice of Denial of Petition

On June 24, 1980, the U.S. International Trade Commission denied the petition by complainants and the Commission investigative attorney in the above-captioned case to make a determination with regard to motion No. 69-29. The Commission also waived rule 210.60(b) for motion No. 69-29 insofar as it requires that interlocutory appeals be filed within 5 days after notice of the presiding officer's determination.

Copies of the Commission's action, order, and opinion are available in the office of the Secretary, 701 E Street NW., Washington, D.C. 20436; phone 202-523-0161.

By order of the Commission.

Issued: June 25, 1980.

KENNETH R. MASON,
Secretary.

In the Matter of CERTAIN SLIDE FASTENER STRINGS	Investigation No. 337-TA-85

Notice of Designation of Commission Investigative Attorney

Mr. David J. Dir is designated Commission investigative attorney for investigation No. 337-TA-85, Certain Slide Fastener Strings. The service of all papers on the Commission investigative attorney should be upon Mr. Dir, effective June 25, 1980.

The Secretary is requested to publish this notice in the Federal Register.

EDWARD M. LEBOW,
Acting Chief,
Unfair Import Investigations Division.

Index

U.S. Customs Service

	T.D. No.
Treasury decisions:	
Clarification of port limits, Denver, Colo., section 101.3, Customs Regulations, amended	80-180
Foreign currencies:	
Daily certified rates; June 9-13, 1980	80-177
Daily certified rates; June 16-20, 1980	80-181
Rates which varied from quarterly rate; June 9-13, 1980	80-178
Rates which varied from quarterly rate; June 16-20, 1980	80-182
Metric conversion of quantities of merchandise, part 148, Customs Regulations, amended	80-179

Customs Court

	C.A.D. No.
Decisions of the United States Court of Customs and Patent Appeals:	
The United States v. *RMS Electronics Inc*	1249

U.S. GOVERNMENT PRINTING OFFICE : 1980 O - 322-276

AUG 1 1980
9322-27
290
Item 950-D
& contin
T 1.11/3:14/30

Customs Bulletin

Regulations, Rulings, Decisions, and Notices concerning Customs and related matters

and Decisions

of the United States Court of Customs and Patent Appeals and the United States Customs Court

9247

Vol. 14 JULY 23, 1980 No. 30

This issue contains

T.D. 80–183 through 80–185
General Notice
C.S.D. 80–76 through 80–100
C.D. 4860
Reap. abstracts R80/204 through R80/217
International Trade Commission Notice

THE DEPARTMENT OF THE TREASURY
U.S. Customs Service

NOTICE

The abstracts, rulings, and notices which are issued weekly by the U.S. Customs Service are subject to correction for typographical or other printing errors. Users may notify the U.S. Customs Service, Logistics Management Division, Washington, D.C. 20229, of any such errors in order that corrections may be made before the bound volumes are published.

For sale by the Superintendent of Documents, U.S. Government Printing Office, Washington, D.C. 20402. Price: $2.25 (single copy domestic); $2.85 (single copy foreign). Subscription price: $85.00 a year domestic; $106.25 a year foreign.

U.S. Customs Service

Treasury Decisions

(T.D. 80–183)

Manmade Fiber Textile Products—Restriction on Entry

Restriction on entry of manmade fiber textile products manufactured or produced in Romania

There is published below a directive of June 9, 1980, received by the Commissioner of Customs from the chairman, Committee for the Implementation of Textile Agreements, concerning restriction on entry of manmade fiber textile products in category 635 manufactured or produced in Romania.

This directive amends, but does not cancel, that committee's directive of May 13, 1980 (T.D. 80–164).

This directive was published in the Federal Register on June 11, 1980 (45 F.R. 39528), by the committee.

(QUO–2–1)

Dated: July 2, 1980.

WILLIAM D. SLYNE
(For Chester R. Krayton,
Director, Duty Assessment Division).

U.S. DEPARTMENT OF COMMERCE,
INTERNATIONAL TRADE ADMINISTRATION,
Washington, D.C., June 8, 1980.

Committee for the Implementation of Textile Agreements

COMMISSIONER OF CUSTOMS,
Department of the Treasury,
Washington, D.C.

DEAR MR. COMMISSIONER: This directive amends, but does not cancel, the directive of May 13, 1980 from the chairman of the Com-

mittee for the Implementation of Textile Agreements which directed you to prohibit, for the 12-month period beginning on January 1, 1980, and extending through December 31, 1980, entry into the United States for consumption and withdrawal from warehouse for consumption of manmade fiber textile products in category 635, produced or manufactured in Romania.

Under the terms of the Arrangement Regarding International Trade in Textiles done at Geneva on December 20, 1973, as extended on December 15, 1977; pursuant to the Bilateral Wool and Man-Made Fiber Textile Agreement of June 17, 1977, as amended, between the Governments of the United States and the Socialist Republic of Romania; and in accordance with the provisions of Executive Order 11651 of March 3, 1972, as amended by Executive Order 11951 of January 6, 1977, you are directed to prohibit, effective on June 12, 1980, and for the 12-month period beginning on January 1, 1980, and extending through December 31, 1980, entry into the United States for consumption of manmade fiber textile products in category 635 in excess of 33,898 dozen.[1]

The action taken with respect to the Government of the Socialist Republic of Romania and with respect to imports of manmade fiber textile products from Romania has been determined by the Committee for the Implementation of Textile Agreements to involve foreign affairs functions of the United States. Therefore, the directions to the Commissioner of Customs, which are necessary for the implementation of such actions, fall within the foreign affairs exception to the rule-making provisions of 5 U S.C. 553. This letter will be published in the Federal Register.

Sincerely,

PAUL T. O'DAY,
Chairman, Committee for the Implementation of Textile Agreements.

(T.D. 80–184)

Recent Statutory Changes

Text of significant statutory changes made by Public Laws 96–112 and 96–275

Two recently enacted public laws amended statutes which affect segments of the international trading community, including owners of vessels documented by the United States. Public Law 96–275, approved by the President on June 17, 1980, relates to the confidentiality of

[1] The level of restraint has not been adjusted to reflect any imports after Dec. 31, 1979.

shippers' export declarations, to export data submission and disclosure requirements and information to be included in outward cargo manifests. Section 4 of Public Law 96–112, approved on November 16, 1979, the Maritime Appropriations Authorization Act for Fiscal Year 1980, contains an amendment to section 27 of the Merchant Marine Act, 1920 (46 U.S.C. 883), in the form of a new proviso relating to the use of vessels documented under the laws of the United States and owned by persons who are citizens of the United States.

In order to provide wider dissemination of these statutory changes, Public Law 96–275 is reproduced below in its entirety, followed by section 4 of Public Law 96–112. Amendments to the Customs Regulations to reflect the changes made by Public Law 96–275 are currently being drafted. No regulatory changes are required by reason of the new proviso added to 46 U.S.C., 883 by Public Law 96–112.

Dated: July 2, 1980.

JOHN T. ROTH,
Acting Director,
Regulations and Research Division.

PUBLIC LAW 96–275—JUNE 17, 1980

June 17, 1980
[H.R. 6842]

AN ACT To protect the confidentiality of Shippers' Export Declarations, and to standardize export data submission and disclosure requirements

Shippers' Export Declarations, confidentiality.

Be it enacted by the Senate and House of Representatives of the United States of America in Congress assembled, That section 301 of title 13, United States Code, is amended by adding at the end thereof the following new subsection:

"(g) Shippers' Export Declarations (or any successor document), wherever located, shall be exempt from public disclosure unless the Secretary determines that such exemption would be contrary to the national interest.".

Export data submission and disclosure requirement standardization.

SEC. 2. Section 4199 of the Revised Statutes (46 U.S.C. 93) is amended to read as follows:

SEC. 4199. (a) Copies of bills of lading or equivalent commercial documents relating to all cargo encompassed by the manifest required under this chapter shall be attached to such manifest and delivered to the appropriate officer of the United States Customs Service at the time such manifest is delivered.

"(b) The following information shall be included on such manifest or on attached copies of bills of lading or equivalent commercial documents:

"(1) Name and address of shipper.

"(2) Description of the cargo.

"(3) Number of packages and gross weight.

"(4) Name of vessel or carrier.

"(5) Port of exit.

"(6) Port of destination.

"(c) Except as provided in subsection (d), the following information contained on such manifest, or on attached copies of bills of lading or equivalent commercial documents, shall be available for public disclosure:

"(1) Name and address of shipper, unless the shipper has made a biennial certification claiming confidential treatment pursuant to procedures adopted by the Secretary of the Treasury.

"(2) General character of the cargo.

"(3) Number of packages and gross weight.

"(4) Name of vessel of carrier.

"(5) Port of exit.

"(6) Port of destination.

"(7) Country of destination.

Disclosure, exemptions.

"(d) The information listed in subsection (c) shall not be available for public disclosure if—

"(1) the Secretary of the Treasury makes an affirmative finding on a shipment-by-shipment basis that disclosure is likely to pose a threat of personal injury or property damage; or

"(2) the information is exempt under the provisions of section 552(b)(1) of title 5 of the United States Code.

Access procedures, establishment.

"(e) The Secretary of the Treasury, in order to allow for the timely dissemination and publication of the information listed in subsection (c) above, is authorized to establish procedures to provide access to manifests, or attached bills of lading or equivalent commercial documents which shall include provisions for adequate protection against the public disclosure of information not available for public disclosure from such manifests or attached bills of lading, or equivalent commercial documents.".

SEC. 3. Nothing in this Act shall be construed as authorizing the withholding of information from Congress. 13 USC 301 note.

SEC. 4. (a) Except as provided in subsection (b), this Act, and the amendments made by this Act, shall become effective on the later of July 1, 1980, or the date of enactment of this Act. Effective dates. 13 USC 301 note.

(b) The amendment made by section 2 shall become effective on the date which is forty-five days after the date of enactment of this Act.

Approved June 17, 1980.

PUBLIC LAW 96-112—NOVEMBER 16, 1979

AN ACT To authorize appropriations for the fiscal year 1980 for certain maritime programs of the Department of Commerce, and for other purposes

Nov. 16, 1979
[S. 640]

Be it enacted by the Senate and House of Representatives of the United States of America in Congress assembled,

SEC. 4. Section 27 of the Merchant Marine Act, 1920 (46 U.S.C. 883) is amended by striking out the period at the end thereof and inserting the following new proviso: ": *Provided further*, That until April 1, 1984, and notwithstanding any other provisions of this section, any vessel documented under the laws of the United States and owned by persons who are citizens of the United States may, when operated upon a voyage in foreign trade, transport merchandise in cargo vans, lift vans, and shipping-tanks between points embraced within the coastwise laws for transfer to or when transferred from another vessel or vessels, so documented and owned, of the same operator when the merchandise movement has either a foreign origin or a foreign destination; but this proviso (1) shall apply only to vessels which that same operator owned, chartered or contracted for the construction of prior to the date of the enactment of this proviso, and (2) shall not apply to movements between points in the contiguous United States and points in Hawaii, Alaska, the Commonwealth of Puerto Rico and United States territories and possessions.". Merchant Marine Act, amendment.

Approved November 16, 1979

(T.D. 80-185)

Instruments of International Traffic

Certain polyvinyl chloride magazines used for the transportation of integrated circuits designated as instruments of international traffic

It has been established to the satisfaction of the U.S. Customs Service that translucent rigid tubular polyvinyl chloride magazines measuring 20 inches in length, tapering from 0.334 to 0.6 inch in width, and 0.496 inch in height, with a longitudinal groove in the base 0.214 inch in width and 0.266 inch in depth, and with holes punched 0.18 and 1.18 inches from each end of the magazine for plugs, designed to carry integrated circuits and marked "Antistatic-K/S Motorola IITT," are substantial containers or holders which are designed for and capable of repeated use in transportation and will be used in substantial numbers in international traffic.

Under the authority of section 10.41a(a)(1), Customs Regulations, I hereby designate the above-described polyvinyl chloride magazines as instruments of international traffic within the meaning of section 322(a), Tariff Act of 1930, as amended (19 U.S.C. 1322 (a)). These containers may be released under the procedures provided for in section 10.41a, Customs Regulations. (104556)

(BOR-7-07)

Dated: June 27, 1980.

ALFRED G. SCHOLLE,
Director, Carriers,
Drawback and Bonds Division.

U.S. Customs Service

General Notice

(19 CFR, Parts 19, 24)

Customs Warehouses and Container Stations

Proposed amendments to the Customs Regulations pertaining to fees for processing applications for bonded warehouses and container stations

AGENCY: U.S. Customs Service, Department of the Treasury.

ACTION: Proposed rule.

SUMMARY: This document proposes to amend the Customs Regulations (1) to increase the fee that must accompany an application to establish a bonded warehouse, and (2) to require a fee to accompany an application to alter an existing bonded warehouse or to establish a container station. These changes are proposed by virtue of the requirement that Federal agencies charge appropriate fees for providing special benefits to identifiable recipients above and beyond those which accrue to the general public. The proposed amendments are not considered to be significant.

DATES: Comments must be received on or before 60 days from publication in the Federal Register.

ADDRESS: Comments (preferably in triplicate) may be addressed to the Commissioner of Customs, attention: Regulations and Research Division, U.S. Customs Service, 1301 Constitution Avenue NW., room 2335, Washington, D.C. 20229.

FOR FURTHER INFORMATION CONTACT: John Holl, Office of Inspection, U.S. Customs Service, 1301 Constitution Avenue NW., Washington, D.C. 20229; 202-566-5354.

SUPPLEMENTARY INFORMATION:

BACKGROUND

The Independent Offices Appropriation Act, 1952 (31 U.S.C. 483a), the so-called User Charges Statute, requires Federal agencies to be as self-sustaining as possible. This statute authorizes the head of each

322-277 O - 80 - 2

Federal agency to establish fees for services provided to identifiable members of the public. The fees must be fair and equitable, taking into consideration the direct and indirect costs to the Government, the value to the recipient, the public policy or interest served, and other pertinent facts.

Office of Management and Budget (formerly Bureau of the Budget) Circular No. A-25, September 23, 1959, contains policy guidelines implementing 31 U.S.C. 483a. The circular states that if a service (or privilege) provides special benefits to an identifiable receipient above and beyond those which accrue to the public at large, a charge should be imposed to recover the full cost to the Government of furnishing that service. The circular also requires that the charges shall be determined or estimated from the best available agency records, and that the cost computation shall cover the direct and indirect costs to the Government of carrying out the activity, including, among other things, a proportional share of the agency's management and supervisory costs.

Although imported merchandise ordinarily is subject to entry and the payment of duty at the time and place the merchandise arrives in the United States, entry and payment of duty may be postponed in certain circumstances. For example, merchandise may be removed from the place of arrival to a Customs bonded warehouse or to a container station before entry and the payment of duty.

Bonded warehouses are secured areas within the United States in which imported merchandise may be placed for up to 5 years from the date of importation without payment of duty. Merchandise in a bonded warehouse may be stored, or manipulated, or may undergo manufacturing operations. The merchandise then may be exported, withdrawn for use as supplies on a vessel or aircraft in international traffic, destroyed under Customs supervision, or withdrawn from warehouse for consumption. No duty is collected unless and until the merchandise is withdrawn from the warehouse for consumption.

Container stations are secured areas within the United States into which containers of merchandise may be moved for the purpose of opening the container and delivering the contents before an entry is filed or duty is paid.

The procedure relating to Customs warehouses, container stations, and the control of merchandise in these areas is found in part 19, Customs Regulations (19 CFR, part 19).

BONDED WAREHOUSES

Section 19.2, Customs Regulations (19 CFR 19.2), provides, in part, that an owner or lessee desiring to establish a bonded warehouse shall file a written application with the district director of Customs

which, among other things, describes the premises, gives the location, and states the class of warehouse. As prescribed in that section and section 24.12, Customs Regulations (19 CFR 24.12), a fee of $80 must accompany the application.

Before an application may be approved, Customs must—

(1) Determine that the application is in proper form;

(2) Survey the premises to determine that all physical requirements are met;

(3) Perform a background investigation of the applicant and the applicant's officers and employees;

(4) Prepare a report of that investigation; and

(5) Review the application, survey, and background investigation report and prepare a response to the applicant.

Section 19.3, Customs Regulations (19 CFR 19.3), relates to alterations to existing bonded warehouses. Before an application to alter an existing bonded warehouse is approved, Customs must perform the same functions as are required in connection with an application to establish a bonded warehouse, except that a background investigation of the applicant and the applicant's officers and employees is not required. However, no fee presently is required to accompany an application to alter an existing bonded warehouse.

A review of the costs involved in performing these functions reveals that the $80 fee presently required with an application to establish a bonded warehouse is inadequate. As recently as November 1977, processing costs to Customs for initial applications were approximately $425, and the cost to Customs of processing an application to alter an existing bonded warehouse was approximately $195.

CONTAINER STATIONS

Section 19.40, Customs Regulations (19 CFR 19.40), provides that a container station, independent of the importing carrier, may be established at any port or other area under the jurisdiction of a district director of Customs. To establish a container station, an application must be filed with, and approved by, the District Director. However, even though the administrative costs to Customs to process the application are the same as for an application to establish a bonded warehouse, no fee now is required to accompany the application.

PROPOSED ACTION

It is proposed to amend sections 19.2, 19.3, 19.40, and 24.12, Customs Regulations (19 CFR 19.2, 19.3, 19.40, 24.12)—

(1) To delete the reference in section 19.2(a) to the $80 fee required to accompany an application to establish a Customs bonded warehouse;

(2) To provide in section 19.3(a) for a fee to accompany an application to alter a Customs bonded warehouse;

(3) To provide in section 19.40 for a fee to accompany an application to establish a container station; and

(4) To provide in section 24.12(a) for publication of a general notice in the Federal Register and the CUSTOMS BULLETIN on or about August 31 of each year which will establish the fees for the next fiscal year.

Although not specifically provided for in the proposed amendment to section 24.12, if the proposal is adopted before August 31, 1980, a general notice will be published to establish a fee schedule for the remainder of the 1980 fiscal year.

In accordance with 31 U.S.C. 483a, the fee schedule will be based on the actual current costs to Customs of processing an application to establish or to alter a Customs bonded warehouse, or to establish a container station. These costs are related closely to Customs employees' salaries and, therefore, are subject to change annually.

AUTHORITY

The authority for the proposed amendments is R.S. 251, as amended, section 624, 46 Stat. 759 (19 U.S.C. 66, 1624); section 501, 65 Stat. 290 (31 U.S.C. 483a).

INAPPLICABILITY OF EXECUTIVE ORDER 12044

This document is not subject to the Treasury Department directive of November 8, 1978 (43 F.R. 52120) implementing Executive Order 12044, Improving Government Regulations, because it was in process before May 22, 1978, the effective date of the directive.

COMMENTS

Before adopting this proposal, consideration will be given to any written comments, preferably in triplicate, that are submitted timely to the Commissioner of Customs.

Comments submitted will be available for public inspection in accordance with section 103.8(b), Customs Regulations (19 CFR 103.8(b)), during regular business hours at the Regulations and Research Division, Headquarters, U.S. Customs Service, 1301 Constitution Avenue NW., room 2335, Washington, D.C. 20229.

DRAFTING INFORMATION

The principal authors of this document were Shannon McCarthy and John Elkins, Regulations and Research Division, Office of Regulations and Rulings, U.S. Customs Service. However, personnel from other Customs offices participated in its development.

PROPOSED AMENDMENTS

It is proposed to amend parts 19 and 24, Customs Regulations, (19 CFR, parts 19, 24), in the following manner:

PART 19—CUSTOMS WAREHOUSES, CONTAINER STATIONS AND CONTROL OF MERCHANDISE THEREIN

1. It is proposed to amend the first sentence of section 19.2(a) by deleting "of $80".

2. It is proposed to amend section 19.3(a) by adding a new last sentence to read as follows:

> * * * An application to alter a bonded warehouse shall be accompanied by the fee required by section 24.12(a)(1) of this chapter.

3. It is proposed to amend the paragraph before the bond in section 19.40 to read as follows:

19.40 Establishment of container stations.

A container station, independent of the importing carrier, may be established at any port or portion of a port, or any area under the jurisdiction of a District Director, upon the filing of an application, accompanied by the fee required by section 24.12(a)(1) of this chapter, and its approval by the District Director. The applicant also must post a bond in the following format in the sum of $25,000 or such larger amount as the District Director shall determine:

* * * * * * *

PART 24—CUSTOMS FINANCIAL AND ACCOUNTING PROCEDURE

It is proposed to amend section 24.12(a)(1), to read as follows:

24.12 Customs fees; charges for storage.

(a) * * *

(1) A Customs fee shall accompany an application to establish or to alter a Customs bonded warehouse filed under the provisions of section 19.2 or section 19.3 of this chapter, or an application to establish a container station filed under the provisions of section 19.40 of this chapter. A general notice shall be published annually in the Federal Register and the CUSTOMS BULLETIN on or about August 31 to establish the fees to be effective during the next fiscal year.

In accordance with 31 U.S.C. 483a, the fee shall be sufficient to cover the cost to Customs of processing the application.

No fee shall be collected in connection with any application to discontinue a Customs bonded warehouse, or to reactivate a Customs bonded warehouse after its temporary suspension unless

an alteration has taken place during the period of suspension, or for a cargo security survey of a container station.

* * * * * * *

WILLIAM T. ARCHEY,
Acting Commissioner of Customs.

Approved: June 19, 1980.
RICHARD J. DAVIS,
Assistant Secretary of the Treasury.

U.S. Customs Service

Customs Service Decisions

DEPARTMENT OF THE TREASURY,
OFFICE OF THE COMMISSIONER OF CUSTOMS,
Washington, D.C.

The following are decisions made by the U.S. Customs Service where the issues involved are of sufficient interest or importance to warrant publication in the CUSTOMS BULLETIN.

Dated: July 8, 1980.

HARVEY B. FOX
(For Director, Office of
Regulations and Rulings).

(C.S.D. 80-78)

Conditionally Free Merchandise: Whether Emergency War Material must be Under Contract at the Time of Entry or Withdrawal

Date: August 6, 1979
File: ENT-1-01 R:E:E
710831 M

This ruling concerns the importation of emergency war material.

Issue.—In order to obtain the benefit of the duty-free entry provision set forth in item 832.00 of the Tariff Schedules of the United States (TSUS), must the article involved be under contract to the appropriate military agency at the time the merchandise is entered for consumption or withdrawn from warehouse for consumption?

Facts.—An importer is a distributor of emergency war material, such as tubing, pipe, rod, bars, and other such material, for various military agencies, especially the Navy. The importer's system of accounting for such merchandise is approved by the Department of Defense and all sales to the military are documented by one contract number and D.O. rating.

Very often the importer must purchase the materials in quantities in excess of the amount that is needed for any one contract. The importer requests permission to import and enter for consumption

the entire quantity (including that quantity not under contract at the time the merchandise is entered for consumption) free of duty under item 832.00 TSUS. For that quantity in excess of the amount contracted for, he proposes to post bond for the producing of its certification by a military agency within 6 months from the date the merchandise is entered for consumption. Within that 6-month period, the importer expects to be able to sell under contract the excess amount to a military agency and therefore be able to provide Customs with the required certificate. If during this 6-month period the importer is unable to sell any of the excess quantity of merchandise entered for consumption, he would tender duty at the end of that period for that amount he was unable to sell during the 6-month period to a military agency.

Law and Analysis.—Item 832.00 of the Tariff Schedules of the United States (TSUS) provides that material certified to the Commissioner of Customs by the authorized procuring agencies to be emergency war material may be admitted free of duty. Section 10.102(b) of the Customs Regulations provides that the required certification from the military agency should be submitted when the merchandise is entered for consumption or withdrawn from warehouse for consumption.

Section 141.66 of the Customs Regulations permits the posting of a bond for the production of a document which is not available when the merchandise is entered for consumption. Section 113.42 of the Customs Regulations provides that the normal time period for the production of such document is 6 months from the date of the transaction in connection with which such bond was given (which, in this case, would be the time when the merchandise was entered for consumption).

We believe that the appropriate law and regulations cited above look to the status of the merchandise at the time it is entered or withdrawn for consumption. Section 141.66 and 113.42 of the Customs Regulations merely enable the importer to post bond and produce the required documentation (in this instance, the certification from the military department) at a time subsequent to when the merchandise was entered for consumption. However, the merchandise must be entitled to duty-free entry under item 832.00, TSUS, when it was entered for consumption. The quantity of merchandise which was not covered by a military contract when such merchandise was entered for consumption would not qualify at the time of entry for consumption for duty-free entry under item 832.00, TSUS, because this merchandise was not entered pursuant to a military procurement.

We offer this procedure as a possible solution to the importer's dilemma. Instead of entering for consumption the quantity of mer-

chandise not covered by a military contract, he could enter such merchandise in a Customs bonded warehouse. Such merchandise could remain in the warehouse until the importer is able to sell this merchandise to a military agency. (Of course, there is a limitation of 5 years from the date of importation as to the length of time merchandise may remain in a Customs bonded warehouse, but under the facts set forth in this case the importer's merchandise would be sold and withdrawn from warehouse before such time period had expired.) After the importer has sold his merchandise to the military, he could then withdraw such merchandise from the warehouse for consumption free of duty by filing the required certificate with his warehouse withdrawal for consumption.

Holding.—In order to obtain the benefit of duty-free entry under item 832.00 TSUS, the article involved must be under contract to the appropriate military agency at the time the merchandise is entered for consumption or withdrawn from warehouse for consumption.

(C.S.D. 80-77)

Prohibited and Restricted Importations: Trademark Infringement; Watches; Substantial Likelihood of Confusion

Date: August 8, 1979
File: TMK-3-R:E:E
710451 SO

This ruling concerns the applicability of the prohibition set forth in section 526 of the Tariff Act of 1930, as amended (19 U.S.C. 1526), against the importation into the United States of merchandise of foreign manufacture bearing an American trademark.

Issue.—Would the importation of watches bearing the mark, "Bolivia," on the face infringe upon the rights of the owner of the registered trademark, "Bulova," for watches, watch movements and parts thereof, and watchcases.

Facts.—Watches bearing the mark, "Bolivia," manufactured in Hong Kong by several manufacturers, have been imported into the United States. The attorney for the trademark owner and Customs officers at New York are both seeking a ruling as to whether these shipments infringe upon the rights of the American trademark owner, Bulova Watch Co., Inc., which has recorded their registered trademark, "Bulova," with Customs for import protection. The trademark registration is for watches, watch movements and parts thereof, and watchcases.

322-277 O - 80 - 3

The Bulova Watch Co., Inc., and their attorney, have submitted several letters, with attachments, documenting their efforts to protect their trademark against infringing watch importations. Bulova has already commenced several suits to enjoin the sale of watches bearing the "Bolivia" mark and have received relief in the form of consent decrees and restraining orders from several Federal courts. In addition, we understand that the prosecuting attorney, Fifth Judicial District, State of Arkansas, is prosecuting several peddlers of "Bolivia" watches for violation of an Arkansas criminal statute entitled "Criminal Simulation." 2,000 watches bearing the "Bolivia" mark were confiscated. Bulova submitted three samples of the imported watches to Customs for comparison purposes.

Law and analysis.—Section 526 of the Tariff Act of 1930, as amended, (19 U.S.C. 1526) prohibits the importation into the United States of any merchandise of foreign manufacture bearing a trademark owned by a corporation created or organized within the United States, provided a copy of such trademark registration is filed with the Secretary of the Treasury and recorded in the manner provided by regulations (19 CFR 133.1–133.7). Any such merchandise bearing a counterfeit mark, within the meaning of section 45 of the act of July 5, 1946 (commonly referred to as the Lanaham Act, 60 Stat. 427; 15 U.S.C. 1127), imported in violation of the provisions of section 42 of the act of July 5, 1946 (15 U.S.C. 1124), shall be seized, and, in the absence of written consent of the trademark owner, forfeited for violations of the Customs laws.

The term "counterfeit" is defined in the law (15 U.S.C. 1127) as a spurious mark which is identical with, or substantially indistinguishable from, a registered mark. Since the mark "Bolivia," is not identical to "Bulova," it is not considered to be a counterfeit mark within the definition cited above, and future shipments would not be subject to the procedures set forth in 19 U.S.C. 1526(e) and section 133.23a of the Customs Regulations (19 CFR 133.23a) for notice to the trademark owner, seizure and forfeiture to the Government, and disposition of forfeited merchandise in accordance with 19 CFR 133.52(c) in the absence of written consent of the trademark owner to an alternative disposition.

Infringement of federally registered marks is governed by the test of whether defendant's use is likely to cause confusion, or to cause mistake, or to deceive. In considering the question of whether or not the marks are confusingly similar, we note that both marks have been applied to watches, and that the sound and appearance of "Bulova" and "Bolivia" are strikingly similar. Under the normal test applicable to unsophisticated buyers of a product at retail, we

are of the opinion that there would be a substantial likelihood of confusion.

The trademark "Bulova," has been in continuous use by the Bulova Watch Co., Inc., and its predecessor, J. Bulova Co., since 1907. It appears to us that the manufacturers and importers of "Bolivia" watches are latecomers in the industry. In a situation such as this, any doubts regarding likelihood of confusion should be resolved in favor of the prior user of the mark. The theory behind this is that the newcomer's field of selection of a mark is not so limited as to require the adoption of a mark likely to cause confusion. Accordingly, entry of the imported watches bearing the mark "Bolivia," would be prohibited entry into the United States as infringing the registered trademark "Bulova."

Holding.—Importations of watches bearing the infringing mark, "Bolivia," should be detained pursuant to section 133.22 of the Customs Regulations (19 CFR 133.22). Articles detained pursuant to 19 CFR 133.22 may be released to the importer during the 30-day period of detention if any of the circumstances allowing exemption from trademark restrictions set forth in 19 CFR 133.21(c) are established. A copy of this ruling is being furnished to all Customs officers for their guidance.

(C.S.D. 80-78)

Carrier Control: Use of Foreign-Built Vessel as Classroom in U.S. Territorial Waters

Date: August 8, 1979
File: VES-3-04-R:CD:C
104152 DR

This ruling concerns the use of a foreign-built vessel on which to conduct courses in marine law enforcement work.

Issue.—Whether a foreign-built vessel may be used while moored in ports in the United States for the conducting of classes in marine law enforcement-related courses.

Facts.—It is intended to use a (named) 43-foot, cutter-rigged sailing vessel built in Taiwan to hold classes in marine theft prevention and demonstrations of marine security devices to local law enforcement agencies and other parties interested in marine police matters. The vessel will be operated in various U.S. ports. All classes held on the vessel will be while the vessel is moored in a port. At no time will any person, other than the teaching staff, be on board the vessel while it is in transit. The vessel will not engaged in the transportation, sale, or distribution of any merchandise from port to port.

Law and analysis.—Pursuant to the provisions of title 46, United States Code, sections 11, 289, and 883, foreign-built vessels are prohibited from engaging in the coastwise trade. The term "coastwise trade" is defined as the transportation of passengers or merchandise between points embraced within the coastwise laws of the United States, and the transportation of passengers entirely within the territorial jurisdiction of the United States. If the vessel remains moored to a pier while the classes or demonstrations are conducted, the coastwise laws will not be involved with respect to those persons attending.

Anyone who is connected with the operation, navigation, ownership, or business of a vessel is not considered to be a passenger. Therefore, the teaching staff would not be considered to be transported in violation of the coastwise laws when the vessel is in transit.

The legitimate equipment of a vessel is not considered to be merchandise and may be carried on board a foreign-built vessel between ports in the United States without being considered as transportation in violation of the coastwise laws.

Holding.—There is no law administered by the Customs Service which would prohibit the use of a foreign-built vessel for the holding of classes and the demonstration of equipment related to these classes while the vessel is moored to shore facilities. Nor is there any law administered by Customs which would prohibit the carriage on a foreign-built vessel between points in the United States of equipment or of persons connected with the operation, navigation, or ownership of the vessel.

(C.S.D. 80–79)

Instruments of International Traffic: Containers, End Covers, and Skids

Date: August 10, 1979
File: BOR-7-R:CD:C
104020 JL

This ruling concerns a request that certain devices be designated as "Instruments of International Traffic" within the meaning of 19 U.S.C. 1322(a).

Issue.—Do the containers, end covers, and skids described below, which are used in the transportation of large steam turbine parts, qualify for designation as instruments of international traffic?

Facts.—There are actually four devices under consideration. They are low-pressure rotor containers, generator rotor containers, generator end covers, and generator stator skids. All of the devices are built with the use of heavy structural steel plate. The low-pressure rotor containers and generator rotor containers completely enclose the

assemblies they are to carry. The skid of course is a platform upon which the generator stator rests. At each end of a generator are two end covers which are bolted onto its body. All of the devices have an estimated useful lite of a minimum of 20 years and a total of 11 pieces are in use in international traffic at this time.

Law and analysis.—To qualify as an instrument of international traffic within the meaning of 19 U.S.C. 1322(a), an article must be used as a container or holder, must also be substantial, suitable for and capable of repeated use, and used in significant numbers in international traffic.

Section 10.41a, Customs Regulations, provides that lift vans, cargo vans, shipping tanks, skids, pallets, and similar devices, along with repair components, are designated as instruments of international traffic within the meaning of section 1322(a). The devices described above are similar to shipping tanks, lift vans, cargo vans, and skids. Further, each article is substantial in construction, suitable for and capable of repeated use, and used in significant numbers in international traffic, considering the type of merchandise transported.

Holding.—The low-pressure rotor containers, generator rotor containers, generator end covers, and generator stator skids described above are held to be instruments of international traffic and therefore may be released in accordance with section 10.41a of the Customs Regulations.

(C.S.D. 80-80)

In-Bond Entries: Steel Ingots Entered Temporarily Free of Duty Under Bond for Processing under Item 864.05, TSUS; Abandonment of Valuable Waste

Date: August 14, 1979
File: CON-9-R:CD:D JB
210405

Issue.—Whether item 864.05, Tariff Schedules of the United States (TSUS), a provision for temporary importation under bond (TIB), may be applied to an importation of steel ingots for processing, in which valuable waste resulting from the manufacture is abandoned to the U.S. manufacturer.

Facts.—The importer proposes to enter steel ingots into the United States from Canada under the above-cited TIB provision. A U.S. manufacturer will process the steel ingots into hot rolled steel bands for exportation to Canada. As a result of the manufacturing process a certain amount of scrap waste will be generated, some recoverable and some not. The importer seeks a ruling that such recoverable waste

may be abandoned to the U.S. manufacturer without violation of the terms of the TIB.

Law and analysis.—Item 864.05, TSUS, provides for temporary free importation under bond of "Articles to be repaired, altered, or processed (including processes which result in articles manufactured or produced in the United States)," when not imported for sale or sale on approval. Merchandise imported under item 864.05, TSUS, in addition to the general TIB requirements outlined in headnote 2(b) of schedule 8, part 5, subpart C, TSUS, is subject to two specific requirements, as follows:

> (b) if any processing of such merchandise results in an article * * * manufactured or produced in the United States—
>
> (i) a complete accounting will be made to the Customs Service for all articles, wastes, and irrecoverable losses resulting from such processing, and
>
> (ii) all articles and valuable wastes resulting from such processing will be exported or destroyed under Customs supervision within the bonded period.

The importer estimates that an up-the-chimmey loss of approximately 1 percent will result from the manufacturing process. This is an irrecoverable loss, the nonexportation of which will not violate the conditions of the TIB. It is, of course, subject to the accounting requirement of (b)(i) detailed above.

There will also result a recoverable waste of approximately 4 percent. The importer states that the cost involved in exporting the scrap would outweigh the value of the scrap to them. It is thus argued that, as applied to them, the scrap be deemed to be of no commercial value. Such a finding would free the importer to abandon the scrap to the U.S. manufacturer without violating the exportation requirement of the TIB.

The test to be applied in regard to waste under item 864.05, TSUS, is commercial value. (American Gas Accumulator Co. v. U.S. T.D. 43642, 56 T.D. 368 (1929)). As consistently interpreted by the Customs Service, this refers to any value as an article of commerce, not value relative to cost in a particular context. Although it may not be economically profitable for the importer here to export his waste scrap, the scrap clearly has commercial value. That value may be, and often is, reflected in the cost of processing charged by the manufacturer to whom the scrap will be abandoned. In addition to evidencing the commercial value of the scrap such agreement would likely violate the TIB condition prohibiting importation of goods for sale or sale on approval. At any rate, the fact that the scrap does have commercial value under standards consistently applied by the Customs

Service precludes a finding that the scrap does not have value within the meaning of subparagraph (b)(ii) of the TIB headnote.

The importer urges, alternatively, a Customs Service holding that liquidated damages under an 864.05, TSUS, entry will be mitigated, in those cases where exportation is not economically feasible, to the amount of duty that would have been payable on the scrap if imported in that condition. It is, however, not possible for the Customs Service to issue a ruling on prospective claims for mitigation of damages. Each such claim must be considered on its own merits. The importer's suggestion would involve the Customs Service in an effective evasion of the statutory TIB export or destroy requirement in these cases. There is no authority for such a disregard of the statute.

Reference is made to the recently enacted Public Law 95–508 which accords duty-free treatment to "metal articles imported to be shredded or otherwise processed in such a way as to render them fit only for recovery of their metal content." It is urged that Customs apply this provision to the amount of imported steel that resulted in scrap as a product of the manufacture. Inasmuch as the steel ingots might be eligible for duty-free entry if processed into scrap, the importer suggests Customs recognize an intent that 4 percent of a shipment be processed into scrap, and hold that such scrap may be retained by the U.S. manufacturer without violating the TIB.

Assuming the applicability of Public Law 95–508 to the steel here in question, it does not follow that the valuable waste resulting from the manufacture of TIB goods may be retained by the U.S. manufacturer. The statutory requirement for destruction or exportation is clear. It was not amended or otherwise affected by Public Law 95–508. Although the steel might be duty free in some circumstances it does not thereby avoid the statutory TIB requirements when entered under a temporary importation bond.

The importer's claim that any portion of the steel is imported to be processed in order that it be "fit only for recovery of * * * metal content" (Public Law 95–508) is not tenable. In fact, there is no intent to produce scrap; the intent is to produce steel bands, as a consequence of which some waste scrap may be generated. This fact is emphasized inasmuch as it would not be possible to designate what part of a steel shipment was intended for scrap and what part for production of steel bands. This law, and others relating to the duty status of scrap, are not relevant to the issue here. The temporary importation provision is a grant of privilege, and, as such, is strictly construed. The obligation to export or destroy valuable waste is clear. Any arrangement contemplating noncompliance with the statutory requirements would preclude entry under TIB. Failure to comply with the requirements, once entry was made, would result in a demand for

liquidated damages under the bond. Any possible mitigation would be a separate issue.

Although the TIB procedure is not proper in this case, the drawback law under section 1313, title 19, United States Code, appears applicable to the facts described. Under drawback, a manufacturer may manufacture articles with the use of imported merchandise and after the exportation of the articles, 99 percent of the duties paid on the imported merchandise used in the manufacturing process may be refunded as drawback upon compliance with part 22 of the Customs Regulations. Valuable waste resulting from the manufacturing process need not be destroyed or exported.

Holding.—When waste steel scrap, resulting from the manufacturing of steel ingots into steel bands, is retained by the U.S. manufacturer of the steel bands, the steel ingots are not eligible for entry into the U.S. under item 864.05, TSUS, a provision for temporary importation under bond.

(C.S.D. 80-81)

In-Bond Entries: Diamonds Entered Temporarily Free of Duty Under Bond for Evaluation, and If Suitable, for Cutting; Item 864.05, TSUS

Date: August 14, 1979
File: CON-9-R:CD:D MR 210708

Issue.—Whether diamonds may be entered under item 864.05, Tariff Schedules of the United States (TSUS), for evaluation, and, if found by the evaluation to be suitable for cutting?

Facts.—A firm imports diamonds into the United States under a temporary importation bond (TIB) for cutting. The diamonds are evaluated after entry and some are found to be unsuitable for cutting. The firm wishes to satisfy the terms of the TIB by exporting the diamonds without first cutting them.

Law and analysis.—Item 864.05, TSUS, lists "Articles to be repaired, altered, or processed (including processes which result in articles manufactured or produced in the United States)" as being eligible for temporary importation under bond. It has been held that cutting and polishing which results in a finished gemstone constitutes a process of manufacture or production. On the other hand, the evaluation of the diamonds to determine their suitability for cutting does not constitute a processing for the purposes of item 864.05.

In order to enter articles under item 864.05, there must be an intention at the time of entry that the articles will actually be repaired,

altered, or processed. If the diamonds must be evaluated after entry before the importer will know if they are actually going to be cut, then he cannot have the requisite intention at the time of entry.

Holding.—Diamonds may not be entered under item 864.05, TSUS, if the importer intends to cut the diamonds only if they are found after entry to be suitable for cutting.

Possible alternative.—Diamonds may be entered into a Customs manipulation warehouse, class 8, as explained in part 19 of the Customs Regulations (19 CFR, part 19). The diamonds may be transferred to another designated location for evaluation, as provided in section 562 of the Tariff Act of 1930, as amended (19 U.S.C. 1562). Those diamonds found to be suitable for cutting may then be withdrawn from the warehouse under item 864.05, TSUS, for cutting.

(C.S.D. 80–82)

Vessels: Whether a Self-Propelled Drilling Structure Is a Vessel

Date: August 14, 1979
File: VES-3-15-R:CD:C
103905 TL

This ruling concerns the classification of a self-propelled drilling structure, its equipment and stores, and articles delivered to it once it is attached to the U.S. Outer Continental Shelf.

Issues.—(1) Is a self-propelled foreign registered drilling structure which sails to the United States under its own power a vessel, as that term is used in general headnote 5(e), Tariff Schedules of the United States (TSUS)?

(2) If this structure is a vessel, is it and its equipment and stores dutiable when it enters a U.S. port?

(3) If this structure is a vessel, is it and its equipment dutiable once it is affixed to the seabed of the U.S. Outer Continental Shelf?

(4) Is foreign equipment delivered to the vessel dutiable after the vessel is affixed to the seabed of the U.S. Outer Continental Shelf?

(5) Would the answer to issue 4 be different if the equipment did not first pass through a U.S. port of entry?

Facts.—A foreign-flag, self-propelled drilling structure with equipment and stores aboard will sail to the United States and subsequently attach itself to the seabed of the U.S. Outer Continental Shelf. Once attached, drilling operations will begin.

Law and analysis.—Section 401(a), Tariff Act of 1930 (19 U.S.C. 1401(a)), defines the term "vessel" to include "every description of

water craft or other contrivance used, or capable of being used, as a means of transportation in water," except aircraft.

General headnote 5(e), TSUS, states that vessels which are not yachts or pleasure boats are not articles subject to the TSUS.

Section 1446 of title 19, United States Code (19 U.S.C. 1446), states:

> Vessels arriving in the United States from foreign ports may retain on board, without the payment of duty * * * other ships' stores, sea stores, and the legitimate equipment of such vessels.

The provisions of section 4(a) of the Outer Continental Shelf Lands Act (43 U.S.C. 1333(a)), extend the Customs and navigation laws to artificial islands and devices permanently or temporarily attached to the seabed which are erected onto the Outer Continental Shelf for the purpose of exploring for or developing its natural resources.

Section 401(a) indicates that if a drilling structure is used or can be used on water for transportation it is a vessel. This drilling structure will sail to the United States; it is therefore classifiable as a vessel. According to general headnote 5(e), vessels are not dutiable unless they are yachts or pleasure boats. The subject drilling structure is neither a yacht nor a pleasure boat. It is not, therefore, dutiable. If the equipment and stores which are carried aboard the vessel are retained on board, they are free of duty pursuant to section 1446.

C.S.D. 79–1 held that foreign-built articles (including drilling and production platforms) which are not vessels are dutiable when secured to or submerged onto the seabed of the Outer Continental Shelf. However, because the subject rig is a vessel it is not within the purview of C.S.D. 79–1 and thus is not dutiable.

The dutiable provisions of the TSUS are Customs laws. They are extended to artificial islands by section 4(a) of the Outer Continental Shelf Lands Act. Headquarters case 056583, dated May 11, 1978, held that when equipment is brought to an artificial island it is dutiable. Thus, foreign equipment which is delivered to the subject structure after it is attached will be dutiable. Of course if the foreign equipment is regularly imported into the Customs territory (entered and duty paid) and thereafter removed to a structure, it will not again be dutiable.

Additionally, T.D. 54281(1) holds that the coastwise laws apply to such structures during the time they are secured to or submerged onto the seabed of the Outer Continental Shelf for drilling operations. Accordingly, any merchandise or passengers transported between other coastwise points and these structures must be accomplished by coastwise qualified vessels, pursuant to 46 U.S.C. 883 and 289, respectively.

The arrival of a foreign vessel at a point within United States territorial waters subjects the vessel to certain requirements of the navigation laws. Local Customs officials should be consulted concerning these requirements.

Holdings.—(1) A self-propelled drilling structure which sails to the United States under its own power is a vessel, as this term is used in general headnote 5(e), Tariff Schedules of the United States.

(2) Equipment and stores which are on the vessel when it enters U.S. jurisdiction are not dutiable unless they are subsequently landed and delivered.

(3) A vessel is not dutiable when it is affixed to the seabed of the Outer Continental Shelf.

(4) Foreign equipment and stores delivered to a vessel secured to or submerged onto the Outer Continental Shelf to explore for, develop, or produce resources are dutiable when delivered directly from a foreign port.

(5) Foreign equipment and stores delivered to a vessel secured to, or submerged onto the Outer Coutinental Shelf to explore for, develop, or produce resources, are not dutiable when delivered if they are first imported into the Customs territory and duty is paid.

(C.S.D. 80-83)

Carrier Control: Transportation of Fish-Processing Supplies Between a U.S. Port and a Point Within U.S. Territorial Waters

Date: August 14, 1979
File: VES-3-17-R:CD:C
104111 JL

This ruling concerns the transportation of fish-processing supplies between a U.S. port and a point within U.S. territorial waters.

Issue.—May a foreign-built, U.S.-documented vessel transport salt between a U.S. port and a point within U.S. territorial waters and there transship it to a U.S.-built, U.S.-documented vessel for use in processing fish?

Facts.—It is contemplated that a noncoastwise-qualified, U.S.-documented vessel will be utilized to transport salt used for fish processing from a U.S. port to a position within U.S. territorial waters were it would tie up to a U.S.-built, U.S.-documented, fish-processing vessel. Upon tying up, the subject vessel will process the salt into brine and pump it into the fish-processing vessel where it would be used in processing fish. The requester asks if the foregoing activities

would violate any law or regulation administered by the Customs Service.

Law and Analysis.—Title 46, United States Code, section 883, prohibits the lading of merchandise on board a vessel at one point within the United States, including its territorial waters, and the subsequent unlading of the merchandise at another point in territorial waters (to another vessel or otherwise) or at another port in the United States, or any other point embraced within the coastwise laws by a vessel not qualified to engage in the coastwise trade.

Section 4.80b(a), Customs Regulations, as amended July 19, 1979 (see 44 F.R. 140, p. 42178), states in part that

> merchandise is not transported coastwise if at an intermediate port or place *other than a coastwise point* * * * it is manufactured or processed into a new and different product, and the new and different product thereafter is transported to a coastwise point. [Italic supplied.]

In the instant case, the salt is processed into brine at a coastwise point where it is then transshipped to another vessel. This is a strictly coastwise movement not conforming to the exception stated in section 4.80b(a). Accordingly, there is no need to consider whether the processing of salt into brine yields a new and different product within the meaning of the regulation.

The transportation of the salt from a U.S. port to a point within territorial waters and its subsequent transshipment at that point to another vessel constitutes a movement in coastwise trade. Accordingly, pursuant to section 883, a vessel not qualified to engage in the coastwise trade cannot engage in the contemplated activity without incurring penalties provided by the statute.

Holding.—The carriage of salt from a U.S. port to a point within U.S. territorial waters where it is processed into brine and transshipped to another vessel is a coastwise transportation reserved to those vessels documented to engage in the coastwise trade pursuant to 46 U.S.C. 883.

(C.S.D. 80-84)

Personal Exemptions: Tools of Trade

Date: August 14, 1979
File: BAG-5-05-R:E:E
710375 HS

This ruling concerns a "tools of trade" exemption from duty for video equipment exported and returned to the United States by a corporation.

Issue.—Can foreign-made video equipment that is exported and then returned to the United States by a corporation be exempt from duty under item 810.20 of the Tariff Schedules oı the United States as tools of trade?

Facts.—A corporation purchased foreign-made video equipment in the United States. The video equipment is used for safety surveillance of reactor technicians while they work in oxygen-free environments and is utilized during large overseas jobs. The equipment is assigned to the director of video service training who is responsible for its whereabouts and proper operation. The director requests whether the corporation may be exempt from paying duty each time it reimports the equipment.

Law and analysis.—There is no specific provision that exempts from duty merchandise consigned to and entered by or for the account of a corporation. Item 810.20 of the Tariff Schedules of the United States (1978) provides duty-free entry for tools of trade, occupation, or employment which have been taken abroad by or for the account of any person arriving in the United States for a foreign country. This is a personal exemption available to individuals.

A corporation could bring equipment into the United States under this exemption if an individual of the corporation takes the equipment in and out of the country in his own name. T.D. 53136 makes this possible by providing that ownership of tools of trade is not a condition for free entry. Merchandise of domestic or foreign origin exported from the United States and reimported by the same individual, even though the equipment or tools are not his personal property, can qual fy for free entry under item 810.20.

In this case, the video equipment can be exempt from duty as tools of trade if the equipment is exported and returned to the United States by or for the account of an individual empolyee of the corporation, such as the director of video service/training. The individual must, however, be in the foreign country when the equipment is in the foreign country and must return to the United States when the goods return.

Holding.—Foreign-made video equipment that is exported and then returned to the United States by an individual employee of a corporation may be exempt from duty under item 810.20 of the Tariff Schedules of the United States as tools of trade.

(C.S.D. 80-85)

Brokers: Power of Attorney; Appointment of Subagent

Date: August 14, 1979
File: BRO-4-01-R:E:E
710803 MK

Facts.—A customhouse broker licensed in district A files entries in his name as the importer of record. He is not licensed in district B. He proposes to grant a power of attorney to a broker in that district, to prepare entries naming the broker in district A as the importer of record. The broker in district B asks whether this proposal is permissible under Customs regulations.

Issue.—May a broker in district A grant a power of attorney to a broker in district B (where he is not licensed) to file entries naming the broker in district A as the importer of record?

Law and analysis.—Section 141.43 of the regulations provides that the grantee of a power of attorney from a resident principal cannot appoint a subagent unless the grantee is a customhouse broker, in which case the power of attorney may empower the broker to act through any of his licensed officers or authorized employees.

In the proposed arrangement, the broker in district B is not an employee of the broker in district A, but would, nonetheless, be acting as agent of the broker in district A. We believe such arrangement is precluded by section 141.43 of the regulations.

This situation is distinguishable from that in C.S.D. 95-111, in which we held that section 141.43 of the regulations would not preclude an importer from issuing a power of attorney to a broker in one district, empowering that broker to issue, on the importer's behalf, powers of attorney to brokers in other districts because those brokers, once appointed, would act solely on behalf of the importer, and will bear no agency relationship to the broker who appointed them.

Holding.—A broker in one district may not, by power of attorney, authorize a broker in another district (where he is unlicensed) to file entries naming him as importer of record.

(C.S.D. 80-86)

Administrative Exemptions: Applicability of 19 U.S.C. 1321(a)(1) to Informal Entries and Baggage Declarations

Date: August 14, 1979
File: ENT-1-01-R:E:E
710812 M

This ruling concerns the applicability of the provision of 19 U.S.C. 1321(a)(1) to informal entries and baggage declarations.

Issue.—May Customs, pursuant to 19 U.S.C. 1321(a)(1), disregard a difference of less than $10 between the amount deposited on an informal entry or a baggage declaration and the amount actually due?

Facts.—A District Director points our two occurrences that happened recently in his district. In the first instance, an informal entry was presented to Customs cashier who deposited the check and forwarded the permit copy to the Customs inspector for examination and delivery. Upon examination the Customs inspector discovered that the merchandise was incorrectly classified and that less than $10 additional duty should be collected.

In another situation, a passenger presented his baggage declaration to a Customs inspector and paid duties. Subsequently, the Customs inspector reviewed the baggage declaration after the passenger had left the inspection area and discovered that additional duty less than $10 was due.

Law and analysis.—Section 205(a) of Public Law 95-410 amended 19 U.S.C. 1321(a)(1) to provide that in order to avoid expense and inconvenience to the Government disproportionate to the amount of revenue that would be otherwise be collected, Customs may disregard a difference of less than $10 between the amount of duties or taxes deposited with respect to any entry of merchandise and the total amount of duties and taxes actually accruing on such merchandise. Prior to this amendment, 19 U.S.C. 1321(a)(1) permitted a difference of only less than $3.

19 U.S.C. 1321(a)(1) states that its provision applies to any entry of merchandise. We believe this terminology to be broad enough to cover informal entries and baggage declarations. Since in both instances the difference between the amount of duties deposited and the actual amount of duties due was less than $10, Customs had the authority pursuant to 19 U.S.C. 1321(a)(1) to disregard the difference.

Holding.—19 U.S.C. 1321(a)(1), which permits Customs to disregard a difference of less than $10 between the amount of duties deposited and amount of duties actually due applies to informal entries and baggage declarations.

(C.S.D. 80-87)

Warehouse: Lease of Space in Class 2 Private Bonded Warehouse

Date: August 16, 1979
File: WAR-1-03-R:CD:D
210677 JB

Issue.—Whether the owner and proprietor of a private bonded warehouse (class 2) may lease space in the warehouse to a third party in order that goods in the warehouse, pledged as collateral, be secured by the third party.

Facts.—The proprietor and owner of a class 2, importer's private bonded warehouse, requests a collateral control company (company) to take possession of some of his goods stored in the warehouse, in order to secure a loan. The company seeks to lease from the warehouse proprietor that portion of the warehouse in which the pledged goods are located. The right to withdraw the goods will be transferred to the company (19 CFR 144.21–144.28) but the warehouse owner will retain title to the merchandise. This is essentially a paper transaction, with no actual movement of goods contemplated. The company believes that it needs the lease to conduct its operations properly, and inquires whether such an agreement would be permissible.

Law and analysis.—The transfer of the right to withdraw inventory from the warehouse is clearly provided for in the Customs Regulations, sections 144.21–144.28. (19 CFR 144.21–144.28) Inasmuch as the goods will remain the legal property of the warehouse owner, the transfer does not conflict with the requirement that a class 2 warehouse be used exclusively for storage of merchandise owned by or consigned to the proprietor.

The collateral company suggests that Customs revenue would be thoroughly protected by its general term bond, and by the obligations arising from its status as transferee. Customs revenue as to the duties owed would be so protected but whether the obligations assumed in the proprietor's warehouse bond (CF 3581) by the warehouse owner's surety would cover space leased to another party is not clear. Assuming that it would, or that surety would stipulate that coverage would so extend, the threat to Customs revenue might be obviated.

The proprietor of a Customs bonded warehouse operates under a bond approved by the Government (19 CFR 19.2). Application for such a bond must be made by an individual proprietor and approved by the Government. The bond is subject to revocation or suspension for good cause (19 CFR 19.3). There is created a relationship of reciprocal rights and duties between a proprietor and the Government; if a proprietor were permitted to transfer his bond to a third party

such person could, in effect, become a warehouse proprietor without making application to or being approved by the Government. Although the Customs revenue would still be secure, the control over whom, personally, would be granted the bond to operate the warehouse facility would be lost. It is the position of the Customs Service that no substantial reason exists to relinquish that authority; in fact, it is in the public interest that the Government maintain control over the bonding of warehouse proprietors.

Holding.—The owner and proprietor of a class 2 Customs bonded warehouse may not lease space in that warehouse to a third party.

(C.S.D. 80-88)

Country of Origin: Frozen Orange Juice Concentrate Reconstituted in Canada from Brazilian or American Concentrate

Date: August 17, 1979
File: MAR-2-05-R:E:E
710823 HS

This ruling concerns country-of-origin marking on frozen orange juice concentrate that is reconstituted in Canada.

Issue.—How should frozen orange juice concentrate that is reconstituted in Canada from either Brazilian or Florida concentrate be marked if on the container in which the orange juice is sold appears the name of a U.S. distributor?

Facts.—Frozen orange juice concentrate from either Florida or Brazil or a blend of concentrate from both areas will be reconstituted in Canada. The container in which the orange juice will be sold will bear the name of a U.S. distributor.

Law and analysis.—Section 304 of the Tariff Act of 1930, as amended (19 U.S.C. 1304) provides in general that all articles of foreign origin imported into the United States be legibly and conspicuously marked to indicate the English name of the country of origin to an ultimate purchaser in the United States.

Section 134.1, Customs Regulations, defines "country of origin" as the country of manufacture, production, or growth of any article of foreign origin entering the United States. Further work or material added to an article in another country must effect a substantial transformation in order to render such country the country of origin.

In this case, frozen orange juice concentrate from either Brazil or Florida will be shipped to Canada where it will be reconstituted. Reconstitution of the orange juice concentrate is considered a substantial transformation of the frozen concentrate as the concentrate

322-277 O - 80 - 4

is changed into a new and different product—juice. Therefore, the reconstituted orange juice should be marked with Canada as the country of origin.

The container in which the orange juice will be sold will be marked "Distributed by" followed by the name of a U.S. company. Section 134.46 of the Customs Regulations provides that in any case in which the words "United States," or "American," the letters "U.S.A.," any variation of such words or letters, or the name of any foreign country or locality other than the country or locality in which the article was manufactured or produced, appear on an imported article or its container, there shall appear legibly and permanently, in close proximity to such words, letters or name, and in at least a comparable size, the name of the country of origin preceded by "Made in," "Product of," or other words or similar meaning. Therefore because the name of the U.S. distributor, probably followed by its U.S. address, will appear on the container, there shall appear legibly and permanently, in close proximity to such words and in at least a comparable size, the words "Packed in Canada," or similar words.

Holding.—The country of origin of frozen orange juice concentrate reconstituted in Canada from either Brazilian or Florida concentrate or a blend of the two is Canada. If the orange juice will be in a container that bears the name and address of a U.S. distributor, there shall appear legibly and permanently, in close proximity to the name and address of the distributor, and in at least comparable size, the words "Packed in Canada," or similar words.

(C.S.D. 80-89)

Prohibited and Restricted Importations: Trademark Infringement; Conflict Between Marks Registered With U.S. Patent and Trademark Office

Date: August 17, 1979
File: TMK-3-R:E:E
710835 MC

This ruling concerns the applicability of the prohibition set forth in section 526 of the Tariff Act of 1930, as amended (19 U.S.C. 1526), against the importation of merchandise bearing resemblance to an American trademark.

Issue.—Whether the importation of shirts bearing the registered service mark "Sutton Place" infringes upon the registered and recorded trademarks "Sutton," "Mr. Sutton," and "Sutton of California" in violation of section 526 of the Tariff Act of 1930, as amended (19 U.S.C. 1526).

Facts.—Our New York office was contacted by Sutton Shirt Corp. concerning possible infringement of their trademark by the importation of shirts using the words "Sutton Place." Sutton Shirt Corp. owns the registered trademarks "Sutton," "Sutton of California," and "Mr. Sutton," all recorded with Customs.

The submitted allegedly infringing shirt sample employs the mark "Sutton Place" with the design of a horsedrawn carriage, a lamppost, and several buildings on both the label on the inside back of the shirt and the plastic packaging of the individual shirt. This mark is registered as a service mark on the Principal Register of the U.S. Patent and Trademark Office. No such mark has been recorded with Customs.

Law and analysis.—Section 45 of the act of July 5, 1946 (commonly referred to as the Lanham Act; 15 U.S.C. 1127) defines a service mark as "a mark used in the sale or advertising of services to identify the services of one person and distinguish them from the services of others." It has been generally held that goods themselves, as distinguished from services or goods provided incidental to services, cannot be the objects of a service mark. Thus the issue is raised as to whether the use of the service mark "Sutton Place" on shirts is a proper use of such a mark. Resolution of such an issue is not within the jurisdiction of the U.S. Customs Service.

Accordingly, it is the policy of the U.S. Customs Service to refrain from reaching the issue here and to proceed on the assumption that "Sutton Place" is a properly registered service mark.

Section 526 of the Tariff Act of 1930, as amended (119 U.S.C. 1526) and part 133, subpart A, of the Customs Regulations (19 CFR 133.1–133.7) provide for the recordation of trademarks with Customs for import protection. Section 133.21 of the Customs Regulations provides in part:

> Articles of foreign or domestic manufacture bearing a mark or name copying or simulating a recorded trademark or tradename shall be denied entry and are subject to forfeiture as prohibited importations.

The Trademarks "Sutton," "Mr. Sutton," and "Sutton of California" have all been recorded with Customs and require import protection. However, the issue is raised here as to whether use of a service mark can constitute infringement of a trademark where both marks have been registered with the U.S. Patent and Trademark Office. When there is an apparent conflict between two marks, both of which are registered with the U.S. Patent and Trademark Office, it is the policy of the Customs Service not to reach the issue of whether one mark infringes upon the other. Accordingly, the trademark owner will have to seek other means for redress of his complaint.

Holding.—The Customs Service will not reach issues concerning conflicts between marks registered with the U.S. Patent and Trademark Office. The allegedly infringing goods will not be detained.

(C.S.D. 80–90)

Classification: Baseball Caps

Date: August 20, 1979
File: CLA-2:R:CV:MA
062308 C

In a letter dated May 18, 1979, you stated a belief that extensive quantities of baseball caps are being misclassified at west coast ports.

It is your position that merely affixing a piece of decorative braid on the front of a baseball cap does not qualify that cap for classification under the provision for headwear, of manmade fibers, wholly or in part of braid in item 703.05, Tariff Schedules of the United States (TSUS), with duty at the rate of 18 perent ad valorem.

General headnote 9(f), TSUS, provides that " 'in part of' or 'containing' means that the article contains a significant quantity of the named material."

Our interpretation of the word significant as used in the aforecited headnote implies a degree of usefulness, being meaningful or necessary, or denoting employment for a reason. Thus, an item would contain a significant quantity of braid if that portion or quantity serves a useful purpose and/or increases the salability of the article.

Based on our telephone conversations with you, we realize that you are specifically concerned with the tariff treatment of baseball caps having noncontrasting braided stitching or noncontrasting tubular braid on the visor or front panels.

It is our position that noncontrasting braided stitching or noncontrasting tubular braid on or across the visor or front panels of baseball caps does not serve to ornament these caps inasmuch as it cannot be readily seen.

For this reason baseball caps of manmade fibers with noncontrasting braided stitching or noncontrasting tubular braid are not "in part of braid" and do not qualify for classification under item 703.05, TSUS.

Consequently, baseball caps of manmade fibers having noncontrasting braided stitching or noncontrasting tubular braid on or across the visor or front panels would be dutiable at the rate of 25 cents per pound plus 20 percent ad valorem under item 703.10, TSUS, if knit, or at the rate of 25 cents per pound plus 20 percent ad valorem under item 703.15, TSUS, if not knit.

This decision is being circulated to all Customs officers in order that the merchandise may be uniformly so classified at each port of which it may be entered.

(C.S.D. 80-91)

Generalized System of Preferences: Substantial Transformation; Electroplating

Date: August 20, 1979
File: R:CV:S JLV
055687

This ruling concerns certain electrolytes and anodes used in an electroplating process in a beneficiary developing country (BDC) and asserted to be substantially transformed constituent materials or direct costs of processing operations under the Generalized System of Preferences (GSP).

Issues.—(1) Are potassium gold cyanide, nickel chloride, and nickel anodes substantially transformed into new and different articles of commerce during an electroplating process so as to be materials produced in a BDC within the meaning of section 503(b)(2)(A)(i) of the Trade Act of 1974?

(2) Are hydrochloric acid, potassium citrate, and platinum-clad titanium anodes direct costs of processing operations in a BDC within the meaning of section 503(b)(2)(A)(ii) of the Trade Act of 1974 if such materials are consumed in an electroplating process without becoming part of the finished product?

Facts.—An article eligible for duty-free treatment under the GSP will be electroplated in a BDC with the use of nickel chloride, nickel anodes, potassium gold cyanide, hydrochloric acid, potassium citrate, and platinum-clad titanium anodes. All of these materials will be imported into the BDC. The processing to be performed in the BDC is described as follows: Cleaning of the article to be plated, rinsing twice with water, dipping in hydrochloric acid, rinsing twice more with water, electroplating with nickel, rinsing three times with water, electroplating with gold, and rinsing and drying.

The pure nickel deposit will provide a suitable base for the 22-karat gold plating. The source of the nickel plating will be the nickel chloride and nickel anodes, and the source of the gold plating will be the potassium gold cyanide. The hydrochloric acid, potassium citrate, and platinum-clad titanium anodes will be consumed in the processing and will not become part of the plated article.

Law and analysis.—Under section 503(b)(2)(A)(i), Trade Act of 1974, the cost or value of materials used in the production of a

GSP-eligible article is includable in the 35-percent value-added requirement for that article if the materials are produced in the BDC which manufactures the eligible article. To be such materials, section 10.177(a) of the Customs Regulations (19 CFR 10.177(a)) requires that materials which are not wholly the growth, product, or manufacture of the BDC must be substantially transformed in the BDC into new and different articles of commerce prior to being used in the manufacture of the eligible article.

The gold or nickel salts are chemical compounds which, when placed into an electrolytic solution, are dissociated into positive and negative ions. The positive gold or nickel ions are then plated out as free metal onto an article by passing an electric current through the solution. Similarly, the nickel anode is soluble in the electrolyte and is a source of ionic nickel which is then plated out as a free metal during the nickel-plating process.

The Customs Service is of the opinion that there are no constituent materials which come into existence as intermediate entities. Under 19 CFR 10.177(a)(2) it is presupposed that the constituent materials, which are new and different articles of commerce produced by a substantial transformation, have a separate existence apart from their imported condition and from the exported article. The imported materials in question are deposited directly by the electroplating process onto the eligible article. They do not become intermediate products having a separate existence apart from their condition as materials imported into the BDC or as integral parts of the eligible article.

To hold otherwise would invite clearly unacceptable analogous arguments such as the argument that foreign-made paint, for example, becomes a substantially transformed constituent material by virtue of the chemical changes associated with drying and curing after application to a product of a BDC.

As to the second issue, section 503(b)(2)(A)(ii) of the Trade Act of 1974 provides that direct costs of processing operations are includable in the 35 percent value-added requirement under the GSP. Section 10.178(a) of the Customs Regulations (19 CFR 10.178(a)) states that "direct costs of processing operations" means those costs either directly incurred in, or which can be reasonably allocated to, the growth, production, manufacture, or assembly of the specific merchandise under consideration.

The hydrochloric acid, potassium citrate, and platinum-clad titanium anodes are consumed in the electroplating process without becoming part of the eligible article. However, these materials are essential to the processing operation. Consequently, the costs of such materials or supplies, whether imported or domestic, are costs directly

incurred in the process by which the eligible article is electroplated in the BDC.

Holdings.—(1) The electroplating process by which the metals contained in nickel chloride, potassium gold cyanide, and nickel anodes are plated out as free metals on a GSP-eligible article does not result in substantially transformed constituent materials within the law and regulations of the GSP.

(2) The costs of the hydrochloric acid, potassium citrate, and platinum-clad titanium anodes which are consumed during the electroplating of an eligible article are direct costs of processing operations within the law and regulations of the GSP.

(C.S.D. 80-92)

Entries: Commercial Invoice Required for Merchandise Subject to Free or Specific Rate of Duty

Date: August 23, 1979
File: ENT-1-01-R:E:E
710430 M
710689 M
710712 M
710889 M

This ruling concerns the necessity of a foreign commercial invoice for merchandise subject to a free rate or specific rate of duty.

Issue.—Is a foreign commercial invoice required for merchandise subject to a free rate or specific rate of duty?

Facts.—An importer of crude rubber and an importer of crude oil have been importing and entering their merchandise at a Customs port of entry. In the past, the District Director has permitted them to file a pro forma invoice with their entries. Recently, the District Director has notified them that they are required to file a foreign commercial invoice with their entries. They object because in some instances the merchandise involved is sold in transit and the seller does not wish to provide them with the original invoice. In addition, they believe that such commercial invoice is unnecessary, and is not required by law or regulations.

Law and analysis.—19 U.S.C. 1484(b) basically authorizes Customs to prescribe by regulations the type of invoice needed for a particular transaction. Prior to T.D. 79-221, section 141.83(d) (3) and (4) of the Customs Regulations provided that a commercial invoice is not required for merchandise subject to a specific rate of duty, merchandise unconditionally free of duty, or in certain instances merchandise conditionally free of duty. However, if such invoice was in the posses-

sion of the importer or available to him, he was required to submit it. T.D. 79–221, published in the Federal Register on August 9, 1979, deleted subparagraphs (3) and (4) of section 141.83(d), and therefore eliminated the exception of merchandise subject to a specific rate of duty, or certain merchandise free of duty to the requirement of a commercial invoice.

Prior to T.D. 79–221, section 141.86(c) of the Customs Regulations provided that in the case of merchandise sold while in transit from the port of exportation to the port of entry, Customs should receive the original invoice which would reflect the transaction pursuant to which the merchandise actually began its journey to the United States, along with a statement showing the price paid for each item by the person who purchased the merchandise while the merchandise was in transit. T.D. 79–221 added a sentence to section 141.86(c) providing that if the original invoice cannot be obtained, a pro forma invoice showing the values and transactions reflected by the original invoice must be filed together with the resale invoice or statement.

Furthermore, sections 141.91 and 141.92 of the Customs Regulations set forth certain circumstances when the required invoice may be presented subsequent to entry or may be waived.

Thus, even prior to T.D. 79–221, a commercial invoice was required for merchandise subject to a specific rate of duty or free rate of duty when the importer had such invoice in his possession or such invoice was available to him. Both importers indicate in their correspondence that even when such commercial invoices were in their possession, they did not submit them to Customs, because Customs would accept the pro forma invoice.

As explained in the preamble of T.D. 79–221, Customs believes there is no inherent reason why merchandise subject to free or specific rates of duty should be exempt from the requirements to furnish a commercial invoice. Some of the most strategic and sensitive commodities, such as petroleum and sugar, fall into this category. A pro forma invoice filed in lieu of a commercial invoice may have data sufficient for duty purposes, but it seldom entirely satisfies statistical requirements. Customs believes that commercial invoices are available for most of this merchandise, but were not submitted simply because Customs would accept a pro forma invoice for such merchandise. Customs doubts that the rate of duty involved determines whether or not a commercial invoice is prepared. Therefore, for such merchandise, a commercial invoice is required.

In regard to merchandise sold in transit, Customs has recognized the problem incurred by the purchaser in receiving the original invoice. Customs has therefore issued in the past rulings which have permitted the seller of merchandise which was in transit to the United

States to submit to the District Director, at the appropriate port of entry involved, the foreign supplier's invoice so that the in-transit seller would not have to reveal this information to the importer. In such instances, the importer could enter for consumption the merchandise on the basis of the in-transit seller's invoice to him provided the in-transit seller furnished to Customs the foreign supplier's invoice prior to acceptance by Customs of the entry. As late as May 31, 1977, this information was disseminated to the field.

Furthermore, T.D. 79-221 recognizes the extreme difficulty when merchandise is sold in transit of obtaining the original invoice and has authorized the practice in regard to in-transit shipments of permitting a pro forma invoice to be filed in lieu of the original invoice, when such invoice cannot be obtained.

In regard to sections 141.91 and 141.92 of the Customs Regulations which permitted the late filing of the invoice or the waiving of the invoice, these two provisions should be applied on a case-by-case basis and should not be used as a blanket authority for permitting the late filing of or waiving of required invoices.

Both importers also request the type of information required to be shown on the commercial invoice for Customs purposes. The information necessary to be shown on a commercial invoice is set forth in section 141.86(a) of the Customs Regulations.

Holding.—For those entries filed prior to T.D. 79-221, published on August 9, 1979, a commercial invoice is required for merchandise subject to a specific rate of duty or certain merchandise subject to a free rate of duty, if such invoice was in the possession of the importer or otherwise available to him. For those entries filed on August 9, 1979, or later, a commercial invoice would be required for such merchandise, pursuant to T.D. 79-221.

(C.S.D. 80-93)

Duty Assessment: Dutiability of Merchandise Transferred From a Foreign Trade Zone to an Offshore Installation on Outer Continental Shelf

Date: August 24, 1979
File: FOR-1-R:CD:D
210871 K

Issue.—Whether foreign merchandise transferred from a foreign trade zone to an installation 18 miles off the U.S. shore is subject to duty.

Facts.—Manmade fiber rope, a product of the United Kingdom, is shipped on consignment to a foreign trade zone located at New

Orleans, La., without liability for duties. Part of all of the shipment may then be sent to an offshore installation.

Law and analysis.—Under general headnotes 1 and 2 and headnote 1, part 1, schedule 8, Tariff Schedules of the United States (TSUS), all articles imported into the Customs territory of the United States are subject to duty unless specifically exempted. General headnote 2 (TSUS) defines the term "Customs territory of the United States" to include the States, the District of Columbia, and Puerto Rico.

However, section 1333(a)(1), title 43, United States Code, also states in pertinent part the following:

> The Constitution and laws and civil and political jurisdiction of the United States are extended to the subsoil and seabed of the Outer Continental Shelf and to all artificial islands, and to all installations and other devices permanently or temporarily attached to the seabed, which may be erected thereon for the purpose of exploring for, developing, or producing resources therefrom, or any such installation or other device (other than a ship or vessel) for the purpose of transporting such resources, to the same extent as if the Outer Continental Shelf were an area of exclusive Federal jurisdiction located within a State * * *.

Accordingly, foreign merchandise transferred from a foreign trade zone to an installation on the Outer Continental Shelf would be considered as merchandise imported into the Customs territory of the United States and subject to any applicable duties.

Holding.—Foreign merchandise transferred from a foreign trade zone to an installation (e.g., an offshore drilling platform) on the Outer Continental Shelf is subject to applicable duties, if any.

(C.S.D. 80-94)

In-Bond: Importer's Liability When In-Bond Merchandise Is Not Properly Exported

Date: August 29, 1979
File: VES-8-01-R:CD:C
104130 JL

To: Regional Commissioner of Customs, Houston, Tex.
From: Acting Director, Carriers, Drawback and Bonds Division.
Subject: Your memorandum: Outward bound vessel's requirement to furnish copies of in-bond documents ENF-4-0 GFD: July 11, 1979.

We have reviewed a copy of the above referenced memorandum which was directed to all District Directors in your region.

The memorandum discusses our ruling of July 18, 1979, concerning the (ship's name) which was assessed penalties for failure to furnish copies of in-bond documents covering cargo laden on it for exportation. The ruling held that there was no requirement in the Customs Regulations that such documents be furnished by an exporting carrier which merely had in-bond merchandise delivered to it. It was pointed out in the law and analysis section of the ruling that of the carriers involved, the initial bonded carrier was to be assessed penalties in the instance where the Customs form 7512 was not furnished. There was, of course, no discussion of other parties which might have penalties assessed when proof of exportation was not furnished.

In the last paragraph of the memorandum, it is stated:

> Although we believe that a strong case can be made to assess liquidated damages against the importer who filed the transportation and exportation entry in these instances, claims for liquidated damages will be assessed against the initial bonded carrier until such time as:
>
> (1) A regulatory amendment, with appropriate bond liabilities, can be made to require the outward bound carrier to provide the in-bond document, or
>
> (2) A clarification of the ruling is received in this regard as to the liability of the importer, as opposed to the bonded carrier.

As to (1), the letter covering our ruling of June 18, stated that "for reasons which are obvious in the enclosed ruling, we do not consider amendments to the Customs Regulations to be necessary." We have not been persuaded otherwise in the interim.

Regarding (2), parties other than carriers were not at issue in the (name) case. An in-bond shipment involves a bond (or carnet) given by an importer. Failure to properly export the bonded merchandise gives rise to a breach of the bond with its attendant right on the part of Customs to demand liquidated damages. On this subject, we are enclosing a copy of a letter sent to Representative (name) which involved a complaint filed by a customhouse broker who objected to importers being assessed liquidated damages when carriers failed to effect proper exportation. Although the subject matter of the complaint was TIB entries, the response applies as well to all in-bond transactions.

(C.S.D. 80-95)

Carrier Control: Exemption From Special Tonnage Tax and Light Money: Netherlands Antilles

Date: August 2, 1979
File: VES-11-11-RRUCDC
104163

(Telegram)

To All Regional Commissioners:

The State Department has advised the Department of the Treasury that vessels of the Netherlands Antilles should be exempted from the payment of special tonnage tax and light money. Action to add the Netherlands Antilles to the list of countries in section 4.22 CR (Customs Regulations) has been initiated. Pending the amendment to the regulations and on the basis that the exemption will be retroactive no special tonnage tax and light money should be assessed against Netherlands Antilles vessels arriving in any Customs region.

(C.S.D. 80-96)

Carrier Control: Use of Foreign-Flag Tugs and Submersible Barges To Tow or Transport Foreign-Flag Mobile Drilling Rig Between Coastwise Points

Date: August 29, 1979
File: VES-3-07-R:CD:C
VES-3-15
VES-10-03
104027 MKT

This ruling concerns the permissibility of the use of a foreign-flag tug to tow a foreign-flag mobile drilling platform between coastwise points or between a coastwise and a foreign point and the use of a foreign-flag submersible barge to support the mobile drilling platform during a portion of or the entire tow.

Issues.—(1) Whether title 46, United States Code, section 316(a), prohibits a foreign-flag tug from towing a foreign-flag mobile drilling platform between coastwise points.

(2) Whether section 316(a) of title 46, prohibits a foreign-flag tug from towing a foreign-flag submersible barge laden with a foreign-flag mobile drilling platform between coastwise points.

(3) Whether section 316(a) prohibits a foreign-flag tug from towing a foreign-flag submersible barge laden with a foreign-flag mobile drilling platform from a coastwise point to a foreign point and from

continuing to tow the mobile drilling platform without the barge to another coastwise point.

(4) Whether title 46, United States Code, section 883, prohibits the use of a foreign-flag submersible barge to support a foreign-flag mobile drilling platform while the barge is towed between coastwise points.

(5) Whether section 883 of title 46, prohibits the use of a foreign-flag submersible barge to support a foreign-flag mobile drilling platform while the barge is towed between a coastwise and a foreign point when the mobile drilling platform will continue to be towed to a coastwise point.

Facts.—There are three foreign-flag vessels involved in this case, a mobile drilling platform, a submersible barge, and a tug. The foreign-flag mobile drilling platform is to be moved from one coastwise port to another. To protect it from weather damage a foreign-flag submersible barge will be used to transport the platform. A foreign-flag tug will tow the barge. To accomplish this, the mobile drilling platform will be maneuvered over the aft portion of the partially submerged barge. Then the barge will be deballasted until it bears the weight of the mobile drilling platform. The two vessels will be secured together and towed to their destination as described below. The mobile drilling platform will not carry passengers or merchandise.

Three possible methods are contemplated to move the platform from one coastwise point to another. In the first method, the tug will tow the platform between those points without using a barge. In the second method, the tug will tow the barge laden with the platform between coastwise points. In the third method, the tug will tow the barge laden with the platform from a coastwise point to a foreign point (e.g., off Canada or Mexico). Then the tug will continue to tow the platform to a coastwise point without the use of the barge.

Law and analysis.—(1), (2), and (3) Section 316(a) of title 46 prohibits a foreign-flag vessel from towing a vessel other than a vessel of foreign registry or a vessel in distress between coastwise points. Title 19, United States Code, section 1401(a) defines a "vessel" to include" * * * every description of water craft or other contrivance used, or capable of being used, as a means of transportation in water * * *." The Customs Service has previously ruled that this mobile drilling platform is a vessel within the meaning of section 1401(a) of title 19 for purposes of duty assessment. We also consider this mobile drilling platform to be a vessel within the meaning of section 316(a) when used as a means of transportation in water. Therefore, since the mobile drilling platform and the submersible barge are both foreign-flag vessels, section 316(a) will not prohibit a

foreign-flag tug from towing either or both vessels between coastwise points or between a coastwise and a foreign point.

(4) and (5) Section 883 of title 46, prohibits a foreign-flag vessel from transporting merchandise between coastwise points, either directly or via a foreign port, or from transporting merchandise for any part of its transportation between those points. The mobile drilling platform will not carry passengers or merchandise and you do not indicate that the submersible barge will carry anything other than the mobile drilling platform. We therefore address the issue of whether the mobile drilling platform is considered merchandise within the meaning of the coastwise laws when it is transported by the submersible barge.

The determination that an object is a vessel within the meaning of section 1401(a) of title 19 or for the purposes of section 316(a), does not prevent it from being considered merchandise within the meaning of section 883 of title 46. The Customs Service has previously considered vessels carried as cargo on another vessel to be merchandise within the meaning of that statute. In this case, because the barge will transport, bear the weight of and be secured to the drilling platform, we consider the barge to be transporting merchandise in violation of section 883 when it carries the platform from one coastwise point to another.

Section 883 does not prohibit the submersible berge from transporting the mobile drilling platform from a coastwise point to a foreign point (e.g., off Canada or Mexico) after which the tug will tow the platform without the barge to another coastwise point. This is because the platform will not be unladen as merchandise at a coastwise point but at a foreign point, and subsequently the platform will be towed as a vessel to the United States. The character of the platform will change from merchandise to a vessel at the foreign point.

Holding.—(1), (2), and (3) Section 316(a) of title 46, does not prohibit a foreign-flag tug from towing a foreign-flag mobile drilling platform or a foreign-flag submersible barge, whether laden with or without the platform, between points within the coastwise laws or between a coastwise and a foreign point.

(4) Section 883 prohibits the use of a foreign-flag barge from transporting a foreign-flag drilling platform between points within the coastwise laws.

(5) Section 883 does not prohibit the use of a foreign-flag submersible barge to support a foreign-flag mobile drilling platform while the barge is towed between a coastwise point and a foreign point when the mobile drilling platform will continue to be towed to a coastwise point.

(C.S.D. 80-97)

Prohibited and Restricted Importations: Trademark Infringement: Plastic Bags With Mark Substantially Likely To Cause Confusion

Date: August 31, 1979
File: TMK-3-R:E:E
709577 SO

This ruling concerns the applicability of the prohibition set forth in section 42 of the act of July 5, 1946 (commonly referred to as the Lanham Act, 60 Stat. 440; 15 U.S.C. 1124), against the importation into the United States of goods bearing infringing marks or names.

Issue.—Would the importation of PVC bags bearing a design infringe upon the rights of the owner of the registered Design trademark for trunks, valises, traveling bags, satchels, hat boxes, and shoe boxes used for luggage, handbags, and pocketbooks.

Facts.—PVC bags bearing a design which may be described as the letters "P" and "C" superimposed one on the other and surrounded by a fleurs-de-lis pattern, manufactured in Italy, have been imported. Our New York regional office considered these bags to be an infringement upon the distinctive trademark, the letters "L" and "V" superimposed one on the other and surrounded by a fleurs-de-lis pattern, which was initially registered with the U.S. Patent Office on September 20, 1932, by the trademark owner, Vuitton et Fils S.A., a French corporation. This registration is currently valid and fully enforceable and has been recorded with Customs for import protection since June 20, 1978. The trademark registration is for trunks, valises, traveling bags, satchels, hat boxes and shoe boxes used for luggage, handbags, and pocketbooks.

A notice of redelivery for a shipment of imported PVC bags was issued by our New York office. The merchandise was not redelivered as directed nor did the importer elect one of the other alternatives offered. Therefore, a claim for liquidated damages was initiated on October 4, 1978. The attorney for the importer submitted a letter denying that his client's merchandise copies the registered and recorded design trademark. The attorney for the trademark owner submitted two letters informing our New York Office that 28 civil suits have been filed against persons or corporations in the U.S. district court in order to prevent the infringement or unauthorized use of the design trademark. A sample PVC shopping bag from the shipment in question bearing the alleged infringing mark and a swatch of material bearing the genuine trademark were submitted to our office for comparison purposes.

Law and analysis.—Section 42 of the act of July 5, 1946 (commonly referred to as the Lanham Act, 60 Stat. 440, 15 U.S.C. 1124), prohibits the importation into the United States of merchandise which shall copy or simulate a registered trademark of any foreign manufacturer or trader who is entitled under the provisions of a treaty, convention, declaration, or agreement between the United States and any foreign country to advantages afforded by law to citizens of the United States in respect to trademarks, provided a copy of such trademark registration is filed with the Secretary of the Treasury and recorded in the manner provided by regulations (19 CFR 133.1–133.7). Section 526(b) of the Tariff Act of 1930, as amended, (19 U.S.C. 1526(b)) provides that any such merchandise bearing a counterfeit mark, within the meaning of section 45 of the Lanham Act (15 U.S.C. 1127), imported in violation of section 42 of the Lanham Act (15 U.S.C. 1124), shall be seized, and, in the absence of written consent of the trademark owner, forfeited for violations of the Customs laws.

The term "counterfeit" is defined in the law (15 U.S.C. 1127) as a spurious mark which is identical with, or substantially indistinguishable from, a registered mark. Since the imported PVC bags bear a design which is not identical with or substantially indistinguishable from the design trademark, the mark is not considered to be counterfeit within the definition cited above, and future shipments would not be subject to the procedures set forth in 19 U.S.C. 1526(b) and section 133.23a of the Customs Regulations (19 CFR 133.23a) for notice to the trademark owner, seizure and forfeiture to the Government, and disposition of forfeited merchandise in accordance with 19 CFR 133.52(a) in the absence of written consent of the trademark owner to an alternative disposition.

Infringement of federally registered marks is governed by the test of whether defendant's use is likely to cause confusion, or to cause mistake, or to deceive. In considering the question of whether or not the marks are confusingly similar, we note that both marks are comprised of two capital letters superimposed one upon the other, surrounded by a fleurs-de-lis pattern. The appearance of the marks are strikingly similar. The only differences noted upon careful scrutiny are that the letters are different and that there are minor differences in the shape of some of the figures that make up the fleurs-de-lis pattern. Under the normal test applicable to unsophisticated buyers of a product at retail, we are of the opinion that there would be a substantial likelihood of confusion.

The design trademark has been in continuous use by Vuitton et Fils S.A. or its predecessors since 1908. Consequently, the Vuitton trademark has become highly distinctive and is strongly associated with the Vuitton business and its reputation for quality products.

It appears to us that the manufacturers and importers of the PVC bags bearing the alleged infringing mark are latecomers in the industry. In a situation such as this, any doubts regarding the likelihood of confusion should be resolved in favor of the prior user of the mark. The theory behind this is that the newcomer's field of selection of a mark is not so limited as to require the adoption of a mark likely to cause confusion. Accordingly, entry of the imported PVC bags bearing the design described above would be prohibited entry into the United States as infringing the registered design trademark.

Holding.—Importations of PVC bags bearing the infringing design (the letters "P" and "C" superimposed one on the other and surrounded by a fleurs-de-lis pattern) should be detained pursuant to section 133.22 of the Customs Regulations (19 CFR 133.22). Articles detained pursuant to 19 CFR 133.22 may be released to the importer if any of the circumstances allowing exemption from trademark restrictions set forth in 19 CFR 133.21(c) are established. Since the importer has not chosen to exercise any of these options during the 30-day period of detention and has not redelivered the merchandise to Customs custody, the claim for liquidated damages under the terms of the entry bond was proper pursuant to 19 CFR 133.46 and 19 CFR 141.113(g). You may furnish a copy of this ruling to all concerned parties.

(C.S.D. 80-98)

Exemptions: Whether Stereo Components and Portable Televisions Are Household Effects Under Item 810.10, TSUS

Date: August 31, 1979
File: BAG-5-02-R:E:E
710052 HS

This ruling concerns whether stereo components and portable televisions are household furnishings or effects within the meaning of item 810.10, Tariff Schedules of the United States.

Issue.—Whether stereo components and portable televisions are household furnishings or effects entitled to free entry under item 810.10, Tariff Schedules of the United States (TSUS).

Facts.—A broker desires clarification on whether portable television sets and stereo components which are used abroad not less than 1 year are entitled to free entry as household furnishings or effects.

Law and analysis.—The Secretary of the Treasury is authorized under 19 U.S.C. 1498(a)(4) to prescribe rules and regulations for the

declaration and entry of household effects used abroad and personal effects, not imported in pursuance of a purchase or agreement for purchase and not intended for sale.

Section 148.52(a), Customs Regulations, prescribes the regulations for furniture and other usual household furnishings and effects actually used abroad for not less than 1 year by a resident or nonresident, and not intended for any other person or for sale, entry free of duty and tax under item 810.10 and schedule 8, part 2, headnote 1, TSUS.

Item 810.10, TSUS, provides that articles such as books, libraries, usual and reasonable furniture, and similar household effects imported by or for the account of any person arriving in the United States from a foreign country may be admitted free of duty if they were actually used abroad by the person or by the person and his family for not less than 1 year, and are not intended for any other person or for sale.

In the past, Customs has ruled that stereo components and portable televisions are not such household furnishings or effects. They have been considered dutiable as electronic equipment under items 684.70–685.59, TSUS.

However, after a review of this ruling we have concluded that a change in the buying habits of the American consumer requires the ruling to be amended. While in the past many Americans may not have owned stereo systems and portable television sets, these appliances are usual household effects found in most American homes today.

Further, we do not believe it is fair to differentiate between a console stereo system or television set and a component stereo system or portable television in granting personal exemptions. In the past, console systems were permitted entry free as furniture while stereo component systems and portable television sets were treated as electronic equipment not permitted free entry. We are now of the opinion that stereo component systems and portable television sets are household effects within the scope of item 810.10, TSUS.

Holding.—Stereo components and portable televisions are considered to be household effects entitled to free entry under item 810.10, Tariff Schedules of the United States upon compliance with section 148.52(a), Customs Regulations, if actually used abroad for not less than 1 year.

(C.S.D. 80-99)

Drawback: Use of Perforated Signatures Under the Uncertified Notice of Exportation Procedure; Section 22.7(c), Customs Regulations

Date: September 7, 1979
File: DRA-1-09-R:CD:D B
210906

Issue.—Whether a perforated signature on a bill of lading is acceptable for certification of export under the uncertified notice of export procedure set out in section 22.7(c), Customs Regulations.

Facts.—Customs field officers have asked for a ruling on the above issue before they accept the perforated signatures.

Law and analysis.—The perforated signatures are considered facsimile signatures. Under applicable statutory law, in the absence of a statute providing otherwise, a signature of almost any type is sufficient for certification or authentication if the person or entity affixing that signature intends to be bound by it. Customs Headquarters so held in a ruling of March 5, 1979 (DRA-1-09-R:CD:D B 210102), disseminated as Legal Determination 79-0153.

The pertinent part of section 22.7(c), Customs Regulations, Uncertified notice of exportation, provides:

> * * * An uncertified notice of exportation shall be supported by documentary evidence of exportation, such as the bill of lading, air waybill, freight waybill, Canadian Customs manifest, cargo manifest, or certified copies thereof, issued by the exporting carrier * * *.

Section 22.7(b)(3), Customs Regulations, is silent on the type of certification required for certified notices of exportation by the District Director or his designee. It would be inequitable to require a higher degree of certification, i.e. original signatures, on drawback papers prepared by claimants, so long as it is understood those claimants intend to be bound by facsimile signatures, if these are used.

Holding.—Perforated and other facsimile signatures on bills of lading and other documents set out in section 22.7(c), Customs Regulations, may be accepted by Customs so long as the parties using those signatures agree to be bound by them.

(C.S.D. 80-100)

Valuation: Cost of Production: Whether Leasehold Costs Allocable to Unused Floor Space Form Part of the Usual General Expenses of Production

Date: September 27, 1979
File: R:CV:V
061400 GE

To: District Director of Customs, El Paso, Tex.
From: Director, Classification and Value Division, Headquarters, Washington, D.C.
Subject: Internal Advice Request No. 91/79.

This is in reply to your request for internal advice concerning the proper appraisement of certain imported automotive wiring harnesses, appraised under cost of production, 19 U.S.C. 1402(f).

Issue.—Whether the cost of rent allocable to presently unutilized floor space at the importer's foreign assembly facility is a usual general expense, 19 U.S.C. 1402(f)(2), which forms part of the dutiable value of the subject harnesses.

Facts.—The importer's assembly facility in Mexico leases space for its operations, including floor space which is, according to the importer, totally unutilized, abuts floor space now used for assembly of wiring harnesses, and is not physically segregated from the plant. Since the facility is, and will be engaged only in the production of wiring harnesses, the presently unutilized space is intended solely for future expansion of the facility's existing operations. In September 1978, the amount of unutilized floor space was 47 percent of the total leased space. This percentage has been reduced by 3 to 6 percent each successive month, so that by February 1979, only 20 percent of the floor space remained unutilized. In submitting its first actual cost submission in April, the assembler discounted the proportionate amount of unused floor space cost for each month from the monthly lease cost. The total discount subtracted from its cost submission was $67,278.

In a memorandum dated June 6, 1979, the Chief, Duty Assessment Branch, New York Seaport, expressed the opinion that the cost for leasehold expenses allocable to unused floor space does not, for Customs purposes, relate to the assembly of the wiring harnesses. On the other hand, it is your opinion that the costs incurred in leasing the unutilized space are usual general expenses under 19 U.S.C. 1402(f)(2) and thus form part of the dutiable value of the subject merchandise.

Law and analysis.—It is the opinion of Headquarters that the leasehold costs allocable to the unutilized floor space do not constitute part

of the usual general expenses of the wiring harness assembly operation. It is not disputed that the proper basis of valuation is cost of production under section 1402(f), title 19 of the United States Code.

In ORR ruling 73–0092, dated April 6, 1973, this office was of the position that costs associated with unutilized floor space would be dutiable unless the amount of space was unusually or disproportionately large as compared to the total available space. On the other hand, these costs would not be dutiable if the unutilized space was reserved for a future operation different from the existing operation. In such a case, the costs would not be part of the usual general expenses of such merchandise.

In a later ruling, ORR ruling 77–0124, dated March 7, 1977, we modified our earlier position. We ruled that costs associated with unutilized floor space, regardless of intended future use, are nondutiable. The reason is that it is too difficult for an importer to establish that the unused floor space is reserved for a different assembly operation, rather than an expansion of the same assembly operation. Only after the floor space is actually used for the same operation will its costs be dutiable.

Your office is of the opinion that, because in this case it would not be difficult to show that the floor space will be used for wiring harness assembly operations, future intended use should be a consideration. However, since the difficulties recognized in ORR ruling 77–0124 generally still exist, and since to distinguish the present situation as a special case would substantially burden future administrative efforts, foster inconsistent rulings, and increase uncertainties for importers, we stand by our prior ruling.

It follows from our decision in 1977 that regardless of the fact that the percentage of unutilized floor space ranged from 47 percent to only 20 percent of the total space, the costs associated with the floor space are not attributable to the cost of producing the wiring harnesses. In essence, that decision requires that unutilized space is to be treated as nondutiable until the space is actually used for the expansion of the same operations.

Your office is also of the opinion that because there is no competing cost object to which to assign leasehold expenses actually incurred, these fixed costs must be assigned to the wiring harness assembly operations. Our prior rulings, however, make clear that there are circumstances where costs will be incurred, will not be assignable to competing cost objects, and are nonetheless not part of dutiable value. One example is where costs are incurred due to temporary circumstances of an extraordinary nature, such as floods, fires, and strikes. Such costs are not included in a cost of production appraisement.

We distinguish the present situation from one where floor space is temporarily idle due to circumstances which are temporary and normally incident to any ongoing business, such as economic downturns. The unused floor space of the assembly facility in the instant case has at no time been associated with the assembly of wiring harnesses. Once the floor area is associated, however, even if temporarily unutilized, its leasehold expenses constitute part of the cost of production.

Holding.—The leasehold costs allocable to the unused floor space are not part of the usual general expenses of producing the automotive wiring harnesses under section 1402(f), title 19 of the United States Code.

Decisions of the United States Customs Court

United States Customs Court

One Federal Plaza
New York, N.Y. 10007

Chief Judge

Edward D. Re

Judges

Paul P. Rao
Morgan Ford
Scovel Richardson
Frederick Landis
James L. Watson
Herbert N. Maletz
Bernard Newman
Nils A. Boe

Senior Judge

Samuel M. Rosenstein

Clerk

Joseph E. Lombardi

Customs Decision

(C.D. 4860)

LEE ENTERPRISES, INC., PLAINTIFF, *v.* UNITED STATES, DEFENDANT

Court No. 77-2-00176

Unfinished Printing Plates

"MATERIAL" VS. "UNFINISHED" ARTICLE—DEDICATION TO USE TEST

"The general rule is that a thing may be classed as an unfinished article if in its imported condition it has been so far advanced beyond the stage of materials as to be dedicated to and commercially fit for use as that article and is incapable of being made into more than one article or class or articles." *Avins Industrial Products Co.* v. *United States*, 72 Cust. Ct. 43, C.D. 4503, 376 F. Supp. 879, *reh. denied*, 72 Cust. Ct. 147, C.D. 4522 (1974), *aff'd*, 62 CCPA 83, C.A.D. 1150, 515 F.2d 782 (1975).

SAME—IDENTITY OF INDIVIDUAL ARTICLE FIXED WITH CERTAINTY

Imported merchandise will be regarded as a "material" rather than as an "unfinished" article where the identity of the individual article is not fixed with certainty. *Bendix Mouldings, Inc.* v. *United States*, 73 Cust. Ct. 204, C.D. 4576, 388 F. Supp. 1193 (1974); *Sandvik Steel, Inc.* v. *United States*, 66 Cust. Ct. 12, C.D. 4161, 321 F. Supp. 1031 (1971).

SAME—PRINTING PLATES—"UNFINISHED"

The record in this case establishes that the "NAPP" photopolymer plates were dedicated to use as printing plates and that the identity of the individual articles was "fixed with certainty."

After trimming, punching, and bending, the imported plates were usable for no more than a single letter press printing plate and were not bulk material from which an unknown number of printing plates were made. "(T)he involved articles have been so far advanced that each has attained an individuality which identifies it in its unfinished state as the article it will be when finished." *Geo. S. Bush & Co., Inc.* v. *United States*, 34 CCPA 17, 20, C.A.D. 338 (1946). Hence, the NAPP plates are unfinished articles rather than materials.

UNFINISHED PARTS OF PRINTING MACHINERY

"NAPP" photopolymer plates designed and dedicated for use in rotary letter presses for printing newspapers, which after importation were required to be trimmed to size, punched and crimped for mounting them on saddles, were not precluded from the status of unfinished parts of printing machinery by virtue of the fact that the plates were trimmed to various sizes depending upon the size of the newspaper to be printed. Therefore, the merchandise is properly dutiable as parts of printing machinery under item 668.50, TSUS, as claimed by plaintiff, rather than as articles of aluminum under item 657.40, TSUS, as classified by Customs.

[Judgment for plaintiff.]

(Decided June 23, 1980)

Glad, Tuttle & White, Esqs. (*Robert Glenn White*, Esq., of counsel) for the plaintiff.

Alice Daniel, Assistant Attorney General, *Joseph I. Liebman*, Attorney in Charge, Field Office for Customs Litigation, *Susan Handler-Menahem*, trial attorney, for the defendant.

NEWMAN, JUDGE:

INTRODUCTION

Plaintiff contests the classification by Customs at Los Angeles of certain NAPP photopolymer plates imported from Japan during the period of 1972–74. The merchandise was classified by the District Director under the provisions in item 657.40, TSUS, as modified by T.D. 68–9, for articles of aluminum, not coated or plated with precious metal, and assessed duty at the rate of 9.5 per centum ad valorem.

Plaintiff claims that the imports are unfinished printing plates, and are properly dutiable under the provision in item 668.50, TSUS, for "Other parts of printing machinery" at the rate of 6 per centum ad valorem, the rate applicable to printing presses under item 668.20, TSUS, as modified by T.D. 68-9.

I have concluded that plaintiff's claim should be sustained.

STATUTES INVOLVED

Tariff Schedules of the United States, 19 U.S.C. § 1202:

Classified under:

Schedule 6, part 3, subpart G:

657.40	Articles of aluminum, not coated or plated with precious metal	9.5% ad val.

Claimed under:

Schedule 6, part 4, subpart D:

Printing machinery:

*	*	*
668.20	Other, including printing presses, offset duplicating machines, and stencil copy machines	6% ad val.
*	*	*
668.38	Steel plates, stereotype plates, electrotype plates, half-tone plates, * * * and plates of other materials, engraved or otherwise prepared for printing	* * *
668.50	Other parts of printing machinery	The rate for the articles of which they are parts.

General headnotes and rules of interpretation:

10. *General interpretative rules.*—For the purposes of these schedules—

* * * * * * *

(h) unless the context requires otherwise, a tariff description for an article covers such article, whether assembled or not assembled, and whether finished or not finished;

(i)-(j) a provision for "parts" of an article covers a product solely or chiefly used as a part of such article, but does not prevail over a specific provision for such part.

THE RECORD

Plaintiff presented the testimony of three witnesses: Gary L. Benshoof, director of product programs for NAPP Systems (U.S.A.), Inc. (an affiliate of Lee Enterprises, Inc.), and a former employee of plaintiff; Tom Williams, publisher of the Montana Standard, a Lee Enterprises newspaper; and James Michael Zehner, commodity team

leader, U.S. Customs Service. Defendant called no witnesses. Both parties submitted various exhibits, and the official papers were received in evidence, without marking.

The pertinent facts are:

The merchandise comprises rectangular aluminum plates measuring 16 by 24 inches coated with a polyvinyl alcohol resin (photopolymer coating) which is sensitive to ultraviolet light (R. 14–15, 20). The NAPP plates are used for printing newspapers on rotary letter presses by various publishers in the United States, and have no use other than for printing (R. 18, 20–21, 72, 76). Letter press printing is a process in which an image is raised in relief and printing is performed from the raised top surface (R. 8).

In their imported condition, the photopolymer plates are not usable for printing, but require preparation. The plates are prepared for use in printing by first exposing a newspaper page negative onto their light-sensitive surface with an ultraviolet light. This exposure to light causes chemical changes (polymerization) that harden the photopolymer coating in those areas where the light is transmitted through the negative. After the exposure process, water is sprayed onto the plates washing away the photopolymer coating in the areas that were not exposed to the ultraviolet light, leaving a relief image on the plates (R. 21, 23–24, 26).

After the relief image has been placed on the plates, they must be prepared for mounting on the letterpresses. In short, such preparation involves trimming to size, punching holes, and bending the ends of the plates (R. 28, 48).

The purpose of trimming the plates is to reduce their size to the size of the page of printed image used by the particular newspaper. Newspapers are not printed in any standard or uniform sizes, and consequently the precise amount of trimming required for a particular plate depends upon the specific size of the newspaper to be printed with that plate (R. 61, 69–70). There are no lines of demarcation on the plates for trimming (R. 47).

After trimming, holes are punched in the ends of the plates, which holes serve the purpose of holding the plates to the saddle of the press cylinder by pins (R. 32, 40, 58). The saddle is a semicyclindrial device attached to the cylinder of the rotary letter press that acts as an adapter for photopolymer plates (R. 34–36).

After hole-punching, the ends of the plates are crimped or bent to a 90-degree angle (R. 28, 47).

It takes from 7 to 10 minutes to expose the imported plates and prepare them for mounting to the saddle of the press (R. 41, 75–76).

THE ISSUE

The sole question presented is whether the trimming, hole-punching and crimping operations to which the imported plates were subjected in order to mount them on a letterpress constituted the processing of an unfinished printing plate into a finished plate, as contended by plaintiff; or whether such processing constituted the substantial manufacture of a raw material into a finished article, as maintained by defendant.[1]

OPINION

Interpretative rule 10(h) of the Tariff Schedules of the United States provides in pertinent part that "unless the context requires otherwise, a tariff description for an article covers such article, * * * whether finished or not finished". Hence, by virtue of rule 10(h), the provision for parts of printing machinery in item 668.50, TSUS, covers unfinished parts of such machinery. While plaintiff claims that the imports are unfinished printing plates (and thus, unfinished parts of printing machinery), defendant insists that the merchandise is in material form (brief, at 6).

In *Avins Industrial Products Co.* v. *United States*, 72 Cust. Ct. 43, C.D. 4503, 376 F. Supp. 879, *reh. denied*, 72 Cust. Ct. 147, C.D. 4522 (1974), *aff'd*, 62 CCPA 83, C.A.D. 1150, 515 F.2d 782 (1975), Judge Rao articulated the dedication to use test that is applicable in determining whether particular merchandise is a material or an unfinished article or part (72 Cust. Ct. at 49):

> The general rule is that a thing may be classed an as unfinished article if in its imported condition it has been so far advanced beyond the stage of materials as to be dedicated to and commerically fit for use as that article and is incapable of being made into more than one article or class of articles. *United States* v. *Schenkers, Inc., supra*; *American Import Co.* v. *United States*, 26 CCPA 72, 74, T.D. 49612 (1938); *F. W. Myers & Co., Inc.* v. *United States*, 57 CCPA 87, 90, C.A.D. 982, 425 F. 2d 781 (1970); *Finn Bros. Inc.* v. *United States*, 59 CCPA 72, 75–76, C.A.D. 1042, 454 F. 2d 1404 (1972).

And continuing, the Court observed (72 Cust. Ct. at 50):

> Whether particular merchandise is a material or an unfinished article or part is a question which has been before the courts on many occasions, with differing results depending upon the facts and the statutory language in each case. *United States* (*American Sponge & Chamois Co., Inc., Party in Interest*) v. *Nylonge Corporation*, 48 CCPA 55, 61, C.A.D. 764 (1960). "The exact point

[1] Defendant does not urge that the exposure and washing process used to place a relief image on the photopolymer plates constituted the imports materials rather than unfinished plates. Further, defendant does not dispute that if the imports are unfinished printing plates, they are classifiable as parts of printing machinery under item 668.50, TSUS.

> in the processing of raw material at which it becomes a partly finished article or manufacture is a matter which must be determined on the basis of the circumstances of the particular case involved." *J. B. Henriques, Inc.* v. *United States*, 46 CCPA 54, 56, C.A.D. 695 (1958).

It is also well settled that imported merchandise will be regarded as a material rather than as an unfinished article or part where the identity of the individual article is not fixed with certainty. See *Bendix Mouldings, Inc.* v. *United States*, 73 Cust. Ct. 204, C.D. 4576, 388 F. Supp. 1193 (1974), *Sandvik Steel, Inc.* v. *United States*, 66 Cust. Ct. 12, C.D. 4161, 321 F. Supp. 1031 (1971), and the cases cited and discussed therein. As stated by Judge Watson in *Bendix Mouldings* (73 Cust. Ct. at 205):

> The general problem of when a material becomes an article is one which has long been the subject of judicial consideration. I believe certain useful guidelines emerge from a study of past case law. With respect to importations which are in a form dedicated to a certain use but from which the claimed individual articles have not yet fully emerged, to my mind the underlying question is whether the identity of an actual individual article can somehow be discerned.

Here, the record abundantly establishes that the NAPP plates in issue were dedicated to use as printing plates, and that the identity of the individual article was fixed with certainty. Thus, each individual imported NAPP plate was dedicated to use for no more than a single letter press printing plate and was not bulk material from which an unknown number of printing plates were made. This significant fact distinguishes the merchandise in the present case from that in the following line of cases holding the merchandise therein to be a material rather than unfinished articles or parts. *The Harding Co. et al.* v. *United States*, 23 CCPA 250, T.D. 48109 (1936) (brake linings in rolls); *American Import Co.* v. *United States*, 26 CCPA 72, T.D. 49612 (1938) (silk fishing-leader gut in coils); *F. H. Paul & Stein Bros., Inc.* v. *United States*, 44 Cust. Ct. 130, C.D. 2166 (1960) (reels of aluminum foil); *Sandvik Steel, Inc., supra* (shoe die knife steel in coils and Dieflex cutting rules in lengths); *Naftone, Inc.* v. *United States*, 67 Cust. Ct. 341, C.D. 4294 (1971) (rolls of plastic film); *Bendix Mouldings, Inc., supra* (wood moldings in 9-foot lengths dedicated for use in the manufacture of picture or mirror frames).

As may be noted, the merchandise in the above-cited cases was imported in rolls, coils, reels, or lengths rather than individual pieces which required trimming, as here. Notwithstanding the trimming required, the imported articles were still identifiable as individual printing plates in an unfinished condition. They were never cut in half (R. 60) or divided into several printing plates. In this respect,

the present merchandise is somewhat analogous to the so-called natural silk gut or "tegusu" in *Geo. S. Bush & Co., Inc.* v. *United States*, 34 CCPA 17, C.A.D. 338 (1946).

In *Bush*, the natural silk gut was imported in individual pieces of from 5 to 7 feet in length. Before these pieces could be used as leaders for fishing lines, a waste portion thereof (clearly distinguishable from the usable portion of the articles) was required to be cut off. The articles from which the waste portions had been removed and which had been soaked in water and loops tied in each of the ends for the purpose of attaching a fishing line to one end and a hook to the other, were used without cutting to length as finished leaders. In finding that the individual pieces of natural silk gut were unfinished leaders rather than material, the Court of Customs and Patent Appeals commented (34 CCPA at 20):

> * * * We are of opinion, therefore, that each piece of the merchandise in question was dedicated to the making of a particular length of leader, which was not true in the *American Import Co.* case, *supra*, and that * * * the involved articles have been so far advanced that each has attained an individuality which identifies it in its unfinished state as the article it will be when finished. * * *

It is true, as pointed out by defendant, the imports were not dedicated to any particular size printing plates. Nevertheless, I cannot agree with defendant that such fact precludes the imports from the status of unfinished articles. The overriding fact remains that each NAPP plate, after processing, was dedicated to use as a single printing plate and "the involved articles have been so far advanced that each has attained an individuality which identifies it in its unfinished state as the article it will be when finished". *Bush, supra*, 34 CCPA at 20. The trimming, hole-punching and bending operations, which were required after importation, were not substantial manufacturing processes. As previously mentioned, it requires a mere 7 to 10 minutes to expose a page negative to the imported plates and prepare the plates for mounting on a particular letterpress by trimming, punching, and bending.

At the trial, defendant introduced in evidence (exhibit A) a copy of a letter dated June 6, 1972, written by W. A. Walsmith (plaintiff's then production manager) to the District Director of Customs at Chicago, Ill. Walsmith's letter states, inter alia, that the NAPP plates were imported in material form. However, it is important to note that Walsmith's letter was sent in response to a written questionnaire (exhibit B) by the District Director at Chicago as to whether the NAPP plates are "a stock size ready to fit a specific type printing machine" or "are * * * imported in material form so that they must

be cut to fit the press". It is evident from Customs' questionnaire and the response thereto that, in stating that NAPP plates were imported in material form, Walsmith simply adopted one of the two alternatives suggested by the District Director.[2] Significantly, the District Director did not suggest or inquire into the possiblity that NAPP plates were imported as unfinished articles. While Walsmith's letter admits that the NAPP plates required trimming (a fact not disputed by plaintiff), Walsmith's characterization of the NAPP plates as a material is not conclusive as to the legal issue in this case.

Plaintiff has directed attention to a recent decision by Judge Watson in *The Kinney Co.* v. *United States*, 83 Cust. Ct. 137, C.D. 4831 (1979). There, the issue was whether certain flat metal pieces subjected to processing after importation were classifiable as parts of jewelry or as articles of copper. The dispute revolved about whether the merchandise was unfinished or a material. In determining that the imports were unfinished parts, the court did not discuss the additional processing required after importation to complete the articles, and the linchpin of the court's decision is found in the following observation (83 Cust. Ct. at 139):

> Plaintiff's argument that the importations are not sufficiently advanced to be parts is ingenuous. They are clearly much too developed in form and in detail and too close to the final product to be considered mere material. * * *

By the same token, here the NAPP plates are far too advanced toward the ultimate product to be considered as mere material, and consequently I find they are unfinished articles.

Finally, we reach the question of whether the unfinished printing plates are parts of printing machinery, as claimed by plaintiff.

The record shows that the imported plates were designed for use in rotary letterpresses. There is no dispute that letterpresses are classifiable under item 668.20, TSUS (paragraph 10, complaint and answer), and that letterpresses cannot function for the purposes for which they were designed and intended without the use of printing plates (paragraph 15, complaint and answer). Additionally, plaintiff's evidence establishes without contravention that the imports were dedicated to use as printing plates for printing machinery. According to the Summaries of Trade and Tariff Information (1969), schedule 6, volume 8, p. 277:

> The Bureau of Customs has also held that item 668.50 covers such articles as printing plates that have not been engraved or otherwise prepared for printing * * *

[2] As to the other alternative suggested by the District Director, the NAPP plates clearly were not imported in stock sizes ready to fit a specific type printing machine.

Plaintiff also cites *Crabtree Vickers, Inc.* v. *United States*, 79 Cust. Ct. 13, C.D. 4707, *reh. denied*, 79 Cust. Ct. 60, C.D. 4714 (1977), which involved the proper tariff classification of certain aluminum plates coated with a photosensitive plastic used in printing machinery. While interestingly, the plates in *Crabtree* were classified by Customs as parts of printing machinery under item 668.50, TSUS (plaintiff's claimed provision herein), the present issue was not before the court in that case.

In conclusion, I find that the NAPP plates are parts of printing machinery, and fall within the purview of item 668.50, TSUS, as claimed by plaintiff. Therefore, the merchandise is properly dutiable at the rate of 6 per centum ad valorem, as provided for in item 668.20, TSUS, as modified.

Judgment will be entered accordingly.

Decisions of the United States Customs Court

Abstracts

Abstracted Reappraisement Decisions

DEPARTMENT OF THE TREASURY, *July 1, 1980.*

The following abstracts of decisions of the United States Customs Court at New York are published for the information and guidance of officers of the customs and others concerned. Although the decisions are not of sufficient general interest to print in full, the summary herein given will be of assistance to Customs officials in easily locating cases and tracing important facts.

ROBERT E. CHASEN,
Commissioner of Customs.

DECISION NUMBER	JUDGE & DATE OF DECISION	PLAINTIFF	COURT NO.	BASIS OF VALUATION	HELD VALUE	BASIS	PORT OF ENTRY AND MERCHANDISE
R80/204	Maletz, J. June 26, 1980	American Thermo-Ware Co.	R60/193, etc.	Export value	F.o.b. unit invoice prices plus 20% of difference between f.o.b. unit invoice prices and appraised values	Agreed statement of facts	New York Binoculars

R80/205	Maletz, J. June 26, 1980	Brother International Corp.	R64/946	Export value	F.o.b. unit invoice prices plus 20% of difference between f.o.b. unit invoice prices and appraised values	Agreed statement of facts	New Orleans Sewing machine head
R80/206	Maletz, J. June 26, 1980	Brother International Corp.	R65/9494, etc.	Export value	Appraised unit values less 7.5%, net packed	Agreed statement of facts	Chicago Sewing machines and consoles
R80/207	Maletz, J. June 26, 1980	Bruce Duncan Co., a/c Belvedere Distributing Co.	R63/523, etc.	Export value	F.o.b. unit invoice prices plus 20% of difference between f.o.b. unit invoice prices and appraised values	Agreed statement of facts	Los Angeles Sewing machines
R80/208	Maletz, J. June 26, 1980	Bruce Duncan Co., Inc., a/c Ezra Mallem & Son	R61/2265, etc.	Export value	Appraised unit values less 7.5%, net packed	Agreed statement of facts	Los Angeles Rugs
R80/209	Maletz, J. June 26, 1980	Hurricane Import Co.	R65/1174	Export value	F.o.b. unit invoice prices plus 20% of difference between f.o.b. unit invoice prices and appraised values	Agreed statement of facts	Seattle Floor coverings
R80/210	Maletz, J. June 26, 1980	Hurricane Import Co.	R64/13846	Export value	F.o.b. unit invoice prices plus 20% of difference between f.o.b. unit invoice prices and appraised values	Agreed statement of facts	San Francisco Rugs
R80/211	Maletz, J. June 26, 1980	New York Merchandise Co., Inc.	R60/15794	Export value	F.o.b. unit invoice prices plus 20% of difference between f.o.b. unit invoice prices and appraised values	Agreed statement of facts	Honolulu Rugs

DECISION NUMBER	JUDGE & DATE OF DECISION	PLAINTIFF	COURT NO.	BASIS OF VALUATION	HELD VALUE	BASIS	PORT OF ENTRY AND MERCHANDISE
R80/212	Maletz, J. June 26, 1980	New York Merchandise Co., Inc.	R61/6777, etc.	Export value	F.o.b. unit invoice prices plus 20% of difference between f.o.b. unit invoice prices and appraised values	Agreed statement of facts	Los Angeles Rugs
R80/213	Maletz, J. June 26, 1980	Selsi Co., Inc.	R61/9986	Export value	F.o.b. unit invoice prices plus 20% of difference between f.o.b. unit invoice prices and appraised values (binoculars) Unit value of U.S. $8.98, net packed (radios and cases)	Agreed statement of facts	New York Binoculars; radios and cases
R80/214	Maletz, J. June 26, 1980	Toyo Rug Co., Ltd.	R60/18231, etc.	Export value	F.o.b. unit invoice prices plus 20% of difference between f.o.b. unit invoice prices and appraised values	Agreed statement of facts	Philadelphia Rugs
R80/215	Maletz, J. June 26, 1980	Toyo Rug Co., Ltd.	R61/7233	Export value	F.o.b. unit invoice prices plus 20% of difference between f.o.b. unit invoice prices and appraised values	Agreed statement of facts	Boston Rugs
R80/216	Maletz, J. June 26, 1980	John L. Westland & Son, Inc., a/c Couri Murad & Co.	R58/28660	Export value	Various appraised unit values less 7.5%, net packed	Agreed statement of facts	Los Angeles Floor coverings

R80/217	Maletz, J. June 26, 1980	YKK Zipper Co. Inc. (Cal) et al.	75-2-00388, etc.	United States values	Equal to invoiced unit prices, net packed	Agreed statement of facts	Los Angeles Zippers and/or zipper parts classified under item 745.70, 745.72 or 745.74

Judgments of the U.S. Customs Court in Appealed Cases

JUNE 26, 1980

Appeal 79-32.—United States *v.* Texas Instruments Incorporated.—VISIBLE LIGHT EMITTING DIODES—WATCH AND CLOCK DIALS—ELECTRICAL INDICATOR PANELS OR VISUAL SIGNALLING APPARATUS—TSUS.—C.D. 4811 affirmed April 17, 1980 (C.A.D. 1243).

Appeal 79-33.—United States *v.* Texas Instruments Incorporated.—MONOLITHIC INTEGRATED CIRCUIT CHIPS—COMPONENTS OF SOLID-STATE ELECTRONIC WATCHES—ASSEMBLIES OR SUBASSEMBLIES FOR WATCH MOVEMENTS (OR CLOCK MOVEMENTS)—TRANSISTORS AND OTHER RELATED ELECTRONIC CRYSTAL COMPONENTS—TSUS.—C.D. 4810 affirmed April 17, 1980 (C.A.D. 1244).

Appeal to U.S. Court of Customs and Patent Appeals

Appeal 80–32.—United States *v.* David E. Porter.—SEATS FOR RAPID TRANSIT CARS—FURNITURE—PARTS OF RAIL VEHICLES OR CARS—TSUS—SUMMARY JUDGMENT. Appeal from C.D. 4808, as amended by C.D. 4857.

In this case transverse rapid-transit seats used exclusively in San Francisco Bay Area Rapid Transit (BART) rail vehicles were assessed at 10 percent ad valorem under item 727.55, Tariff Schedules of the United States, as other furniture. Plaintiff-appellee claimed that the merchandise was properly dutiable at 5.5 percent under item 690.40 as parts of rail vehicles or cars. The Customs Court held that the seats should be classified under item 690.40, supra, as claimed. Plaintiff's motion for summary judgment was granted and defendant's cross-motion for summary judgment was denied on June 22, 1979 (C.D. 4808). Plaintiff moved to amend the judgment entered on June 22, 1979, to include merchandise (window and longitudinal seats) inadvertently excluded by plaintiff in its motion for summary judgment. Defendant-appellant opposed the motion and requested that it be dismissed for lack of jurisdiction. Plaintiff's motion to amend the judgment was dismissed. Cross-appeals 79–30 and 80–1 were taken from C.D. 4808, and the Court of Customs and Patent Appeals remanded the matter to the Customs Court. The Customs Court in C.D. 4857 amended the judgment in C.D. 4808 to include window and longitudinal seats as properly dutiable under item 690.40, supra.

It is claimed that the Customs Court erred in granting summary judgment to plaintiff and in amending said judgment to include longitudinal and window seats, and in not entering judgment for defendant dismissing the action, based upon plaintiff's failure to meet its statutory burden as provided in 28 U.S.C. 2635; in not finding that the merchandise was classifiable under item 727.55, supra, as other furniture; in finding and holding that the merchandise is properly classifiable under item 690.40, supra; in finding and holding that the merchandise is most specifically described under item 690.40; in finding that the furniture provision is a residual provision; in finding that there was no specific congressional intent to include the subject merchandise within the furniture headnote.

International Trade Commission Notices

Investigations by the U.S. International Trade Commission

DEPARTMENT OF THE TREASURY

The appended notices relating to investigations by the U.S. International Trade Commission are published for the information of Customs officers and others concerned.

R. E. CHASEN,
Commissioner of Customs.

(19 CFR 207.40)

Notice of Request for Public Comment on Termination of Countervailing Duty Investigation Concerning Certain Steel Products from Italy

AGENCY: U.S. International Trade Commission.

ACTION: Request for comments on proposed termination of countervailing duty investigations under section 704(a) of the Tariff Act of 1930.

EFFECTIVE DATE: June 27, 1980.

FOR FURTHER INFORMATION CONTACT: Mr. Dan Leahy, Office of Investigations, telephone 202-523-1369.

SUPPLEMENTARY INFORMATION: The Trade Agreements Act of 1979, subsection 104(b)(1), requires the Commission in the case of a countervailing duty order issued under section 303 of the Tariff Act of 1930, upon the request of a government or group of exporters of merchandise covered by the order to conduct an investigation to determine whether an industry in the United States would be materially injured, threatened with material injury or that the establishment of such industry would be materially retarded if the order were to be revoked. On March 27, 1980, the Commission received a request from the Societa Anonima Elettrificazione S.p.a. for the review of the following countervailing duty orders:

Treasury decision establishing countervailing duty

Commodity:	T.D. No.
Galvanized fabricated structural steel units for the erection of electrical transmission towers	67–102
Certain steel products: Fabricated structural steel units for the erection of electrical transmission towers, not galvanized	69–113

The Commission has also been notified by letter that United States Steel, the original petitioner in these countervailing duty orders, wishes to withdraw its petition in T.D. 69–113 as to all of the nine product groups covered by that order pursuant to section 704(a) of the Tariff Act of 1930. The nine product groups are:

Commodity:

1. Steel pipes for penstocks, even armored, of the type used for hydroelectric installations.
2. Cables, ropes, plaits and such in iron or steel wire, with or without core of other materials, excluding those insulated for electricity; except as stated below: Galvanized steel wire rope, and stainless steel aircraft cable.
3. Staples in strip form.
4. Nails of iron or steel.
5. Bolts and nuts of iron or steel except as noted below: Galvanized nuts.
6. Rivets of iron or steel.
7. Forged steel grinding balls.
8. Wheels and axles of vehicles for railroads.
9. Iron and steel constructions and their parts, such as pieces for bridges, steel structural works, gates, frameworks, etc., not galvanized.

The legislative history of section 704(a) indicates that the Commission should solicit public comment prior to termination and approve the termination only if it is in the public interest. In the instant case, if the Commission terminated its investigation as to the nine product groups under T.D. 69–113 listed above, the Commission would then proceed to institute investigations on all products covered by T.D. 67–102 pursuant to section 104(b)(1) to be completed within 3 years after institution.

In light of the Commission's duty to consider the public interest, the Commission requests written comments from persons concerning the proposed termination as to the nine product groups previously listed covered by T.D. 69–113. These written comments must be filed

with the Secretary of the Commission no later than 30 days after publication of this notice in the Federal Register.

By order of the Commission.

Issued: June 30, 1980.

KENNETH R. MASON,
Secretary.

(TA-201-44)

CERTAIN MOTOR VEHICLES AND CERTAIN CHASSIS AND BODIES THEREFOR

Notice of Investigation and Hearings

AGENCY: U.S. International Trade Commission.

ACTION: On the basis of a petition properly filed on June 12, 1980, and on the Commission's own motion, the Commission on June 30, 1980, instituted investigation No. TA-201-44 under section 201(b)(1) of the Trade Act of 1974 (19 U.S.C. 2251(b)(1)) to determine whether automobile trucks, except automobile truck tractors and truck trailers imported together; on-the-highway passenger automobiles; and bodies (including cabs) and chassis for automobile trucks except truck tractors; provided for in items 692.02 and 692.03; 692.10 and 692.11; and 692.20 and 692.21; of the Tariff Schedules of the United States, are being imported into the United States in such increased quantities as to be a substantial cause of serious injury, or the threat thereof, to the domestic industry producing an article like or directly competitive with the imported article.

EFFECTIVE DATE: June 12, 1980.

SPECIAL PROCEDURE AND PUBLIC HEARINGS: In view of the complexity of the subject matter and the large volume of trade, the Commission has divided the 6-month investigative period into two segments of 4½ months and 1½ months, respectively.

During the first segment of the investigation, the Commission will consider the question of serious injury to the domestic industry under section 201(b)(1). At the close of this 4½-month period, the Commission will make its determination under section 201(b)(1). A public hearing concerning the question of injury will be held beginning at 10 a.m., e.d.t., Wednesday, October 8, 1980, in the hearing room of the U.S. International Trade Commission Building, 701 E Street NW., Washington, D.C. 20436. A prehearing conference for the purpose of establishing time limitations for participants in this hearing will be held at 10 a.m., e.d.t. on Tuesday, September 16, 1980, in room 117

(the Sunshine Room) of the International Trade Commission Building in Washington. All persons wishing to appear at the hearing should so notify the Secretary to the Commission, in writing, no later than the close of business Monday, September 15, 1980.

To facilitate the hearing process, it is requested that persons wishing to appear at the hearing submit prehearing briefs enumerating and discussing the issues which they wish to raise at the hearing. Nineteen copies of such prehearing briefs should be submitted to the Secretary to the Commission no later than the close of business Wednesday, October 1, 1980. Copies of any prehearing briefs submitted will be made available for public inspection in the Office of the Secretary. While submission of prehearing briefs does not prohibit submission of prepared statements in accordance with section 201.12(d) of the Commission's Rules of Practice and Procedure (19 CFR 201.12(d)), it would be unnecessary to submit such a statement if a prehearing brief is submitted instead. Therefore, for the purpose of this proceeding, the Commission has waived the requirements of rule section 201.12(d). Any prepared statements submitted will be made a part of the transcript. Oral presentations should, to the extent possible, be limited to issues raised in the prehearing briefs. Posthearing briefs should be filed with the Secretary no later than the close of business October 17, 1980.

The second segment of the investigation, if necessary, will be concerned with the question of import relief to be recommended to the President under section 201(d)(1). (There will be no second segment if the Commissioners' determination under section 201(b)(1) is in the negative, since there will be no basis for recommending relief.) If there is a second segment, the Commission will hold a public hearing with respect to the question of relief beginning at 10 a.m., e.s.t., Monday, November 24, 1980, in the hearing room of the International Trade Commission Building. All persons wishing to appear at this hearing should so notify the Secretary to the Commission, in writing, no later than the close of business Thursday, November 13, 1980. A prehearing conference for the purpose of establishing time limitations for participants in this hearing will be held at 10 a.m., e.s.t., Friday, November 14, 1980, in room 117 (the Sunshine Room) of the International Trade Commission Building.

To facilitate this second hearing, it is requested that persons wishing to appear at the hearing submit prehearing briefs in accord with the procedures outlined above not later than the close of business Thursday, November 20, 1980. Posthearing briefs are not requested.

Persons not represented by counsel or public officials who have relevant matter to present may give testimony without regard to the suggested prehearing procedures outlined above.

In brief, the calendar of pertinent dates is as follows—

Injury phase

Staff report available—September 10
Notice of hearing appearance due—September 15
Prehearing conference—September 16
Prehearing briefs—October 1
Hearing—October 8
Posthearing briefs—October 17

Remedy phase (if necessary)

Notice of hearing appearance due—November 13
Prehearing conference—November 14
Prehearing briefs—November 20
Hearing—November 24

COMMISSION DATA AVAILABLE: The Commission will make available to requesting interested parties by September 10, 1980, a nonconfidential version of its staff-prepared prehearing report. It is hoped that data in this report will serve as a common statistical base for presentations at the hearings.

OTHER WRITTEN SUBMISSIONS: Other written submissions, except for posthearing briefs, should be filed with the Secretary to the Commission prior to the public hearing concerning the subject matter of the submission. Commercial financial data which is confidential should be clearly marked "Confidential business information" and should be submitted in accord with the requirements of section 201.6 of the Commission's Rules of Practice and Procedure (19 CFR 201.6). Submissions should also conform to the general requirements of section 201.8 of the Commission's rules (19 CFR 201.8).

FOR FURTHER INFORMATION CONTACT: Mr. Larry Reavis, Investigator, 202-523-0296, or Mr. William Gearhart, advisory attorney, 202-523-0487.

INSPECTION OF PETITION. The petition filed in this case is available for public inspection at the Office of the Secretary, U.S. International Trade Commission, and at the New York City Office of the U.S. International Trade Commission located at 6 World Trade Center.

SUPPLEMENTARY INFORMATION: The petition in the matter was filed by the International Union, United Automobile, Aerospace & Agricultural Implement Workers of America (UAW).

Section 201(d)(2) requires that the Commission transmit its report to the President not later than 6 months after the petition is filed, in this case by December 12, 1980.

By order of the Commission.

Issued: July 1, 1980.

KENNETH R. MASON,
Secretary.

In the Matter of CERTAIN COIN-OPERATED AUDIO VISUAL GAMES AND COMPONENTS THEREOF	Investigation No. 337-TA-87

Order

Pursuant to my authority as Chief Administrative Law Judge of this Commission, I hereby designate Administrative Law Judge Janet D. Saxon as presiding officer in this investigation.

The Secretary shall serve a copy of this order upon all parties of record and shall publish it in the Federal Register.

Issued: June 30, 1980.

DONALD K. DUVALL,
Chief Administrative Law Judge.

In the Matter of CERTAIN SHELL BRIM HATS	Investigation No. 337-TA-86

Order

Pursuant to my authority as Chief Administrative Law Judge of this Commission, I hereby designate Administrative Law Judge Donald K. Duvall as presiding officer in this investigation.

The Secretary shall serve a copy of this order upon all parties of record and shall publish it in the Federal Register.

Issued: June 30, 1980.

DONALD K. DUVALL,
Chief Administrative Law Judge.

Index

U.S. Customs Service

Treasury decisions: T.D. No.

Instruments of international traffic 80–185

Manmade fiber textile products—restriction on entry 80–183

Recent statutory changes 80–184

Customs Service decisions: C.S.D. No.

Administrative exemptions: Applicability of 19 U.S.C. 1321(a)(1) to informal entries and baggage declarations 80–86

Brokers: Power of attorney; appointment of subagent 80–85

Carrier control:

Use of foreign-built vessel as classroom in U.S. territorial waters 80–78

Transportation of fish-processing supplies between a U.S. port and a point within U.S. territorial waters 80–83

Exemption from special tonnage tax and light money: Netherlands Antilles 80–95

Use of foreign-flag tugs and submersible barges to tow or transport foreign-flag mobile drilling rig between coastwise points 80–96

Classification: Baseball caps 80–90

Country of origin: Frozen orange juice concentrate reconstituted in Canada from Brazilian or American concentrate 80–88

Conditionally free merchandise: Whether emergency war material must be under contract at the time of entry or withdrawal 80–76

Drawback: Use of perforated signatures under the uncertified notice of exportation procedure; section 22.7(c), Customs Regulations 80–99

Duty assessment: Dutiability of merchandise transferred from a foreign trade zone to an offshore installation on Outer Continental Shelf 80–93

Entries: Commercial invoice required for merchandise subject to free or specific rate of duty 80–92

Exemptions: Whether stereo components and portable televisions are household effects under item 810.10, TSUS 80–98

Generalized system of preferences: Substantial transformation; electroplating 80–91

In-bond entries: Steel ingots entered temporarily free of duty under bond for processing under item 864.05, TSUS; abandonment of valuable waste 80–80

In-bond entries: Diamonds entered temporarily, free of duty under bond for evaluation and, if suitable, for cutting; item 864.05, TSUS 80–81

In-bond: Importer's liability when in-bond merchandise is not properly exported 80–94

Instruments of international traffic: Containers, end covers, and skids 80–79

Customs Service decisions—Continued C.S.D. No.
Personal exemptions: Tools of trade 80–84
Prohibited and restricted importations:
Trademark infringement: Watches; substantial likelihood of confusion 80–77
Trademark infringement; conflict between marks registered with U.S. Patent and Trademark Office 80–89
Trademark infringement: Plastic bags with mark substantially likely to cause confusion 80–97
Valuation: Cost of production: Whether leasehold costs allocable to unused floor space form part of the usual general expenses of production 80–100
Vessels: Whether a self-propelled drilling structure is a vessel 80–82
Warehouse: Lease of space in class 2 private bonded warehouse 80–87

Customs Court

Appeal to U.S. Court of Customs and Patent Appeals (p. —); Appeal 80–32—Seats for rapid transit cars; furniture; parts of rail vehicles or cars; TSUS; summary judgment
Articles of aluminum, not coated or plated with precious metal. C.D. 4860
Construction; Tariff Schedules of the United States:
General headnotes and rules of interpretation:
Rule 10(h), C.D. 4860
Rule 10(ij), C.D. 4860
Item 657.40, C.D. 4860
Item 668.20, C.D. 4860
Item 668.50, C.D. 4860
Dedication to use test; "material" vs. "unfinished" article, C.D. 4860
Identity of individual article fixed with certainty; "material" vs. "unfinished" article, C.D. 4860
Judgments in appealed cases (p. —); Appeals:
79–32—Visible light emitting diodes; watch and clock dials; electrical indicator panels or visual signaling apparatus; TSUS
79–33—Monolithic integrated circuit chips; components of solid-state electronic watches; assemblies or subassemblies for watch movements (or clock movements); transistors and other related electronic crystal components; TSUS
Legislative history; Summaries of Trade & Tariff Information (TSUS, 1969), schedule 6, vol. 8, p. 277, C.D. 4860
"Material" vs. "unfinished" article:
Dedication to use test, C.D. 4860
Identity of individual article fixed with certainty, C.D. 4860
"NAPP" photopolymer plates, C.D. 4860
Other parts of printing machinery, C.D. 4860
Parts of printing machinery; unfinished printing plates, C.D. 4860
Printing plates, unfinished, C.D. 4860
Unfinished:
Parts of printing machinery, C.D. 4860
Printing plates; parts of printing machinery, C.D. 4860

Words and phrases:
Article, C.D. 4860
Material, C.D. 4860
Unfinished, C.D. 4860

UG 1 1980 322-275 Item 950-D T 1.11/3:14/31
Copies 377 contain

Customs Bulletin

Regulations, Rulings, Decisions, and Notices concerning Customs and related matters

and Decisions

of the United States Court of Customs and Patent Appeals and the United States Customs Court

9247

Vol. 14 JULY 30, 1980 No. 31

This issue contains

T.D. 80–186 through 80–192
ERRATUM
C.D. 4861 and 4862
C.R.D. 80–7
Protest abstracts P80/108 through P80/112
Reap. abstracts R80/218
International Trade Commission Notices

THE DEPARTMENT OF THE TREASURY
U.S. Customs Service

NOTICE

The abstracts, rulings, and notices which are issued weekly by the U.S. Customs Service are subject to correction for typographical or other printing errors. Users may notify the U.S. Customs Service, Logistics Management Division, Washington, D.C. 20229, of any such errors in order that corrections may be made before the bound volumes are published.

For sale by the Superintendent of Documents, U.S. Government Printing Office, Washington, D.C. 20402. Price: $2.25 (single copy domestic); $2.85 (single copy foreign). Subscription price: $85.00 a year domestic; $106.25 a year foreign.

U.S. Customs Service

Treasury Decisions

(T.D. 80–186)

Manmade Fiber Textile Products—Restriction on Entry

Restriction on entry of manmade fiber textile products manufactured or produced in Colombia

There is published below a directive of June 6, 1980, received by the Commissioner of Customs from the acting chairman, Committee for the Implementation of Textile Agreements, concerning restriction on entry of manmade fiber textile products in category 650 manufactured or produced in Colombia. This directive amends, but does not cancel, that committee's directive of June 26, 1979 (T.D. 79–205).

This directive was published in the Federal Register on June 11, 1980 (45 F.R. 39526), by the committee.

(QUO-2-1)

Dated: July 9, 1980.

WILLIAM D. SLYNE
(For Chester R. Krayton,
Director, Duty Assessment Division).

(T.D. 80–187)

[Bonds]

Approval of carrier's bond, Customs form 3587; amendment of T.D. 80–105

T.D. 80–105 relating to the temporary approval of the carrier's bond of the following principal is hereby amended as necessary to show that the bond is now permanent.

Dated: July 7, 1980.

Name of principal and surety	Date of bond	Date of approval	Filed with district director/area director/amount
Russ's Motor Service, Inc., 5070 Lake St., Melrose Park, IL; motor carrier; International Fidelity Insurance Co.	Feb. 27, 1980	Mar. 25, 1980	Chicago, IL; $25,000

BON-3-03

ALFRED G. SCHOLLE,
Director,
Carriers, Drawback, and Bonds Division.

(T.D. 80-188)

Bonds

Approval and discontinuance of consolidated aircraft bonds (air carrier blanket bonds), Customs form 7605

The following consolidated aircraft bonds have been approved or discontinued as shown below. The symbol "D" indicates that the bond previously outstanding has been discontinued on the month, day, and year represented by the figures which follow. "PB" refers to a previous bond, dated as represented by the figures in parentheses immediately following, which has been discontinued. If the previous bond was in the name of a different company or if the surety was different, the information is shown in a footnote at the end of the list.

Dated: July 7, 1980.

Name of principal and surety	Date term commences	Date of approval	Filed with district director/area director/amount
Aero Uruguay S.A., 905 16th St., Washington, D.C., Investors Insurance Company of America [1]	Apr. 21, 1980	June 18, 1980	Miami, FL; $100,000
Air Florida, Inc., 3900 N.W. 79th Ave., Suite 501, Miami, FL; The Aetna Casualty & Surety Co.[1]	May 2, 1980	May 13, 1980	Miami, FL; $100,000

[1] The foregoing principals have not been designated as carriers of bonded merchandise.

BON-3-01

ALFRED G. SCHOLLE,
Director,
Carriers, Drawback, and Bonds Division.

(T.D. 80–189)

Cotton Textile Products—Restriction on Entry

Restriction on entry of cotton textile products manufactured or produced in Macau

There is published below a directive of June 6, 1980, received by the Commissioner of Customs from the acting chairman, Committee for the Implementation of Textile Agreements, concerning restriction on entry of cotton textile products in category 337 manufactured or produced in Macau. This directive amends, but does not cancel, that committee's directive of January 25, 1980 (T.D. 80–73).

This directive was published in the Federal Register on June 11, 1980 (45 F.R. 39527), by the committee.

(QUO–2–1)

Dated: July 10, 1980.

WILLIAM D. SLYNE
(For Chester R. Krayton,
Director, Duty Assessment Division).

U.S. DEPARTMENT OF COMMERCE,
INTERNATIONAL TRADE ADMINISTRATION,
Washington, D.C., June 6, 1980.

Committee for the Implementation of Textile Agreements
COMMISSIONER OF CUSTOMS,
Department of the Treasury,
Washington, D.C.

DEAR MR. COMMISSIONER: This directive amends, but does not cancel, the directive issued to you on January 25, 1980 by the chairman, Committee for the Implementation of Textile Agreements, concerning imports into the United States of certain cotton, wool and manmade fiber textile products, produced or manufactured in Macau.

Under the terms of the Arrangement Regarding International Trade in Textiles done at Geneva on December 20, 1973, as extended on December 15, 1977; pursuant to the Bilateral Cotton, Wool and Man-Made Fiber Textile Agreement of November 29 and December 18, 1979, between the Governments of the United States and Portugal; and in accordance with the provisions of Executive Order 11651 of March 3, 1972, as amended by Executive Order 11951 of January 6, 1977, you are directed to prohibit, effective on June 11, 1980 and for the 12-month period beginning on January 1, 1980 and extending through December 31, 1980, entry into the United States for con-

sumption and withdrawal from warehouse for consumption of cotton textile products in category 337, produced or manufactured in Macau in excess of 28,000 dozen.[1]

Cotton textile products in category 337 which have been exported to the United States prior to January 1, 1980 shall not be subject to this directive.

Cotton textile products in category 337 which have been released from the custody of the U.S. Customs Service under the provisions of 19 U.S.C. 1448(b) or 1484(a)(1)(A) prior to the effective date of this directive shall not be denied entry under this directive.

A detailed description of the textile categories in terms of TSUSA numbers was published in the Federal Register on February 28, 1980 (45 F.R. 13172).

In carrying out the above directions, entry into the United States for consumption shall be construed to include entry for consumption into the Commonwealth of Puerto Rico.

The action taken with respect to the Government of Portugal and with respect to imports of cotton textile products from Macau has been determined by the Committee for the Implementation of Textile Agreements to involve foreign affairs functions of the United States. Therefore, the directions to the Commissioner of Customs, which are necessary for the implementation of such actions, fall within the foreign affairs exception to the rule-making provisions of 5 U.S.C. 553. This letter will be published in the Federal Register.

Sincerely,

ARTHUR GAREL,
Acting Chairman, Committee for the Implementation of Textile Agreements.

(T.D. 80-190)

Cotton and Manmade Fiber Textile Products—Restriction on Entry

Restriction on entry of cotton and manmade fiber textile products manufactured or produced in Poland

There is published below a directive of June 19, 1980, received by the Commissioner of Customs from the chairman, Committee for the Implementation of Textile Agreements, concerning restrictions on entry of cotton and manmade fiber textile products in categories 359 and 612 manufactured or produced in Poland. This directive amends,

[1] The level of restraint has not been adjusted to reflect any imports after Dec. 31, 1979. Imports during the January-March period have amounted to 11,019 dozen.

but does not cancel, that committee's directive of December 20, 1979 (T.D. 80–61).

This directive was published in the Federal Register on June 25, 1980 (45 F.R. 42784), by the committee.

(QUO–2–1)

Dated: July 10, 1980.

WILLIAM D. SLYNE,
(For Chester R. Krayton,
Director, Duty Assessment Division).

U.S. DEPARTMENT OF COMMERCE,
INTERNATIONAL TRADE ADMINISTRATION,
Washington, D.C., June 19, 1980.

Committee for the Implementation of Textile Agreements

COMMISSIONER OF CUSTOMS,
Department of the Treasury,
Washington, D.C.

DEAR MR. COMMISSIONER: This directive amends, but does not cancel, the directive of December 20, 1979 from the chairman of the Committee for the Implementation of Textile Agreements which directed you to prohibit, for the 12-month period beginning on January 1, 1980 and extending through December 31, 1980, entry into the United States for consumption of cotton and manmade fiber textile products in categories 359 and 612, among others.

Under the terms of the Arrangement Regarding International Trade in Textiles done at Geneva on December 20, 1973, as extended on December 15, 1977; pursuant to the Bilateral Cotton, Wool and Man-Made Fiber Textile Agreements on January 9, and 21, 1978, as amended, between the Governments of the United States and the Polish People's Republic; and in accordance with the provisions of Executive Order 11651 of March 3, 1972, as amended by Executive Order 11951 of January 6, 1977, you are directed to prohibit, effective on June 19, 1980 and for the 12-month period beginning on January 1, 1980 and extending through December 31, 1980, entry into the United States for consumption and withdrawal from warehouse for consumption of cotton and manmade fiber textile products in categories 359 and 612, produced or manufactured in Poland in excess of the following levels of restraint:

Category	*Adjusted 12-month levels of restraint* [1]
359	600,000 pounds
612	2, 000, 000 square yards

[1] The levels of restraint have not been adjusted to reflect any imports after Dec. 31, 1979.

The action taken with respect to the Government of the Polish People's Republic and with respect to imports of cotton and manmade fiber textile products from Poland has been determined by the Committee for the Implementation of Textile Agreements to involve foreign affairs functions of the United States.

Therefore, the directions to the Commissioner of Customs, which are necessary for the implementation of such actions, fall within the foreign affairs exception to the rulemaking provisions of 5 U.S.C. 553. This letter will be published in the Federal Register.

Sincerely,

PAUL T. O'DAY,
Chairman, Committee for the Implementation of Textile Agreements.

Cotton and Manmade Fiber Textile Products—Restriction on Entry

(T.D. 80–191)

Restriction on entry of cotton and manmade fiber textile products manufactured or produced in India

There is published below a directive of June 25, 1980, received by the Commissioner of Customs from the acting chairman, Committee for the Implementation of Textile Agreements, concerning restriction on entry of cotton and manmade fiber textile products in certain categories manufactured or produced in India. This directive amends, but does not cancel, that committee's directive of December 21, 1979 (T.D. 80–58).

This directive was published in the Federal Register on June 30, 1980 (45 F.R. 43819), by the committee.

(QUO–2–1)

Dated: July 10, 1980.

WILLIAM D. SLYNE,
(For Chester R. Krayton,
Director, Duty Assessment Division).

(T.D. 80-192)

Synopses of Drawback Decisions

The following are synopses of drawback rates issued March 14, 1980, to May 28, 1980 inclusive, pursuant to sections 22.1 through 22.5, inclusive, Customs Regulations.

In the synopses below are listed for each drawback rate approved under 19 U.S.C. 1313 (a) and (b), the name of the company, the specified articles on which drawback is authorized, the merchandise which will be used to manufacture or produce these articles, the factories where the work will be accomplished, the date the statement was signed, the basis for determining payment, the Regional Commissioner to whom the rate was forwarded, and the date on which it was forwarded.

Dated: July 10, 1980.

ALFRED G. SCHOLLE,
Director,
Carriers, Drawback, and Bonds Division.

(A) Company: Amdahl Corp.
Section 1313(a) Articles: Computer systems.
Section 1313(a) Merchandise: Various component parts including multiple chip carriers, frames, and assemblies.
Section 1313(b) Articles: Computer systems.
Section 1313(b) Merchandise: Various component parts including multiple chip carriers, frames, and assemblies.
Factory: Sunnyvale, Calif.
Statement signed: October 3, 1979.
Basis of claim: Appearing in.
Rate forwarded to Regional Commissioner of Customs: San Francisco, March 25, 1980.

(B) Company: Arcata Publications Group.
Section 1313(a) Articles: Magazines.
Section 1313(a) Merchandise: Uncoated groundwood printing paper.
Section 1313(b) Articles: Magazines.
Section 1313(b) Merchandise: Coated and uncoated groundwood printing paper.
Factory: Los Angeles, Calif.
Statement signed: November 7, 1979.
Basis of claim: Used in, less valuable waste.
Rate forwarded to Regional Commissioner of Customs: Chicago, April 1, 1980.

322-278 O - 80 - 2

(C) Company: Arcata Publications Group, Inc.
Section 1313(a) Articles: Magazines.
Section 1313(a) Merchandise: Uncoated groundwood printing paper.
Section 1313(b) Articles: Magazines.
Section 1313(b) Merchandise: Coated and uncoated groundwood printing paper.
Factory: Depew, N.Y.
Statement signed: November 7, 1979.
Basis of claim: Used in, less valuable waste.
Rate forwarded to Regional Commissioner of Customs: Chicago, April 1, 1980.

(D) Company: W. R. Bean & Sons, Inc.
Section 1313(a) Articles: Magazines.
Section 1313(a) Merchandise: Uncoated groundwood printing paper.
Section 1313(b) Articles: Magazines.
Section 1313(b) Merchandise: Coated and uncoated groundwood printing paper.
Factory: Atlanta, Ga.
Statement signed: November 7, 1979.
Basis of claim: Used in, less valuable waste.
Rate forwarded to Regional Commissioner of Customs: Chicago, April 1, 1980.
Revokes: T.D. 54758–C.

(E) Company: Bell & Howell Co.
Section 1313(a) Articles: Projectors, binoculars, language masters.
Section 1313(a) Merchandise: Lenses, production parts, subassemblies, and prisms.
Section 1313(b) Articles: Motion picture and overhead projectors.
Section 1313(b) Merchandise: Projection lenses, lens elements.
Factory: Chicago, Ill.
Statement signed: March 5, 1980.
Basis of claim: Appearing in.
Rate forwarded to Regional Commissioner of Customs: Chicago, May 16, 1980.
Revokes: T.D. 48281–E; T.D. 44676–E; and T.D. 54975–E, as amended by T.D. 66–49–J.

(F) Company: Brown Printing Co., Inc.
Section 1313(a) Articles: Magazines.
Section 1313(a) Merchandise: Uncoated groundwood printing paper.
Section 1313(b) Articles: Magazines.
Section 1313(b) Merchandise: Coated and uncoated groundwood printing paper.

Factory: Waseca, Minn.
Statement signed: November 7, 1979.
Basis of claim: Used in, less valuable waste.
Rate forwarded to Regional Commissioner of Customs: Chicago, April 1, 1980.

(G) Company: R. R. Donnelly & Sons Co.
Section 1313(a) Articles: Magazines.
Section 1313(a) Merchandise: Uncoated groundwood printing paper.
Section 1313(b) Articles: Magazines.
Section 1313(b) Merchandise: Coated and uncoated groundwood printing paper.
Factories: Chicago, Ill., Old Saybrook, Conn., Gallatin, Tenn., Warsaw, Ind., and Lancaster, Pa.
Statement signed: November 7, 1979.
Basis of claim: Used in, less valuable waste.
Rate forwarded to Regional Commissioner: Chicago, April 1, 1980.
Revokes: T.D. 54339–D as amended by T.D. 54758–D.

(H) Company: Exxon Corp., Exxon Chemical Co. U.S.A. Division.
Section 1313(a) Articles: Paradyne 80 and other additives for lubricating oils or fuels.
Section 1313(a) Merchandise: Biphenyl alcohol, Paranox 361, ECA 4818, and various other chemicals and components.
Section 1313(b) Articles: Additives for lubricating oils or fuels.
Section 1313(b) Merchandise: Chemicals and components as listed in manufacturer's statement.
Factories: Bayonne and Linden, N.J., Morgantown, W. Va.
Statement signed: June 4, 1979.
Basis of claim: Used in.
Rate forwarded to Regional Commissioners of Customs: New York and Houston, March 17, 1980.
Revokes: Unpublished Headquarters authorization letter of February 5, 1980.

(I) Company: General Electric Co.
Section 1313(a) Articles: Gears, turbines, and generators.
Section 1313(a) Merchandise: Gear, turbine, and generator forgings.
Section 1313(b) Articles: Gears, turbines, and generators.
Section 1313(b) Merchandise: Gear, turbine, and generator forgings.
Factory: Lynn, Mass.
Statement signed: July 17, 1979.
Basis of claim: Used in, less valuable waste.

Rate forwarded to Regional Commissioner of Customs: New York, March 20, 1980.
Revokes: T.D. 55587–F and T.D. 56384–T as amended by T.D. 66–60–P and T.D. 72–274–U.

(J) Company: General Electric Co., Television Business Department.
Section 1313(a) Articles: Television receivers.
Section 1313(a) Merchandise: Various components and subassemblies.
Section 1313(b) Articles: Television receivers.
Section 1313(b) Merchandise: Various components and subassemblies.
Factory: Suffolk, Va.
Statement signed: March 14, 1980.
Basis of claim: Appearing in.
Rate forwarded to Regional Commissioner of Customs: Baltimore, March 28, 1980.
Revokes: T.D. 79–303–D.

(K) Company: Glen Raven Mills, Inc.
Section 1313(a) Articles: Multilobal bright textured polyester yarn, 65 or 70 denier.
Section 1313(a) Merchandise: Multilobal polyester yarn, nontextured, 65 or 70 denier.
Section 1313(b) Articles: Multilobal bright textured polyester yarn, 65 or 70 denier.
Section 1313(b) Merchandise: Multilobal polyester yarn, nontextured, 65 or 70 denier.
Factories: Altamahaw and Newland, N.C.
Statement signed: November 19, 1979.
Basis of claim: Appearing in.
Rate forwarded to Regional Commissioner of Customs: Miami, March 14, 1980.
Revokes: T.D. 79–78–I.

(L) Company: Glen Raven Mills, Inc.
Section 1313(a) Articles: Multilobal bright textured polyester yarn, 90 denier.
Section 1313(a) Merchandise: Multilobal polyester yarn, nontextured, 90 denier.
Section 1313(b) Articles: Multilobal bright textured polyester yarn, 90 denier.
Section 1313(b) Merchandise: Multilobal polyester yarn, nontextured, 90 denier.
Factories: Altamahaw and Newland, N.C.
Statement signed: November 19, 1979.

Basis of claim: Appearing in.
Rate forwarded to Regional Commissioner of Customs: Miami, March 14, 1980.

(M) Company: Great Northern Juice Corp.
Section 1313(a) Articles: Reconstituted orange juice and frozen concentrated orange juice.
Section 1313(a) Merchandise: Concentrated orange juice for manufacturing.
Section 1313(b) Articles: Reconstituted orange juice and frozen concentrated orange juice.
Section 1313(b) Merchandise: Concentrated orange juice for manufacturing.
Factory: Tonawanda, N.Y.
Statement signed: November 24, 1978.
Basis of claim: Used in.
Rate forwarded to Regional Commissioner of Customs: Boston, April 17, 1980.
Revokes: T.D. 56334–P.

(N) Company: W. F. Hall Printing Co.
Section 1313(a) Articles: Magazines.
Section 1313(a) Merchandise: Uncoated groundwood printing paper.
Section 1313(b) Articles: Magazines.
Section 1313(b) Merchandise: Coated and uncoated groundwood printing paper.
Factory: Chicago, Ill.
Statement signed: November 7, 1979.
Basis of claim: Used in, less valuable waste.
Rate forwarded to Regional Commissioner of Customs: Chicago, April 1, 1980.

(O) Company: The Heil Co.
Section 1313(a) Articles: Solid waste systems.
Section 1313(a) Merchandise: Pulverizer (shredder).
Section 1313(b) Articles: Truck equipment, highway bulk transports, solid waste systems, dehydration systems.
Section 1313(b) Merchandise: Hot-rolled steel sheet and plate; hot-rolled steel low alloy plate.
Factories: Milwaukee, Wis., Fort Payne, Ala., Lancaster, Pa., Athens, Tenn., and Tishomingo, Miss.
Statement signed: January 21, 1980.
Basis of claim: Section 1313(a)—used in; section 1313(b)—appearing in.

Rate forwarded to Regional Commissioner of Customs: Chicago, May 13, 1980.
Revokes: T.D. 55164–B, T.D. 52548–I, T.D. 78–407–I, and unpublished Headquarters authorization letter of July 13, 1979.

(P) Company: Masco Corp., Burns Cold Forge Co. Division.
Section 1313(a) Articles: Steel forged truck and automobile transmission parts; steel forged tractor power takeoff shafts.
Section 1313(a) Merchandise: Carbon and carbon alloy steel bars.
Section 1313(b) Articles: Steel forged truck and automobile transmission parts; steel forged tractor power take-off shafts.
Section 1313(b) Merchandise: Carbon and carbon alloy steel bars.
Factory: Minerva, Ohio.
Statement signed: January 28, 1980.
Basis of claim: Appearing in.
Rate forwarded to Regional Commissioner of Customs: Chicago, May 28, 1980.

(Q) Company: Meiwa, U.S.A., Inc.
Section 1313(a) Articles: Unfinished polyvinyl products.
Section 1313(a) Merchandise: Polyvinyl chloride film.
Section 1313(b) Articles: Unfinished polyvinyl products.
Section 1313(b) Merchandise: Polyvinyl chloride dispersion resin.
Factory: Charlotte, N.C.
Statement signed: May 2, 1980.
Basis of claim: Appearing in.
Rate forwarded to Regional Commissioner of Customs: Miami, May 22, 1980.
Revokes: T.D. 80–94–M.

(R) Company: Motor Coach Industries, Inc.
Section 1313(a) Articles: Buses.
Section 1313(a) Merchandise: Parts for buses.
Section 1313(b) Articles: Buses.
Section 1313(b) Merchandise: Parts for buses.
Factory: Pembina, N. Dak.
Statement signed: December 13, 1979.
Basis of claim: Appearing in.
Rate forwarded to Regional Commissioner of Customs: New York, May 13, 1980.

(S) Company: NTN Elgin Corp.
Section 1313(a) Articles: Finished ball bearings and ball bearing parts.
Section 1313(a) Merchandise: High-carbon, chromium ball bearing

steel pipes and bars, inner rings, outer rings, seals, shields, and balls (finished and unfinished).

Section 1313(b) Articles: Finished ball bearings in addition to manufactured parts.

Section 1313(b) Merchandise: High-carbon, chromium ball bearing steel pipes and bars, retainers, inner rings, outer rings, seals, shields, and finished and unfinished balls.

Factory: Elgin, Ill.

Statement signed: July 18, 1979.

Basis of claim: Appearing in.

Rate forwarded to Regional Commissioner of Customs: New York, May 14, 1980.

(T) Company: Regensteiner Publishing Enterprises, Inc.

Section 1313(a) Articles: Magazines.

Section 1313(a) Merchandise: Uncoated groundwood printing paper.

Section 1313(b) Articles: Magazines.

Section 1313(b) Merchandise: Coated and uncoated groundwood printing paper.

Factory: Chicago, Ill.

Statement signed: November 7, 1979.

Basis of claim: Used in, less valuable waste.

Rate forwarded to Regional Commissioner of Customs: Chicago, April 1, 1980.

(U) Company: Rexnord Inc., Nordberg Machinery Group.

Section 1313(a) Articles: Mining machinery.

Section 1313(a) Merchandise: Rough and finished castings and forgings.

Section 1313(b) Articles: Mining machinery.

Section 1313(b) Merchandise: Hot-rolled steel plate; rough and finished castings and forgings.

Factory: Milwaukee, Wis.

Statement signed: February 26, 1980.

Basis of claim: Section 1313(a)—used in (as to finished castings and forgings), used in, less valuable waste (as to rough castings and forgings); section 1313(b)—appearing in (as to steel plate), used in (as to finished castings and forgings), used in, less valuable waste (as to rough castings and forgings).

Rate forwarded to Regional Commissioner of Customs: Chicago, May 14, 1980.

Revokes: T.D. 79–84–V.

(V) Company: Sharp Manufacturing Co. of America, Division of Sharp Electronics Corp.
Section 1313(a) Articles: Televisions, stereos, microwave ovens, copiers, refrigerators, calculators, and other electric and/or electronic commodities.
Section 1313(a) Merchandise: Megatron tubes, television picture tubes and various other electric and/or electronic parts and assemblies.
Section 1313(b) Articles: Televisions, stereos, microwave ovens, copiers, refrigerators, calculators, and other electric and/or electronic commodities.
Section 1313(b) Merchandise: Megatron tubes, television picture tubes, and various other electric and/or electronic parts and assemblies.
Factory: Memphis, Tenn.
Statement signed: March 28, 1980.
Basis of claim: Used in.
Rate forwarded to Regional Commissioner of Customs: New York, May 22, 1980.

(W) Company: Texas Color Printers, Inc.
Section 1313(a) Articles: Magazines.
Section 1313(a) Merchandise: Uncoated groundwood printing paper.
Section 1313(b) Articles: Magazines.
Section 1313(b) Merchandise: Coated and uncoated groundwood printing paper.
Factory: Dallas, Tex.
Statement signed: November 7, 1979.
Basis of claim: Used in, less valuable waste.
Rate forwarded to Regional Commissioner of Customs: Chicago, April 1, 1980.

(X) Company: Trinity Industries, Inc. (L.P.G. Division).
Section 1313(a) Articles: Steel storage tanks.
Section 1313(a) Merchandise: Hot-rolled carbon steel plates; steel hemispherical heads.
Section 1313(b) Articles: Steel storage tanks.
Section 1313(b) Merchandise: Hot-rolled carbon steel plates; steel hemispherical heads.
Factories: Dallas, Fort Worth, and Denton, Tex., Rocky Mount, N.C., West Memphis, Ark., New London, Minn., Beardstown, Ill., and Jackson, Ga.
Statement signed: March 14, 1980.
Basis of claim: Used in, less valuable waste.
Rate forwarded to Regional Commissioner of Customs: Houston, April 7, 1980.

(Y) Company: A. D. Weiss Lithograph.
Section 1313(a) Articles: Magazines.
Section 1313(a) Merchandise: Uncoated groundwood printing paper.
Section 1313(b) Articles: Magazines.
Section 1313(b) Merchandise: Coated and uncoated groundwood printing paper.
Factory: Hollywood, Fla.
Statement signed: November 7, 1979.
Basis of claim: Used in, less valuable waste.
Rate forwarded to Regional Commissioners of Customs: Chicago and Miami, April 1, 1980.

(Z) Company: World Color Press, Inc.
Section 1313(a) Articles: Magazines.
Section 1313(a) Merchandise: Uncoated groundwood printing paper.
Section 1313(b) Articles: Magazines.
Section 1313(b) Merchandise: Coated and uncoated groundwood printing paper.
Factory: Effingham, Ill.
Statement signed: November 7, 1979.
Basis of claim: Used in, less valuable waste.
Rate forwarded to Regional Commissioner of Customs: Chicago, April 1, 1980.

322-278 O - 80 - 3

ERRATUM

In CUSTOMS BULLETIN, Vol. 14, No. 27, dated July 2, 1980, in T.D. 80–161, on page 4, correct the second note immediately following footnote 1 to read:

The foregoing principals have been designated as carriers of bonded merchandise.

In CUSTOMS BULLETIN, Vol. 13, No. 50, dated December 12, 1979, in T.D. 79–299, on page 1, the surety for the principal US Air Inc., should be corrected to Aetna Insurance Co.

Decisions of the United States Customs Court

United States Customs Court

One Federal Plaza
New York, N.Y. 10007

Chief Judge

Edward D. Re

Judges

Paul P. Rao
Morgan Ford
Scovel Richardson
Frederick Landis
James L. Watson
Herbert N. Maletz
Bernard Newman
Nils A. Boe

Senior Judge

Samuel M. Rosenstein

Clerk

Joseph E. Lombardi

Customs Decisions

(C.D. 4861)

BEN R. HENDRIX TRADING CO., INC., PLAINTIFF, *v.* THE UNITED STATES, DEFENDANT

Memorandum Opinion and Order Granting Defendant's Motion to Dismiss

Court No. 79-6-01042

BOE, Judge: In the proceedings presently before this court, the defendant moves to dismiss the complaint and amended complaint of

the plaintiff filed herein on the grounds that (1) the court lacks jurisdiction of the subject matter of the action, and (2) the allegations of the complaint and the relief sought therein fail to state a claim upon which relief may be granted.

From an examination of the plaintiff's complaint and amended complaint, the plaintiff appears to seek relief through a variety of imprecise and ambiguous designations. In sum, however, it appears that the plaintiff requests that this court assume jurisdiction of the above-entitled action in order to (1) grant to the plaintiff an award in the amount of $30,000,000 for damages and costs resulting from the alleged negligent and wrongful acts on the part of U.S. Customs officials and, in particular, the District Director of Customs at Laredo, Tex., and (2) issue what is termed in the within pleadings an "administrative ruling" with respect to the validity of the seizure of merchandise imported by the plaintiff, not entered and while in the joint custody under bond of the Customs Service and the warehouse proprietor, by a creditor through judicial process in a State court.

The protest upon which the summons and complaint in the within action are predicated was denied by the Customs Service on December 28, 1978, for the reason that it was untimely filed. In view of the insufficiency of the facts alleged with respect thereto, and particularly with respect to the paucity of facts as to the allegation that the Customs Service refused to accept prior protests of the plaintiff for filing in April of 1973, this court would deem it inappropriate to rule on the question of the timeliness in the filing of the protest herein in the absence of an evidentiary hearing with respect thereto. From the complaint and the amended complaint on file herein, however, it is patent that the aforesaid pleadings affirmatively disclose that this court does not have jurisdiction over the subject matter of the within action, and that the allegations therein fail to state a claim upon which relief may be granted.

The relief sought by the plaintiff relating to an award of pecuniary damages sounds in tort. It is axiomatic that the limited jurisdiction of the Customs Court is prescribed solely by the provisions of 28 U.S.C. § 1582. The jurisdiction of this court does not include actions in personam resulting from alleged negligent or wrongful acts of Government officials or agents. As provided in 28 U.S.C. § 1346, such actions are reserved to the exclusive jurisdiction of the U.S. district courts and/or the U.S. Court of Claims.

From the allegations in plaintiff's complaint and amended complaint as well as from the reported decisions of the Federal courts in which the plaintiff has instituted prior proceedings, it appears that after the sequestration ordered by the State court of the merchandise imported by the plaintiff and located in plaintiff's own warehouse under cus-

toms bond, plaintiff sought a declaratory judgment in the U.S. District Court, Southern District of Texas, Brownsville Division, seeking to have the attempted seizure of the subject merchandise by virtue of the order of the State court declared void.[1] The U.S. district court in said proceedings determined in its declaratory judgment that the State court properly could adjudicate the rights with respect to the subject merchandise. It may be noted that in said proceedings, George P. Schultz, as the Secretary of the Treasury of the United States, and the Customs officials of the U.S. Government were made party defendants.

With only scant reference to the foregoing proceedings in the U.S. district court in its complaint and amended complaint, the plaintiff now turns to this court in the attempt to secure what has been strangely termed in plaintiff's pleading as an administrative ruling with respect to the validity of the judicial proceedings conducted in State court relating to the imported merchandise presumably under bond and in the joint custody of the Customs Service and the warehouse proprietor (the plaintiff).

From the pleadings, however, no indication is contained therein with respect to the present status of the merchandise in question. It is only through the further examination of court decisions relating to the very matters here in issue that this court is apprised of the true nature of the alleged controversy to which our attention has been directed and relief sought.

It appears that after entry of the declaratory judgment of the U.S. district court an appeal was instituted by the plaintiff in the U.S. Circuit Court of Appeals, Fifth Circuit, in which appeal proceedings the plaintiff, plaintiff's creditor and various customs officials were before the court.[2] From the opinion of Chief Judge Brown on behalf of the circuit court of appeals, it is revealed that after the institution of the appeal, the plaintiff filed a chapter XI reorganization proceeding in bankruptcy. During the course of the chapter XI proceedings all parties moved to sell the merchandise, which sale was conducted under the jurisdiction of the Bankruptcy Court and the merchandise in question delivered to the buyers. In determining that the appeal cause had become moot due to the admittedly valid sale of the merchandise in question by the Bankruptcy Court in a proceeding voluntary initiated by the plaintiff, Chief Judge Brown stated:

> Both Customs officials and Hendrix recognized that the Bankruptcy Court had power to order such a sale. Indeed, as

[1] *J. Henry Schroeder Banking Corporation* v. *George P. Schultz, Secretary of the Treasury of the United States; Ben R. Hendrix Trading Co., Inc.* v. *J. Henry Schroeder Banking Corporation*, 373 Fed. Supp. 1283 (S.D. Texas 1974).

[2] *J. Henry Schroeder Banking Corp.* v. *W. Michael Blumenthal, Secretary of the Treasury of the United States; Ben R. Hendrix Trading Co.* v. *J. Henry Schroeder Banking Corp.*, 560 F.2d 1192 (5th Cir. 1977).

> debtor, Hendrix had enough power and control over the goods to surrender them to the Bankruptcy Court. Thereafter the goods were not subject to any restraint by State officials and were subject only to payment or security for Customs' duties. Hendrix owns no other merchandise or liquor under Customs' bond and is no longer actively involved in importing and exporting bonded merchandise.
>
> The controversy that gave rise to the actions for declaratory judgments by both Hendrix and Schroeder was whether control of the liquor would be with Hendrix or with the State court officers and those who purchased it at the aborted judicial sales. Since the liquor has now been sold in an admittedly valid manner and is in the hands of third parties, none of the parties to the controversy below can be said to have any right of control over the goods. Thus, there is no longer any case or controversy. Hendrix owns no other merchandise in bond and is no longer in the business of importing and exporting bonded merchandise, so there is no likelihood that a similar controversy might arise in the future. (Id. at 1194–95.)

From the record in the within proceedings before this court as well as from the prior proceedings initiated by the plaintiff with reference to the very issue herein presented, it appears that relief presently is sought by the plaintiff in this court with respect to a subject matter consisting of merchandise which has been disposed of through sale and which no longer exists in any form or entity over which this court might exercise its jurisdiction. It is clear, therefore, that the question presented to this court relating to the validity of the exercise of the judicial process of a State court upon the merchandise imported by the plaintiff while in the joint custody of the Customs Service and the warehouse proprietor is thus moot. In the case of *Mills* v. *Green*, 159 U.S. 651, 653 (1895), the Supreme Court stated:

> The duty of this Court, as of every other judicial tribunal, is to decide actual controversies by a judgment which can be carried into effect, and not to give opinions upon moot questions or abstract propositions, or to declare principles or rules of law which can not affect the matter in issue in the case before it. It necessarily follows that when, pending an appeal from the judgment of a lower court, and without any fault of the defendant, an event occurs which renders it impossible for this Court, if it should decide the case in favor of the plaintiff, to grant him any effectual relief whatever, the Court will not proceed to a formal judgment, but will dismiss the appeal. And such a fact, when not appearing on the record, may be proved by extrinsic evidence.

Further, in the case of *California* v. *San Pablo & Tulare Railroad Co.*, 149 U.S. 308, 314 (1893), the Supreme Court stated:

> The duty of this Court, as of every judicial tribunal, is limited to determining rights of persons or of property which are actually controverted in the particular case before it. When, in determin-

> ing such rights, it becomes necessary to give an opinion upon a question of law, that opinion may have weight as a precedent for future decisions. But the Court is not empowered to decide moot questions or abstract propositions, or to declare, for the Government of future cases, principles or rules of law which cannot affect the result as to the thing in issue in the case before it. No stipulation of parties or counsel, whether in the case before the Court or in any other case, can enlarge the power, or affect the duty, of the Court in this regard.

In the instant proceedings, we are faced with the fact that the imported merchandise of the plaintiff, which was the subject matter of prior litigation in the Federal courts, has been sold with the consent of the plaintiff during the course of the bankruptcy proceedings. Certainly, no effectual relief now can be granted by this court with respect to such nonexistent merchandise, which at one point in time, may have formed the subject matter over which jurisdiction of this court might have existed.

Notwithstanding by whatever name it may be allegedly termed, the relief sought by the plaintiff in its request for an administrative ruling, in essence, is merely a request for an advisory opinion by this court, presumably for such use in pending bankruptcy proceedings as might prove of benefit in connection with the ultimate distribution of proceeds therein.[3] The lack of power of this court or of any Federal court to issue such advisory opinions needs no further comment or explanation. *Oil Workers Unions* v. *Missouri*, 361 U.S. 363, 367 (1960); *United States* v. *Alaska SS Co.*, 253 U.S. 113, 116 (1920); and *North Carolina* v. *Rice*, 404 U.S. 244, 246 (1971).

In view of the foregoing and good cause appearing, it is hereby

ORDERED that the motion of the defendant is, accordingly, granted and the above-entitled action be and is hereby dismissed.

Dated at New York, N. Y., this first day of July, 1980.

(C.D. 4862)

INTERNATIONAL SPRING MFG. CO., PLAINTIFF, *v.* UNITED STATES, DEFENDANT

LEAF SPRINGS

Leaf springs which are suitable for use on various kinds of non self-propelled trailers held to be properly classified by Customs under item 652.88 as other springs rather than under item 652.84 as springs suitable for motor vehicle suspension, as claimed by plaintiff.

---

[3] *See* Facts Of The Case at 9-10, attached to plaintiff's complaint.

Court No. 74-9-02617

[Judgment for defendant.]

(Decided July 2, 1980)

Doherty and Melahn (*William E. Melahn* at the trial; *Walter E. Doherty, Jr.* and *Peter T. Middleton* on the briefs) for the plaintiff.

Alice Daniel, Assistant Attorney General; *Joseph I. Liebman*, Attorney in Charge, Field Office for Customs Litigation (*Robert H. White* at the trial and on the brief), for the defendant.

MALETZ, Judge: The problem in this case is to determine the proper tariff classification of leaf springs of base metal which were imported from Canada in 1973 and 1974. Customs classified the articles under item 652.88 of the Tariff Schedules of the United States (TSUS) which provides for other springs and leaves for springs, of base metal, and assessed duty at the rate of 9.5 percent ad valorem. Plaintiff claims the articles are properly classifiable under item 652.84 which provides for springs and leaves for springs, of base metal, suitable for motor vehicle suspension and prescribes a duty rate of 4 percent ad valorem.

In this setting, the only issue is whether the imported springs are suitable for motor vehicle suspension. Any resolution of this issue depends on whether the non-self-propelled trailers for which the importations are suitable are motor vehicles within the meaning of item 652.84.

The relevant provisions of TSUS read as follows:

Schedule 6, Part 3, Subpart F.—Miscellaneous Metal Products

Springs and leaves for springs, of base metal:

[Claimed]		
652.84	Suitable for motor vehicle suspension	4% ad val.
*	* * * * * *	*
[Classified]		
652.88	Other	9.5% ad val.

Also relevant to plaintiff's claim are the following provisions of TSUS:

Schedule 6, Part 6, Subpart B.—Motor Vehicles

* * * * * * *

Subpart B headnotes:

1. For the purposes of this subpart—

* * * * * * *

(b) automobile truck tractors imported with their trailers are, together with their trailers, classifiable in item 692.02, but, if such tractors or trailers are separately imported, they are classifiable in item 692.27.

* * * * * * *

Motor vehicles (except motorcycles) for the transport of persons or articles:

	Automobile trucks valued at $1,000 or more, and motor buses:	
692.02	Automobile trucks	8.5% ad val.
*	* * * * * *	*
	Chassis, bodies (including cabs), and parts of the foregoing motor vehicles:	
*	* * * * * *	*
692.27	Other	4% ad val.
*	* * * * * *	*
692.60	Vehicles (including trailers), not self-propelled, not specially provided for, and parts thereof	8% ad val.

General headnotes and rules of interpretation:

10. *General interpretative rules.*—For the purposes of these schedules—

* * * * * * *

(b) the titles of the various schedules, parts, and subparts and the footnotes therein are intended for convenience in reference only and have no legal or interpretative significance;

The importations consist of four types of leaf springs which are suitable for and used in various kinds of non-self-propelled trailers such as utility trailers for carrying air compressors, generating units, etc.; boat trailers, horse trailers, and mobile homes. The springs are not used in self-propelled vehicles nor is there any evidence that they are suitable for such use.[1]

Against this background, it must be concluded for the reasons that follow that the non-self-propelled trailers for which the imported springs are suitable are not motor vehicles within the meaning of item 652.84, as claimed by plaintiff. In this circumstance, the court holds that the springs in question were correctly classified by Customs under item 652.88 as other springs and leaves for springs, of base metal.

As stated before, resolution of the instant controversy turns on whether the term "motor vehicle" as used in item 652.84 is limited to self-propelled vehicles or whether, as plaintiff claims, the term includes non-self-propelled vehicles such as the trailers here involved. And in construing that term, it is basic that in the absence of a contrary legislative intent, the common meaning controls. It is to be added that the common meaning of a term is a matter of law to be determined by the court, for which purpose the court may consult dictionaries and other authorities as an aid to the court's own knowledge. *Trans-Atlantic Company* v. *United States*, 60 CCPA 100, 102, C.A.D. 1088, 471 F.2d 1397, 1398 (1973).

---

[1] Suitability for use in terms of TSUS means that the article in question must be actually, practically, and commercially fit for the intended use. E.g., *United States* v. *Norman G. Jensen, Inc.*, 64 CCPA 51, 53, C.A.D. 1183, 550 F.2d 662, 664 (1977); Sturm, *Customs Law and Administration* (1980), § 53.3, p. 501.

Funk & Wagnalls New Standard Dictionary of the English Language (Unabridged, 1956) defines "motor vehicle" as:

> n. Any form of self-propelling vehicle.

Webster's Third New International Dictionary of the English Language (Unabridged, 1963) defines "motor vehicle" as:

> n. an automotive vehicle not operated on rails; *esp.* one with rubber tires or for use on highways.

The same source defines "automotive" (vehicle) as:

> 2: of, relating to, or concerned with vehicles or machines that propel themselves (as automobiles, trucks, planes, motor boats).

The Harper Encyclopedia of Science, volume III (1st ed. 1963) defines "motor vehicles" as follows (p. 806):

> Motor vehicle: A self-propelled conveyance used for passenger transportation (automobiles, buses, motorcycles) or for hauling freight (trucks). * * *

A similar definition appears in the McGraw-Hill Dictionary of Scientific and Technical Terms (1974), which restricts motor vehicles to self-propelled devices.

Plaintiff, though, points out that the National Traffic and Motor Vehicle Safety Act of 1966 defines a "motor vehicle" as "any vehicle driven or drawn by mechanical power manufactured primarily for use on the public streets, roads and highways, except any vehicle operated exclusively on a rail or rails." 15 U.S.C. § 1391(3).[2] Based on the definition contained in that and other nontariff statutes, plaintiff argues that the term "motor vehicle" includes any non-self-propelled vehicle that is used on public highways. However, it is settled that the definition of a term contained in a statute or regulation dealing with nontariff matters, such as public safety, does not determine the common meaning of that term for tariff purposes. *Pharmacia Laboratories, Inc.* v. *United States*, 67 CCPA—, C.A.D. 1235, 609 F. 2d 491, 493 (1979); *United States* v. *Mercantil Distribuidora et al.*, 43 CCPA 111, 116, C.A.D. 617 (1956); *Marine Products Co.* v. *United States*, 42 Cust. Ct. 154, 155, C.D. 2080 (1959).

Furthermore, it is apparent from item 692.60, supra, which covers "Vehicles (including trailers), not self-propelled, not specially provided for, and parts thereof," that Congress intended that various types of non-self-propelled trailers are to be classified as vehicles and not as motor vehicles.[3]

Plaintiff next argues that headnote 1(b), schedule 6, part 6, subpart B, supra, evidences an intent by Congress to classify non-self-pro-

---

[2] Plaintiff's witnesses relied on this definition of "motor vehicle" contained in the Safety Act of 1966 for their conclusion that the term "motor vehicle" included any vehicle which was drawn by another vehicle on the highways or roads.

[3] The fact that item 692.60 is contained in schedule 6, part 6, subpart B, which is entitled "Motor Vehicles," is of no consequence. This is because general interpretative rule 10(b), supra, provides that "the titles of the various schedules, parts, and subparts * * * are intended for convenience in reference only and have no legal or interpretative significance."

pelled vehicles, such as the trailers here involved, as motor vehicles for the purpose of TSUS. That headnote (quoted before) provides:

> 1. For the purposes of this subpart—
>
> * * * * * * *
>
> (b) automobile truck tractors imported with their trailers are, together with their trailers, classifiable in item 692.02, but, if such tractors or trailers are separately imported, they are classifiable in item 692.27.

As previously indicated, item 692.02 covers "Motor vehicles (except motorcycles) for the transport of persons or articles: * * * Automobile trucks," while item 692.27 covers "Chassis, bodies (including cabs), and parts of the foregoing motor vehicles: * * * Other." From this, plaintiff contends that even if the trailers here involved are imported separately and apart from their tractors, they are still considered by headnote 1(b) to be "parts of the foregoing motor vehicles," and as such classifiable under item 692.27 as other parts of motor vehicles.

Headnote 1(b), as the parties agree, incorporates the decision of this court in *Border Brokerage Company* v. *United States*, 42 Cust. Ct. 343, Abs. 62955 (1959). See P.R.D. 74–10, 8 Cust. Bull. 603, 604 (1974). In *Border Brokerage*, semitrailers, each of which was capable of carrying four automobiles, were held to be properly classifiable under paragraph 369(c) of the Tariff Act of 1930 as parts of automobile trucks. In use, the semitrailer was affixed to a gasoline-powered tractor by means of a "fifth wheel" or "kingpin." Once attached, the trailer and tractor were generally kept together to maintain identity of licensing, and for the reason that the runways or jump skids, running from the truck to the trailer, had to be a proper length to reach from the front upper deck of the trailer to the carrying rack above the cab of the truck. However, they could be separated and used with other cabs designed to pull such trailers. Further, the engine was housed in a tractor capable of being joined to the trailer and carrying a portion of the load.

Pursuant to safety regulations of the Interstate Commerce Commission, the trailers were equipped with airbrakes so that if the kingpin assembly failed, and the trailer broke loose, the brakes would lock and bring the trailer to a standstill. Air lines for the brakes, and electric lines for the various signal lights, were respectively hose and wire connections which ran from the tractor to the trailer. They were so integrated that they operated as and when the driver of the cab applied the brake or foot pedal.

Based on these facts, the court concluded that the trailers in question were parts of automobile trucks for the reasons that the trailers were dedicated to a specific use in conjunction with the motor cabs and the record established that the joining of a trailer to the cab

created a single integrated unit with a common braking system and a common electric system operated simultaneously by the driver of the cab.

With these considerations in mind, it is apparent that not all non-self-propelled trailers are included within headnote 1(b). Indeed, the language of that headnote specifically refers only to automobile truck tractors imported with their trailers and states that if such trailers are imported separately they are classifiable under item 692.27 as other parts of motor vehicles. Particularly against the background of *Border Brokerage*, it seems evident that the headnote is directed to separately imported trailers which function in such manner as to create single, integrated automobile truck tractors when joined and hence are to be considered parts of motor vehicles for the purpose of TSUS. In the present case, by contrast, plaintiff has presented no evidence whatever that the involved trailers function as a single integrated unit when connected to the truck tractors, let alone any other evidence to establish that the trailers constitute parts of automobile truck tractors.

In the last analysis, plaintiff's position in effect is that all non-self-propelled trailers are motor vehicles under TSUS irrespective of whether or not they function as a single integrated unit when connected to the truck tractors. But such a position is at odds not only with the common meaning of motor vehicle but also with headnote 1(b). What is more, such an interpretation would render nugatory the words "including trailers" in item 692.60, which item (as previously indicated) covers "Vehicles (*including trailers*), not self-propelled, * * *." [Italic added.]

To support its position that all non-self-propelled trailers are motor vehicles under TSUS, plaintiff relies on the following abstract of a Bureau of Customs letter dated October 7, 1968 (T.D. 68–284(16), 2 Cust. Bull. 631):

> Leaf springs measuring 26 inches in length from eye to eye which are used in the suspension systems of highway trailers, mobile homes, and in vehicles used in guided tours, movie studios, and other off-the-highway areas classifiable under the provision for springs and leaves for springs, of base metal: Suitable for motor vehicle suspension in item 652.84, TSUS.

Assuming that this Bureau letter may be construed as covering all trailers, it is in error. And of course it is in no way binding on the court. *Ditbro Pearl Co., Inc.* v. *United States*, 62 CCPA 95, C.A.D. 1152, 515 F. 2d 1157 (1975); *The Ferriswheel* v. *United States*, 84 Cust. Ct. —, —, C.D. 4844 (1980) (slip op. at 14).

For the foregoing reasons, the classification of the importations by Customs under item 652.88 is affirmed and the action is dismissed.

Decisions of the United States Customs Court

Customs Rules Decision

(C.D.R. 80-7)

SOUTHWEST FLORIDA WINTER VEGETABLE GROWERS ASSOCIATION, ET AL., PLAINTIFFS, *v.* UNITED STATES, DEFENDANT, and WEST MEXICO VEGETABLE DISTRIBUTORS ASSOCIATION, INTERVENOR

Order on Plaintiffs' Motion To Release Documents Claimed To Be Privileged and on Defendant's Cross-Motion for Discovery Order

Court No. 80-4-00577

(Dated July 2, 1980)

MALETZ, Judge:

I. The court having considered:

(a) The letter of May 13, 1980 from C. Christopher Parlin, Acting Deputy Assistant Counsel of the Department of Commerce, to the clerk of the court, transmitting a portion of the administrative record in the case and stating in part:

> *Volume 11 contains national security information* and other privileged information. This volume should be safeguarded accordingly. [Emphasis in original.]

(b) Plaintiffs' motion to release documents claimed to be privileged; and

(c) Defendant's response to plaintiffs' motion and defendant's cross-motion that plaintiffs' motion be treated as a request for production of documents.

II. The court has determined that the quoted portion of the foregoing letter is an apparent claim of privilege. However, in no respect does it comply with the requirements for a proper claim of privilege.

III. It is therefore ordered that defendant shall file with this court, no later than July 31, 1980, a proper claim of privilege with respect to those documents, if any, contained in volume 11 of the administrative

record for which defendant asserts a claim of privilege. Such claim of privilege shall include:

(a) An affidavit from the head of the applicable department or agency attesting that he has personally reviewed each of the documents for which a claim of privilege is made;

(b) A specific designation and description of each document for which a claim of privilege is made; and

(c) A demonstration of the precise and certain reasons for preserving the confidentiality of each document for which privilege is claimed.

IV. It is further ordered that defendant's cross-motion to treat plaintiffs' motion as a request for discovery be denied.

Decisions of the United States Customs Court

Abstracts

Abstracted Reappraisement Decisions

DEPARTMENT OF THE TREASURY, *July 7, 1980.*

The following abstracts of decisions of the United States Customs Court at New York are published for the information and guidance of officers of the customs and others concerned. Although the decisions are not of sufficient general interest to print in full, the summary herein given will be of assistance to customs officials in easily locating cases and tracing important facts.

ROBERT E. CHASEN,
Commissioner of Customs.

DECISION NUMBER	JUDGE & DATE OF DECISION	PLAINTIFF	COURT NO.	ASSESSED	HELD	BASIS	PORT OF ENTRY AND MERCHANDISE
				Par. or Item No. and Rate	Par. or Item No. and Rate		
P80/108	Maletz, J. July 3, 1980	Shayne Knitwear, Inc.	76-9-02154	Item 382.58 37.5¢ per lb. +20% (blouses and pants) Item 791.75 6% (jackets)	Item 791.75 6% Dutiable as entireties on basis of export value; said value is invoice unit price	J. C. Penney Purchasing Corporation v. U.S. (C.D. 4671)	New York Ladies 3-piece suits; entireties

DECISION NUMBER	JUDGE & DATE OF DECISION	PLAINTIFF	COURT NO.	ASSESSED	HELD	BASIS	PORT OF ENTRY AND MERCHANDISE
				Par. or Item No. and Rate	Par. or Item No. and Rate		
P80/109	Maletz, J. July 3, 1980	Shayne Knitwear, Inc.	76-9-02157	Item 382.78 25¢ per lb. +32.5% (blouses and pants) Item 791.75 6% (jackets)	Item 791.75 6% Dutiable as entireties on basis of export value; said value is invoice unit price	J. C. Penney Purchasing Corporation v. U.S. (C.D. 4671)	New York Ladies 3-piece suits; entireties
P80/110	Maletz, J. July 3, 1980	Shayne Knitwear, Inc.	76-9-02169	Item 772.30 12.5% (jackets and pants) Item 382.58 37.5¢ per lb. +20% (vests) Item 382.78 25¢ per lb. +32.5% (shirts)	Item 792.30 12.5% Dutiable as entireties on basis of export value; said value is invoice unit price	J. C. Penney Purchasing Corporation v. U.S. (C.D. 4671)	New York Ladies sets; entireties
P80/111	Boe, J. July 3, 1980.	Enerco, Inc.	79-10-01506	Item 475.35 0.25¢ per gal.	Not subject to duty under TSUS because it was never imported into U.S.	Hawaiian Independent Refinery v. U.S. (C.D. 4777)	Honolulu Light and heavy gas oil, testing both over and under 25° A.P.I. gravity, manufactured in Foreign Trade Subzone 9A, Honolulu, from crude oil having the status of nonprivileged foreign merchandise

P80/112	Boe, J. July 3, 1980	Hawaiian Refinery	Independent	79-4-00650	Item 475.05 0.125¢ per gal. Item 475.10 0.25¢ per gal.	Not subject to duty under TSUS because it was never imported into U.S.	Hawaiian Independent Refinery v. U.S. (C.D. 4777)	Honolulu Light and heavy gas oil, testing both over and under 25° A.P.I. gravity, manufactured in Foreign Trade Subzone 9A Honolulu, from crude oil having the status of non-privileged foreign merchandise

Decisions of the United States Customs Court

Abstracts

Abstracted Reappraisement Decisions

DECISION NUMBER	JUDGE & DATE OF DECISION	PLAINTIFF	COURT NO.	BASIS OF VALUATION	HELD VALUE	BASIS	PORT OF ENTRY AND MERCHANDISE
R80/218	Maletz, J. July 3, 1980	Petrie Stores Corp.	76-6-01458	Export value	Appraised values less only the 7% buying commissions included in said appraised values	Agreed statement of facts	New York Wearing apparel

Judgment of the U.S. Customs Court in Appealed Case

JULY 2, 1980

Appeal 79–27.—Hawaiian Motor Company *v.* United States.—BRUSH CUTTERS—HAND TOOLS WITH SELF-CONTAINED NON-ELECTRIC MOTOR—AGRICULTURAL OR HORTICULTURAL IMPLEMENTS—TSUS.—C.D. 4790 affirmed March 13, 1980 (C.A.D. 1241).

Recent Unpublished Customs Service Decisions

The following listing of recent administrative decisions issued by the Office of Regulations and Rulings, U.S. Customs Service, and not otherwise published, is published for the information of Customs officers and the importing community. Although the decisions are not of sufficient general interest to warrant publication as Treasury decisions, the listing describes the issues involved and is intended to aid Customs officers and concerned members of the public in identifying matters of interest which recently have been considered by the Office of Regulations and Rulings.

A copy of any decision included in this listing, identified by its date and file number, may be obtained in a form appropriate for public distribution upon written request to the Office of Regulations and Rulings, attention: Legal Reference Area, room 2404, U.S. Customs Service, 1301 Constitution Avenue NW., Washington, D.C. 20229. These copies will be made available at a cost to the requester of 10 cents per page. However, the Customs Service will waive this charge if the total number of pages copied is 10 or less.

Decisions listed in earlier issues of the CUSTOMS BULLETIN, through December 21, 1979, are available in microfiche format at a cost of $17.70 (15 cents per sheet of fiche). It is anticipated that additions to the microfiche will be made quarterly and subscriptions are available. Requests for the microfiche now available and for subscriptions should be directed to the Legal Reference Area. Subscribers will automatically receive updates as they are issued and will be billed accordingly.

Dated: July 14, 1980.

JOHN T. ROTH,
Acting Director,
Regulations and Research Division.

Date of decision	File No.	Issue
6-12-80	10456	Carrier control: Whether the use of a foreign-flag vessel as a stationary warehouse or storage vessel within U.S. territorial waters for the purpose of furnishing petroleum slops to an onshore refinery violates coastwise law

Date of decision	File No.	Issue
5-19-80	104627	Carrier control: Prohibition against transporting of passengers by foreign vessels between U.S. ports
6-12-80	104631	Vessel repair: Whether foreign repairs to a vessel boiler were necessitated by stress of weather or other casualty and thus remissible under 19 U.S.C. 1466(d)(1)
5-22-80	104651	Carrier control: Customs comments on H.R. 6899, a bill to revitalize maritime policy, reorganize certain Government agencies, and reform regulation of maritime affairs in the United States
6-20-80	104698	Carrier control: Whether the use of a foreign-flag vessel as a hotel violates coastwise law
6-16-80	711553	Country of origin marking: Whether enameling and rebaking ceramic tiles constitutes a substantial transformation so that the country of origin of the tiles for marking purposes would be where the tiles are enameled and finished
6-27-80	712995	Country of origin marking: Sunflower seeds and pumpkin seeds from Mexico which are processed in Canada
6-16-80	713089	Brokers: Whether special wording must be added to power-of-attorney form to authorize brokers to grant powers of attorney to other brokers
6-16-80	061231	Classification: Forklift attachments (657.25, 664.10)
3-31-80	061850	American selling price: Child's protective boot with a unit-molded, all-rubber bottom and a nylon, rubber, and plastic upper (700.60)
6-16-80	061894	American selling price: Athletic footwear (700.60)
6-16-80	062901	Classification: Learn-to-swim-suit (389.40)
5-21-80	062983	Classification: Fuel container of plastic (774.55)
6-24-80	064537	Classification: Disposable pocket lighter in wooden holder (756.04, 756.06)
6-16-80	064673	Classification: Windshield washer heater (657.30, 657.-35).
6-26-80	064675	Classification: Hand-painted and lettered gospel signs (652.75, 774.55)
6-16-80	064727	Classification: Christmas pins (740.30, 740.38)
6-20-80	064740	Classification: Pet litter scooper (256.90, 774.55)
6-27-80	064755	Classification: Love meter (737.95)
6-24-80	064907	Classification: Hair accessory of wood (750.22)
6-27-80	065183	Classification: Plastic keytops used on computer equipment (676.52, 685.90)
6-27-80	065205	Classification: Thong sandal in chief value of wood, but having rubber sole and polyester upper (700.80, 700.83)

International Trade Commission Notices

Investigations by the U.S. International Trade Commission

DEPARTMENT OF THE TREASURY

The appended notices relating to investigations by the U.S. International Trade Commission are published for the information of Customs officers and others concerned.

R. E. CHASEN,
Commissioner of Customs.

(603–TA–6)

STEEL JACKS FROM CANADA

Notice of Extension of Preliminary Investigation

Notice is hereby given that on July 3, 1980, the U.S. International Trade Commission voted to continue a preliminary investigation under section 603 of the Trade Act of 1974 (19 U.S.C. 2482) which had been instituted on April 23, 1980 (45 F.R. 29141). The Commission voted to continue the investigation to permit the Commission staff to negotiate a settlement with respect to possible violations of section 337 of the Tariff Act of 1930, as amended, which were the subject of the staff's preliminary investigation. The expected parties to the settlement, in addition to the Commission, will include J. C. Hallman Manufacturing Co., Ltd., Ontario, Canada; American Gage & Manufacturing Co., Wauseon, Ohio; A. H. Bottorff Co., St. Joseph, Mo.; and Bloomfield Manufacturing Co., Inc., Bloomfield, Ind.

The Commission voted to continue the preliminary investigation until a settlement is reached or until the Commission determines one cannot be reached within a reasonable time. The Commission directed the staff to report back to the Commission on the status of the investigation in 4 weeks.

By order of the Commission.

Issued: July 3, 1980.

KENNETH R. MASON,
Secretary.

In the Matter of CERTAIN FOOD SLICERS AND COMPONENTS THEREOF	Investigation No. 337-TA-76

Notice to all Parties

The date of the prehearing conference is changed from August 26 to September 2, 1980. The hearing will commence immediately after the prehearing conference.

During a telephone conference on July 1, 1980, which was held to discuss the place of taking depositions of witnesses by respondent Crest, Crest and complainant Prodyne Enterprises, Inc. indicated that they were close to a settlement agreement under which Crest would be licensed under the '817 patent. Prodyne intends to file a motion for summary determination. Under the proposed agreement, this motion would not be opposed by Crest. If the motion is granted by the Commission, Prodyne will ask the Commission to issue an exclusion order, rather than orders to cease and desist against the individual respondents.

JANET D. SAXON,
Administrative Law Judge.

Issued: July 7, 1980.

701-TA-42 through 701-TA-50 (Final)

TOMATO PRODUCTS FROM BELGIUM, DENMARK, THE FEDERAL REPUBLIC OF GERMANY, FRANCE, IRELAND, ITALY, LUXEMBOURG, THE NETHERLANDS, AND THE UNITED KINGDOM

Notice of Withdrawal of Notice and Clarification of Publication Date of Final Determination

AGENCY: U.S. International Trade Commission.

ACTION: Withdrawal of duplicate notice of Commission negative final determination in investigation Nos. 701-TA-42 through 701-TA-50 (final) appearing on June 18, 1980 (45 F.R. 41245) and clarification of date of publication of negative final determination as June 25, 1980 (45 F.R. 42899).

EFFECTIVE DATE: July 7, 1980.

FOR FURTHER INFORMATION CONTACT: Ms. Christine Bliss of the Office of the General Counsel, 202-523-0375.

SUPPLEMENTARY INFORMATION: On June 18, 1980 a notice of the Commission's negative final determination in Tomato Products

from the European Community, investigation Nos. 701–TA–50 (final) was published in the Federal Register. On June 25, 1980, due to a clerical error, the same notice was again published in the Federal Register. To correct this error the Commission is withdrawing the first notice of the final determination which appeared on June 18; 1980 (45 F.R. 41245) and declares the second notice which appeared on June 25, 1980 (45 F.R. 42899) to be the official notice and publication date of the final determination in the instant investigations.

By order of the Commission.

Issued: July 8, 1980.

KENNETH R. MASON,
Secretary.

In the Matter of CERTAIN FOOD SLICERS AND COMPONENTS THEREOF	Investigation No. 337–TA–76

Commission Determination and Order

On June 9, 1980, the U.S. International Trade Commission amended the complaint and notice of investigation in the above-captioned case to include allegations that claim 1 of U.S. Letters Patent No. 3,766,817 is infringed by respondent Crest Industries Corp., and that claims 6 and 7 are infringed by all of the respondents. Complainant Prodyne Enterprises, Inc. now seeks to have claims 6 and 7 of the '817 patent dismissed as to Crest. The presiding officer has certified and recommended to the Commission that motion No. 76–10 be granted to terminate claims 6 and 7 of the '817 patent as to respondent Crest pursuant to 19 CFR section 210.51.

The purpose of this Commission determination and order is to provide for the disposition of claims 6 and 7 of the '817 patent as to respondent Crest.

Determination

Having reviewed the record in this investigation, the Commission on July 8, 1980, determined—that complainant should be allowed to withdraw claims 6 and 7 of the '817 patent from the investigation, which are alleged to be infringed by respondent Crest's food slicer.

Order

Accordingly, it is hereby ordered—

(1) That motion No. 76–10 be granted to terminate the investigation with prejudice with respect to claims 6 and 7 of U.S. Letters Patent No. 3,766,817 as to respondent Crest Industries Corp.;

(2) That this order and determination be published in the Federal Register and served upon each party of record in this investigation and upon the U.S. Department of Health and Human Services, the U.S. Department of Justice, the Federal Trade Commission, and the Secretary of the Treasury; and

(3) That a copy of the memorandum opinion may be obtained from the Secretary of the Commission, 701 E Street NW., Washington, D.C. 20436.

By order of the Commission.

Issued: July 9, 1980.

KENNETH R. MASON,
Secretary.

In the Matter of CERTAIN SURVEYING DEVICES	Investigation No. 337-TA-68

Notice of Commission Determination and Order

Notice is hereby given that the Commission, upon consideration of the presiding officer's recommended determination and the record in this proceeding, investigation No. 337-TA-68, Certain Surveying Devices, has determined (Chairman Alberger and Commissioner Stern dissenting) that there is a violation of section 337 of the Tariff Act of 1930 (19 U.S.C. 1337) in the importation or sale of certain surveying devices which infringe the sole claim of U.S. Letters Patent 3,172,205, and has ordered that infringing surveying devices be excluded from entry into the United States for the term of the patent (until March 9, 1982), unless the importation is licensed by the patent owner. The Commission also ordered that the surveying devices ordered to be excluded from entry are entitled to entry into the United States under bond in the amount of 32 percent ad valorem during the period that this action is pending before the President.

The Commission's order is effective on the date of publication of this notice in the Federal Register. Any party wishing to petition for reconsideration must do so within 14 days of service of the Commission determination. Such petitions must be in accord with section 210.56 of the Commission rules (19 CFR 210.56). Any person adversely affected by a final Commission determination may appeal such determination to the U.S. Court of Customs and Patent Appeals.

Copies of the Commission's determination, order, and memorandum opinion (USITC publication 1085, July 1980) are available to the public during official working hours at the Office of the Secretary, U.S. International Trade Commission, 701 E Street NW., Washington, D.C. 20436; telephone 202-523-0161. Notice of the institution

of the Commission's investigation was published in the Federal Register of July 5, 1979 (44 F.R. 39315).

By order of the Commission.

Issued: July 7, 1980.

KENNETH R. MASON,
Secretary.

Investigation No. 337-TA-75

CERTAIN LARGE VIDEO MATRIX DISPLAY SYSTEMS, AND COMPONENTS THEREOF

Notice of Designation of Investigation as More Complicated

AGENCY: U.S. International Trade Commission.

ACTION: Designation of investigation No. 337-TA-75 as "more complicated" within the meaning of 19 U.S.C. 1337(b)(1) and 19 CFR 210.15, allowing 6 additional months for completion of the investigation.

NEW DATE FOR COMPLETION OF INVESTIGATION: June 19, 1981.

FOR FURTHER INFORMATION CONTACT: Michael B. Jennison, Esq., Office of the General Counsel, 202-523-0189.

SUPPLEMENTAL INFORMATION:

BACKGROUND

On November 20, 1979, the U.S. International Trade Commission instituted an investigation to determine whether there is, or there is reason to believe there is, a violation of section 337 of the Tariff Act 1930 (19 U.S.C. 1337) in the unlawful importation of certain large video matrix display systems and components thereof into the United States, or in their sale, because such large video matrix display systems are allegedly covered by the claims of U.S. Letters Patent Nos. 3,495,762, 3,941,926, 4,009,335, and 4,148,073, the effect or tendency of which is to destroy or substantially injure an industry, efficiently and economically operated, in the United States.

On May 21, 1980, respondent SSIH Equipment S.A. requested the Commission to designate the investigation "more complicated" within the meaning of 19 U.S.C. 1337(b)(1), allowing the Commission an additional 6 months in which to make its determination (motion docket No. 75-10). The Commission investigative attorney supported the motion and complainant Stewart-Warner Corp. opposed it. The

presiding officer recommended that the investigation be designated more complicated and certified the motion and accompanying papers to the Commission on June 9, 1980 (order No. 12).

AUTHORITY

Section 1337(b)(1) of title 19, United States Code, requires the Commission to "make its determination * * * at the earliest practicable time, but not later than 1 year (18 months in more complicated cases) after the date of publication of notice" in the Federal Register, in this case, December 19, 1980 (44 F.R. 75242). The Commission's Rules of Practice and Procedure provide that a "more complicated" investigation is "of an involved nature owing to the subject matter, difficulty in obtaining information, or large number of parties involved" (19 CFR 210.15). The display system at issue in this investigation is technologically highly sophisticated. The 35 or more patent claims at issue are accompanied by hundreds of pages of specifications and drawings. In addition to extensive discovery on the technical question, information on possible anticompetitive and predatory practices is being obtained from third parties in regard to respondent's affirmative defenses. The subject matter of the investigation is involved; obtaining information is difficult. The Commission therefore orders that this investigation be designated "more complicated."

Copies of any public documents in this investigation are available to the public during official working hours (8:45 a.m. to 5:15 p.m.) in the Office of the Secretary, U.S. International Trade Commission, 701 E Street NW., Washington, D.C. 20436; telephone 202-523-0161.

By order of the Commission.

Issued: June 27, 1980.

KENNETH R. MASON,
Secretary.

(19 CFR 207.46)

Investigation No. 731-TA-15 (Preliminary)

PIPES AND TUBES OF IRON OR STEEL FROM JAPAN

Notice of the Determination of the Commission After Reconsideration of Imports Provided For in Item 610.3205 of the Tariff Schedules of the United States Annotated (TSUSA) and of the Facts and Conclusions of Law Upon Which the Determination Is Based.

AGENCY: United States International Trade Commission.

ACTION: On the basis of the correctted record[1] developed in investi-

[1] The record is defined in sec. 207.2(j) of the Commission's Rules of Practice and Procedure (19 CFR 207.2(j)).

gation No. 731–TA–15 (preliminary), the Commission determines,[2] pursuant to section 733 of the Tariff Act of 1930, that there is no reasonable indication that an industry in the United States is materially injured, or threatened with material injury, or the establishment of an industry in the United States is materially retarded, by reason of the importation from Japan of welded pipes of steel, provided for in item 610.3205 of the TSUSA, which are allegedly sold or likely to be sold at less than fair value.

FOR FURTHER INFORMATION CONTACT: Mr. William E. Fry, Acting Director of Investigations, U.S. International Trade Commission; telephone 202–523–0242.

SUPPLEMENTARY INFORMATION: On February 28, 1980, the Commission and the Department of Commerce each received a petition from Babcock & Wilcox Co., Beaver Falls, Pa., alleging that the class or kind of merchandise described in the petition is being or is likely to be sold in the United States at less than fair value. The Commission instituted preliminary investigation No. 731–TA–15 under section 733(a) of the Tariff Act of 1930 to determine whether there is a reasonable indication that an industry is materially injured, or is threatened with material injury, or the establishment of an industry in the United States is materially retarded, by reason of imports from Japan of welded pipes and tubes of iron or steel provided for in TSUSA item 610.3205 and seamless pipes and tubes of iron or steel, of circular cross section, provided for in TSUSA items 610.4600, 610.4920, 610.5210, 610.5215, or 610.5270.[3] The statute directed that the Commission make its determination within 45 days of its receipt of the petition, or in this case by April 14, 1980.

On April 9, 1980, the Commission determined on the basis of the record of its investigation (1) that there is a reasonable indication that an industry in the United States is materially injured by reason of the importation from Japan of welded pipes of steel, provided for in TSUSA item 610.3205, which are allegedly sold or likely to be sold at less than fair value; and (2) that there is no reasonable indication that an industry in the United States is materially injured or threatened with material injury, or the establishment of an industry in the United States is materially retarded, by reason of the importation

[2] Commissioners Moore and Bedell changed their affirmative votes of Apr. 9, 1980, with regard to item 610.3205 to negative votes on the basis of corrected import data. Chairman Alberger and Commissioner Stern voted in the negative with regard to item 610.3205 on Apr. 9, 1980, and the corrected data does no alter their original votes. Vice Chairman Calhoun voted affirmative on Apr. 9, 1980, and did not change his vote because the corrected data did not change his views.

[3] On Mar. 18, 1980, the Department of Commerce issued its notice of institution of investigation with respect to the subject articles. However, Commerce did not initiate an investigation with respect to seamless pipes and tubes of iron or steel, of circular cross section, provided for in TSUSA item 610.4600. Thus, such articles were effectively excluded from the scope of the Commission's investigation, since there was no finding of sales at less than fair value on these articles.

from Japan of seamless pipes and tubes of steel, of circular cross section, provided for in TSUSA items 610.4920, 610.5210, 610.5215, or 610.5270, which are allegedly sold or likely to be sold at less than fair value.

On April 25, 1980, the Commission received a request that it reconsider its determination in investigation No. 731–TA–15 on the basis that the data concerning the imports under item 610.3205 appeared to be in error for the years 1977–79. In response to the request, the Commission contacted all the respondents to the Commission's importers' questionnaire in investigation No. 731–TA–15. All but one of those firms indicated that the data they reported had been checked and verified, and that any changes were insubstantial. The remaining firm made revisions in the data reported which changed the aggregate import data compiled for item 610.3205 substantially. The Commission's Office of Investigations audited the underlying import records of the firm reporting the substantial changes, and verified that the original data submitted were in error.

On June 16, 1980, the Commission ordered that its determination in investigation No. 731–TA–15 be reopened to reconsider the corrected import statistics concerning Japanese welded pipe classified under item 610.3205. On June 24, 1980, Commissioners Moore and Bedell changed their determination with regard to TSUSA item 610.3205 from an affirmative determination to a negative determination. The changing of these votes had the effect of changing the Commission's determination on TSUSA item 610.3205 from affirmative to negative.

STATEMENT OF REASONS OF COMMISSIONERS MOORE AND BEDELL

On the basis of corrected information made available to the Commission, we determine—

> That there is no reasonable indication that an industry in the United States is materially injured or is threatened with material injury, or the establishment of an industry in the United States is materially retarded, by reason of imports from Japan of welded pipes of steel, provided for in item 610.3205 of the Tariff Schedules of the United States Annotated (TSUSA), allegedly sold or likely to be sold at less than fair va ue.

On April 9, 1980, we found that the information supplied to the Commission in response to questionnaires indicated that "U.S. imports of the subject welded pipes from Japan had almost doubled from 1978 from their 1977 level, and in 1979, they were 68 percent higher than in 1977." (45 F.R. 27581, Apr. 23, 1980.) The questionnaire responses upon which these calculations were based were in error. The corrected data, which have been verified by the Commission's staff, indicate that imports of the subject pipes increased by

45 percent between 1977 and 1978 but were 3.5 percent lower in 1979 than in 1977. The substantial percentage increases from 1977 to 1979 upon which our affirmative determination was primarily based did not, in fact, exist, and we have changed our determination accordingly.

VIEWS OF CHAIRMAN ALBERGER

On the basis of the corrected record in this portion of the original investigation, I reaffirm my previous negative vote with respect to welded carbon steel boiler tubes. (45 F.R. 27583, Apr. 23, 1980.)

VIEWS OF VICE CHAIRMAN MICHAEL CALHOUN

I reaffirm my original vote in the preliminary case because the corrected data does not change my views (45 F.R. 27586, Apr. 23, 1980.)

VIEWS OF COMMISSIONER PAULA STERN

The corrected data now available on welded carbon steel boiler tubes only reinforces my original negative determination with respect to the industry in investigation No. 731–TA–15 (preliminary) (45 F.R. 27584, Apr. 23, 1980).

By order of the Commission.

Issued: July 7, 1980.

KENNETH R. MASON,
Secretary.

731–TA–7 (Final)

CERTAIN ELECTRIC MOTORS FROM JAPAN

Notice of Institution of Final Antidumping Duty Investigation and Hearing

AGENCY: U.S. International Trade Commission.

ACTION: Institution of final antidumping duty investigation to determine whether an industry in the United States is materially injured, or is threatened with material injury, or the establishment of an industry in the United States is materially retarded, by reason of imports of certain electric motors from Japan, upon which the administering authority has made a tentative affirmative preliminary determination are being, or are likely to be, sold in the United States at less than fair value.

EFFECTIVE DATE: June 17, 1980.

FOR FURTHER INFORMATION CONTACT: Mr. Bruce Cates of the Commission's staff, 202-523-0369.

SUPPLEMENTARY INFORMATION:

BACKGROUND

A petition was received in satisfactory form on August 27, 1979, from the motor and generator section of the National Electrical Manufacturers Association, alleging that certain electric motors imported from Japan are being sold at prices far below fair value and that, as a result, an industry in the United States is being materially injured and is threatened with material injury. These sales are alleged to constitute sales at less than fair value pursuant to section 731 of the Tariff Act of 1930 as amended (Public Law No. 96-39, 93 Stat. 162), hereinafter the act. Notice of the institution of the Commission's preliminary investigation and of a public conference to be held in connection therewith was duly given by posting copies of the notice in the Office of the Secretary, U.S. International Trade Commission, Washington, D.C., and at the Commission's New York office, and by publishing the notice in the Federal Register of January 14, 1980 (45 F.R. 2715). A public conference was held in Washington, D.C. on January 30, 1980.

On February 14, 1980, the Commission determined:

> That there is a reasonable indication that an industry in the United States is materially injured by reason of the importation (from Japan) of AC, polyphase electric motors, over 5 horsepower but not over 500 horsepower, provided for in item 682.41 through 682.50 of the Tariff Schedules of the United States, which are allegedly sold at less than fair value.

Notice of that determination was published in the Federal Register of February 22, 1980. (45 F.R. 11939). On May 5, 1980, a notice of postponement of preliminary determination was published by the Department of Commerce in the Federal Register (45 F.R. 29619). The postponement was based on a determination that the case is "extraordinarily complicated" and extended the deadline for the preliminary determination to June 16, 1980.

On June 16, 1980, the Commerce Department made a tentative, affirmative, less-than-fair-value determination, but no final determination with regard to certain electric motors from Japan. On June 17, 1980, the Commerce Department granted a 60-day extension of the deadline for their final determination. Therefore, the final determination which was due on September 2, 1980, will be made not later than October 29, 1980.

AUTHORITY

The provisions of the Trade Agreements Act of 1979 (Public Law 96–39, 93 Stat. 144 (July 26, 1979) (19 U.S.C. 1671 et seq.)) repealed the Antidumping Act, 1921, and replaced it with subtitle B of title VII of the Tariff Act of 1930 (19 U.S.C. 1673)(hereinafter the Tariff Act) effective on January 1, 1980. The antidumping statutes, as amended by the Trade Agreements Act of 1979, require that the Commission complete this investigation before the 45th day after which the administering authority (Commerce) makes its final affirmative determination. Commerce's final determination is due on October 29, 1980, and therefore the statutory deadline for completion of the Commission's investigation is December 12, 1980. Consequently, effective as of June 17, 1980, the Commission is instituting antidumping investigation No. 731–TA–7 (final) pursuant to section 735(b) of the Tariff Act, as added by title I of the Trade Agreements Act of 1979. This investigation will be conducted according to the provisions of part 207 of the Commission's Rules of Practice and Procedure (19 CFR 207, 44 F.R. 76457), subpart C thereof.

SCOPE

The present investigation is being titled "Certain Electric Motors from Japan" to conform with the title used by the Department of Commerce in its investigation. For the purposes of this investigation, the term "certain electric motors" means polyphase AC electric motors, other than submersible well pump motors, over 5 horsepower but not over 500 horsepower, provided for in item Nos. 682.4130, 682.4200, 682.4545, 682.4600, 682.5010, and 682.5030 of the Tariff Schedules of the United States Annotated. The scope of this investigation has been narrowed to exclude submersible well pump motors as a consequence of the exclusion of such merchandise from the investigation by the Commerce Department.

WRITTEN SUBMISSIONS

Any person may submit to the Commission on or before the prehearing statement due date specified below a written statement of information pertinent to the subject of this investigation. A signed original and 19 true copies of each submission must be filed at the Office of the Secretary, U.S. International Trade Commission Building, 701 E Street NW., Washington, D.C.

Any submission of business information for which confidential treatment is desired shall be submitted separately from other documents. The envelope and all pages of such submissions must be clearly labeled "Confidential Business Information." Confidential submissions and requests for confidential treatment must conform with

the requirements of section 201.6 of the Commission's Rules of Practice and Procedure (19 CFR 201.6).

All written submissions, except for confidential business data, will be available for inspection by interested persons at the Office of the Secretary in Washington, D.C., and at the Commission's New York Office, 6 World Trade Center, New York, N.Y. 10048.

A staff report containing preliminary findings of fact will be available to all interested parties on October 31, 1980.

HEARING

The Commission will hold a public hearing in connection with the investigation on November 20, 1980. The proceeding will be conducted in the hearing room of the U.S. International Trade Commission Building, 701 E Street NW., Washington, D.C. 20436, and will begin at 10 a.m., e.s.t. Parties desiring to appear at the hearing should notify the Office of the Secretary not later than 5 business days prior to the date of the hearing, and attend the prehearing conference at 10 a.m. on November 14, 1980, in room 117 at the Commission. In addition, all hearing participants must file written prehearing statements in conformity with section 207.22 of the Commission's Rules of Practice and Procedure (19 CFR 207.22) on or before November 14, 1980.

For further information concerning the conduct of the investigation, hearing procedures, and rules of general application, consult the Commission's Rules of Practice and Procedure, part 207, subpart C (19 CFR 207), and part 201, subparts A through E (19 CFR 201). This notice is published pursuant to section 207.20 of the Commission's Rules of Practice and Procedure (19 CFR 207.20, 44 F.R. 76458).

By order of the Commission.

Issued: July 3, 1980.

KENNETH R. MASON,
Secretary.

Index

U.S. Customs Service

Treasury decisions:
- Bonds:
  - Carriers ..... T. D. No.
  - Consolidated Aircraft 80-187
- Cotton Textile Products—Restriction on Entry: 80-188
  - Macau 80-189
  - Poland 80-190
- Cotton and Manmade Fiber Textile Products—Restriction on Entry—India 80-191
- Manmade Fiber Textile Products—Restriction on Entry—Columbia 80-186
- Synopsis of drawback decisions 80-192
  - Computer systems 80-192-A
  - Magazines 80-192-B, 80-192-C, 80-192-E, 80-192-G, 80-192-N, 80-192-T, 80-192-W, 80-192-Y, 80-192-Z
  - Projectors, binoculars, language masters 80-192-E
  - Additives for lubricating oils 80-192-H
  - Gears, turbines, and generators 80-192-I
  - Television receivers 80-192-J
  - Polyester yarn 80-192-K, 80-192-L
  - Orange juice, reconstituted 80-192-M
  - Waste systems, solid 80-192-O
  - Transmission parts 80-192-P
  - Polyvinyl products 80-192-Q
  - Buses 80-192-R
  - Ball bearings and parts 80-192-S
  - Mining machinery 80-192-U
  - Televisions, stereos, microwave ovens 80-192-V
  - Tanks, steel storage 80-192-X

Customs Court

Advisory opinions; Customs Court, C.D. 4861
Bureau of Customs letter, not binding on court, C.D. 4862
Chassis bodies (including cabs), and parts of the foregoing motor vehicles: * * *
  Other, C.D. 4862
Common meaning; motor vehicle, C.D. 4862
Construction:
  National Traffic and Motor Vehicle Safety Act of 1966, C.D. 4862
  Tariff Schedules of the United States:

General Headnotes and Rules of Interpretation, rule 10(b), C.D. 4862
Item 652.84, C.D. 4862
Item 652.88, C.D. 4862
Item 692.02, C.D. 4862
Item 692.27, C.D. 4862
Item 692.60, C.D. 4862
Schedule 6, part 6, subpart B, headnote 1(b), C.D. 4862
U.S. Code:
Title 15, sec. 1391(3), C.D. 4862
Title 28:
Sec. 1346, C.D. 4861
Sec. 1582, C.D. 4861
Cross-motion for discovery order; privileged documents, motion to release, C.R.D. 80-7
Customs Court:
Advisory opinions, C.D. 4861
Jurisdiction, C.D. 4861
Jurisdiction; tort actions, C.D. 4861
Definition:
Automobile, C.D. 4862
Motor vehicle, C.D. 4862
Discovery order, cross-motion for; motion to release privileged documents, C.R.D. 80-7
Failure to state a claim, C.D. 4861
Judgment in appealed case (p. —); Appeal 79-27—Brush cutters; hand tools with self-contained non-electric motor; agricultural or horticultural implements: TSUS
Jurisdiction:
Customs Court, C.D. 4861
Lack of; motion to dismiss complaint, C.D. 4861
Leaf springs of base metal; other springs and leaves for springs, of base metal, C.D. 4862
Lexicographic sources:
Funk & Wagnalls New Standard Dictionary of the English Language (Unabridged, 1956), C.D. 4862
The Harper Encyclopedia of Science, vol. III (1st ed. 1963), p. 806, C.D. 4862
McGraw-Hill Dictionary of Scientific and Technical Terms (1974), C.D. 4862
Webster's Third New International Dictionary of the English Language (Unabridged, 1963), C.D. 4862
Merchandise, non-existent; mootness, C.D. 4861
Mootness; merchandise, non-existent, C.D. 4861
Motion:
To dismiss complaint; jurisdiction, lack of, C.D. 4861
To release privileged documents; discovery order, cross-motion for, C.R.D. 80-7
Motor:
Vehicle; common meaning, C.D. 4862
Vehicles * * * for the transport of persons or articles: * * * automobile trucks, C.D. 4862
Opinions, advisory, C.D. 4861
Other springs and leaves for springs, of base metal; leaf springs of base metal, C.D. 4862

Privilege, claim of, C.R.D. 80–7
Privileged documents, motion to release; cross-motion for discovery order, C.R.D. 80–7
Springs suitable for motor vehicle suspension, C.D. 4862
Suitability for use; Tariff Schedules of the United States, C.D. 4862
Tariff Schedules of the United States; suitability for use, C.D. 4862
Tort actions; Customs Court jurisdiction, C.D. 4861
Treatises and related publications; Sturm, Customs Law and Administration (1978), sec. 53.3, p. 501, C.D. 4862
Vehicles (including trailers), not self-propelled, not specially provided for, and parts thereof, C.D. 4862
Words and phrases:
    Automobile, C.D. 4862
    Including trailers, C.D. 4862
    Motor vehicle, C.D. 4862
    Vehicle, C.D. 4862

U.S. GOVERNMENT PRINTING OFFICE : 1980 O - 322-278

324-900 Item 950-D T1.11/3:14/32
Copies 377 & contin
AUG 7 1980

Customs Bulletin

Regulations, Rulings, Decisions, and Notices concerning Customs and related matters

and Decisions

of the United States Court of Customs and Patent Appeals and the United States Customs Court

9247

Vol. 14 | Aug. 6, 1980 | No. 32

This issue contains

T.D. 80–193
General Notice
C.A.D. 1250
C.S.D. 80–101 through 80–125
International Trade Commission Notice

THE DEPARTMENT OF THE TREASURY
U.S. Customs Service

NOTICE

The abstracts, rulings, and notices which are issued weekly by the U.S. Customs Service are subject to correction for typographical or other printing errors. Users may notify the U.S. Customs Service, Logistics Management Division, Washington, D.C. 20229, of any such errors in order that corrections may be made before the bound volumes are published.

For sale by the Superintendent of Documents, U.S. Government Printing Office, Washington, D.C. 20402. Price: $2.25 (single copy domestic); $2.85 (single copy foreign). Subscription price: $85.00 a year domestic; $106.25 a year foreign.

U.S. Customs Service

Treasury Decisions

(T.D. 80–193)

Manmade Fiber Textile Products—Restriction on Entry

Restriction on entry of manmade fiber textile products manufactured or produced in Singapore

There is published below a directive of June 27, 1980, received by the Commissioner of Customs from the acting chairman, Committee for the Implementation of Textile Agreements, concerning restriction on entry of manmade fiber textile products in category 613 manufactured or produced in Singapore.

This directive amends, but does not cancel, that committee's directive of December 14, 1979 (T.D. 80–50).

This directive was published in the Federal Register on July 2, 1980 (45 F.R. 44978), by the committee.

(QUO-2-1)

Dated: July 16, 1980.

WILLIAM D. SLYNE
(For Chester R. Krayton,
Director, Duty Assessment Division).

U.S. DEPARTMENT OF COMMERCE,
INTERNATIONAL TRADE ADMINISTRATION,
Washington, D.C., June 27, 1980.

Committee for the Implementation of Textile Agreements

COMMISSIONER OF CUSTOMS,
Department of the Treasury,
Washington, D.C.

DEAR MR. COMMISSIONER: This directive amends, but does not cancel, the directive issued to you on December 14, 1979 by the

chairman, Committee for the Implementation of Textile Agreements, concerning imports into the United States of certain cotton, wool, and manmade fiber textile products, produced or manufactured in Singapore.

Under the terms of the Arrangement Regarding International Trade in Textiles done at Geneva on December 20, 1973, as extended on December 15, 1977; pursuant to the Bilateral Cotton, Wool and Man-Made Fiber Textile Agreement of September 21 and 22, 1978, as amended; and in accordance with the provisions of Executive Order 11651 of March 3, 1972, as amended by Executive Order 11951 of January 6, 1977, you are directed to prohibit, effective on July 7, 1980, and for the 12-month period which began on January 1, 1980, and extends through December 31, 1980, entry into the United States for consumption and withdrawal from warehouse for consumption of manmade fiber textile products in category 613, produced or manufactured in Singapore, in excess of 5 million square yards.[1]

This action taken with respect to the Government of Singapore and with respect to imports of manmade fiber textile products from Singapore has been determined by the Committee for the Implementation of Textile Agreements to involve foreign affairs functions of the United States. Therefore, the directions to the Commissioner of Customs, which are necessary for the implementation of such actions, fall within the foreign affairs exception to the rulemaking provision of 5 U.S.C. 553. This letter will be published in the Federal Register.

Sincerely,

ARTHUR GAREL,
Acting Chairman, Committee for the Implementation of Textile Agreements.

---

[1] The level of restraint has not been adjusted to reflect any imports after Dec. 31, 1979.

U.S. Customs Service

General Notice

(19 CFR Part 177)

Administrative Rulings

Proposed change in the Customs regulations pertaining to the issuance of administrative rulings concerning the tariff classification of merchandise

AGENCY: U.S. Customs Service, Department of the Treasury.

ACTION: Proposed rule.

SUMMARY: This notice proposes to amend the Customs Regulations to authorize the Regional Commissioner of Customs, region II, New York (Regional Commissioner), to issue selected tariff classification rulings. The rulings would be limited to requests for the tariff classification of merchandise before the transaction is considered by Customs by reason of arrival or entry of the merchandise. A right of appeal to Customs Headquarters would be authorized and the rulings made in the New York region would be closely monitored by Customs Headquarters for consistency with law, regulation, and precedent cases.

DATES: Comments must be received on or before (30 days from the date of publication in the Federal Register).

ADDRESS: Comments (preferably in triplicate) may be addressed to the Commissioner of Customs, attention: Regulations and Research Division, U.S. Customs Service, 1301 Constitution Avenue NW., room 2426, Washington, D.C. 20229.

FOR FURTHER INFORMATION CONTACT: Salvatore E. Caramagno, Director, Classification and Value Division, Office of Regulations and Rulings, U.S. Customs Service, 1301 Constitution Avenue NW., Washington, D.C. 20229; 202-566-5868.

BACKGROUND

To be certain of the duty treatment merchandise will receive when imported into the United States, importers usually request binding rulings from Customs before the import transaction relating to the

merchandise takes place. Currently, such rulings are issued by the Office of Regulations and Rulings (ORR) at Customs Headquarters. While some of the requests require immediate replies in order to be meaningful, others do not require such quick responses. In the absence of advice from the requester, it is usually not possible for ORR to make a determination with respect to the urgency of any particular ruling request. In addition, some of these requests are quite simple, do not involve significant duty, or have any other complicating factors. On the other hand, a small percentage (estimated at approximately 20 to 30 percent) of the requests are either very complex or have other issues involved which make the decisions sensitive (i.e., policy considerations affecting U.S. employment or balance of trade, etc.).

Because of increases in ruling requests and decreases in staffing, it has become apparent in recent months that some method must be found to expedite the ruling process. A variety of management improvements have been made in ORR, but despite all these changes, it still takes an average of 100 to 110 days to process a response to an importer. A processing time of 100 to 110 days to issue a response in noncomplex or nonsensitive cases is not acceptable if Customs intends to provide a meaningful service to the international trade community.

Accordingly, a detailed examination of the ruling process was undertaken for the purpose of improving the system. Pursuant to the examination, it was concluded that present procedures should be modified to allow for a more active role by the National Import Specialists (NIS) located in New York, N.Y.

The NIS are a relatively small, skilled group of Customs professionals. They are tariff classification technicians and, unlike import specialists located in other Customs regions, are responsible for very narrow areas of the Tariff Schedules of the United States (19 U.S.C. 1202) known as product lines, and are conversant with the judicial and administrative precedent which relates to these product lines.

Inasmuch as the NIS are centrally located and are organizationally under the same person, uniformity of decisions would be easily attained and the quality of rulings would be maintained.

The authority to issue selected rulings would be vested in the Regional Commissioner and delegated to the Assistant Area Director, Classification and Value Division, New York Seaport and region, under whose supervision the NIS are organized.

The NIS would issue ruling letters regarding prospective Customs transactions only. They would not be allowed to prepare final decisions on "Internal Advice" requests, "Further Review of Protest," requests, requests for "Change of Practice," and "Petitions under section 516, Tariff Act of 1930, as amended (19 U.S.C. 1516)." Also, they would not be allowed to prepare final rulings in "difference" cases.

Requests for tariff classification rulings would be forwarded to the Regional Commissioner of Customs, New York, N.Y. Subject to guidelines provided by Customs Headquarters, the Regional Commissioner or his designee, would determine whether the requested ruling would be issued from the region or whether, due to its complex or sensitive nature, the matter would be referred to headquarters. In addition, those members of the public who believe that their classification requests present complex or important issues may make their requests directly to headquarters.

Customs Headquarters would retain authority to issue rulings in all matters brought to its attention and to independently review all ruling letters issued by the Regional Commissioner or his designee. If the importer or other person to whom a ruling letter is issued disagrees with the tariff classification he could, within 30 days of the date of issuance of the ruling letter, petition the Director, Classification and Value Division, Customs Headquarters, for review of the ruling.

If an actual importation of merchandise occurs after receipt of a request for a ruling but before the issuance of the ruling, the NIS would handle the matter in the same way it is currently handled by Headquarters (i.e., the party seeking the ruling must advise Customs of the fact an actual importation has occurred and assuming no material change in the facts the request would continue to be treated by Customs as a prospective ruling request).

The rulings signed by the Regional Commissioner or his designee would be binding on Customs. They would not be withdrawn retroactively to the detriment of the party on whose behalf the ruling was requested. Further, if published, those rulings would create established and uniform practices.

PROPOSED AMENDMENTS

It is proposed to amend the sections of part 177, Customs Regulations (19 CFR, part 177), affected by this change to read as follows:

1. It is proposed to amend section 177.0 to read as follows:

§ 177.0 Scope

This part relates to the issuance of rulings to importers and other interested persons by the Headquarters Office of the U.S. Customs Service or the Regional Commissioner of Customs, region II, or his designee. It describes the situations in which a ruling may be requested, the procedures to be followed in requesting a ruling, the conditions under which a ruling will be issued, the effect of a ruling when it is issued, and the publication of rulings in the CUSTOMS BULLETIN. The rulings issued under the provisions of this part will usually be prospective in application and, consequently, will usually not relate to specific matters or situa-

tions presently or previously under consideration by any Customs Service field office. Accordingly, the rulings requested under the provisions of this part should be distinguished from the administrative rulings, determinations, or decisions which may be requested under procedures set forth elsewhere in this chapter, including, but not limited to, those set forth in part 12 (relating to submissions of proof of admissibility of articles detained under section 307 of the Tariff Act of 1930 (19 U.S.C. 1307)), part 103 (relating to disclosure of information in Customs files), part 133 (relating to disputed claims of piratical copying of copyrighted matter), subpart C of part 152 (relating to determinations concerning the dutiable value of merchandise by Customs field officers), part 153 (relating to enforcement of the Antidumping Act, 1921, as amended), part 159 (insofar as it relates to countervailing duties), part 171 (relating to fines, penalties, and forfeitures), part 172 (relating to liquidated damages), part 174 (relating to protests), and part 175 (relating to petitions filed by American manufacturers, producers, or wholesalers pursuant to section 516 of the Tariff Act of 1930, as amended). Nor do the provisions of part 177 apply to requests for decisions of an operational, administrative, or investigative nature which are properly within the cognizance of a Customs Headquarters Office other than the Office of Regulations and Rulings.

2. It is proposed to amend section 177,1(a)(1) to read as follows:

§ 177.1 General ruling practice and definitions.

(a) *The issuance of rulings generally*—(1) *Prospective transactions.*—It is in the interest of the sound administration of the Customs and related laws that persons engaging in any transaction affected by those laws fully understand the consequences of that transaction prior to its consumation. For this reason, the Headquarters Office of the U.S. Customs Service or the Regional Commissioner, region II, or his designee, will give full and careful consideration to written requests from importers or other interested parties for rulings or information setting forth, with respect to a specifically described Customs transaction, a definitive interpretation of applicable law, or other appropriate information. Generally, a ruling may be requested under the provisions of this part only with respect to prospective transactions—that is, transactions which are not already pending before a Customs Service office by reason of arrival, entry, or otherwise.

* * * * * * *

It is proposed to amend section 177.1(b) to read as follows:

(b) *Oral advice.*—The Customs Service will not issue rulings in response to oral requests, nor will Customs personnel ordinarily discuss a substantive Customs question prior to receiving a written request for a ruling. Oral opinions or advice of Customs Service personnel are not binding on the Customs Service. However, oral inquiries may be made to Customs Service offices regarding existing rulings, the scope of such rulings, the types of transactions with respect to which the Headquarters Office or the

Regional Commissioner, region II, or his designee, will issue rulings the scope of the rulings which may be issued, or the procedures to be followed in submitting ruling requests, as described in this part.

* * * * * * *

It is proposed to amend section 177.1(d)(1) & (2) to read as follows:

(d) *Definitions.*—(1) A "ruling" is a written statement issued by the Headquarters Office or the Regional Commissioner, region II, or his designee, that interprets and applies the provisions of the Customs and related laws to a specific set of facts. A "ruling letter" is a ruling issued in response to a written request therefor and set forth in a letter addressed to the person making the request or his designee. A "published ruling" is a ruling which has been published in the CUSTOMS BULLETIN.

(2) An "information letter" is a written statement issued by the Headquarters Office or the Regional Commissioner, region II, or his designee, that does no more than call attention to a well-established interpretation or principle of Customs law, without applying it to a particular set of facts. An information letter may be issued in response to a request for a ruling when (i) the request suggests that general information, rather than a ruling, is actually being sought, (ii) the request is incomplete or otherwise fails to meet the requirements set forth in this part, or (iii) the ruling requested cannot be issued for any other reason, and (iv) it is believed that general information may be of some benefit to the party making the request.

* * * * * * *

3. It is proposed to amend section 177.2(a) to read as follows:

§ 177.2 Submission of ruling requests

(a) *Form.*—A request for a ruling should be in the form of a letter. Requests for valuation and carrier ruling should be addressed to the Commissioner of Customs, attention: Office of Regulations and Rulings, Washington, D.C. 20229. The division and branch in the Office of Regulations and Rulings to which the request should be directed may also be indicated, if known. Requests for tariff classification rulings should be addressed to the Regional Commissioner of Customs, region II, New York, N.Y. 10048.

It is proposed to amend section 177.2(b)(2)(ii) to read as follows:

(b) * * *
(1) * * *
(2) * * *

(ii) *Tariff classification rulings.*—(A) If the transaction involves the importation of an article for which a ruling as to its proper classification under the provisions of the Tariff Schedules of the United States is requested, the request for a ruling should include a full and complete description of the article and, whenever germane to the proper classification of the article, information as to the article's chief use in the United States, its commercial, com-

324-900 O - 80 - 2

mon, or technical designation, and, where the article is composed of two or more materials, the relative quantity (by weight and by volume) and value of each. The ruling request should also note, whenever germane, the purchase price of the article, and its approximate selling price in the United States.

(B) Ruling letters issued by the Regional Commissioner, region II, or his designee, are limited to prospective transactions. The Regional Commissioner or his designee shall not prepare final decisions under Section 177.11: Requests for Advice by Field Offices, Section 174.23: Further Review of Protests, Section 177.10: Change of Practice, 19 U.S.C. 1516 (petitions under section 516, Tariff Act of 1930), or 14.3(g)(1) Customs Manual (difference cases).

(C) In complex or sensitive cases, the requesting party may send the request directly to the Director, Classification and Value Division, U.S. Customs Service, Washington, D.C. 20229. The Headquarters office retains authority to independently review all tariff classification ruling letters issued by the Regional Commissioner, region II, or his designee. If the importer or other person to whom a ruling letter is issued disagrees with the tariff classification set forth, he may, within 30 days of the issuance of the ruling letter, petition the Director, Classification and Value Division, U.S. Customs Service, Washington, D.C., for review of the ruling.

It is proposed to amend section 177.2(d) to read as follows:

(d) *Requests for immediate consideration.*—The Headquarters Office and the Regional Commissioner, region II, or his designee, will normally process requests for rulings in the order they are received and as expeditiously as possible. However, a request that a particular matter be given consideration ahead of its regular order, if made in writing at the time the request is submitted, or subsequent thereto, and showing a clear need for such treatment, will be given consideration as the particular circumstances warrant and permit. Requests for special consideration made by telegram will be treated in the same manner as requests made by letter, but rulings will not ordinarily be issued by telegram. In no event can any assurance be given that a particular request for a ruling will be acted upon by the time requested. However, upon request and where a clear need is shown for such action, a collect telephone call will be made to advise that the ruling letter has been issued and is being mailed.

4. It is proposed to amend paragraphs (a) and (b) of section 177.4 to read as follows:

§ *177.4 Oral discussion of issues*

(a) *Generally.*—A person submitting a request for a ruling and desiring an opportunity to orally discuss the issue or issues involved should indicate that desire in writing at the time the ruling request is filed. Such a discussion will only be scheduled when, in the opinion of the Customs personnel by whom the ruling request is under consideration, a conference will be helpful in de-

ciding the issue or issues involved or when a determination or conclusion contrary to that advocated in the ruling request is contemplated. Conferences are scheduled for the purpose of affording the parties an opportunity to freely and openly discuss the matters set forth in the ruling request. Accordingly, the parties will not be bound by any argument or position advocated or agreed to, expressly or by implication, during the conference unless either party subsequently agrees to be so bound in writing. The conference will not conclude with the issuance of a ruling letter.

(b) *Time, place, and number of conferences.*—If a request for a conference is granted, the person making the request will be notified of the time and place of the conference. Except under highly unusual circumstances, the conference will be held at the Headquarters Office of the U.S. Customs Service in Washington, D.C., or at the New York region. No more than one conference with respect to the matters set forth in a ruling request will be scheduled, unless, in the opinion of the Customs personnel by whom the ruling request is under consideration, additional conferences are necessary.

5. It is proposed to amend section 177.5 to read as follows:

§ 177.5 Change in status of transaction

Each person submitting a request for a ruling in connection with a Customs transaction shall immediately advise the Headquarters Office in writing of any change in the status of that transaction, as defined in section 177.1(d)(3). In particular, the Headquarters Office or the Regional Commissioner, region II, or his designee, must be advised when any transaction described in the ruling request as prospective becomes current and under the jurisdiction of any Customs Service field office. In addition, any person engaged in a Customs transaction coming under the jurisdiction of a Customs Service field office and having previously requested a ruling with respect to that transaction shall advise the field office of that fact. The field office will normally withhold action with respect to any transaction for which a ruling has previously been requested pending the disposition of the ruling request.

6. It is proposed to amend section 177.6 to read as follows:

§ 177.6 Withdrawal of ruling requests

Any request for a ruling may be withdrawn by the person submitting it at any time prior to the issuance of a ruling letter or any other final disposition of the request. All correspondence, documents, and exhibits submitted in connection with the request will be retained in the Customs Service file and will not be returned. In addition, the Headquarters Office may forward to Customs Service field offices which have or may have jurisdiction over the transaction to which the ruling request relates, its views in regard to the transaction or the issues involved therein, as well as appropriate information derived from materials in the Customs Service file.

7. It is proposed to amend section 177.8(a)(1),(2), and (3) to read as follows:

§ *177.8 Issuance of rulings*

(a) *Ruling letters*—(1) *Generally.*—The Headquarters Office and the Regional Commissioner, region II, or his designee, will endeavor to issue a ruling letter, setting forth their determinations with respect to a specifically described Customs transaction whenever a request for such a ruling is submitted in accordance with the provisions of this part and it is in the interest of the sound administration of the Customs and related laws to do so. Otherwise, a request for a ruling will be answered by an information letter or, in those situations in which general information is likely to be of little or no value, by a letter stating that no ruling can be issued.

(2) *Submission of ruling letters to field offices.*—Any person engaging in a Customs transaction with respect to which a ruling letter has been issued by the Headquarters Office or the Regional Commissioner, region II, or his designee, shall ascertain that a copy of the ruling letter is attached to the documents filed in connection with that transaction with the appropriate Customs Service field office or otherwise bring the ruling to the attention of the appropriate Customs officer. A copy of any ruling letter received after the filing of such documents shall be forwarded immediately to the appropriate Customs Service field officer.

(3) *Disclosure of ruling letters.*—The ruling letter shall be based on the information set forth in the ruling request. No part of the ruling letter, including names, addresses, or information relating to the business transactions of private parties, shall be deemed to constitute privileged or confidential commercial or financial information or trade secrets exempt from disclosure pursuant to the Freedom of Information Act, as amended (5 U.S.C. 552), unless the ruling request, as provided in section 177.2(b)(7), clearly identifies the information claimed to be exempt from disclosure and set forth the reasons therefor. Prior to the issuance of the ruling letter, the person submitting the ruling request, will be notified of any decision adverse to his claim for exemption from disclosure and will, upon written request to the Commissioner of Customs within 10 working days of the date of notification, be permitted to withdraw the ruling request. All ruling letters issued by the Headquarters Office or the Regional Commissioner, region II, or his designee, will be available, upon written request, for inspection and copying by any person (with any portions determined to be exempt from disclosure deleted).

* * * * * * *

8. It is proposed to amend paragraphs (a) and (d) of section 177.9 to read as follows:

§ *177.9 Effect of ruling letters: modification or revocation.*

(a) *Effect of ruling letters generally.*—A ruling letter issued by the Headquarters Office or the Regional Commissioner, region II, or his designee, under the provisions of this part represents

the official position of the Customs Service with respect to the particular transaction or issue described therein and is binding on all Customs Service personnel in accordance with the provisions of this section until modified or revoked. In the absence of a subsequent change of practice or other modification or revocation which affects the principle of the ruling set forth in the ruling letter, that principle may be cited as authority in the disposition of transactions involving the same circumstances.

* * * * * * *

(d) *Modification or revocation of ruling letters*—(1) *Generally.*—Any ruling letter found to be in error or not in accordance with the current views of the Customs Service may be modified or revoked. Modification or revocation of a ruling letter shall be effected by giving notice to the person to whom the ruling letter was adressed and, where circumstances warrant, by the publication of a notice or other statement in the CUSTOMS BULLETIN.

(2) *Effect of modification or revocation of ruling letters.* The modification or revocation of a ruling letter will not be applied retroactively with respect to the person to whom the ruling was issued, or to any person directly involved in the transaction to which that ruling related, provided (i) The request for a ruling contained no misstatement or omission of material facts,

(ii) The facts subsequently developed are not materially different from the facts on which the ruling was based,

(iii) There has been no change in the applicable law,

(iv) The ruling was originally issued with respect to a prospective transaction, and

(v) All the parties involved in the transaction acted in good faith in reliance upon the ruling and retroactive modification or revocation would be to their detriment.

Nothing in this subparagraph will prohibit the retroactive modification or revocation of a ruling with respect to a transaction which was not prospective at the time the ruling was issued, inasmuch as such a transaction was not entered into in reliance on a ruling from the Headquarters Office or the Regional Commissioner, region II, or his designee.

9. It is proposed to amend section 177.11(b)(1) to read as follows:

§ 177.11 Requests for advice by field offices.

* * * * * * *

(b) *Certain current transactions*—(1) *When a ruling has been issued*—(i) *Requests by field offices.*—If the Headquarters Office, or the Regional Commissioner, region II, or his designee, has issued a ruling letter with respect to a particular Customs transaction and the Customs Service field office having jurisdiction over that transaction feels that the ruling should be modified or revoked, the field office will forward to the Headquarters Office, pursuant to section 177.9(b)(1), a request that the ruling be reconsidered. The field office will notify the importer or other person to whom the ruling letter was issued, in writing, that it has requested the Headquarters Office to reconsider the ruling.

* * * * * * *

AUTHORITY

These amendments are proposed under the authority of Revised Statute 251, as amended, and section 624, 46 Stat. 759 (19 U.S.C. 66, 1624).

COMMENTS

Before adopting this proposal, consideration will be given to any written comments timely submitted to the Commissioner of Customs. Comments submitted will be available for public inspection in accordance with section 103.8(b), Customs Regulations (19 CFR 103.8(b)), during regular business hours at the Regulations and Research Division, room 2426, Headquarters, U.S. Customs Service, 1301 Constitution Avenue NW., Washington, D.C. 20229.

Early implementation of this proposal would significantly improve the ruling process and be of substantial public benefit. It is therefore considered impractical and contrary to the public interest to permit a 60-day period for public comments.

Accordingly, the period within which comments are to be submitted is 30 days from the date of publication of this proposal in the Federal Register, instead of the 60 days ordinarily required by Executive Order 12044 of March 23, 1978 (43 F.R. 12661), and the implementing Treasury Department directive of November 8, 1978 (43 F.R. 52120).

REGULATION DETERMINED TO BE NONSIGNIFICANT

In a directive published in the Federal Register on November 8, 1978 (43 F.R. 52120), implementing Executive Order 12044, Improving Government Regulations, the Treasury Department stated that it considers each regulation or amendment to an existing regulation published in the Federal Register and codified in the Code of Federal Regulations to be significant. However, regulations which are nonsubstantive, are essentially procedural, do not materially change existing or established new policy, and do not impose substantial additional requirements or costs on, or substantially alter the legal rights or obligations of, those affected, with Secretarial approval, may be determined not to be significant. Accordingly, it has been determined that these proposed amendments do not meet the Treasury Department criteria in the directive for significant regulations.

DRAFTING INFORMATION

The principal author of this document was Lawrence P. Dunham, Regulations and Research Division, Office of Regulations and Rulings,

U.S. Customs Service. However, personnel from other Customs offices participated in its development.

R. E. CHASEN,
Commissioner of Customs.

Approved: July 18, 1980.
JOHN P. SIMPSON
(For Assistant Secretary of the Treasury.)

Decisions of the United States Court of Customs and Patent Appeals

C.A.D. 1250

SCHERING CORPORATION *v.* THE UNITED STATES, No. 79-36
(——F.2d——)

1. CUSTOMS COURT—JURISDICTION

Judgment of Customs Court granting Government's motion to dismiss for lack of jurisdiction, and denying appellant's motion for rehearing, is affirmed.

2. ID.

A question of jurisdiction may be raised at any time during the pendency of the action.

3. ALLEGATIONS OF JURISDICTIONAL FACTS

If allegations of jurisdictional facts by the party who seeks the exercise of jurisdiction in his favor are challenged by his adversary in any appropriate manner, he must support them by competent proof.

4. ID.

In view of the absence of any facts established by competent proof in either appellant's response to the cross-motion to dismiss or its motion for rehearing, the ruling of the court denying appellant's motion for rehearing was not manifestly erroneous.

U.S. Court of Customs and Patent Appeals, July 17, 1980

Appeal from U.S. Customs Court

[Affirmed.]

James S. O'Kelly and *Michael Alva Johnson*, attorneys for appellant.

Alice Daniel, Assistant Attorney General, *David M. Cohen*, Director, *Joseph I. Liebman*, Attorney in Charge, Field Office for Customs Litigation Branch, *Saul Davis*, Commercial Litigation Branch.

[Oral argument on April 10, 1980, by Michael A. Johnson for appellant, Saul Davis for appellee.]

Before MARKEY, Chief Judge, RICH, BALDWIN and MILLER, Associate Judges, and FORD, Judge.[1]

BALDWIN, Judge.

[1] This appeal is from the order of the U.S. Customs Court grant-

[1] Hon. Morgan Ford, U.S. Customs Court, sitting by designation.

ing the Government's motion to dismiss Court No. 76-12-02625 for lack of jurisdiction, and from the order denying appellant's motion for rehearing, in the form of a motion to set aside the dismissal and to grant a hearing on the jurisdictional issue presented. The orders were entered without accompanying opinions in support thereof. We affirm.

ISSUE

The issue presented is whether the procedures employed by the Customs Court in dismissing appellant's civil action for lack of jurisdiction were in conformity with the statutes of the United States and the rules of the Customs Court.

BACKGROUND

Appellant filed a protest against the classification decision by the Customs Service regarding the entry of certain merchandise. The face of the protest shows that the date of liquidation for the subject entry by the Customs Service was September 12, 1975, and that the filing date for the protest was May 26, 1976. The protest bore on its face the statement "(t)he entry herein was not liquidated in accordance with the requirements of 21 (sic) CFR 159.9 and the liquidation is therefore void."[2] The protest was denied as untimely filed on August 6, 1976.[3] Appellant filed a summons on December 2, 1976, commencing a civil action pursuant to 28 U.S.C. 1582(a)[4] to contest the denial of

[2] There was a clerical error in the CFR citation, which should have read 19 CFR 159.9, a mandatory provision of the Customs Regulations pertaining to notice and date of liquidation which reads in pertinent part:

§159.9 Notice of liquidation and date of liquidation for formal entries

(a) *Bulletin notice of liquidation.*—Notice of liquidation of formal entries shall be made on a bulletin notice of liquidation, Customs form 4333 or 4335:

* * * * * * *

(b) *Posting of bulletin notice.*—The bulletin notice of liquidation shall be posted for the information of importers in a conspicuous place in the customhouse at the port of entry * * *.

(c) *Date of liquidation.*—The bulletin notice of liquidation shall be dated with the date it is posted or lodged in the customhouse for the information of importers. The entries for which the bulletin notice of liquidation has been prepared shall be stamped "Liquidated," with the date of liquidation, which shall be the same as the date of the bulletin notice of liquidation. Such stamping shall be deemed the legal evidence of liquidation.

The liquidation of an entry is the final administrative determination of all moneys owed the Government with regard to each particular entry of merchandise. See 19 CFR 159.1.

[3] 19 U.S.C. 1514(b)(2)(A) provides in pertinent part:

§1514. Protest against decision of appropriate Customs officer

* * * * * * *

(b) *Form, number, and amendment of protest; filing of protest.*

* * * * * * *

(2) A protest of a decision, order, or finding described in subsection (a) of this section shall be filed with such Customs officer *within 90 days* after but not before—

(A) notice of liquidation or reliquidation * * *. [Italic ours.]

[4] 28 U.S.C. 1582(a) provides:

§1582. Jurisdiction of the Customs Court

(a) The Customs Court shall have exclusive jurisdiction of civil actions instituted by any person whose protest pursuant to the Tariff Act of 1930, as amended, has been denied, in whole or in part, by the appropriate Customs officer, where the administrative decision, including the legality of all orders and findings entering into the same, involves: (1) The appraised value of merchandise; (2) the classification and rate and amount of duties chargeable; (3) all charges or exactions of whatever character within the jurisdiction of the Secretary of the Treasury; (4) the exclusion of merchandise from entry or delivery under any provisions of the Customs laws; (5) the liquidation or reliquidation of an entry, or a modification thereof; (6) the refusal to pay a claim for drawback; or (7) the refusal to reliquidate and entry under sec. 520(c) of the Tariff Act of 1930, as amended

324-900 O - 80 - 3

the protest. The summons set forth that the contested administrative decision involved the classification, rate, or amount of the subject entry.

Appellant then moved to suspend the civil action pending the final determination of a test case pursuant to rule 14.7 of the Customs Court. The Government opposed the motion to suspend the subject action and filed a cross-motion to dismiss for lack of jurisdiction. Appellant responded, arguing that the clear language on the face of the protest had raised an issue of compliance with notice requirements and, therefore, the validity of the liquidation, involving issues of fact for trial. Appellant asserted that employees of counsel had attempted to obtain the entry papers for review, at which time they were found to be unavailable. Appellant filed no supporting papers explaining the facts and circumstances surrounding the alleged unavailability of the entry papers, nor did appellant substantiate its efforts and diligence in obtaining them.

The Government replied to the response, asserting that appellant had failed to provide any affidavits of fact in support of the statements of counsel alleging unavailability of the entry papers. The Government attached the affidavit of Mr. George Wallace, Chief, Documents Control Branch of the Customs Service, New York region, which asserted that the

> entries were available for inspection on the date the bulletin notices of liquidation were posted, and that they would have been, in accordance with our standard operating procedure, placed on the table for examination by the importers or their attorneys.

Based on the record consisting of the summons, the various motion papers referred to above, the responses and replies thereto, and the Wallace affidavit, the court ordered dismissal of the subject case for lack of jurisdiction.

Appellant filed a motion to set aside dismissal and for rehearing, annexing an affidavit of counsel. Counsel for appellant argued certain procedural matters therein pertaining to the rules of the Customs Court, which we discuss more fully in our opinion, infra. Generally, counsel asserted that the procedure followed by the court deprived appellant of an opportunity to present evidence in contravention of due process of law.

The Customs Court denied appellant's motion for rehearing by order without an accompanying opinion.

OPINION

The Customs Court has jurisdiction of a civil action instituted by any person whose protest pursuant to the Tariff Act of 1930, as

amended, has been denied.[5] That jurisdiction is limited by 28 U.S.C. 1582(c),[6] which requires that a protest be filed as prescribed by 28 U.S.C. 1514. Under 28 U.S.C. 1514(b)(2)(A),[7] a protest must be filed "within 90 days after * * * notice of liquidation." The relevant regulation, 19 CFR 159.9,[8] provides that notice of liquidation shall be made on a bulletin notice of liquidation which shall be posted in the customhouse at the port of entry, and that the date of liquidation shall be the date the bulletin notice is posted in the customhouse.

The protest and the summons prepared by appellant specified the date of liquidation as September 12, 1975. The filing date of the protest is shown on its face to be May 26, 1976, more than 90 days after date of liquidation. The dates in the papers before the court thus establish prima facie that the protst was untimely.

However, the law is well settled that a liquidation is not complete until the notice provisions of 19 CFR 159.9 have been complied with and the entry papers are made available to the importer.[9] In *General Petroleum Corp.* v. *United States*, 56 Cust. Ct. 249, 251, C.D. 2632 (1966), the appellate term of the Customs Court held that the

> protest period does not run if the importer or his representative is diligently seeking access to the entry papers but is unable to obtain it. * * * While it is the practice to dismiss a protest on motion when the Government, as here, shows only that over 60 (now 90) days ran from the liquidation to the protest, it must follow that facts established in addition to these dates may and do at times show that the protest is timely.

Accordingly, we must determine whether appellant has been accorded an opportunity in accord with procedural due process to place such additional facts before the court.

Appellant contends that the proceedings below violated its rights to a hearing, to introduce evidence, and to hear and cross-examine appellee's witness, in contravention of the specific terms of 28 U.S.C. 2637(a).[10] Appellant argues that the order of dismissal had been

---

[5] See n. 4 supra.

[6] 28 U.S.C. 1582(c) (1976) provided:

> (c) The Customs Court shall not have jurisdiction of an action unless (1) either a protest has been filed, as prescribed by sec. 514 of the Tariff Act of 1930, as amended, and denied in accordance with the provisions of sec. 515 of the Tariff Act of 1930, as amended, or if the action relates to a decision under sec. 516 of the Tariff Act of 1930, as amended, all remedies prescribed therein have been exhausted, and (2) except in the case of an action relating to a decision under sec. 516 of the Tariff Act of 1930, as amended, all liquidated duties, charges or exactions have been paid at the time the action is filed.

[7] See n. 3 supra.

[8] See n. 2 supra.

[9] We note here that unavailability of entry papers does not void an otherwise valid liquidation as asserted by appellant in its statement on the face of the protest, but rather tolls the liquidation until the entry papers become available for examination. See *United States* v. *A. N. Deringer, Inc.*, 66 CCPA —, C.A.D. 1220, 593 F. 2d 1015, 1020 (1979); *Wong Sung Man* v. *United States*, 27 Cust. Ct. 248, C.D. 1379 (1951).

[10] 28 U.S.C. 2637(a) (1976) provided:

> § 2637. *Witnesses; inspection of documents*
>
> (a) In any proceeding in the Customs Court, under rules prescribed by the court, the parties and their attorneys shall have an opportunity to introduce evidence, to hear and cross-examine the witnesses of the other party, and to inspect all samples and all papers admitted or offered as evidence, except as provided in subsection (b) of this section.

signed and entered before a copy of the Wallace affidavit had even been received by its attorneys, thus denying it the opportunity to rebut such affidavit with evidence of its own or to cross-examine the affiant.

However, the Government has raised jurisdictional objections by way of a cross-motion to dismiss, an appropriate manner of raising such objections in accordance with the rules of the court.[11] *McNutt et al.* v. *General Motors Acceptance Corp.*, 298 U.S. 178, 189 (1936). Appellant was granted an opportunity to respond to this motion[12] to establish facts to support the alleged unavailability of entry papers, but in that response chose only to point out its allegations of jurisdiction with its conclusion that the validity of the liquidation involved issues of fact for trial. The response failed to support such allegations with competent proof to establish jurisdictional facts. Again in its motion for rehearing, appellant failed to introduce such facts as would establish jurisdiction, relying instead on legal argument to support its contentions. Therefore, without even considering the Wallace affidavit, there have been no facts established to raise any question with respect to the prima facie untimeliness of the protest.

Appellant contends that the rules of the Customs Court preclude the Government from cross-moving to dismiss for lack of jurisdiction. Appellant contends that rule 14.7(c)[13] does not permit the filing of a cross-motion to dismiss as a response to a motion for suspension and that rule 4.7(b)[14] contemplates that a complaint has been filed in the action. There is no support for these contentions in the language of these rules. Rule 14.7(c) merely outlines the minimum response to a motion to suspend. Rule 4.7(b) sets forth the types of motions to dismiss that may be filed either preanswer or postanswer.

[2] It is established that a question of jurisdiction may be raised at any time during the pendency of the action. *James Akeroyd & Son* v. *United States*, 19 CCPA 249, 258, T.D. 45341 (1931). The plain import of the statutes[15] specifically conferring jurisdiction is that the Customs Court is vested with authority to inquire at any time whether these jurisdictional requirements are met. **[3]** If allegations of jurisdictional

---

[11] Rule 4.7(b) provides:

Rule 4.7. Defenses and Objections: When and How Presented

* * * * * * *

(b) *Defenses: how presented.*—The following defenses may be made by a motion to dismiss: (1) That plaintiff has no standing in the matter; (2) lack of jurisdiction of the subject matter; (3) failure to perform conditions precedent; and (4) failure to state a claim upon which relief may be granted. A motion making any of these defenses may be made before answer.

[12] Rule 4.12(c) provides in relevant part that "an objection or response to a dispositive motion, i.e., a motion to dismiss the action * * * shall be filed within 30 days after service of such motion."

[13] Rule 14.7(c) provides:

Rule 14.7. Suspension Procedure

* * * * * * *

(c) *Response to motion.*—The response to a motion for suspension shall include: a statement consenting to the motion; or a statement of the reason for opposing the motion; or a statement of the reason for neither consenting to nor opposing the motion.

[14] See n. 11 supra.

[15] See n. 3, 4, and 6 supra.

facts by the party who seeks the exercise of jurisdiction in his favor are challenged by his adversary in any appropriate manner, he must support them by competent proof. See *McNutt et al.* v. *General Motors Acceptance Corp*, supra.

Although appellant argues that he has been deprived of procedural due process, he is in actuality requesting a second chance to make necessary showings to establish jurisdiction that was properly challenged by the Government's cross-motion to dismiss. In view of the dates provided on the face of the papers before the court, appellant's opportunity to establish any necessary facts in its response to the cross-motion to dismiss, and its failure to avail itself of such opportunity, we see no reason to disturb the order of the Customs Court dismissing this action for lack of jurisdiction.

Appellant contends that the judgment of the court was devoid of the mandatory findings of fact prescribed by 28 U.S.C. 2638(a).[16] The court entered its order with no memorandum opinion accompanying the order. However, as discussed above, appellant has failed to establish any facts in this action that would create a contested issue for decision by the judge. On the face of the papers before the court, the protest was clearly filed outside the 90-day limit necessary to confer jurisdiction of the subject matter. Therefore, we cannot agree with appellant's contentions in this respect.

[4] In view of appellant's opportunity pursuant to rule 4.12(c) to file a response to the Government's cross-motion to dismiss, and in view of the absence of any facts established by competent proof in either appellant's response or its motion for rehearing, we hold that the ruling of the court denying appellant's motion for rehearing was not manifestly erroneous, and we therefore will not disturb that ruling. *Reynold's Trading Corp., et al.* v. *United States, et al.*, 61 CCPA 57, 59, C.A.D. 1120, 496 F. 2d 1228, 1230 (1974).

The judgment is *affirmed*.

---

[16] 28 U.S.C. 2638(a) provides:

§ 2638. Decisions; findings of fact and conclusions of law; effect of opinions

(a) A decision of the judge in a contested case shall be supported by either (1) a statement of findings of fact and conclusions of law, or (2) an opinion stating the reasons and facts upon which the decision is based.

U.S. Customs Service

Customs Service Decisions

DEPARTMENT OF THE TREASURY,
OFFICE OF THE COMMISSIONER OF CUSTOMS,
Washington, D.C.

The following are decisions made by the U.S. Customs Service where the issues involved are of sufficient interest or importance to warrant publication in the CUSTOMS BULLETIN.

Dated: July 17, 1980.

HARVEY B. FOX
(For Director, Office of
Regulations and Rulings).

(C.S.D. 80-101)

Classification: Polyethylene Sheeting and Tarpaulins

Date: September 13, 1979
File: CLA-2:R:CV:MA
057505 C

Your letters dated during the months of November and December 1978, requested action on the part of the U.S. Customs Service to remedy inconsistent classification of polyethylene sheeting and tarpaulins.

Pursuant to your inquiry this office requested a report from designated ports as to their practice in classifying the instant merchandise. Samples of the material which you submitted (green and blue), were enclosed with our request. A study of these reports leads us to the conclusion that polyethylene sheeting and tarpaulins are being correctly classified at these ports.

The ports we queried advised us that tarpaulins with transparent coating similar to the green sample which you submitted are being classified under the provision for other articles not specially provided for, of textile materials, not ornamented, of manmade fibers, in item 389.62, Tariff Schedules of the United States (TSUS), and dutiable at the rate of 25 cents per pound plus 15 percent ad valorem.

Tarpaulins with nontransparent coating similar to the blue sample you submitted are being classified under the provision for other articles not specially provided for, of plastics in item 774.60, TSUS, and dutiable at the rate of 8.5 percent ad valorem.

If material represented by the samples were imported in mill roll form, it would be classifiable, whether transparent or nontransparent, under the provision for woven or knit fabrics (except pile or tufted fabrics), of textile materials, coated or filled with a rubber or plastics material, or laminated with sheet rubber or plastics, of manmade fibers, in item 355.81, TSUS, and dutiable at the rate of 6 percent ad valorem, if over 70 percent by weight of rubber or plastics, or at the rate of 12.5 cents per pound plus 15 percent ad valorem, in item 355.82, TSUS, if not over 70 percent by weight of rubber or plastics.

Our letter CLA-2:R:CV:MA 056792 GK, which you think may be causing erroneous classifications at the Port of Charleston, covered tarpaulins which were coated with a nontransparent plastic. We are satisfied after reviewing the report from Charleston and a discussion with the appropriate officials there that they are aware of the different classifications applicable to tarpaulins coated with transparent and nontransparent plastics. They are not applying our letter to all importations of tarpaulins without regard to the transparency of the coatings.

(C.S.D. 80-102)

Drawback: Certificate of Delivery; Section 22.15(b), Customs Regulations

Date: September 14, 1979
File: DRA-1-09-R:CD:D B
210758

Issue.—Whether a commercial bill of lading and computerized inventory records are a sufficient substitute for a certificate of delivery under section 22.15(b), Customs Regulations.

Facts.—A drawback claimant imports methocrylated butadiene styrene (MBS) to produce polyvinyl chloride (PVC). Some of the imported MBS was delivered to a public warehouse for storage pending delivery to the premises of the drawback claimant. The drawback claimant states that the transfer of the stored MBS from the public warehouse to the premises of the drawback claimant is shown by a commercial bill of lading issued by the operator of the public warehouse and the computerized inventory records of the drawback claimant.

The drawback claimant was not the importer of the MBS. In its statement, the drawback claimant stated that it would use the import-

er's certificate of delivery (Customs Form 7543) to establish receipt of the imported MBS.

Law and analysis.—Section 1313(b), Tariff Act of 1930, as amended (19 U.S.C. 1313(b)) and section 22.5(a)(2), Customs Regulations (19 CFR 22.5(a)(2)), require that the imported merchandise be used in manufacture or production. In order to establish that use, the drawback claimant must show actual receipt of the imported merchandise.

Section 22.15(b), Customs Regulations (19 CFR 22.15(b)), requires that if the imported merchandise is not delivered direct from the importer to the manufacturer, each intermediate transfer shall be shown on a certificate of delivery (Customs form 7543). In this situation the imported MBS was delivered from the importer to a public warehouse rather than directly to the manufacturer/drawback claimant. Accordingly, section 22.15(b), Customs Regulations, required that the intermediate transfer, from the warehouse to the claimant, be shown on the certificate of delivery.

The drawback claimant contends that a commercial bill of lading and the claimant's computerized inventory records constitute an adequate substitute for the certificate required by section 22.15(b), Customs Regulations. Without reaching the issue of whether there is authority to amend the explicit requirements of a regulation except by the procedures set forth in the Administrative Procedure Act (5 U.S.C. 552), an adequate basis exists to rebut the contention of the drawback claimant.

The drawback statement submitted by the drawback claimant, when approved, became a contract between the claimant and the U.S. Customs Service. Failure to adhere to the terms of that contract is a basis for denial of drawback.

Unlike a certificate of delivery, a bill of lading can be signed by any employee of the drawback claimant. A certificate of delivery must be signed by the president, vice president, secretary, or treasurer of a corporation, or by a person holding a Customs power of attorney. A bill of lading covers an exchange between two private parties. The person who signs a certificate of delivery certifies its accuracy to the U.S. Customs Service and is subject to substantial penalties if that certification is not accurate because of fraud or negligence by the signer. As an aside, the copy of the bill of lading furnished by the drawback claimant in support of its contention does not contain a signature by any person indicating receipt by the drawback claimant.

The computerized inventory records do not have any provision for certification as to their accuracy by a person who is knowledgeable of the actual facts. Those records cannot be accepted as a substitute for a certificate of delivery.

It has long been fundamental to drawback law that a drawback

claimant must adhere to the requirements set forth in the applicable statutes and regulations. See *U.S.* v. *W. C. Hardesty Co.*, 36 CCPA 47, C.A.D. 396 (1949); *Spencer Kellogg & Sons* v. *U.S.*, 13 Ct. Cust. Appls. 612, T.D. 41459 (1926).

Holding.—A commercial bill of lading and computerized inventory records are not a substitute for a certificate of delivery under section 22.15(b), Customs Regulations.

(C.S.D. 80–103)

Prohibited and Restricted Importations: Prerecorded Cassettes

Date: September 14, 1979
File: CPR-3-R:E:E
709690 MC

This ruling concerns the possible restrictions and prohibitions of the 1976 U.S. copyright law applicable to the importation of cassettes prerecorded with reproductions of phonograph record albums.

Issue.—Whether Customs is empowered to prevent the importation of cassettes on which sound recordings, originally fixed prior to February 15, 1972, have been duplicated.

Facts.—A California corporation is involved in marketing stereo equipment and cassette tapes. Part of the stereo package sold includes coupons which may be used to order re-recordings on blank cassettes of albums originally recorded prior to February 15, 1972. The corporation has failed to secure limited licenses from the record companies to reproduce their recordings. Nevertheless, the corporation seeks to duplicate the recordings on cassettes in a facility in either Mexico or Costa Rica and import the tapes into the United States.

Law and analysis.—Section 602 of the 1976 U.S. copyright law (17 U.S.C. 602) states:

> Importation into the United States without the authority of the owner of copyright under this title, of copies or phonorecords of a work that have been acquired outside the United States is an infringement of the exclusive right to distribute copies of phonorecords under section 106, actionable under section 501.

Customs is empowered to prevent the importation of works constituting an infringement of copyright.

Although the corporation here has failed to secure the permission of the original album producer, section 301 of the copyright law exempts the recordings in question here from Customs protection by providing, in part, that "no sound recording fixed before February 15, 1972, shall be subject to copyright under this title." The same section also states:

> With respect to sound recordings fixed before February 15, 1972, any rights or remedies under the common law or statutes of any

324-900 O - 80 - 4

> State shall not be annulled or limited by this title until February 15, 2047.

Thus, although Federal law provides no protection for pre-1972 artists and producers, redress may be obtained in the States.

Section 602 provides, in part, that:

> where the copies or phonorecords were lawfully made, the U.S. Customs Service has no authority to prevent their importation unless the provisions of section 601 are applicable.

Since section 601 concerns the manufacturing requirement, no such considerations are at issue here.

Holding.—Customs has no authority under sections 301 or 602 of the U.S. copyright law to prevent the importation of cassettes legally prerecorded in Mexico or Costa Rica with sounds from recordings originally fixed prior to February 15, 1972.

(C.S.D. 80–104)

Prohibited and Restricted Importations: Trademark Infringement; "Cross" Electronic Calculators

Date: September 14, 1979
File: TMK-3-R:E:E
711274 SO

This ruling concerns the applicability of the prohibition set forth in section 526 of the Tariff Act of 1930, as amended (19 U.S.C. 1526), against the importation into the United States of merchandise of foreign manufacture bearing an American trademark.

Issue.—Would the importation of electronic calculators bearing the mark "Cross" infringe upon the rights of the owner of the registered trademark, "Cross," which heretofore has been applied exclusively to pens, pencils, ballpoint pen refills, erasers, writing leads, pen and pencil cases, and desk sets?

Facts.—An importation of electronic calculators bearing the mark "Cross" is contemplated. The agent for the importer has asked if these calculators would be considered to infringe upon the registered trademark, "Cross," owned by (name of company), a Rhode Island corporation. This company has recorded their trademark with Customs for import protection. The agent expressed the opinion that electronic calculators are not related to pens and writing instruments.

Law and analysis.—Section 526 of the Tariff Act of 1930, as amended (19 U.S.C. 1526) prohibits the importation into the United States of any merchandise of foreign manufacture bearing a trademark owned by a corporation created or organized within the United States, provided a copy of such trademark registration is filed with the

Secretary of the Treasury and recorded in the manner provided by regulations (19 CFR 133.1–133.7). Any such merchandise bearing a counterfeit mark, within the meaning of section 45 of the act of July 15, 1946 (commonly referred to as the Lanaham Act, 60 Stat. 443; 15 U.S.C. 1127), imported in violation of the provisions of section 42 of the act of July 15, 1946 (15 U.S.C. 1124), shall be seized, and, in the absence of written consent of the trademark owner, forfeited for violations of the Customs laws.

The term "counterfeit" is defined in the law (15 U.S.C. 1127) as a spurious mark which is identical with, or substantially indistinguishable from, a registered mark. Since the importer contemplates using a mark identical with the registered mark "Cross," it could be considered to be a counterfeit (a spurious mark), but only if such use is held to be infringing.

Infringement of federally registered marks is governed by the test of whether defendant's use is likely to cause confusion, or to cause mistake, or to deceive. A purely fanciful, coined mark such as "Kodak" is labeled as "strong" while a descriptive mark is called "weak." Strong marks are given strong protection—protection over a wide range of related products and variations on appearance of the mark. Weak marks are given a narrow range of protection both as to products and as to visual variations.

The more distinctive the trademark is, the greater its influence in stimulating sales, its hold on the memory of purchasers, and the likelihood of associating similar designations on other goods with the same source. If the trademark is a coined word such as "Kodak," it is more possible that all goods on which a similar designation is used will be regarded as emanating from the same source than when the trademark is one in common use on a variety of goods, such as "Gold Seal," "Royal," "Blue Ribbon," "Premium," "Champion," "Ideal," "Star," etc. Common words which are descriptive or suggestive, such as those mentioned above, are considered to be weak marks. Because "Cross" is also a descriptive word in common usage, we would characterize it as a weak mark.

Where the marks in a case are identical, such as those presently under consideration, the use of the mark by a newcomer is unlawful, unless the newcomer's use is so foreign to that of the prior owner as to insure him not only against confusion in trade but also against injury to his reputation. The test to be applied when the question arises, is the likelihood of confusion as to the difference in the ownership of the two identical marks attached to the goods. Under the familiar rule, any doubt should be resolved against the newcomer, inasmuch as it had an unlimited field to choose from and could have selected a completely different mark.

Holding.—Because "Cross" is considered to be a weak mark and has been attached to a line of merchandise (electronic calculators) which is remotely connected to goods that the trademark owner would be likely to make or sell (pens and pencils), we are of the opinion that there will be little likelihood of confusion as to the difference in the ownership of the two identical marks. Accordingly, entry of the imported electronic calculators bearing the mark "Cross" would not be prohibited as infringing on the registered trademark "Cross" for pens, pencils, ballpoint pen refills, erasers, writing leads, pen and pencil cases, and desk sets.

(C.S.D. 80-105)

Classification: Spiked Golf Shoes; Computation of Exterior Surface Area of Sole and Upper

Date: September 14, 1979
File: CLA-2:R:CV:MA
062248 C

This ruling concerns the tariff classification of a golf shoe manufactured in England.

Facts.—The sample is a spiked golf shoe of PVC unit-molded construction and is lined with a cotton fabric. It has a completely detachable leather kiltie secured to the upper by the lacing of the vamp closure.

The kiltie is a form of ornamentation and is not considered to be part of the exterior surface area of the upper.

The inquirer maintains that the leather strip added to the side of the heel portion and the area encompassed by the metal spikes should be considered as part of the exterior surface area of the sole. He adds that the inclusion of the leather surface plus the metal areas as exterior surface area would reduce the area covered by plastics below the 90-percent limit required for classification under item 700.53, Tariff Schedules of the United States (TSUS).

Issue.—Whether the leather strip added to the heel portion of the shoe and the area encompassed by the metal spikes should be computed in determining the exterior surface area of the soles and uppers of the instant golf shoe.

Law and analysis.—Item 700.51, TSUS, provides for other footwear designed to be worn over, or in lieu of other footwear as a protection against water, oil, grease, or chemicals, or cold or inclement weather, and having soles and uppers of which over 90 percent of the exterior surface area is polyvinyl chloride, whether or not supported or lined with polyvinyl chloride, but not otherwise supported or lined. The applicable rate of duty is 12.5 percent ad valorem.

Item 700.53, TSUS, provides for other footwear designed to be worn over, or in lieu of other footwear as a protection against water, oil, grease, or chemicals, or cold or inclement weather, all the foregoing having soles and uppers of which over 90 percent of the exterior surface area is rubber or plastics (except footwear with uppers of nonmolded construction formed by sewing the parts thereof together and having exposed on the outer surface a substantial portion of functional stitching). The applicable rate of duty is 37.5 percent ad valorem.

It should be noted that the exterior surface area referred to with respect to classification under items 700.51 and 700.53, TSUS, has reference to the combined area of the sole and upper.

Item 700.58, TSUS, provides for other footwear which is over 50 percent by weight of fibers and rubber or plastics with at least 10 percent by weight being rubber or plastics and having uppers of which over 90 percent of the exterior surface area is rubber or plastic. The applicable rate of duty is 6 percent ad valorem.

Based on previous administrative rulings it is our position that the area encompassed by the metal spikes should be included in any computation of the exterior surface area of the shoe. The fact that the spikes may be easily removed from the sole by unscrewing is not relevant inasmuch as golf shoes in their normal condition are spiked.

We do not consider that portion of the heel covered by the leather strips as exterior surface area of the sole because the leather strips are decorative material which may be easily removed without rendering the shoe unserviceable as footwear. It is to be noted the strips added to the side of the heel perform no useful function.

Holding.—The exterior surface area of the sole and upper of the sample shoe is over 90 percent plastic. Consequently, the shoe is dutiable at the rate of 37.5 percent ad valorem under item 700.53, TSUS.

Classification of the shoe under item 700.51, TSUS, is precluded because the shoe is lined with a cotton fabric.

(C.S.D. 80–106)

Classification: Moon Boots

Date: September 14, 1979
File: CLA-2:R:CV:MA
062391 C

Pursuant to 19 U.S.C. 1516 you ask for information as to the classification and rate of duty for imported "Moon boots." A sample was submitted.

You state that the Moon boots involved: (1) Are 50 percent by weight of rubber or plastics; (2) are apparently of nonmolded construction formed by sewing the parts thereof together and having exposed on the outer surface a substantial portion of functional stitching; (3) have over 90 percent of their exterior surface area of rubber or plastics; and (4) have shell soles, the sides of which overlap and are sewn to the polyurethane upper.

The sample which may be representative of some imported Moon boots has a premolded rubber/plastic shell bottom, the sides of which extend up to 4 inches from the sole. This shell bottom is ultimately stitched to a polyurethane upper. An inserted polyfoam boot liner is permanently stitched at the top of the polyurethane upper.

You maintain that the sides of the shell which overlap and are sewn to the polyurethane upper constitute "foxing or a foxing-like band applied or molded at the sole and overlapping the upper."

The issue presented is whether the sample boot has a foxing or a foxing-like band applied or molded at the sole which overlaps the upper. If so, the boot is excluded from classification under item 700.58, Tariff Schedules of the United States (TSUS), and is dutiable at the rate of 20 percent ad valorem under item 700.60, TSUS.

It is our position that the premolded sides of the shell bottom, from the inside sole platform up, are part of the upper, thus obviating the concept that there is foxing overlapping the upper. With respect to Moon boots the upper is incomplete before it is stitched to the shell bottom. It would fall down were it not stitched to it. Consequently, it is our view that the sides of the shell do not overlap the upper; all they overlap is about one-half inch of the plastic necessary for reinforcement.

In is our position that the sample boot does not have foxing or a foxing-like band applied or molded at the sole which overlaps the upper. Thus, the sample is classifiable under the provision for other footwear which is over 50 percent by weight of rubber or plastics and having uppers of which over 90 percent of the exterior surface area is rubber or plastics, in item 700.58, TSUS, and dutiable at the rate of 6 percent ad valorem.

(C.S.D. 80-107)

Drawback: Approved Manufacturing Period Limited to a Harvesting Season

Date: September 20, 1979
File: DRA-1-R:CD:D NK
210624

Issue.—Whether manufacturers of orange juice products may

designate for drawback imported merchandise of the required kind and quality which is received at any time during an approved manufacturing period not exceeding a harvesting season.

Facts.—A manufacturer of orange juice products submitted a drawback entry with an abstract covering a manufacturing period of approximately 20 months. As a result, some articles were manufactured with the use of domestic substituted merchandise and exported prior to the receipt of the imported designated merchandise.

Law and analysis.—Section 1313(b), title 19, United States Code, provides in substance that if imported designated and domestic substituted merchandise of the same kind and quality "are used in the manufacture or production of articles within a period not to exceed 3 years from the receipt" of the imported designated merchandise by the manufacturer or producer, drawback is allowed upon exportation of the manufactured articles.

Section 22.5(a)(4) of the Customs Regulations requires that the records of a manufacturer or producer show that the exported articles were manufactured or produced within 3 years after the date on which the designated merchandise was received by the manufacturer or producer of the exported articles. Further, drawback proposals are generally approved by Customs Headquarters which contain statements in accordance with section 22.5(a)(4).

To save time, expense and paperwork, a drawback claimant may select the use of an abstract to show the total quantity of merchandise used to manufacture articles during a manufacturing period covered by the abstract. However, if a claimant wishes to use a manufacturing period it must so state in its drawback proposal (statement). In general, a period longer than 3 months would not be approved.

In a letter dated June 22, 1961 (CIE 904/61, dated Aug. 2, 1961), Customs held that a packing company could designate as the basis for drawback imported sugar of the required kind and quality which was received at any time during the manufacturing period and used in the production of canned fruits and vegetables. The manufacturing period was limited to a harvesting season. This ruling was apparently based on an administrative position begun in 1931 to assist an industry that had a limited period to canned fruits during a harvesting season. This ruling, which applies to manufacturers of canned fruits and vegetables that use a manufacturing period limited to a harvesting season, is still in effect.

Holding.—Manufacturers of orange juice products may designate for drawback imported merchandise of the required kind and quality which is received at any time during an approved manufacturing period not exceeding a harvesting season.

(C.S.D. 80-108)

Marking: No Exception to Country-of-Origin Marking Requirements for Accessories to Properly Marked Machines Already Imported

Date: September 21, 1979
File: MAR-2-05-R:E:E
710838 HS

This ruling concerns country-of-origin marking on accessories to machines which will only work on the imported machines for which they are imported.

Issue.—Whether an imported kit or accessory that is made especially for an already imported agricultural implement which is properly marked may be excepted from country-of-origin marking requirements under 19 U.S.C. 1304(a)(3)(H).

Facts.—Agricultural implements such as swathers, front-end loaders and tractors are imported from Canada and properly marked with their country of origin. A Customs broker questions whether it is necessary to mark accessories such as three-point hitches, pickups for the swathers or conversion kits for the combines that are also made in Canada and that are especially made for the agricultural implements for which they are imported.

Law and analysis.—Section 304 of the Tariff Act of 1930, as amended (19 U.S.C. 1304) provides, in general, that all articles of foreign origin imported into the United States must be legibly and conspicuously marked to indicate the English name of the country of origin to an ultimate purchaser in the United States.

There are, however, certain exceptions to the general rule. Among the exceptions are section 304(a)(3)(H) which provides that if an ultimate purchaser necessarily knows the country of origin of the article, either by reason of the character of the item or by the circumstance of its importation, the article need not be marked.

In the case of accessories or kits, the ultimate purchaser would be the retail consumer. The retail consumer would not necessarly know the country of origin of the accessories or kits by their character as accessories or kits to properly marked machines made in Canada. Modern manufacturing practices have made it impossible for one to be certain that an accessory or kit made for a machine made in one country necessarily comes from the same country as the machine.

For an exception to be granted under the "circumstances of its importation" language, direct contact is required between the ultimate purchaser and the foreign supplier ensuring that the order will be filled with articles from only one country, and the importer should be the ultimate purchaser.

In this case, the ultimate purchaser would not be the importer and there will not be direct contact. Accordingly, the section 304(a)(3)(H) exception is not applicable and the accessories and kits must be marked.

Holding.—Accessories and kits that are manufactured in the same country as the machine for which they are made may not be excepted from marking requirements under 19 U.S.C. 1304(a)(3)(H), even if the imported accessories or kits are made especially for the machines for which they are imported and the machines are properly marked.

(C.S.D. 80–109)

Country-of-Origin Marking: Coats with Label on Inner Facing

Date: September 21, 1979
File: MAR-2-05-R:E:E
710374 DB

This ruling concerns the country-of-origin marking on men's and women's coats imported from various foreign countries.

Issue.—Are coats properly marked to indicate the country of origin if the label is placed on the inner facing of the coat near the buttonholes or other fastening devices with brand name and country-of-origin label, rather than affixed to the neck area?

Facts.—An importer proposes to import men's and women's coats. The coats will be sold to various purchasers in the United States. The coats will be marked in the inside facing either on or in close proximity to the brand name label, rather than in the neckline or breast area. The labels are sewn in this location because labeling in the neckline or breast pocket area involves problems inherent in sewing a label into or on the lining, since the outerwear coats are lined. A variety of linings in coats are not conducive to carrying a label. Also, many coats have shells that are made of a sturdier fabric than the lining; therefore, marking on the facing is a more permanent place and manner of marking than placing the marking on the lining.

Law and analysis.—Section 304 of the Tariff Act of 1930 as amended (19 U.S.C. 1304) provides that all articles of foreign origin imported into the United States shall be legibly and conspicuously marked to indicate the English name of the country of origin to an ultimate purchaser in the United States. Section 134.46 of the Customs Regulations (19 CFR 134.46) provides in pertinent part that in any case where the name of any city or locality in the United States appears on an imported article or its container, there shall appear legibly and permanently in close proximity to such name, and at least a

324-900 O - 80 - 5

comparable size the name of the country of origin preceded by "made in," or "product of," or other words of similar meaning. Circular MAR-02-EV, July 2, 1958 (BCL No. 3036), ruled that wearing apparel such as coats, sweaters, etc. shall be marked by means of a fabric label or label made from natural or synthetic film sewn or otherwise permanently affixed on the inside center of the neck midway between the shoulder seams or in that immediate area. ORR ruling 638-69 dated January 2, 1979, in effect modified this ruling by holding that suit jackets, overcoats, sport coats may be marked to indicate the country of origin by means of a label affixed over or below the inside pocket if such marking is included on or is in close proximity to the brand name label affixed to coats in that area.

Holding.—Customs is of the opinion that marking the coats near the inner facing or near the buttonholes or fastening device is in compliance with 19 U.S.C. 1304, as long as the label is legible and conspicuously marked to indicate the country of origin. Also, the marking shall be in close proximity to the brand name label affixed to the garment.

(C.S.D. 80-110)

Classification: Carpet Cutter Blades; Blades or Parts of Cutting Tools

Date: September 21, 1979
File: CLA-2:R:CV:MA
061227 NL

This ruling concerns the tariff classification of technical blades, products of West Germany. Samples were submitted for examination.

Facts.—The submitted sample resembles in general appearance a safety razor blade. It is double-edged and has three holes cut in the middle of the blade and equidistant from each other. The blade measures approximately 2 inches long and is made of surgical steel. It is labeled by the manufacturer as the No. 186 blade.

Issue.—Whether the No. 186 blade is a part of the No. 304 carpet-cutter tool?

Law and analysis.—The protestant contends that the No. 186 blade is specially designed for use chiefly or solely on the No. 304 carpet cutter and is an essential, constituent part. Even if it is conceded that the carpet cutter is a cutting tool classifiable in items 651.29 or 651.31, Tariff Schedules of the United States (TSUS), we do not agree that the No. 186 blade is classifiable as a part of that tool. First, our own examination of the blade indicates that it is a general type of double-edged, three-holed industrial blade which can be used in a number of industrial knives. We further note that the importer's own catalog

advertises the No. 186 with other industrial blades as "Surgical steel blades with extra sharp edges to *fit Crain tools and other popular makes.*" [Italic added.] Second, the protestant has offered no evidence to show that the No. 186 blade is chiefly used in the No. 304 carpet cutter. Although he has contended that the carpet cutter has a special groove which is contoured to hold the No. 186 blade, we find that the groove may hold other industrial blades.

The protestant further contends that the No. 186 blades are advertised and sold exclusively as replacement blades for the No. 304 cutter. There is no evidence to support this claim.

However, even if we were to hold that the No. 186 blade is a part of the No. 304 cutter, it could not be classified under the provision for parts. General headnote 10(ij), specifies that a provision for parts of an article does not prevail over a specific provision for such part. Inasmuch as the No. 186 blade is a double-edged industrial knife blade, it is more specifically provided for under the provision for blades for knives, in item 649.85, TSUS, and cannot be classified under the provision for parts of other cutting tools in item 651.29 or 651.31, TSUS.

Holding.—The No. 186 knife blade is classifiable under the provision for blades, handles and other parts, in item 649.85, TSUS, and dutiable at the rate of 2.75 cents each plus 13.5 percent ad valorem.

(C.S.D. 80-111)

Country-of-Origin Marking: Whether the Assembly of Ceiling Fan Components Results in Substantial Transformation

Date: September 24, 1979
File: MAR-1-01-R:E:E
710564 EB

This ruling concerns the country-of-origin marking requirements that apply to ceiling fan components to be imported into the United States for assembly.

Issue.—Whether the domestic manufacturing processes through which imported ceiling fan components become finished fans constitute a substantial transformation of the components sufficient to warrant excepting the articles from country-of-origin marking requirements.

Facts.—An American manufacturer of ceiling fans proposes to import all the component parts of such fans, with the exception of industrial fasteners, to the United States, where the finished products will be manufactured. Production of the fans requires two separate

manufacturing processes, one for the motor unit and one for the blade assembly.

The ceiling fan motors are manufactured in a 20-step assembly line procedure. The I.D. of the armature is first washed and checked. The case is inspected for flaws, and a hydraulic press is used to press and install the shaft. The electrical field is inspected and installed. The subassembly is checked and the armature is attached prior to the installation of a cover. An electrical switch is installed, and the motor is tested further. The assemblies are then spray painted, and, after a final inspection, are packaged.

The manufacture of the fan blade assembly is a five-step process. The blade brackets are sorted and checked. Previously painted wood blades are attached to the brackets. The assemblies are weighed and checked for pitch, proper center line, and height of the plane. The painted finish is inspected and the assemblies are packaged.

The attorneys for the ceiling fan manufacturer assert that these processes constitute a substantial transformation of the ceiling fan components.

Law and analysis.—Section 304 of the Tariff Act of 1930, as amended (19 U.S.C. 1304), generally requires that all articles of foreign origin imported into the United States be marked to indicate their country of origin. The purpose of this requirement is to insure that the ultimate purchaser of imported articles is aware of the origin of the articles.

Section 134.35 of the Customs Regulations, however, provides an exception to the marking requirement when imported articles are subjected to further processing in the United States. When further processing results in a substantial transformation of the imported products, the domestic manufacturer or processor will be considered the ultimate purchaser of the imported products under the principle of *United States* v. *Gibson-Thomson, Inc.*, 27 C.C.P.A. 267 (C.A.D. 98). Under such circumstances, the imported articles need not be individually marked.

For purposes of applying section 134.35, substantial transformation is a process by which an imported article acquires a new use, name, or character. While it is not necessary that a new article be produced, the mere assembly of parts will not constitute a substantial transformation.

We do not believe that the facts of this case show that a substantial transformation of the foreign components occurs. The manufacturing processes as described are basically assembly line procedures. In general, they do not physically alter the components. The manufacturing processes as described do not require large amounts of skilled labor or specialized equipment. The cost of the manufacturing processes

relative to the cost of the components appears to be low. Finally, the imported components do not lose their identity by becoming an integral part of a new article. It is our opinion, consequently, that the manufacturing processes as described are mere combining processes that do not result in a substantial transformation of the component parts.

Therefore, we believe the marking exception outlined in 19 CFR 134.35 does not apply. The manufacturer of the ceiling fans cannot be considered the ultimate purchaser of the imported components.

Holding.—The manufacturing processes used to produce ceiling fans from foreign components do not, in this instance, constitute a substantial transformation of the imported parts. Consequently, the exception to individual marking set forth in section 134.35 of the Customs Regulations does not apply.

(C.S.D. 80-112)

Classification: Entireties; Candleholder, Candle Cups, and Wax Candles Used in Combination as Illuminating Article

Date: September 25, 1979
File: CLA-2:R:CV:MA
054756 LXL

This ruling concerns the protest filed against your decision classifying the parts of a candleholder from Hong Kong separately as follows: The iron base holder as illuminating articles of base metal, other, under item 653.39, Tariff Schedules of the United States (TSUS), eligible for entry free of duty from Hong Kong under the generalized system of preferences (GSP); the wax candles as candles and tapers, under item 755.25, TSUS, eligible for entry free of duty from Hong Kong under GSP; and the glass candle cups as articles chiefly used in the household, art and ornamental articles, other glassware, valued not over 30 cents each, under item 546.52, TSUS, dutiable at the rate of 50 percent ad valorem. The merchandise is covered by consumption entry No. 412816 dated May 20, 1977, which was liquidated on July 1, 1977.

The protestant claims that the metal candleholder, glass candle cups, and candles are classifiable as an entirety under illuminating articles of base metal, other, under item 653.39, TSUS, eligible for entry free of duty from Hong Kong under GSP.

The candleholder is a double-tulip-flower iron holder with glass cups and candles. The base is of iron with two stems which support two tulip-shaped holding devices. In the holding devices are glass candle cups with small wax candles placed in the cups. The base of the article is decorated with a plastic and textile bouquet.

It is the opinion of this office that the iron candleholder, glass cups, and wax candle would be classifiable as an entirety as illuminating articles of base metal, under item 653.39, TSUS, eligible for entry free of duty from Hong Kong under GSP.

Where all the entities in a combination are complete in themselves and are capable of a separate use, the unit is not an entirety, but where at least one of the entities has no separate commercial value or separate use, the combination is an entirety. *Chadwick-Miller Importers, Inc., et. al.* v. *United States*, 59 Cust. Ct. 529, C.D. 3221 (1967). Thus it must be determined whether the candleholder, glass cups and candles have separate commercial value or use. Other criteria for determining a question of entireties were set forth in *Davar Products, Inc.* v. *United States*, 61 Cust. Ct. 57, C.D. 3526, 287 F. Supp. 994 (1968). The *Davar* court noted as follows:

> The most recent decisions of this court also indicate that it is the independence of both components which is at issue in a dispute over whether an article is an entirety. The independence of both must have been established by showing either that they have other uses, are sold separately, or retain their individual identities.

There is no doubt that the wax candles have a separate commercial value and use and would retain their individual identities in sales without the other components. The glass cups have an ornamental value outside their use as candleholders. They would be able to withstand the test of retention of identity if sold separately. However, the iron holder has little value outside of this use with the other parts of this combination. It is highly questionable as to whether the iron holder could be sold separately. While it could be argued that other glass cups could fit into the tulip-type holders, any use with other cups would not be a readily attainable alternative use. The iron holder has no separate independence. Therefore, the combination is most correctly classifiable as an entirety.

Accordingly, the protest as to classification as an entirety under item 653.39, TSUS, should be allowed in full with an appropriate refund of duty as claimed.

(C.S.D. 80–113)

Marking: Country-of-Origin Marking Requirements for Leather Harnesses To Be Manufactured in Haiti from American Leather

Date: September 25, 1979
File: MAR-1-01-R:E:E
710960 EB

This ruling concerns the country-of-origin marking requirements

for certain leather products to be manufactured in Haiti from American leather.

Issue.—Whether certain leather harnesses to be manufactured in Haiti from American leather must be marked to indicate their country of origin if such harnesses are to be attached in the United States to bottles of domestic whiskey.

Facts.—An American company proposes to import certain leather harnesses from Haiti. The harnesses are to be produced from leather of U.S. origin, but the precise method of manufacture is unclear. The importer proposes to ship leather to Haiti for cutting and assembly, or, in the alternative to ship precut leather parts to Haiti for assembly only.

The completed harnesses will return to the United States for use as decorative handles on certain "powder horn" bottles containing domestic sour mash whiskey. Each harness consists of a circular leather collar, enclosed at the bottom, designed to fit around and beneath the base of the bottle, another collar which fits around the neck of the bottle, and a leather carrying handle connected at either end to the collars. The importer asserts that the combination of the harnesses with the bottles of domestic whiskey is sufficient to exempt the harnesses from individual country-of-origin marking.

Law and analysis.—Section 304 of the Tariff Act of 1930, as amended (19 U.S.C. 1304), generally requires that each article of foreign origin imported into the United States be marked to indicate its country of origin. The purpose of this provision is to insure that the ultimate purchaser of a foreign article has notice of the origin of that article.

For country-of-origin marking purposes, an article is said to be a product of the country in which the last substantial transformation of that article has occurred. In this case, the cutting and sewing operations in Haiti, or even the sewing operation alone, would constitute a substantial transformation of the leather or leather parts. The harnesses would, therefore, have to be marked to indicate Haiti as their country of origin unless they are otherwise excepted from the marking requirement.

Pursuant to section 134.35, Customs Regulations:

> An article used in the United States in manufacture which results in an article having a name, character, or use differing from that of the imported article, will be within the principle of the decision in the case of *United States* v. *Gibson-Thomsen Co., Inc.*, 27 C.C.P.A. 267 (C.A.D. 98).

Under this principle, a manufacturer who combines an imported article with other items to form a new or different article may be considered the ultimate purchaser of the imported article within the meaning of 19 U.S.C. 1304(a). In such a case, the article may be excepted from marking.

For this exception to apply, the imported article must generally be

an integral part of the new or different article that results from the combination process. Several factors are considered in determining what constitutes an integral part. The article may be an integral part if it is functionally necessary, rather than merely decorative or accessory. In *Diamond Match Co.* v. *United States*, 45 Cust. Ct. 198 (1960), wooden ice cream sticks were excepted from marking, since "the stick forms an integral part of the product without which it (the ice-cream-on-a-stick) could not function * * *." *Id.* at 208. The article might also be an integral part if it has little or no intrinsic value as a separate article of commerce. In *Diamond Match* and in *Grafton Spools, Ltd.* v. *United States*, 45 Cust. Ct. 16 (1960), the courts excepted ice cream sticks and typewriter ribbon spools, respectively, stating that ice cream and typewriter ribbons were the primary items of commerce. Furthermore, in *Grafton Spools*, the court determined that the process by which the spools and ribbons were combined was an indication that the spools were an integral part, since the combining process required skilled labor. *Id.* at 24. Finally, the court in *Diamond Match* considered it relevant that the ice cream sticks could not be removed from the final product without destroying the value of the product.

We do not believe the reasoning of *Diamond Match* and *Grafton Spools* supports an exception to the marking requirements for the leather harnesses in the instant case. The subject leather harness is easily attached to the whiskey bottle without resort to skilled labor or special machinery or techniques. It is apparently just as easily removed without destroying or even substantially reducing the value of the bottled whiskey. The harness is not functionally necessary to the marketing of the bottle whiskey; in fact, counsel for the importer has conceded that the harness is a mere "decorative adjunct." Finally, we believe that the harness retains its identity and has value as an independent item of commerce. Although the whiskey is to be considered the primary article of commerce, the harness appears to be basic enough in design to be used with any container of an appropriate size, and it seems to be easily removed from the original bottle for this purpose. Therefore, we believe the leather harness has a function and value as a carrier handle and decorative accessory for wine and whiskey bottles.

In these circumstances, the importer of the harnesses cannot be considered the ultimate purchaser. Accordingly, each harness much be permanently, conspicuously, and legibly marked to indicate Haiti as the country of origin.

Holding.—Leather harnesses assembled in Haiti of United States leather are products of Haiti for country-of-origin marking purposes. The subsequent attachment of the harnesses to bottles of domestic whiskey is not a transformation sufficient to exempt the harnesses

from individual country-of-origin marking. Consequently, each harness shall be marked in accordance with the Tariff Act of 1930, as amended (19 U.S.C. 1304), to indicate Haiti as its country of origin.

(C.S.D. 80-114)

Marking: Exception to Country-of-Origin Marking Requirements for Asbestos Cement Pipe Tubes To Be Further Manufactured Into Finished Pipe Following Importation

Date: September 26, 1979
File: MAR 2-05-R:E:E
711081 HS

This ruling concerns country-of-origin markings on asbestos cement pipe tubes imported from Mexico.

Issue.—Whether raw asbestos cement pipe tubes imported from Mexico which are further manufactured into finished pipe in the United States may be exempt from marking under section 304(a)-(3)(H) of the Tariff Act of 1930, as amended.

Facts.—Petitioner is a manufacturer of asbestos cement pipe for water and sewer applications in the United States. It has an ownership interest in the company from which it imports the raw asbestos tubes. The petitioner converts all of the imported tubes into finished pipe in the United States and has no intention of selling the tubes to other producers for conversion.

The cost of the process by which the raw tubes are converted is a major portion of the total manufacturing cost incurred in producing an asbestos cement pipe. The process involves machining, testing, and coupling.

Machining consists of trimming the tubes at each end by a lathe to square off the rough edges so that the surfaces are even and the tubes are of a uniform length about their inner and outer circumferences.

After both ends have been trimmed, they must be further machined so that a coupler may be fitted to form a sealed coupling in compliance with industry specifications. This machining consists of reducing the tube's outer diameter in a two-step process resulting in a smooth finish so that the coupler can be fitted on the end, and beveling each end to enable the coupling to be placed on the end without damaging the sealing ring, which is inside the coupling. An internal bevel is also made to remove any loose or hanging chips of material.

Testing consists of following procedures established by the American Society for Testing and Materials (ASTM). A hydro test, flex test and crush test are all required. The hydro test involves sealing both ends of every pipe, purging the air while filling with water, and pressure

testing to an ASTM value based on the class of pipe. The flex test involves loading the pipe at a uniform rate by a three-point loading method and making sure the pipe can bear the load. The crush test involves placing a sample of the pipe in a tester which applies a load at a uniform rate until the piece breaks.

Coupling involves treating the surface of the pipe end with a lubricant and force fitting the coupling into the end. The couplings and rubber sealing rings within them are of U.S. manufacture and are placed on the pipe at the petitioner's plant so that the finished pipe is completely ready for installation in the field.

Law and analysis.—Section 304 of the Tariff Act of 1930, as amended (19 U.S.C. 1304), provides in general that all articles of foreign origin imported into the United States must be legibly and conspicuously marked to indicate the English name of the country of origin to the ultimate purchaser in the United States.

There are, however, certain exceptions to the general rule. Among the exceptions is section 304(a)(3)(H) which provides that if an ultimate purchaser, by reason of the circumstances of its importation or by reason of the character of the articles, necessarily knows the country of origin of the article, the article need not be marked to indicate its origin.

19 CFR 134.35 provides that an article used in the United States in manufacture which results in an article having a name, character, or use differing from that of the imported article, will be within the principle of the decision in the case of *United States* v. *Gibson-Thomson Co., Inc.* 27 CCPA 267 (C.A.D. 98). Under this principle, the manufacturer or processor in the United States who converts or combines the imported article into the different article will be considered the ultimate purchaser of the imported article within the contemplation of section 304(a), Tariff Act of 1930, as amended (19 U.S.C. 1304(a)).

In *Midwood Industries, Inc.* v. *United States* 64 Cust. Ct. 499, it was held that a United States manufacturer would be considered the ultimate purchaser if, as a result of the process that he performs on the item, the item is substantially transformed into a new and different item, having a new name, character and use. Substantial transformation occurs when imported items are changed by domestic processing from producer's goods, items that are neither used by nor capable of use by the retail consumer, into consumer's goods. In making the determination of whether substantial transformation occurs, the factors considered include the extent of the further manufacturing involved; the time, the cost, the other materials involved; and the machining and skills required to complete the manufacturing process.

In this case, the raw asbestos cement tubes are of no use to a retail consumer; they are clearly producer's goods. As the process by which

the raw tubes are converted is an operation which requires accurate machining by skillful machinists, and the cost of the process is a major portion of the total manufacturing cost, substantial transformation has occurred, making the petitioner the ultimate purchaser of the raw asbestos cement tubes.

For the 304(a)(3)(H) exception to marking to apply, it must be shown that the ultimate purchaser necessarily knows the origin of the goods by reason of the circumstances of their importation or by reason of the character of the articles. In this case, as the petitioner owns an interest in the company from which it imports the raw tubes and orders the new tubes directly from that company, it is clear that the petitioner necessarily knows the country of origin of the tubes by reason of the circumstances of their importation.

Holding.—The petitioner is the ultimate purchaser of the raw asbestos cement tubes and necessarily knows the origin of the goods due to the circumstances of their importation. Accordingly, the tubes may be excepted from individual marking pursuant to 19 U.S.C. 1304(a)(3)(H).

(C.S.D. 80–115)

Marking: Exception to Country-of-Origin Marking Requirements for Price-Marking Labels and Tags Imported in Marked Cartons

Date: September 26, 1979
File: MAR 2–05 R:E:E
711156 CSB

This ruling concerns the country-of-origin marking requirements of price-marking labels and tags.

Issue.—Whether the labels/tags may be excepted from individual country-of-origin marking, on the grounds that their size generally allows insufficient space for such wording.

Whether a label on the outer and inner cartons indicating the country of origin will satisfy U.S. Customs marking requirements.

Facts.—The product range consists of price-marking labels and tags for use by major retail department store groups. The product consists of either self-adhesive labels or carton tags, incorporating a magnetic strip which ultimately will carry product information as designated by the customer, the retail store. The labels and tags are available in a variety of sizes to customer designs, ranging from the smallest, which is 1 inch by 1 inch to the largest which is 2 inches high by 3 inches wide.

These labels are printed in a variety of colors, styles and designs (but can also be plain, though this is unusual) according to the desires and marketing image of the customers.

The labels/tags will be delivered in reels of 2,000 to 8,000 labels/tags per reel depending on the label/tag size. The customer, retail store, uses his computer equipment to add substantial information on these labels/tags relating to the products that he is selling. Such products can range from furniture, through fashion apparel, to small household items. This information is both printed above and below the magnetic strip. This and other information is encoded in the magnetic strip. Different customers have different requirements for encoding more or less information onto each label/tag.

The labels/tags are then attached to the goods to be sold by the retail department store. Product details and prices are recorded automatically at the point of sale to assist the store in efficiently controlling its stocks and management information.

The labels are invariably destroyed by the end customer as being of no further value once the sale has been made.

The method of packaging consists of enclosing each roll of tickets within a polythene bag and packaging up to 12 rolls in an inner carton, which is duly labeled to show a physical example of the contents together with a verbal description. Up to 45 of these inner cartons are packaged in a large outer carton strapped to a wooden pallet. This outer carton also carries a similar product description label, but normally no sample of the individual labels/tags contained in the inners.

Law and analysis.—Section 304 of the Tariff Act of 1930, as amended (19 U.S.C. 1304), requires that every article of foreign origin (or its container) imported into the United States shall be marked in a legible and conspicuous manner to indicate the English name of the country of origin to the ultimate purchaser in the United States, with certain exceptions.

In accordance with section 134.1(d), Customs Regulations, the ultimate purchaser of an imported article is the last person in the United States who will receive the article in the form in which it was imported. The ultimate purchaser of the labels/tags, in this case, is the importer (retail department store groups).

However, the labels/tags may be excepted from marking under 19 U.S.C. 1304(a)(3)(D), if the marking of a container or the article will reasonably indicate the origin of such article. The Customs officers at the port of entry must be satisfied that the labels/tags will reach the ultimate purchaser in the marked container.

Holding.—The price marking labels and tags packaged in reels to be sold by the carton to retail department store groups may be marked to indicate the country of origin by labeling the outermost carton which reaches the ultimate purchaser with the name of the country

or origin. The individual labels and tags may be excepted from country-of-origin marking pursuant to 19 U.S.C. 1304(a)(3)(D).

The declaration "made in (name of country)" will satisfy the requirements of 19 U.S.C. 1304, provided the marking is legible and conspicuous and the labels/tags will reach the ultimate purchaser in the imported cartons.

(C.S.D. 80–116)

Carrier Control: Use of Foreign-Built Crane Vessel in U.S. Waters

Date: December 3, 1979
File: VES–10–RRUCDC
104308 DR

This ruling concerns the use of a foreign-built sheerleg (crane) vessel (hereinafter referred to as vessel) in various activities in U.S. waters.

Issues.—Salvage-wreck removal operations.—(a) So long as the vessel remains under foreign flag, may it only engage in salvage/wreck removal operations outside U.S. territorial waters?

(b) (1) May the vessel be documented under the laws of the United States; and, if so,

(2) May the vessel, when so documented, engage in salvage and wreck removal in U.S. territorial waters?

(c) Once the vessel is documented under the U.S. flag, may it be towed between points embraced within the coastwise laws only by U.S.-flag vessels?

(d) While the vessel is under foreign flag, may it be towed between points embraced with the coastwise laws by foreign-flag vessels?

I. Is a point on the surface adjacent to the site within territorial waters of a vessel to be salvaged or a wreck to be removed a point embraced within the coastwise laws of the United States?

II. Is a point on the surface adjacent to the site outside territorial waters of a vessel to be salvaged or a wreck to be removed, but in waters over the Outer Continental Shelf, a point embraced within the coastwise laws of the United States?

III. Will any activity of the vessel in salvage/wreck removal work at a site in territorial waters be considered a use in coastwise trade?

IV. May the vessel, if documented as a vessel of the United States, be maneuvered by a U.S.-documented tug about a jobsite with crewmembers or salvaged items on board?

Construction/loading operations.—(a) May the vessel, whether documented under the U.S. flag or a foreign flag, be used in heavy lift activities at bridge construction or at vessel-loading sites in territorial

waters, provided the vessel is moved with only crewmembers or merchandise of de mimimis value on board?

(b) May the vessel, while under foreign flag, be towed between points within the territorial jurisdiction of the United States by a foreign-built, foreign-flag tug?

(c) Once the vessel is documented under the U.S. flag may it be towed between points embraced within the coastwise laws only by U.S.-flag vessels?

I. Will the operation of the vessel's crane to load components for a bridge from the shore onto a transporting vessel and, after the vessel is towed to the construction site, to lift the components off the transporting vessel and into place on the bridge be considered a use in the coastwise trade?

II. May the vessel, regardless of whether it is documented under foreign or U.S. flag, be maneuvered in the vicinity of the construction site, with only crewmembers on board and with construction components suspended in air by the crane?

III. May the vessel, regardless of whether it is documented under foreign or U.S. flag, be maneuvered in the vicinity of the vessel to be loaded with the bridge components, with only crewmembers on board and with the construction components suspended in air by the crane?

Facts.—A foreign corporation owns a foreign-documented, non-self-propelled sheerleg vessel (similar to a crane or derrick barge) which it proposes to use in salvage and wreck-removal operations in both U.S. territorial waters and on the high seas, and in bridge construction operations.

With respect to salvage and wreck removal, the vessel would be towed to the jobsite with the only persons on board being those necessary to the operation of the vessel. At the site, the crane will lift the article to be removed and place it on board a barge for transportation to the article's place of destination. The vessel itself will not be used for the transportation of any recovered article. During the course of the operation it may be necessary to maneuver the vessel within the immediate vicinity of the jobsite with an article suspended from the crane in order to better set the article on the transporting barge.

With respect to bridge construction/loading operations, the vessel would be towed from either its shore base or from another jobsite to a pier, from which the crane will remove components for use in building the bridge and load the component onto a barge qualified to engage in coastwise trade. Both the vessel and the barge would then be moved to the site of the bridge construction. The crane would then lift the component from the barge and into place on the bridge. During the course of the second lifting operation, it may be necessary to maneuver

the vessel, while the component is suspended from the crane, into a position from which the crane can lower the component into place.

It is also proposed to use the vessel to load heavy cargo, such as locomotives, onto other vessels for shipment. This would be accomplished by towing the vessel alongside the pier where the transporting vessel is being loaded. The crane would then lift the cargo from the pier onto the transporting vessel. During the course of this loading operation, it may be necessary to maneuver the vessel while the cargo is suspended from the crane in order to facilitate loading.

Law and analysis.—(A) Pursuant to the provisions of 46 U.S.C. 316(d), a foreign-flag vessel is prohibited from engaging in salvage operations in U.S. territorial waters. The territorial waters of the United States include the

> * * * harbors, bays and other enclosed arms of the sea along its coast, and a marginal belt of the sea extending from the coastline outward a marine league, or three geographical miles. * * * *Cunard Steamship et al.* v. *Mellon, et al.*, 262 U.S. 100 (1923).

The prohibition of section 46 U.S.C. 316(d) applies explicitly to foreign vessels, not to foreign-built vessels. Accordingly, it would not apply to a foreign-built vessel which is documented under the laws of the United States.

(B) Pursuant to the provisions of 46 U.S.C. 316(a), it is unlawful for a vessel, other than a vessel documented under the laws of the United States, to tow another vessel, other than a foreign vessel, between points embraced with the coastwise laws of the United States.

(C) A geographical point within United States territorial waters is a point in the United States and hence a point embraced within the coastwise laws of the United States.

(D) The Outer Continental Shelf is not considered to be U.S. territory for the purposes of the coastwise laws, although artificial structures placed on the shelf for the purpose of extracting natural resources from the shelf are within the coastwise laws.

(E) The mere loading and unloading of articles or the transfer of articles from one point to another in territorial waters by a crane are not considered a transportation in the coastwise trade provided the vessel on which the crane is located is not moved between points in territorial waters while the articles are held by the crane.

(F) The sole use of a crane barge in lifting and depositing articles at a fixed site in the territorial waters of the United States is not considered coastwise trade and such activity would not be prohibited by any law administered by the Customs Service.

(G) The mere movement in territorial waters of a crane barge incidental to the lifting and depositing of articles at the site of the lifting operations would not be deemed coastwise trade.

(H) The movement of a vessel, with its crew, equipment, and stores, from one point embraced within the coastwise laws to another such point is not considered coastwise trade provided the vessel does not take on board passengers or merchandise at one point and discharge the passenger or merchandise at another such point. Crewmembers are not considered passengers under 46 U.S.C. 289, and the legitimate equipment and stores of the vessel, and articles of de mimimis value which may be discharged at the second point incidental to the operation of a vessel such as a crane barge are not considered merchandise within the meaning of 46 U.S.C. 883.

Holdings.—Salvage-Wreck removal operations.—(a) A foreign-flag vessel may not engage in salvage or wreck removal activities within the territorial waters of the United States. (A)

(b)(1) The documentation of vessels is a matter within the authority of the U.S. Coast Guard.

(2) The Customs Service administers no law which would prohibit salvage or wreck removal activities in U.S. territorial waters by a vessel of the United States. (A)

(c) A vessel documented under the laws of the United States may be towed between points embraced within the coastwise laws only by a U.S.-flag vessel, properly documented. (B)

(d) A foreign-flag vessel may be towed between points embraced within the coastwise laws by a foreign-flag vessel. (B)

I. A point on territorial waters adjacent to the site of a vessel to be salvaged or a wreck to be removed is a point embraced within the coastwise laws. (C)

II. A geographical point outside territorial waters, although over the Outer Continental Shelf, is not a point embraced within the coastwise laws. (D)

III. The activities of the vessel, as described under "Facts," would not be considered a use in the coastwise trade. (E) and (F)

IV. The incidental maneuvering of the vessel by a U.S.-documented tug in the immediate vicinity of the job site, with crewmembers on board and with the salvaged or wreck items suspended in air by the crane, would not be considered coastwise trade. (G)

Bridge construction/loading operations.—(a) The vessel, whether documented under U.S. flag or foreign flag, may be moved from one point to another within the territorial jurisdiction of the United States during the course of the activities described, without being in violation of the coastwise laws. (H)

(b) The vessel may, while under foreign flag, be moved between points adjoining or in U.S. territorial waters by a foreign-flag tug. (B)

(c) The vessel, if documented under the U.S. flag, may be moved

between points on or in U.S. territorial waters only by a vessel of the United States. (B)

I. The activities of the vessel, as described under "*Facts*," would not be considered a use in the coastwise trade. (E), (F), and (G), (H)

II. The incidental maneuvering of the vessel by a qualified tug in the immediate vicinity of the jobsite, with crewmembers on board and with construction components suspended in air by the crane, would not be considered coastwise trade. (G)

III. The incidental maneuvering of the vessel by a qualified tug in the immediate vicinity of the vessel to be loaded (or inloaded), with crewmembers on board and with articles of cargo suspended in air by the crane, would not be considered coastwise trade. (G)

Dutiability.—Pursuant to general headnote 5(e), Tariff Schedules of the United States (19 U.S.C. 1202), vessels which are not pleasure boats are not subject to the provisions of the schedules and, hence, are not dutiable.

Navigation laws.—A report must be made at the nearest customhouse within 24 hours of the arrival at a U.S. port or place of a U.S.- or foreign-flag vessel from a foreign port or place, or of a foreign-flag vessel from another domestic port or place (including a geographical point within territorial waters). (See 19 U.S.C. 1433.)

The master of a U.S.-flag vessel arriving in the United States from a foreign port or place is required to make entry within 48 hours. (See 19 U.S.C. 1434.)

The master of a foreign-flag vessel arriving at a port in the United States from either a foreign port or another U.S. port is required to make entry within 48 hours. (See 19 U.S.C. 1435.)

Generally, a vessel must make entry at a Customs port of entry. (See 19 U.S.C. 1447.)

Clearance is required for a vessel to proceed from the United States to a foreign port or place. (See 46 U.S.C. 91.) Clearance is not required for a vessel to proceed to a point on the high seas.

The master of a foreign-flag vessel is required to obtain a permit to proceed between U.S. ports or between a U.S. port and a point in U.S. territorial waters. (See 46 U.S.C. 313, 314.) In view of the nature of the proposed operations and the impracticality of strict compliance with the requirement for obtaining and delivering permits, it will be deemed sufficient compliance with Customs controls if vessels subject to the permit to proceed requirements obtain a permit from a U.S. port to proceed to either that same port or to another U.S. port via the site of the salvage operation, construction, or loading operation.

(C.S.D. 80-117)

Marking: Country-of-Origin Marking of Paper Cups Imported in Full Case Lots

Date: September 27, 1979
File: MAR-2-05 R:E:E
709989 JB

This ruling concerns country-of-origin marking of paper cups imported in full case lots.

Issue.—Are the individual paper cups required to bear country-of-origin marking where the inner bottom rim of the cups indicates the name and address of the U.S. distributor?

Facts.—The paper drinking cups are imported by a wholesale distributor in case lots with its name and address on the inner bottom rim of each cup. The cases or outer containers are marked to indicate the country of origin. The cups are sold by the U.S. distributor (importer) only in case lots to purchasers which fill the empty cups with their products.

Law and analysis.—The ultimate purchaser of ordinary or usual containers which are imported empty to be filled in the United States is the company which fills them with its products, if the containers are ordinarily thrown away after being emptied (19 CFR 134.24(c)(1)). The articles may be excepted from country-of-origin marking if the outer containers are marked to indicate their origin. If, however, the individual containers or cups are marked to include the name and address of the U.S. distributor or the company which fills the cups with its products, 19 CFR 134.46 requires that the country of origin be shown in close proximity thereto preceded by "made in," or "product of," or other words of similar meaning.

Holding.—Individual containers or cups bearing the name and address of the U.S. distributor or the company which fills the cups with its products must be marked to indicate the country preceded by "made in," or other words of similar meaning in proximity to the company name and address (19 CFR 134.46). If, however, individual containers bear the name but not the address of the United States distributor or dispenser and do not bear the words or letter "United States," "American," or "U.S.A.," or any variation thereof, the individual items may be excepted from origin marking if the outer containers or packages are marked to indicate the country of origin.

(C.S.D. 80-118)

Reliquidation: Fittings from Israel Accorded Duty-Free Status by Executive Order

Date: September 27, 1979
File: ENT-1-01 R:E:E
711261 MK

This refers to your letter of August 20, 1979, concerning the interpretation of Executive Order 12032, of December 27, 1977. A provision in that order accorded GSP duty-free status to fittings imported from Israel classified under item 613.18, TSUS, and was made effective with respect to articles that were imported on or after January 1, 1976, and entered for consumption, withdrawn from warehouse for consumption, on or after March 1, 1977.

The Regional Commissioner at New York City denied requests for reliquidation filed more than 1 year after the dates of liquidation, holding that no authority to reliquidate existed under sections 514 or 520(c)(1), Tariff Act of 1930, as amended. You contend that the Executive order authorized reliquidation of entries regardless of the time limits on reliquidation which these sections impose.

In reviewing the matter, we conclude that the provisions of section 514 of the tariff act are controlling, notwithstanding the effective date of the Executive order. Presumably, the President is aware of existing law, and would not issue an Executive order which is contrary to such law. The Executive order provided only for duty-free treatment of the fittings, but did not authorize Customs to reliquidate dutiable entries, the liquidation of which had become final by operation of law.

For the foregoing reasons, we conclude that the Regional Commissioner's action was legally correct.

(C.S.D. 80-119)

Marking: Country-of-Origin Marking of Electrical Adaptor Plugs

Date: October 1, 1979
File: MAR-1 R:E:E
711262 MC

This ruling concerns the country-of-origin marking of electrical adaptor plugs which contain the words "England" and "U.S.A." on the receptacle end.

Issue.—Whether the country-of-origin marking of an adaptor plug must be in close proximity to the words "England" and "U.S.A." where the sole purpose for the appearance of these words is to alert the users that plugs of either of these two countries can be inserted into the receptacle end.

Facts.—A notice of redelivery has been issued with respect to a shipment of electrical adaptor plugs. On the end of the plug from which the two European-type electrical prongs protrude are die cast the name of the manufacturer, a design and the words "Made in France." The opposite end of the plug is the receptacle end and the words "England 04 04.8 U.S.A." appear there in order to indicate to the users that either the English- or American-type plugs can be inserted.

Law and analysis.—Section 134.11 of the Customs Regulations requires that

> every article of foreign origin (or its container) imported into the United States shall be marked in a conspicuous place as legibly, indelibly, and permanently as the nature of the article (or container) will permit, in such manner as to indicate to an ultimate purchaser in the United States the English name of the country of origin of the article.

Section 134.46 of the Customs Regulations further imposes the requirement that where the letters "U.S.A." or any variation of the name of a foreign country other than the country of origin appears, the markings of the country of origin must be in close proximity and in at least a comparable size to those words. The rationale behind this regulation is to avoid misrepresenting for or confusing the ultimate purchaser as to the actual country of origin of the article.

The words "Made in France," die cast here, clearly comply with section 134.11. We are also of the opinion that since the designation "England 04 0.4.8 U.S.A." is placed only to alert the consumer as to what plugs may be inserted, and the likelihood of confusion as to the actual country of origin is minimal, the requirements of section 134.46 shall not be imposed.

Holding.—The country-of-origin marking of an adaptor plug on the opposite end from which the designation "England 04 04.8 U.S.A." appears, complies with Customs marking requirements. The notice for redelivery should be canceled. A copy of this ruling should be furnished to the importer.

(C.S.D. 80-120)

In-Bond: Consolidated Cargo Shipments In Transit from One U.S. Port to Another Through Contiguous Country

Date: October 2, 1979
File: ENT-1-01-R:E:E
710664 M

This ruling concerns a proposed method of clearing and entering foreign merchandise from Canada at one U.S. port, and then shipping

that merchandise by means of the in-transit procedures from that U.S. port, back through Canada, to another U.S. port.

Issue.—Should the in-transit procedures of part 123, Customs Regulations (19 CFR, part 123) be authorized for permitting consolidated cargo shipments of foreign merchandise, immediately after such shipments have been transported from Canada and entered and cleared at a U.S. port of entry, to be transported from that port of entry, back through Canada, to another U.S. port of entry?

Facts.—It is proposed that consolidated cargo shipments originating in Toronto and destined for Los Angeles be brought by truck from Toronto to Buffalo for examination, clearance and entry. The merchandise will be in airline containers. After the merchandise is examined and entered, the containers holding the merchandise will be sealed. At Buffalo, an in-transit movement will be requested and Customs form 7512–B executed and a U.S. Customs officer will certify the original in-transit manifest which is forwarded with the container and the truck crossing the border, along with a copy of the entry summary filed at Buffalo. All Canadian Customs regulations will be complied with. The sealed container is transshipped at Toronto to a Canadian aircraft destined for Los Angeles. Upon arrival at Los Angeles, a U.S. Customs inspector insures that the seals are intact and releases the merchandise inside the container. It is contended that the purpose of such procedure is to expedite the clearance and release of the merchandise at the final port of destination.

Law and analysis.—19 U.S.C. 1554 provides that:

> With the consent of the proper authorities, imported merchandise in-bond or duty-paid, and products and manufactures of the United States may be transported from one port to another in the United States through contiguous countries, under such regulations as the Secretary shall prescribe, unless such transportation is in violation of R.S. 4347, section 883 of title 46 or section 1588 of this title.

Customs has ruled that the in-transit procedures of part 123 are applicable to a movement partially made by air.

In addition to the usual Customs clearance and entry at the initial U.S. port of entry, additional paperwork would be required for immediately shipping the merchandise in transit to another U.S. port via Canada. This would place an additional administrative and operational burden on Customs officers at this port, even though it would simplify the Customs clearance of the merchandise at the final U.S. port of entry. The Customs Service is of the opinion that any possible reduction of total time involved in the Customs clearance of the merchandise, and that may only be hypothetical, would not justify the additional paperwork and supervisory controls that would be required by Customs at the initial port of entry.

Holding.—The in-transit procedures of 19 CFR, part 123 are not authorized for consolidated cargo shipments of foreign merchandise, immediately after such shipments have been transported from Canada and entered and cleared in the United States, to be transported from that port of entry, back through Canada, to another U.S. port of entry.

(C.S.D. 80–121)

Vessels: Use of a Foreign-Built Barge as a Power Source for Offshore Dredging Equipment

Date: October 3, 1979
File: VES–10–02–R:CD:C
104256 PH

This ruling concerns the use of a foreign-built barge as a power source for offshore dredging equipment.

Issue.—Whether a foreign-built barge may lade fuel at a U.S. port which it will transport to a dredging project in U.S. waters and use to power the generators on board the barge. The power from the generators will be used to operate offshore dredging equipment.

Facts.—The owner of the (name of barge), a barge of Panamanian registry which was constructed in Singapore, contemplates documenting the barge under the U.S. flag and using it in dredging projects in U.S. coastal and inland waters. The barge will voyage to and from U.S. ports to obtain fuel which will be used solely to operate the power generators on board the barge. The power from the generators will be supplied to offshore dredging equipment. The barge will be drydocked in a U.S. port from time to time.

Law and analysis.—Section 883 of title 46, United States Code, prohibits a foreign-built vessel from transporting merchandise between points in the United States, including points within territorial waters or within a harbor. Legitimate equipment and stores of a vessel for its use are not considered merchandise within the purview of section 883.

Fuel to be used to power the generators on board the barge would be considered a part of the legitimate stores of the barge. Therefore, the lading at a U.S. port of fuel which will be used solely to operate the barge's power generators and the proceeding of the barge, with that fuel on board, to a dredging project in U.S. coastal or inland waters would not be a violation of section 883.

We assume that the dredges to which the barge would supply power are U.S.-built, as required by section 292, title 46, United States Code, if they are to be used in the United States.

There would be no objection to drydocking the barge in a U.S. port.

Holding.—The proposed use of the foreign-built barge, including the transportation from a U.S. port to a dredging site in U.S. waters of fuel to be used to operate generators on board the barge which will provide power for dreding operations, does not violate the U.S. coastwise laws.

(C.S.D. 80-122)

In-Bond Carriers and Cartmen: Effect of 19 CFR 125.14, As Amended, on Existing Cartage Contracts

Date: October 3, 1979
File: CAR-1-R:E:E
711002 SO

This ruling concerns the effect, if any, upon the provisions of existing cartage contracts in the Houston region concerning reimbursement for costs incurred in transporting unclaimed merchandise, brought about by the issuance of T.D. 78-151, which amends section 125.14 of the Customs Regulations (19 CFR 125.14).

Issue.—Would the change in 19 CFR 125.14, effective May 31, 1978, which makes it clear that the expenses for cartage of unclaimed merchandise shall be paid by the U.S. Customs Service, have any retroactive or prospective effect upon existing cartage contracts in the Houston region which provide that the contract cartman shall be reimbursed for these expenses from the proceeds of sale of unclaimed merchandise.

Facts.—The amendment to 19 CFR 125.14 was promulgated to clarify the fact that the provision of 19 CFR 125.11(c), that the cost of cartage of merchandise in Customs custody designated for examination at the public stores shall be paid from the appropriation "Salaries and Expenses; U.S. Customs Service," will also be applicable to the cartage of unclaimed merchandise. The question was raised as to the effect of this clarifying amendment upon existing cartage contracts in the Houston region which provide that the expense of carting unclaimed merchandise shall be borne by the contract cartman, who would be reimbursed from the proceeds of sale of the unclaimed merchandise. The existing contracts also provide that the risk of loss, in the event that the proceeds from the sale of unclaimed merchandise are insufficient to cover the cartage costs, also will be borne by the contract cartman.

A request from a contract cartman for disclosure of information concerning how the proceeds from Customs sales of unclaimed merchandise were distributed for the last 5 years, received by the Houston region, may result in an attempt by the cartman to recoup cartage

costs that were not fully reimbursed from the proceeds of sale. Since the possibility exists that the contract provision regarding liability for losses incurred may be contrary to regulations, the question was raised as to whether the contract provision or the regulations would be controlling in the event the anticipated claims are received.

Law and analysis.—The amendment to 19 CFR 125.14 was promulgated to clarify the fact that the expenses for cartage of unclaimed merchandise shall be paid from the appropriation "Salaries and Expenses; U.S. Customs Service." It is noted that (1) the cartage contracts in question were negotiated while the old regulations were in effect; (2) the old regulation, 19 CFR 125.14, was ambiguous with regard to payment of cartage costs for unclaimed merchandise; (3) the contracts were negotiated in accordance with existing policy guidelines for cartage contracting; (4) the rates provided in the contract for payment of cartage costs were negotiated with the realization that, in a number of instances, the cartman would not receive sufficient payment from the proceeds of sale of unclaimed merchandise to fully cover the cartage costs, and (5) to provide retroactive reimbursement of full cartage costs at this time would unjustly enrich the cartage contractor in view of the fact that, under the terms of the contract, the negotiated rate was set at a higher figure to allow for the fact that the cartman bears the risk of loss in failing to recoup the full cartage cost of merchandise eventually sold at auction.

Holding.—For the above-mentioned reasons, we are of the opinion that the amendment to 19 CFR 125.14 was intended to have prospective effect only, and was not intended to modify retroactively, the terms of existing contracts negotiated by Customs with bonded cartmen. Accordingly, additional claims for reimbursement for cartage costs not provided by the terms of the contract shall be denied.

(C.S.D. 80–123)

Marking: Country-of-Origin Marking of Cigarette Lighters and Their Containers

Date: October 5, 1979
File: MAR-1 R:E:E
711323 MC

This ruling concerns the country-of-origin marking of cigarette lighters and their containers.

Issue.—Whether the various country-of-origin markings on cigarette lighters, cases, and cartons sufficiently comply with Customs marking requirements.

Facts.—Butane pocket lighters are manufactured in Japan with the designation "Japan" die-stamped on the bottom, near the name of the

manufacturer. The lighters are received in West Germany where they are packaged in black plastic cases bearing the words "Case made in West Germany." The cases are then placed into red slip cartons. These cartons feature the name of the company, its German address (including the word "Germany") and the words "Printed in West Germany." The final export or shipping carton will bear a notation as to the Japanese origin of the lighter.

Law and analysis.—Pursuant to section 304, Tariff Act of 1930, as amended (19 U.S.C. 1304), section 134.11 of the Customs Regulations

> requires that every article of foreign origin (or its container) imported into the United States shall be marked in a conspicuous place as legibly, indelibly and permanently as the nature of article (or container) will permit, in such manner as to indicate to an ultimate purchaser in the United States the English name of the country of origin of the article.

The word "Japan" as it appears on the lighter itself is in compliance with this regulation. In addition, the marking of the plastic case, "Case made in West Germany," also meets the requirements of section 134.11.

A problem is posed with respect to the markings on the red slip carton. Customs Regulations section 134.46 provides, in relevant part, that where

> the name of any foreign country or locality other than the country or locality in which the article was manufactured or produced, appear(s) on an imported article or its container, there shall appear, legibly and permanently, in close proximity to such words, letters or name, and in at least a comparable size, the name of the country of origin preceded by "made in," "product of," or other words of similar meaning.

The purpose of this requirement is to avoid misleading the ultimate purchaser as to the true origin of the item itself.

We are of the opinion that the ultimate purchaser may be easily mislead by the present markings on the slip carton. The words "Printed in W. Germany" and the German name of the company, its German address, including the word "Germany," appear on the carton without any reference to the Japanese origin of its contents. Once the carton is opened a German box appears and it is only if the lighter itself is carefully examined that the word "Japan" becomes visible. The Japanese notation on the export carton is irrelvant since it is never shown to the ultimate purchaser. Thus, we are of the opinion that in order for the purpose and substance of section 134.46 to be met, a marking such as "Product of Japan" must appear on the red carton.

Holding.—The cigarette lighters and plastic containers are correctly marked. The red slip carton fails to comply with section 134.46 and should not be permitted entry as it currently exists.

(C.S.D. 80-124)

Valuation: Application of Transaction Value under the Trade Agreements Act of 1979 to Item 807.00 Appraisement

Date: May 15, 1980
File: CLA-2:R RUCV
542106 TLL
TAA #2

DISTRICT DIRECTOR OF CUSTOMS,
Laredo, Tex.

DEAR SIR: This is in reply to your memorandum dated March 11, 1980, requesting guidelines for the use of transaction value under the Trade Agreements Act of 1979 (TAA) for merchandise assembled under item 807.00, Tariff Schedules of the United States.

First of all, the Customs Service contemplates consideration of the applicability of transaction value, as set forth in section 402(b), as amended, by the title II of the Trade Agreements Act of 1979, to each importation subject to item 807.00. Thus, transfer prices between the parties will serve as a starting point for item 807 appraisement. To this will be added or deducted all permissible adjustments under section 402(b). Then all necessary adjustments to reflect the item 807.00 classification will be made. At that point, if the transaction value is otherwise acceptable under the provisions of section 402(b)(2)(A), then if the transactions are between related parties, the transaction value will be subject to section 402(b)(2)(B) for determination of its acceptability. If the transaction meets these conditions, then the derived transaction value *without any further adjustments* [italic added] will be the appraised value. There is no requirement, as there is under current law, that all elements of value be present, if the previously stated conditions of the law have been complied with. Thus, transactions between related parties under 807.00 will be essentially subject to the same considerations that any related party transfer will be under this law.

It is important to recognize in the context of transaction value that only those items specifically referred to in section 402(b)(1) may be added to the price actually paid or payable. One of these, "the value, apportioned as appropriate, of any assists", is particularly relevant in the 807 area. As you know, section 402(h)(1)(A) defines assist in the following manner:

> (1)(A) The term "assist" means any of the following if supplied directly or indirectly, and free of charge or at reduced cost, by the buyer of imported merchandise for use in connection with the production or the sale for export to the United States of the merchandise:

(i) Materials, components, parts and similar items incorporated in the imported merchandise.

(ii) Tools, dies, molds, and similar items used in the production of the imported merchandise.

(iii) Merchandise consumed in the production of the imported merchandise.

(iv) Engineering, development, artwork, design work, and plans and sketches that are undertaken elsewhere than in the United States and are necessary for the production of the imported merchandise.

Thus, only those items which specifically meet the definition of assists can be added to the price actually paid or payable under the category of assists. No authority exists under the concept of generally accepted accounting principles to make additions to the price actually paid or payable. Consequently, those items carried on the books of the U.S. firm and not covered by the definition of assists, as set forth in section 402(h)(1)(A), cannot be added to the price actually paid or payable.

We also wish to point out that this response is by its nature quite general and that some of the comments contained in your incoming memorandum must be addressed on a case-by-case basis.

(C.S.D. 80–125)

Issuance of Carriers' Certificates and Release Orders

Date: June 4, 1980
File: ENT–1–01–RRUEE
713041 MK

To: Regional Commissioner of Customs, Chicago, Ill.
From: Director, Office of Regulations and Rulings.
Subject: Issuance of carriers' certificates and release orders.

The regional counsel at Houston has brought to our attention that, in return for payment of ocean freight liens, a general order warehouse proprietor is obtaining carriers' certificates and release orders for general order unclaimed merchandise, which name his customhouse broker as owner or consignee. This practice has been sanctioned by Trade Bulletin 79–64 (copy attached) issued by the District Director at Houston on July 24, 1979.

Paragraph 3 of that bulletin states that:

> When a carrier exercises its statutory right to designate an importer/consignee, there appears to be no Customs limitation on this right, whoever the designee may be.

We disagree with that statement. It is our opinion that a carrier who, in a carrier's certificate, certifies a company or individual "to be the

owner or consignee" of the articles within the purview of section 484(h), Tariff Act of 1930, must have reasonable cause to believe in the accuracy of the certification.

The Houston trade bulletin should be revoked, to the extent that it is inconsistent with this ruling, copies of which we are sending to the regional counsels at Houston and Chicago. Please advise all importers, brokers and other interested parties. This ruling will be published in the CUSTOMS BULLETIN.

International Trade Commission Notices

Investigations by the U.S. International Trade Commission

DEPARTMENT OF THE TREASURY

The appended notices relating to investigations by the U.S. International Trade Commission are published for the information of Customs officers and others concerned.

R. E. CHASEN,
Commissioner of Customs.

In the Matter of CERTAIN FOOD SLICERS AND COMPONENTS THEREOF	Investigation No. 337–TA–76

OPPORTUNITY FOR PUBLIC COMMENT ON PROPOSED CONSENT ORDER AGREEMENT AND SETTLEMENT AGREEMENT

Notice is hereby given that the presiding officer in the above-captioned investigation has certified to the Commission for appropriate action a joint motion to terminate the investigation along with a consent order agreement signed by the Commission's investigative attorney, complainant Prodyne Enterprises, Inc. and respondent Albert E. Price, Inc. The investigation is being conducted pursuant to section 337 of the Tariff Act of 1930, as amended (19 U.S.C. 1337). The motion was docketed as motion 76–1. Provision is made for the filing of such motions and agreements in section 210.51(a) of the Commission's Rules of Practice and Procedure (19 CFR 210.51(a)).

BACKGROUND

This investigation began with a complaint filed by Prodyne Enterprises, Inc. on November 5, 1979, alleging infringement of claim 7 of U.S. Letters Patent No. 3,766,817 by E. Mishan & Sons, Albert E. Price, Inc., Crest Industries Corp., and Taiwan Timing Trading Co. Investigation No. 337–TA–76 was instituted on December 4, 1979, based on Prodyne's complaint. On March 21, 1980, the complainant and the Commission investigative attorney entered into a consent

order agreement with respondent Albert E. Price, Inc., and moved for termination of the investigation as to respondent Price based upon the consent order agreement and the settlement agreement entered into by Prodyne and Price.

WRITTEN COMMENTS REQUESTED

Copies of the proposed consent order agreement and settlement agreement are set forth below. Any interested member of the public is invited to submit written comments regarding this matter. Such comments should be addressed to the Secretary, U.S. International Trade Commission, 701 E Street NW., Washington, D.C. 20436, and should be received not later than 30 days after the publication of this notice in the Federal Register. The original and 19 true copies of all written submissions must be filed with the Secretary of the Commission. Any person desiring to submit a document (or portions thereof) to the Commission in confidence must request in camera treatment. Such request should be directed to the Secretary of the Commission and must include a full statement of the reasons why the Commission should grant such treatment. The Commission will either accept such submission in confidence or return it. All nonconfidential written submissions will be open to public inspection at the Secretary's Office. The Commission has also requested comments from Government agencies pursuant to 19 CFR, section 210.14(a)(2).

ADDITIONAL INFORMATION

No public hearing before the Commission regarding this motion and agreement is contemplated at this time. The Commission will give consideration to requests for such a hearing if such requests are received not later than 10 days after publication of this notice in the Federal Register.

Notice of institution of the investigation was published in the Federal Register of December 21, 1979 (44 F.R. 75733).

By order of the Commission.

Issued: July 10, 1980.

KENNETH R. MASON,
Secretary.

In the Matter of CERTAIN FOOD SLICERS AND COMPONENTS THEREOF	Investigation No. 337-TA-76

Consent Order Agreement

Complainant Prodyne Enterprises, Inc., having filed a complaint; and

The U.S. International Trade Commission (Commission) having instituted an investigation pursuant to notices of investigation; and

The respondent having appeared and denied the material allegations of the complaint; and

The Commission having determined it has jurisdiction of the subject matter of this proceeding and the Commission having determined that the complaint states a cause of action under section 337 of the Tariff Act of 1930, 19 U.S.C., section 1337 and all acts amendatory thereof and supplementary thereto; and

Before the making of any findings of fact or conclusions of law, and before the hearing or adjudication of any issue of fact or law herein, and the respondent having denied any violation of section 337 of the Tariff Act of 1930, as amended, 19 U.S.C., section 1337 (section 337), or as alleged in the complaint, and all of the parties hereto having consented to the entry of this consent order agreement;

It is Hereby Ordered That:

I. TARIFF ACT OF 1930

The Commission has, and respondent concedes that the Commission has, jurisdiction of the subject matter of this invesgtigation and over the respondent signatory hereto for the purposes of issuing and enforcing this consent order agreement.

II. SETTLEMENT PURPOSES ONLY

This consent order agreement is for settlement purposes only and does not constitute a determination by the Commission or an admission by respondent that the law has been violated as alleged in the complaint or notices of investigation or otherwise.

III. APPLICABILITY

The provisions of this consent order agreement shall apply to respondent and to its officers, directors, employees, controlled (whether by stock ownership or otherwise) and/or majority owned business entities, successors and assigns, and to each of them, and to all persons who receive actual notice of this consent order agreement by service in accordance with section V hereof.

IV. INDIVIDUAL CONDUCT PROHIBITED

Respondent shall not import, cause to be imported, purchase, sell, give, own or consign any imported device which infringes U.S. Patent No. 3,766,817 or any component thereof which constitutes a material part of the invention and is not a staple article or commodity of commerce; provided, however, nothing herein shall prohibit Respondent from selling or otherwise disposing of all imported devices presently

in inventory, prior to October 15, 1980, the quantity of which has been disclosed to the Commission.

V. SERVICE OF CONSENT ORDER AGREEMENT

Respondent is ordered and directed to serve, within 30 days after the effective date of this consent order agreement, a conformed copy of this consent order agreement upon each of its respective officers, directors, managing agents, agents, and employees who have any responsibility for the marketing, distribution or sale of such respondent's products in the United States or for shipment or export to the United States for resale in the United States;

VI. MODIFICATION

This consent order agreement constitutes a settlement and resolution of investigation No. 337–TA–76 and the complaint, and does not constitute a determination of any of the factual or legal issues raised in the proceeding or an admission that respondent has enagged in the conduct prohibited hereby, or an admission that said conduct violates section 337. Any of the parties to this consent order agreement may apply to the Commission at any time for such further orders and directions as may be necessary or appropriate for the construction or carrying out of this consent order agreement, for the amendment or modification of any of the provisions thereof, or for the enforcement or compliance therewith. In the event that U.S. Patent No. 3,766,817 is declared invalid or unenforceable by a final judgment or decree of the Commission or a court of competent jurisdiction from which no appeal can be taken section IV of this consent order agreement shall thereafter be void and of no effect.

By order of the Commission:

_____

Secretary

The above order is consented to:

For complainant: By Keith D. Beecher, Jessup & Beecher, 2040 Avenue of the Stars, Los Angeles, Calif., counsel for Prodyne Enterprises Inc.

For respondent: By Joel Goldhammer, Seidel, Gonda, Goldhammer & Panitch, 3 Penn Center Plaza, Philadelphia, Pa., counsel for Albert E. Price, Inc.

For U.S. International Trade Commission, Commission investigative attorney: By Donald R. Dinan, 701 E Street NW. Washington, D.C.

AGREEMENT

Agreement, made and entered in this 25th day of March 1980, by and between the following parties:

(a) Prodyne Enterprises, Inc., a California corporation, having a mailing address of P.O. Box 212, Montclair, Calif., 91763, (hereinafter Prodyne); and

(b) Albert E. Price, Inc., a New Jersey corporation having a place of business at Interstate Industrial Park, Bellmawr, N.J., 08031 (hereinafter AEP).

Whereas, Prodyne has instituted proceedings before the International Trade Commission alleging as a cause of action under 19 U.S.C. 1337 as amended and supplemented, that AEP has engaged in unfair methods of competition or unfair acts by importing goods that infringe U.S. Patent No. 3,766,817, as more specifically set forth in the complaint, as amended, filed November 5, 1979, which forms a part of the matter captioned investigation No. 337–TA–76, Certain Food Slicers and Components Thereof;

Whereas AEP has ceased importing the accused cheese boards with slicers, catalog Nos. 9023 and 9024 illustrated in exhibit 1 attached hereto and concurrently with this agreement has entered into an agreement in settlement of the above identified investigation; and

Whereas, the parties are desirous of compromising and settling all of the controversies which may exist between them in respect to the subject matter of the investigation.

Now, therefore, for and in consideration of the foregoing premises and other good and valuable consideration, the receipt in sufficiency of which is hereby mutually acknowledged, and intending to be legally bound, Prodyne and AEP agree as follows:

1. AEP represents and warrants that it has ceased importing the cheese board slicers, catalog Nos. 9023 and 9024 and has no intention of importing them in the future.

2. This agreement is made and entered into without any admission or inference of an admission that U.S. Patent No. 3,766,817 is valid or infringed or that AEP has committed any wrongful act or violated any law.

3. Prodyne releases and discharges AEP, together with its officers, directors, agents, purchasers, customers, successors and assigns from all causes of action and claims for damage that Prodyne may have against them arising out of or relating to infringement of U.S. Patent No. 3,766,816 and for unfair methods of competition and unfair acts arising out of the importation, use and sale of the cheese board slicers, catalog Nos. 9023 and 9024, from the beginning of time until the date of this agreement, and as long as this agreement remains in force, agrees to take no action against AEP, its officers, directors, agents,

purchasers, customers, successors and assigns by reason of any prior use or sale of said cheese board slicers, catalog Nos. 9023 and 9024, which were imported into the United States prior to the date of this agreement. It is agreed and understood that AEP has said imported cheese board slicers in inventory, the quantity of which has been disclosed in confidence as part of the settlement of the investigation, and that the aforesaid release and covenant not to sue is fully applicable to the sale of the inventory of cheese board slicers by AEP and to the resale by its customers.

4. Prodyne and AEP agree that this Agreement shall be binding upon and inure to benefit of Prodyne and AEP, their respective officers, directors, agents, successors and assigns, and all persons acting by, through, under or in active concert or participation with them.

5. This agreement shall be considered as a contract made by and under the laws of the State of New Jersey.

Executed by the parties hereto, effective the date first above written.

Attest:
CHRISTOPHER J. MCARDLE

PRODYNE ENTERPRISES, INC.
By JAMES T. DAVIS.

Attest:
——— ———, *Secretary.*

ALBERT E. PRICE, INC.
By ——— ———,
Vice President.

In the Matter of CERTAIN AIRTIGHT, CAST-IRON STOVES	Investigation No. 337-TA-69

Notice of Termination

Upon consideration of the presiding officer's recommendation and the record in this proceeding, the Commission is ordering the termination of investigation No. 337-TA-69, Certain Airtight Cast-Iron Stoves, as to respondent Huan Enterprise Corp., by granting motion 69-25 by the Commission investigative attorney. The motion to terminate was unopposed by the other parties to the investigation.

The order is effective as of July 11, 1980.

Any party wishing to petition for reconsideration of the Commission's action must do so within 14 days of service of the Commission order. Such petitions must be in accord with Commission rule 210.56 (19 CFR 210.56).

Copies of the Commission's action and order, Commissioners' opinion(s) and any other public documents in this investigation are

available to the public during official working hours (8:45 a.m. to 5:15 p.m.) in the Office of the Secretary, U.S. International Trade Commission, 701 E Street NW., Washington, D.C. 20436; telephone 202-523-0161.

Notice of the institution of this investigation was published in the Federal Register of July 12, 1979 (44 F.R. 40732).

By order of the Commission.

Issued: July 11, 1980.

KENNETH R. MASON,
Secretary.

In the Matter of CERTAIN APPARATUS FOR THE CONTINUOUS PRODUCTION OF COPPER ROD	Investigation No. 337-TA-52

ADVISORY OPINION PROCEEDING

Notice of Issuance of Advisory Opinion

On July 14, 1980, the U.S. International Trade Commission issued an advisory opinion regarding the cease and desist orders issued on November 23, 1979, in Certain Apparatus for the Continuous Production of Copper Rod, investigation No. 337-TA-52. The issuance of the advisory opinion follows a request of April 2, 1980, by Fried, Krupp GmbH. and Krupp International, Inc., for such an opinion.

Copies of the public version of the advisory opinion are available in the Office of the Secretary, U.S. International Trade Commission, 701 E Street NW., Washington, D.C. 20436; telephone 202-523-0161.

By Order of the Commission.

Issued: July 14, 1980.

KENNETH R. MASON,
Secretary.

(332-111)

SEMIANNUAL AND ANNUAL SURVEYS ON NONELECTRIC COOKING WARE OF STEEL

Notice is hereby given that the U.S. International Trade Commission, on July 11, 1980, instituted an investigation under section 332(b) of the Tariff Act of 1930, as amended (19 U.S.C. 1332(b)), for the purpose of conducting semiannual and annual surveys with respect to nonelectric cooking ware of steel, enameled or glazed with vitreous glasses, subject to temporary duty increases by reason of Proclamation

No. 4713, issued January 16, 1980 (published in the Federal Register of January 18, 1980 (45 F.R. 3561)). The annex to Proclamation No. 4713 requires the Commission to conduct such surveys. The temporary duty increases, which are for a 4-year period beginning January 17, 1980, are provided for in item 923.60 of the appendix to the Tariff Schedules of United States (19 U.S.C. 1202).

The annex to Proclamation No. 4713 provides, in pertinent part, as follows:

> 7. *U.S. International Trade Commission (USITC) surveys on certain nonelectric cooking ware of steel.*—The USITC shall conduct surveys with respect to cooking ware of the type subject to temporary duty increases under item 923.60 as follows:
>
> (a) *Semiannually.*—Surveys semiannually to obtain periodic data on U.S. production; U.S. producers' domestic, export, and total shipments, imports, apparent U.S. consumption, employment, and man-hours. The initial survey shall cover the last half of 1979 and the first half of 1980, the last such survey shall cover the semiannual period which ends not less than 60 days prior to the termination of the import relief. The results of the surveys shall be published and transmitted to the U.S. Trade Representative within 60 days of the end of each survey period.
>
> (b) *Annually.*—Annual surveys to obtain from domestic producers annual data on profits, capital expenditures, capacity, and capacity utilization. The initial survey shall cover calendar year 1979, and the results of this and subsequent surveys shall be published and transmitted to the U.S. Trade Representative by the end of the first quarter of each year thereafter so long as the import relief is in effect.

By order of the Commission:

Issued: July 14, 1980.

KENNETH R. MASON,
Secretary.

In the Matter of CERTAIN CATHODE SPUTTER COATED GLASS TRANSPARENCIES	Investigation No. 337-TA-79

Notice of Commission Request for Comments Concerning Settlement Agreement and Termination

AGENCY: U.S. International Trade Commission.

ACTION: Proposed settlement agreement which forms the basis for the parties' motion to terminate—request for public comment.

SUMMARY: This settlement agreement would result in termination

of this investigation. This notice requests public comment on the parties' motion to terminate, which is available in the Office of the Secretary of the Commission, within 30 days.

DATES: Comments will be considered if received within 30 days of this notice. Comments should conform with Commission rule 201.8 (19 CFR 201.8) and should be addressed to Kenneth R. Mason, Secretary, U.S. International Trade Commission, 701 E Street NW., Washington, D.C. 20436.

FOR FURTHER INFORMATION CONTACT: Scott Daniels, Office of the General Counsel, U.S. International Trade Commission, 701 E Street NW., Washington, D.C. 20436; telephone 202-523-0480.

SUPPLEMENTAL INFORMATION: In connection with the Commission's investigation, under section 337 of the Tariff Act of 1930, of alleged unfair methods of competition and unfair acts in the importation and sale of Certain Cathode Sputter-Coated Glass Transparencies into the United States, the administrative law judge (ALJ) recommended on May 28, 1980, that the Commission grant the parties' motion to terminate this investigation against respondents Triplex Safety Glass Co. Ltd., and British Aerospace, Inc., which was certified to the Commission on May 7, 1980. Copies of the ALJ's recommendation may be obtained by interested persons by contacting the Office of the Secretary to the Commission, 701 E Street NW., Washington, D.C. 20436; telephone 202-523-0161.

This investigation began with an amended complaint filed by PPG Industries Inc., on January 14, 1980, alleging infringement of claims 1-11 of U.S. Letters Patent No. 4,094,763 by Triplex and British Aerospace and was instituted on February 12, 1980. On April 25, 1980, the four parties filed a motion to terminate the investigation on the basis of a license agreement between PPG and Boeing. The Commission investigative attorney filed a memorandum in support of the motion to terminate.

WRITTEN COMMENTS REQUESTED

Since the motion to terminate is joined in by all the parties, including the Commission's investigative attorney, and since the ALJ has recommended that the motion be granted, no oral argument will be held with respect to the ALJ's recommendation. However, in light of the Commission's duty to consider the public interest, the Commission requests written comments from members of the public concerning the effect of the termination of this investigation based on the license agreement upon (1) the public health and welfare, (2) competitive conditions in the U.S. economy, (3) the production of like or directly competitive articles in the United States, and (4) U.S. consumers.

These written comments must be filed with the Secretary of the Commission no later than 30 days after publication of this notice in the Federal Register. The Commission has also requested comments from Government agencies pursuant to 19 CFR, section 210.14(a)(2) on the license agreement, which is disclosable to those agencies under provisions of the protective order covering the investigation.

The essence of the license agreement is PPG's promise to license Boeing, the principal domestic user of the cathode sputter-coated glass transparencies. PPG also agrees not to assert the '763 patent in any section 337 proceeding against Triplex.

ADDITIONAL INFORMATION

The original and 19 true copies of all written submissions must be filed with the Secretary of the Commission. Any person desiring to submit a document (or portions thereof) to the Commission in confidence must request in camera treatment. Such request should be directed to the Secretary of the Commission and must include a full statement of the reasons why the Commission should grant such treatment. The Commission will either accept such submission in confidence or return it. All nonconfidential written submissions will be open to public inspection at the Secretary's office.

By order of the Commission.

Issued: June 25, 1980.

KENNETH R. MASON,
Secretary.

Index

U.S. Customs Service

T.D. No

Treasury decision: Manmade fiber textile/restriction on entry 80-193

C.S.D. No.

Customs Service decisions:

Carrier control: Use of foreign-built crane vessel in U.S. waters ... 80-116

Classification:

Polyethylene sheeting and tarpaulins 80-101

Spiked golf shoes; computation of exterior surface area of sole and upper 80-105

Moon Boots 80-106

Carpet-cutter blades; blades or parts of cutting tools 80-110

Entireties; Candleholder, candle cups, and wax candle used in combination as illuminating article 80-112

Drawback:

Certificate of delivery; section 22.15(b), Customs regulations ... 80-102

Approved manufacturing period limited to a harvesting season. 80-107

In-bond:

Consolidated cargo shipments in transit from one U.S. port to another through contiguous country 80-120

Carriers and cartmen; effect of 19 CFR 125.14, as amended, on existing cartage contracts 80-122

Issuance of carriers' certificates and release orders 80-125

Country-of-origin marking:

Coats with label on inner facing 80-109

Whether the assembly of ceiling fan components results in substantial transformation 80-111

Marking:

No exception to country-of-origin marking requirements for accessories to properly marked machines already imported 80-108

Country-of-origin marking requirments for leather harnesses to be manufactured in Haiti from American leather 80-113

Exception to country-of-origin marking requirements for asbestos cement pipe tubes to be further manufactured into finished pipe following importation 80-114

Exception to country-of-origin marking requirements for price-marking labels and tags imported in marked cartons 80-115

Country-of-origin marking of paper cups imported in full case lots 80-117

Country-of-origin marking of electrical adaptor plugs 80-119

Country-of-origin marking of cigarette lighters and their containers 80-123

Prohibited and restricted importations:

Prerecorded cassettes 80-103

Trademark infringement; "Cross" electronic calculators 80-104

Customs Service decisions —Continued
Reliquidation: Fittings from Israel accorded duty-free status by Executive order ..... C.S.D. No. 80-118
Valuation: Application of transaction value under the Trade Agreements Act of 1979 to item 807.00 appraisement 80-124
Vessels: Use of a foreign-built barge as a power source for Off-Shore Dredging Equipment 80-121

Customs Court

Decisions of the U.S. Court of Customs and Patent Appeals: *Schering Corporation* v. *The United States* C.A.D. No. 1250

U.S. GOVERNMENT PRINTING OFFICE : 1980 O - 324-900

324-901 Item 750-D T 1.11/3:14/33
377
AUG 13 1980

Customs Bulletin

Regulations, Rulings, Decisions, and Notices concerning Customs and related matters

and Decisions

of the United States Court of Customs and Patent Appeals and the United States Customs Court

9247

Vol. 14 AUGUST 6, 1980 No. 33

This issue contains

T.D. 80–194 through 80–197
General Notice
C.D. 4863
Protest abstracts 80P/113 through 80P/115
Reap. abstracts 80R/219 through 80R/222
International Trade Commission Notices

THE DEPARTMENT OF THE TREASURY
U.S. Customs Service

NOTICE

The abstracts, rulings, and notices which are issued weekly by the U.S. Customs Service are subject to correction for typographical or other printing errors. Users may notify the U.S. Customs Service, Logistics Management Division, Washington, D.C. 20229, of any such errors in order that corrections may be made before the bound volumes are published.

For sale by the Superintendent of Documents, U.S. Government Printing Office, Washington, D.C. 20402. Price: $2.25 (single copy domestic); $2.85 (single copy foreign). Subscription price: $85.00 a year domestic; $106.25 a year foreign.

U.S. Customs Service

Treasury Decisions

(T.D. 80–194)

Foreign Currencies—Daily Rates for Countries Not on Quarterly List

Rates of exchange based on rates certified to the Secretary of the Treasury by the Federal Reserve Bank of New York for the Brazil cruzeiro, People's Republic of China yuan, Hong Kong dollar, Iran rial, Philippines peso, Singapore dollar, Thailand baht (tical), and Venezuela bolivar

The Federal Reserve Bank of New York, pursuant to section 522(c), Tariff Act of 1930, as amended (31 U.S.C. 372 (c)), has certified buying rates for the dates and foreign currencies shown below. The rates of exchange, based on these buying rates, are published for the information and use of Customs officers and others concerned pursuant to part 159, subpart C, Customs Regulations (19 CFR 159, subpart C).

Brazil cruzeiro:	
June 23–24, 1980	$0.0193
June 25–27, 1980	.0191
Peoples Republic of China yuan:	
June 23–27, 1980	$0.682687
Hong Kong dollar:	
June 23, 1980	$0.203583
June 24, 1980	.203169
June 25, 1980	.202840
June 26, 1980	.202634
June 27, 1980	.202922
Iran rial:	
June 23–27, 1980	Not available
Philippines peso:	
June 23–27, 1980	$0.1345
Singapore dollar:	
June 23, 1980	$0.472590
June 24, 1980	.471698
June 25–26, 1980	.471254
June 27, 1980	.471809

Thailand baht (tical):

June 23–27, 1980	$0.0490

Venezuela bolivar:

June 23–27, 1980	$0.2329

(LIQ-3-TRODE)

Dated: June 11, 1980.

G. SCOTT SHREVE
(For Chester R. Krayton, Director,
Duty Assessment Division).

(T.D. 80–195)

Foreign Currencies—Variances From Quarterly Rate

Rates of exchange based upon rates certified to the Secretary of the Treasury by the Federal Reserve Bank of New York

The following rates of exchange are based upon rates certified to the Secretary of the Treasury by the Federal Reserve Bank of New York, pursuant to section 522(c), Tariff Act of 1930, as amended (31 U.S.C. 372(c)), and reflect variances of 5 per centum or more from the quarterly rate published in T.D. 80–103 for the following countries. Therefore, as to entries covering merchandise exported on the dates listed, whenever it is necessary for Customs purposes to convert such currency into currency of the United States, conversion shall be at the following rates:

Australia dollar:

June 23, 1980	$1,1573
June 24, 1980	1.1558
June 25, 1980	1.1545
June 26, 1980	1.1558
June 27, 1980	1.1560
June 28, 1980	1.1550

Austria schilling:

June 23, 1980	$0.079618
June 24–25, 1980	.079491
June 26, 1980	.079618
June 27, 1980	.079681
June 30, 1980	.080000

Belgium franc:

June 23, 1980	$0.035348
June 24, 1980	.035336

Belgium franc—Continued	
June 25, 1980	.035348
June 26, 1980	.035379
June 27, 1980	.035386
June 30, 1980	.035346
Denmark krone:	
June 23–24, 1980	$0.182315
June 25, 1980	.182482
June 26, 1980	.182648
June 27, 1980	.182815
June 30, 1980	.183050
Finland markka:	
June 23, 1980	$0.274801
June 24, 1980	.274574
June 25, 1980	.274348
June 26, 1980	.274574
June 27, 1980	.274801
June 30, 1980	.275558
France franc:	
June 23, 1980	$0.243546
June 24, 1980	.243368
June 25, 1980	.243605
June 26, 1980	.243724
June 27, 1980	.244021
June 30, 1980	.244260
Germany duetsche mark:	
June 23, 1980	$0.565835
June 24, 1980	.564972
June 25, 1980	.565451
June 26, 1980	.566733
June 27, 1980	.567054
June 30, 1980	.566861
India rupee:	
June 23, 1980	$0.1274
June 24–26, 1980	.1271
June 27, 1980	.1274
June 30, 1980	.1282
Ireland pound:	
June 23, 1980	$2.1200
June 24, 1980	2.1180
June 25, 1980	2.1150
June 26, 1980	2.1155
June 27, 1980	2.1180
June 30, 1980	2.1250

Italy lira:	
June 23, 1980	$0.001196
June 24–25, 1980	.001194
June 26, 1980	.001193
June 27, 1980	.001188
June 30, 1980	.001193
Japan yen:	
June 23, 1980	$0.004628
June 24, 1980	.004617
June 25, 1980	.004588
June 26, 1980	.004604
June 27, 1980	.004597
June 30, 1980	.004548
Malaysia dollar:	
June 23, 1980	$0.467727
June 24, 1980	.466636
June 25, 1980	.465549
June 26, 1980	.465224
June 27, 1980	.465983
June 30, 1980	.466853
Netherlands guilder:	
June 23, 1980	$0.516049
June 24, 1980	.515251
June 25, 1980	.516049
June 26, 1980	.516529
June 27, 1980	.517197
June 30, 1980	.517518
New Zealand dollar:	
June 23, 1980	$0.9885
June 24, 1980	.9870
June 25, 1980	.9860
June 26, 1980	.9855
June 27, 1980	.9865
June 30, 1980	.9870
Norway krone:	
June 23, 1980	$0.206143
June 24, 1980	.205719
June 25, 1980	.205804
June 26, 1980	.206058
June 27, 1980	.206420
June 30, 1980	.206441
Portugal escudo:	
June 23, 1980	$0.020408
June 24, 1980	.022379

Portugal escudo—Continued	
June 25, 1980	.020396
June 26, 1980	.020408
June 27, 1980	.020421
June 30, 1980	.020471
South Africa rand:	
June 27, 1980	$1.2972
June 30, 1980	.2990
Spain peseta:	
June 30, 1980	$0.014267
Sweden krona:	
June 23, 1980	$0.240010
June 24–25, 1980	.239578
June 26, 1980	.240211
June 27, 1980	.240819
June 30, 1980	.240385
Switzerland franc:	
June 23, 1980	$0.611808
June 24, 1980	.609756
June 25, 1980	.610426
June 26, 1980	.613987
June 27, 1980	.614439
June 30, 1980	.613572
United Kingdom pound:	
June 23, 1980	$2.3410
June 24, 1980	2.3357
June 25, 1980	2.3360
June 26, 1980	2.3435
June 27, 1980	2.3470
June 30, 1980	2.3555

(LIQ-3-TRODE)

Dated: July 11, 1980.

G. Scott Shreve
(For Chester R. Krayton, Director,
Duty Assessment Division).

(T.D. 80-196)

Foreign Currencies—Daily Rates for Countries Not on Quarterly List

Rates of exchange based on rates certified to the Secretary of the Treasury by the Federal Reserve Bank of New York for the Brazil cruzeiro, People's Republic of China yuan, Hong Kong dollar, Iran rial, Philippines peso, Singapore dollar, Thailand baht (tical), and Venezuela bolivar

The Federal Reserve Bank of New York, pursuant to section 522(c), Tariff Act of 1930, as amended (31 U.S.C. 372(c)), has certified buying

rates for the dates and foreign currencies shown below. The rates of exchange, based on these buying rates, are published for the information and use of Customs officers and others concerned pursuant to part 159, subpart C, Customs Regulations (19 CFR 159, subpart C).

Brazil cruzeiro:	
June 30, 1980	$0.0190
July 1–2, 1980	.0190
July 3, 1980	.0191
People's Republic of China yuan:	
June 30, 1980	$0.682687
July 1–3, 1980	.682687
Hong Kong dollar:	
June 30, 1980	$0.202840
July 1, 1980	.203273
July 2, 1980	.203149
July 3, 1980	.203046
Iran rial	
June 30, 1980	Not available
July 1–3, 1980	Not available
Philippines peso:	
June 30, 1980	$0.1345
July 1–3, 1980	.1345
Singapore dollar:	
June 30, 1980	$0.472813
July 1, 1980	.472144
July 2, 1980	.472925
July 3, 1980	.472144
Thailand baht (tical):	
June 30, 1980	$0.0490
July 1–3, 1980	.0490
Venezuela bolivar:	
June 30, 1980	$0.2329
July 1–3, 1980	.2329

(LIQ-3-TRODE)

Dated: June 11, 1980.

G. Scott Shreve
(For Chester R. Krayton, Director,
Duty Assessment Division).

(T.D. 80-197)

Foreign Currencies—Quarterly List of Rates of Exchange

List of buying rates in U.S. dollars based upon rates certified to the Secretary of the Treasury by the Federal Reserve Bank of New York

The table below lists rates of exchange, in U.S. dollars for certain foreign currencies, which are based upon rates certified to the Secretary of the Treasury by the Federal Reserve Bank of New York under the provisions of section 522(c), Tariff Act of 1930, as amended (31 U.S.C. 372(c)), for the information and use of Customs officers and others concerned pursuant to part 159, subpart C, Customs Regulations (19 CFR 159, subpart C).

QUARTER BEGINNING July 1, 1980, TO September 30, 1980

Country	Name of currency	U.S. dollars
Australia	Dollar	$1.1557
Austria	Schilling	.079808
Belgium	Franc	.035511
Canada	Dollar	.869414
Denmark	Krone	.182815
Finland	Markka	.275482
France	Franc	.244469
Germany	Deutsche Mark	.567698
India	Rupee	.1282
Ireland	Pound	2.1310
Italy	Lira	.001189
Japan	Yen	.004556
Malaysia	Dollar	.466353
Mexico	Peso	.043592
Netherlands	Guilder	.518672
New Zealand	Dollar	.9875
Norway	Krone	.206441
Portugal	Escudo	.020416
Republic of South Africa	Rand	1.2997
Spain	Peseta	.014247
Sri-Lanka	Rupee	.0624
Sweden	Krona	.240674
Switzerland	Franc	.614817
United Kingdom	Pound	2.3615

(LIQ-3-TRODE)

Dated: July 11, 1980.

G. Scott Shreve
(For Chester R. Krayton, Director,
Duty Assessment Division).

324-981 O - 80 - 2

U.S. Customs Service

General Notices

19 CFR Chapter I

Improving Government Regulations

Semiannual agenda

AGENCY: U.S. Customs Service, Department of the Treasury.

ACTION: Semiannual agenda.

SUMMARY: In response to Executive Order 12044, Improving Government-Regulations, and the Treasury Department directive implementing that Executive order, Customs has prepared and is publishing for public information a list of significant regulations either under development or under review.

FOR FURTHER INFORMATION CONTACT: For additional information regarding any particular regulatory project described in the agenda, communicate with the person identified as the contact. Comments or inquiries of a general nature should be directed to: Todd J. Schneider, Regulations and Research Division, Office of Regulations and Rulings, U.S. Customs Service, room 2426, 1301 Constitution Avenue NW., Washington, D.C. 20229; 202-566-8237.

SUPPLEMENTARY INFORMATION:

BACKGROUND

On November 8, 1978, the Department of the Treasury published a report in the Federal Register (43 F.R. 52120) to implement Executive order 12044. The report included a directive that each Treasury bureau or office shall publish a semiannual agenda of significant regulations either under development or under review. The agenda is to describe each regulatory project (project) being considered, the need for and legal basis for the action being taken, the name and telephone number of a knowledgeable agency official, and whether a regulatory analysis will be prepared. In addition, subsequent agendas will show the status of projects referred to in the previously published agenda. A notice published in the preliminary pages of the Federal Register on

October 10, 1978 (43 F.R. xii), provides that Customs will publish its semiannual agenda on February 1 and August 1 of each year.

The following is the fourth semiannual agenda to be published by Customs. It has been determined that only one of the projects listed, that designated "Entry of merchandise/parts 24, 141, 142, 144," will require a regulatory analysis under the criteria set out in the Executive order and implementing Treasury directive. However, that project remains under study and a draft regulatory analysis will not be available to the public unless it is determined to proceed with the project and a notice of proposed rulemaking is published in the Federal Register.

General statutory authority for the development or review of regulations relating to Customs matters is found in section 301, title 5, United States Code (5 U.S.C. 301), and in sections 66 and 1624, title 19, United States Code (19 U.S.C. 66, 1624). When appropriate, specific statutory authority is indicated after the description of each project.

In accordance with the Treasury directive implementing Executive Order 12044, no action, other than preliminary studies, may be taken on any project commenced after May 22, 1978, without Secretarial approval of a work plan. Work on many of the described projects commenced before May 22, 1978, and therefore, no work plan will be prepared. For these projects, and others which are in an early stage of preparation, no work plans are available to the public. However, projects which either have had work plans approved or are the subject of documents published in the Federal Register as an advance notice of proposed rulemaking (ANPRM), a notice of proposed rulemaking (NPRM), or a final rule—Treasury decision (T.D.), are identified by work plan number or Federal Register citation. Approved work plans are available to the public under the provisions of the Freedom of Information Act, as amended (5 U.S.C. 552), and part 103, Customs Regulations (19 CFR, part 103). Requests should be addressed to the Freedom of Information and Privacy Branch, U.S. Customs Service, 1301 Constitution Avenue NW., room 2325, Washington, D.C. 20229.

By direction of the Secretary of the Treasury.

Dated: June 23, 1980.

R. E. Chasen,
Commissioner of Customs.

PART I—*Regulations Under Development*

Title/Citation (19 CFR —)	*Summary*
Public gaugers—Petroleum/parts 4 and 151.	*Description.*—Insure maintenance of reliable statistics by implementing standardized guidelines and procedures for monitoring imports of petroleum and petroleum products. *Need.*—Implement recommendations of Customs Petroleum Task Force. *Authority.*—19 U.S.C. 1202. *Contact.*—Alice Rigdon (202-566-5354). *Status.*—Work plan 79-27 approved; NPRM published December 21, 1979 (44 F.R. 75684); T.D. 80-142 published May 30, 1980 (45 F.R. 36376).
Vessels; foreign repairs/secs. 4.7 and 4.14.	*Description.*—Revision of requirements and procedures for handling entries relating to foreign repairs and equipment purchases by U.S. vessels. *Need.*—To expedite processing of entries. *Authority.*—19 U.S.C. 1466, 1498, 1514. *Contact.*—James Fritz (202-566-5706). *Status.*—NPRM published Apr. 4, 1978 (43 F.R. 14060); T.D. under development.
Air commerce/parts 6, 10, and others.	*Description.*—Establish new rules for (1) duty-free trade in civil aircraft and parts for civil aircraft, and (2) dutiability of foreign repairs, to, and foreign purchases of parts and materials for, U.S. registered civil aircraft. *Need.*—To implement title VI, Civil Aircraft Agreement, of Public Law 96-39, Trade Agreements Act of 1979. *Authority.*—General. *Contact.*—John Mathis (202-566-5706). *Status.*—Work plan 79-30 approved; NPRM published Jan. 8, 1980 (45 F.R. 1633); Treasury Decision under development.
Air commerce/secs. 6.3 and 6.8	*Description.*—Simplification and clarification of aircraft clearance procedures. *Need.*—To facilitate clearance of aircraft departing United States. *Authority.*—49 U.S.C. 1509. *Contact.*—John Mathis (202-566-5706). *Status.*—Work plan 79-6 approved; Treasury Decision under development.
Petroleum/part 10	*Description.*—Regulation of petroleum exports from Canada. *Need.*—Conforming amendment required by Public Law 95-159. *Authority.*—General. *Contact.*—G. Scott Shreve (202-566-8121). *Status.*—Treasury Decision under development.

PART I—*Regulations Under Development*—Continued

Title/Citation (19 CFR —)	*Summary*
Endangered species—Antiques/parts 10 and 12.	*Description.*—Provide for importation of specified antique articles otherwise prohibited entry by Endangered Species Act of 1973 at designated ports of entry. *Need.*—Implement provisions of Public Law 95-632, Endangered Species Act Amendments of 1978. *Authority.*—19 U.S.C. 1202. *Contact.*—Harrison Feese (202-566-8651). *Status.*—Work plan 79-28 approved; NPRM under joint development by Customs and Fish and Wildlife Service.
Conforming amendments/parts 10, 12, and others.	*Description.*—Conform regulations to provisions of various titles of Public Law 96-39. Trade Agreements Act of 1979. *Need.*—Miscellaneous amendments required by the Trade Agreements Act of 1979. *Authority.*—General. *Contact.*—Benjamin Mahoney (202-566-5765). *Status.*—Work plan 79-31 in review at Treasury Department; Treasury decision under development.
Camets (E.C.S./A.T.A.)/parts 10 and 114.	*Description.*—Substitute use of A.T.A. Camet for E.C.S. Camet in relation to the entry of commercial samples. *Need.*—United States withdrawal from Customs Convention on E.C.S. Camets (TIAS 6632) and accession to the Convention on A.T.A. Camets (TIAS 6631). *Authority.*—General. *Contact.*—Jerrald Worley (202-566-8551). *Status.*—Treasury decision under development.
Entry of noise-emitting merchandise; standards and labeling/part 12.	*Description.*—Regulations to administer the EPA noise emission standard and labeling requirements on certain imported merchandise. *Need.*—To implement provision of Public Law 92-572, Noise Control Act of 1972. *Authority.*—General. *Contact.*—Harrison Feese (202-566-8651). *Status.*—NPRM under joint development by Customs and EPA.
Importation of motor vehicles/sec. 12.73.	*Description.*—Conform regulations governing importation of motor vehicles under Clean Air Act to proposed EPA amendments on Federal emission standards. *Need.*—To implement provisions of Clean Air Act of 1955 as amended by Public Law 95-95. *Authority.*—19 U.S.C. 1484. *Contact.*—Harrison Feese (202-566-8651). *Status.*—NPRM published in Federal Register on July 21, 1980 (45 F.R. 48817).

PART I—*Regulations Under Development*—Continued

Title/Citation (19 CFR —)	*Summary*
Entry of electronic products/secs. 12.90 and 12.91.	*Description.*—Implement FTC labeling requirements for certain imported electronic products. *Need.*—Required by provisions of Public Law 93-523, Public Health Service Act. *Authority.*—General. *Contact.*—Darrell Kast (202-566-5765). *Status.*—NPRM's published Sept. 5, 1975 (40 F.R. 41118) and July 27, 1976 (41 F.R. 31223); procedures under joint development by Customs and FTC.
Entry of energy-using products; labeling/sec. 12.92.	*Description.*—Implement FTC labeling requirements for certain imported energy-using products. *Need.*—Required by provisions of Public Law 94-163, Energy Policy Conservation Act. *Authority.*—General. *Contact.*—Harrison Feese (202-566-8651). *Status.*—NPRM under joint development by Customs and FTC.
In-bond transportation of merchandise/parts 18, 123 and 144.	*Description.*—Change time limits and other rules relating to in-bond transportation of merchandise. *Need.*—To give Customs greater control over merchandise transported in bond. *Authority.* 19 U.S.C. 1552, 1553, 1557, 1623. *Contact.*—J. Bradley Lund (202-566-5354). *Status.*—NPRM published Aug. 13, 1976 (41 F.R. 34271); Treasury decision under development.
Transportation in bond; short shipments/sec. 18.8.	*Description.*—Require entry, for statistical purposes, of merchandise at port of destination in event of nondelivery to Customs of entire shipment or one or more packages in shipment, even if merchandise not recovered intact. *Need.*—Implement provision of Public Law 95-410, Customs Procedural Reform and Simplification Act of 1978. *Authority.*—19 U.S.C. 1484, 1552, 1553. *Contract.*—William Marchi (202-566-8235). *Status.*—Work plan in review in Customs.
Transportation in bond/sec. 18.8.	*Description.*—Increase amount of liquidated damages required/by carrier's bond for shortage, failure to deliver or irregular delivery of duty-free merchandise. Carrier also would be liable for duty on dutiable merchandise, as well as liquidated damages. *Need.*—To clarify carrier's obligations under required bond and provide for liquidated damages as deterrent to violations.

PART I—*Regulations Under Development*—Continued

Title/Citation (19 CFR —)	*Summary*
	Authority.—19 U.S.C. 1551, 1623. *Contact.*—William Rosoff (202-566-5856). *Status.*—Work plan 79-11 approved; NPRM under development.
Customs warehouses and container/stations; fees/parts 19 and 24.	*Description.*—Increase fee accompanying application to establish bonded warehouse, require fee with application to alter existing bonded warehouse or to establish container station. *Need.*—Recover costs of services from recipients directly receiving benefits beyond those accruing to general public. *Authority.*—31 U.S.C. 483a. *Contract.*—John Holl (202-566-5354). *Status.*—NPRM published in the Federal Register July 10, 1980 (45 F.R. 46442).
Drawback; identification of entries/part 22.	*Description.*—Require drawback entries be identified at time of entry. *Need.*—To reduce delays in processing drawback claims. *Authority.*—19 U.S.C. 1313; 31 U.S.C. 483a. *Contact.*—George Steuart (202-566-5761). *Status.*—ANPRM under development.
Drawback; bulk-fungible goods/sec. 22.5.	*Description.*—Allow drawback without actual use of bulk-fungible goods if substituted for goods of same kind/quality. *Need.*—To extend to other articles privileges now applicable to petroleum products. *Authority.*—General. *Contact.*—Donald Beach (202-566-5856). *Status.*—Action on NPRM suspended pending economic analysis and study as to whether legislation is required.
Entry of merchandise/parts 24, 141, 142, 144.	*Description.*—To reduce the 10-working day period during which estimated duties must be deposited after merchandise is released under an entry or a permit for immediate delivery. *Need.*—To improve the Government's cash flow by earlier collection of duties. *Authority.*—19 U.S.C. 1484, 1505, 1557. *Contact.*—Benjamin Mahoney (202-566-5765). *Status.*—Possibility of accelerated duty payment remains under study; draft regulatory analysis being prepared; work plan in review at Treasury Department.
Customs accounting procedures, bonds/parts 24 and 113.	*Description.*—Charge interest on delinquent accounts of importers and others with Customs. *Need.*—To encourage importers to pay Customs bills promptly and thereby improve cash flow. *Authority.*—19 U.S.C. 1623.

PART I—*Regulations Under Development*—Continued

Title/Citation (19 CFR —)	*Summary*
	Contact.—Robert B. Hamilton (202–566–2598). *Status.*—Work plan 80–2 approved; NPRM under development.
Customhouse brokers/part 111	*Description.*—Amend regulations relating to responsibilities of customhouse brokers. *Need.*—To clarify responsibilities of customhouse brokers and to insure uniform compliance with applicable regulations. *Authority.*—19 U.S.C. 1641. *Contact.*—Edward B. Gable, Jr. (202–566–7238). *Status.*—Action on work plan 79–5 suspended pending review of related legislative proposals.
Carriers of bonded merchandise/sec. 112.11.	*Description.*—Revised criteria for designating private carriers of bonded merchandise to require only that they file bonds and transport their own property. *Need.*—To lessen restrictions of prior regulation. *Authority.*—19 U.S.C. 1551. *Contact.*—Donald Beach (202–566–5856). *Status.*—Work plan 79–10 approved; NPRM under development.
Customs bonds/part 113	*Description.*—Consolidation of Customs bonds and related forms. *Need.*—To simply bond structure and language preparatory to expansion of AMPS program. *Authority.*—19 U.S.C. 1623. *Contact.*—Joseph Goody (202–566–4434). *Status.*—ANPRM under development.
Customs bonds, letter of credit/part 113.	*Description.*—Authorize use of letter of credit in lieu of foreign-trade zone bond to guarantee payment of claims made by Customs against a foreign-trade zone operator. *Need.*—To facilitate use of foreign-trade zones. *Authority.*—19 U.S.C. 81c, 1623. *Contact.*—William Rosoff (202–566–5856). *Status.*—NPRM under development (consolidated with trade fairs, sec. 147.45, below).
Contiguous countries, manifest discrepancies/sec. 123.9.	*Description.*—Establish uniform procedures for handling manifest discrepancies of vehicles and certain vessels arriving from contiguous countries. *Need.*—To facilitate entry of vessels and vehicles from Canada or Mexico. *Authority.*—General. *Contact.*—Donald Reusch (200–566–5706). *Status.*—NPRM published July 28, 1978 (43 F.R. 32817); Treasury decision in review at Treasury Department.

PART I—*Regulations Under Development*—Continued

Title/Citation (19 CFR —)	*Summary*
Contiguous countries, railroad equipment/sec. 123.12.	*Description.*—Admission of empty foreign railroad equipment without entry and payment of duty in certain instances. *Need.*—To clarify permitted use of foreign railroad equipment. *Authority.*—General. *Contact.*—Michael Tomenga (202-566-5706). *Status.*—Work plan 79-18 under development.
Contiguous countries; manifest validation/secs. 123.41 and 123.42.	*Description.*—Require truck driver carrying merchandise between United States and Canada to present manifest for validation by U.S. Customs at U.S. port of departure. *Need.*—Jointly initiated by United States and Canadian Customs to prevent evasion of duty when merchandise reenters United States from Canada on in-transit documentation. *Authority.*—19 U.S.C. 1553, 1554. *Contact.*—J. Bradley Lund (200-566-5354). *Status.*—NPRM published Dec. 9, 1976 (41 F.R. 53810): new NPRM under development.
Copyright/part 133	*Description.*—Amendments to regulations relating to recordation of copyrights with Customs. *Need.*—To implement provisions of Public Law 94-533, Copyright Act of 1976. *Authority.*—17 U.S.C. 1603. *Contact.*—Samuel Orandle (202-566-5765). *Status.*—NPRM under joint development by Customs and Copyright Office.
Entry of merchandise; special permits for immediate delivery/parts 141 and 142.	*Description.*—Revise consumption entry (Customs form 7501) to accommodate new entry procedures. *Need.*—To implement provisions of Public Law 95-410, Customs Procedural Reform and Simplification Act of 1978. *Authority.*—19 U.S.C. 1484. *Contact.*—William Wagner (202-566-5307). *Status.*—Request for comments on the proposed form published May 23, 1979 (44 F.R. 29916); comments under review at Customs.
Entry of merchandise/sec. 141.89.	*Description.*—To revise the additional information required on entry of footwear. *Need.*—To assist Customs in the appraisement and classification of imported footwear. *Authority.*—19 U.S.C. 1202, 1481, 1484. *Contact.*—Linda Mays (202-566-8592). *Status.*—NPRM published July 28, 1978 (43 F.R. 32819); after consideration of comments, a second NPRM under development.

324-901 O - 80 - 3

PART I—*Regulations Under Development*—Continued

Title/Citation (19 CFR —)	*Summary*
Foreign-trade zones/sec. 146.48	*Description.*—Change of appraisement practice involving costs of processing and profit for certain merchandise produced in foreign-trade zones. *Need.*—To encourage use of domestic labor and materials in foreign-trade zones. *Authority.*—19 U.S.C. 81h. *Contact.*—Thomas Lobred (202-566-8181). *Status.*—NPRM published May 21, 1979 (44 F.R. 29489); Treasury decision 80-87 published Mar. 20, 1980 (45 F.R. 17976).
Trade fairs/sec. 147.45	*Description.*—Removal of trade fair merchandise from foreign-trade zones for consumption without permission of Foreign-Trade Zones Board. *Need.*—Amendments required to implement provisions of Public Law 91-692. *Authority.*—19 U.S.C. 81h. *Contact.*—William Rosoff (202-566-5856). *Status.*—NPRM under development (consolidated with Customs bonds, letter of credit, part 113, above).
Registration of merchandise/sec. 148.1.	*Description.*—New instructions for registration of personal effects taken abroad. *Need.*—To insure uniform regulation procedures. *Authority.*—19 U.S.C. 1498. *Contact.*—Joseph O'Gorman (202-566-8157). *Status.*—Work plan under development.
Personal declarations and exemptions/sec. 148.73.	*Description.*—Execution of written baggage declarations by military personnel. *Need.*—To conform Customs and DOD regulations. *Authority.*—General. *Contact.*—Donald Thompson (202-566-8164). *Status.*—NPRM under development.
Examination of merchandise/sec. 151.2.	*Description.*—Expand accelerated cargo clearance and entry processing test (ACCEPT), an automated selective merchandise examination system, to various ports of entry. *Need.*—Facilitate movement of merchandise by fewer but more intensive examinations. *Authority.*—19 U.S.C. 1202, 1499. *Contact.*—Michael Lanoue (202-566-5315). *Status.*—Work plan 79-20 approved; NPRM in review at Treasury Department.
Appraisement of merchandise/part 152.	*Description.*—Amendments required by new International Valuation Code agreed to in multilateral trade negotiations.

PART I—*Regulations Under Development*—Continued

Title/Citation (19 CFR —)	*Summary*
	Need.—To implement title II, Customs valuation, of Public Law 96-39, Trade Agreements Act of 1979. *Authority.*—General. *Contact.*—Thomas Lobred (202-566-8181). *Status.*—Work plan 79-26 approved; NPRM published Mar. 31, 1980 (45 F.R. 20912), Treasury decision under development.
Recordkeeping, inspection, search, and seizure/sec. 162.47.	*Description.*—Waiver of bond requirements by District Director for individuals who show proof of inability to obtain bond. *Need.*—Decisions of U.S. Courts of Appeals, *Wiren* v. *Eide*, 542, F. 2d 757 (9 Cir. 1976) and *Lee & Rich* v. *Thornton*, 538 F. 2d, 27 (2 Cir. 1976). *Authority.*—General. *Contact.*—Joseph Priddy (202-566-8332). *Status.*—Treasury decision under development.

PART II—*Existing Regulations To Be Reviewed*

Title/Citation (19 CFR —)	*Summary*
Bond/part 18	*Description.*—Transportation in bond and merchandise in transit. *Need.*—To insure consistency of format and style. *Contact.*—James Seal (202-566-8237). *Status.*—Customs review of draft completed; NPRM under development.
Finance/part 24	*Description.*—Customs financial and accounting procedure. *Need.*—To insure consistency of format and Style. *Contact.*—James Seal (202-566-8237). *Status.*—Customs review of draft completed; NPRM under development.
Duties/parts 10 and 54	*Description.*—Articles conditionally free, subject to reduced rate, etc. and certain importations temporarily free of duty. *Need.*—To insure consistency of format and style. *Contact.*—Jenny Johnson (202-566-8237). *Status.*—Customs review of draft completed; NPRM under development.
Freedom of Information/part 103.	*Description.*—Availability of information. *Need.*—To conform to amendments to Freedom of Information Act made by Public Law 93-502. *Contact.*—Harold Loring (202-566-8237). *Status.*—NPRM published Aug. 20, 1979 (44 F.R. 48709); Treasury decision under development.

PART II—*Existing Regulations To Be Revised*—Continued

Title/Citation (19 CFR —)	*Summary*
Drawback/part 22	*Description.*—Drawback. *Need.*—To modernize procedures relating to claims for drawback. *Contact.*—George Steuart (202-566-5761). *Status.*—Customs review or draft completed; NPRM under development.

(521797)

Notice of Desire To Contest Decision on American Manufacturer's Petition Concerning the Reclassification of Certain Machine-Processed Cigarette Leaf Tobacco

AGENCY: U.S. Customs Service, Department of the Treasury.

ACTION: Notice of desire to contest a decision on an American manufacturer's petition.

SUMMARY: In response to an American manufacturer's petition requesting that certain machine-processed cigarette leaf tobacco, formerly classified by Customs as scrap tobacco, in item 170.60, Tariff Schedules of the United States (TSUS), be reclassified as stemmed cigarette leaf filler tobacco, in item 170.35, TSUS, the Customs Service concluded that the subject merchandise had been processed to the extent that it was to be considered a partially manufactured product, classifiable under the provision for tobacco, manufactured or not manufactured, not specially provided for, in item 170.80, TSUS. Subsequently, the petitioner filed notice of his desire to contest Customs decision.

FOR FURTHER INFORMATION CONTACT: John G. Hurley, Classification and Value Division, U.S. Customs Service, 1301 Constitution Avenue NW., Washington, D.C. 20229; 202-566-5940.

SUPPLEMENTARY INFORMATION:

BACKGROUND

Under the authority of section 516, Tariff Act of 1930, as amended (19 U.S.C. 1516), an American producer of flue-cured tobacco filed a petition requesting that certain imported machine-processed cigarette leaf tobacco, formerly classified by Customs under the provision for scrap tobacco, in item 170.60, Tariff Schedules of the United States (TSUS), be reclassified under the provision for stemmed cigarette leaf filler tobacco, in item 170.35, TSUS. Upon reviewing the manner in which the subject tobacco was produced, and considering comments received in response to a notice published in the Federal Register on September 28, 1979 (44 F.R. 56089), announcing the receipt of the

petition, the Customs Service concluded that the merchandise in question was neither scrap tobacco nor tobacco in leaf form, but had been processed to the extent that it was to be considered a partially manufactured product classifiable under the provision for tobacco, manufactured or not manufactured, not specially provided for, in item 170.80, TSUS.

By letter dated May 22, 1980, file 060864, the petitioner was informed of Customs decision in the matter. The decision was also published as T.D. 80–132 in the May 20, 1980, edition of the Federal Register (45 F.R. 33761) and in the May 28, 1980, edition of the CUSTOMS BULLETIN. The petitioner has informed Customs of his desire to contest this decision in accordance with section 516(c), Tariff Act of 1930, as amended (19 U.S.C. 1516(c)), and section 175.23 of the Customs Regulations (19 CFR 175.23). However, under section 516(e) of the Tariff Act, merchandise of the character covered by T.D. 80–132 will continue to be classified in accordance with that decision when entered for consumption or withdrawn from warehouse for consumption on or before the date of publication of a decision of the U.S. Customs Court or of the U.S. Court of Customs and Patent Appeals which is not in harmony with T.D. 80–132.

AUTHORITY

This notice is being published in accordance with section 516(c), Tariff Act of 1930, as amended (19 U.S.C. 1516(c)), and section 175.24 of the Customs Regulations (19 CFR 175.24).

Dated: July 24, 1980.

WILLIAM T. ARCHEY,
Acting Commissioner of Customs.

Decisions of the United States Customs Court

United States Customs Court

One Federal Plaza

New York, N.Y. 10007

Chief Judge

Edward D. Re

Judges

Paul P. Rao
Morgan Ford
Scovel Richardson
Frederick Landis
James L. Watson
Herbert N. Maletz
Bernard Newman
Nils A. Boe

Senior Judge

Samuel M. Rosenstein

Clerk

Joseph E. Lombardi

Customs Decision

(C.D. 4863)

ASG INDUSTRIES, INC., PPG INDUSTRIES, INC., LIBBEY-OWENS-FORD COMPANY, AND C E GLASS, PLAINTIFFS, *v.* UNITED STATES, DEFENDANT

On Plaintiffs' Motion and Defendant's Cross-Motion for Summary Judgment

Court No. 76-3-00668

[Plaintiffs' motion granted; defendant's cross-motion denied.]

(Dated July 17, 1980)

Eugene L. Stewart and *Frederick L. Ikenson* for the plaintiffs.
Alice Daniel, Assistant Attorney General (*David M. Cohen*, Branch Director;

Joseph I. Liebman, Attorney in Charge, Field Office for Customs Litigation; *John J. Mahon* and *Sidney N. Weiss* on the briefs), for the defendant.

FORD, Judge: This action, instituted by domestic manufacturers and wholesalers of float glass, presents the issue of whether countervailing duties should be assessed on importations of float glass produced in Belgium. The Secretary of the Treasury (Secretary) has determined that no bounty or grant was paid or bestowed, within the meaning of section 303(a) of the Tariff Act of 1930, as amended by section 331(a) of the Trade Act of 1974, 88 Stat. 1978, 2049.

The parties have filed cross-motions for summary judgment, pursuant to rules 4.12 and 8.2 of the rules of this court.

Plaintiffs contend that various regional development programs administered by the Belgium Government, which include low-interest loans, investment subsidies in the form of cash grants, special accelerated depreciation rates at twice the normal rate, and exemptions from real estate taxes for a maximum period of 5 years, constitute bounties or grants being paid or bestowed upon the manufacture or production of float glass in Belgium.

Defendant's position is that the alleged bounties or grants do not possess the requisite effect upon international trade which would require imposition of countervailing duties.

The essential facts relating to the assistance given the two float glass manufacturers in Belgium are not in dispute, nor is the chronology leading to the final determination of the Secretary in finding that such assistance did not amount to a bounty or grant within the meaning of section 303(a), as amended, supra.

The statement of material facts, filed by the parties, establish that Boussois-Souchan-Neuvesel (BSN) and Glaceries de Saint-Roch (GSR) are the two manufacturers of float glass in Belgium. On June 3, 1974, plaintiffs filed a written petition with the Commissioner of Customs alleging bounties or grants were being paid or bestowed, directly or indirectly, upon the manufacture or production of float glass for export to the United States. A notice of receipt of countervailing duty petitions was published in the Federal Register on January 15, 1975. As a result of the petition, an administrative investigation was conducted by the Department of Treasury, with the assistance of the U.S. Customs Service, pursuant to 19 U.S.C. 1303 and 19 CFR 159.47(c) (1975), in order to make preliminary and final determinations.

On July 3, 1975 a notice of preliminary countervailing duty determination was published in the Federal Register, 40 F.R. 28104, which states in part as follows:

> On the basis of an investigation conducted pursuant to section 159.47(c) Customs Regulations (19 CFR 159.47(c)), it has been

tentatively determined that benefits have been received under various regional development programs maintained by the Belgian Government. Assistance available in development areas includes interest rebates on loans or payment of equivalent amounts where investor capital is utilized, employment premiums, reduced rate of capital gains tax, tax exemptions for interest rate subsidies and capital grants on investments, exemption from registration fees levied on increases in assets, exemption from real estate taxes, advanced depreciation and exemption from local taxes.

Benefits derived from programs such as those which are the subject of this investigation can, in some circumstances, constitute bounties or grants within the meaning of the law. Since the information thus far made available concerning these programs has not been sufficient to permit a thorough analysis of their nature and effect, it has been determined preliminarily that imports of float glass from Belgium benefit from the payment or bestowal of a bounty or grant, directly or indirectly, within the meaning of section 303 of the Tariff Act of 1930, as amended, by reason of the incentive programs mentioned above.

Before a final determination is made, consideration will be given to any relevant data, views, or arguments submitted in writing with respect to this preliminary determination. Submissions should be addressed to the Commissioner of Customs, 1301 Constitution Avenue NW., Washington, D.C. 20229, in time to be received by his office on or before August 4, 1975.

On August 15, 1975, an amendment to notices of preliminary countervailing duty determinations was published in the Federal Register, 40 F.R. 34423, which extended to September 3, 1975, the time within which submissions with respect to the preliminary determination would be accepted.

A notice of final countervailing duty determination was published in the Federal Register, 41 F.R. 1299, on January 7, 1976, which set forth the following reasons for the determination:

Information has now been received that permits a more complete analysis of the alleged bounties and grants. Under various regional development programs administered by the Government of Belgium, low-interest loans, investment subsidies in the form of cash grants, special accelerated depreciation rates and exemption from real estate taxes have been given to producers of float glass. The Belgian Government has advised the Treasury Department that these benefits have the effect of offsetting disadvantages which would discourage industry from moving to and expanding in less prosperous regions. Inasmuch as the recipient glass producers sell a preponderance of their production in the European Community (not less than 85 percent), the level of exports to the United States is a small percentage of the amount exported, and the amount of assistance provided by the regional incentive programs is less than 2 percent of the value of float glass produced, these benefits are not regarded as bounties or

grants within the meaning of section 303 of the act. All other benefits alleged in the petition are found either not to be bounties or grants or not to be applicable to the producers of float glass in Belgium.

Accordingly, for the reasons stated above, it is hereby determined that no bounty or grant is being paid or bestowed, directly or indirectly, within the meaning of section 303 of the act, upon the manufacture, production, or exportation of float glass from Belgium.

On January 28, 1976, plaintiffs served a notice upon the Secretary, pursuant to 19 U.S.C. 1516(d), advising of plaintiffs' desire to contest the negative determination before the Customs Court and requesting that publication of the notice be made forthwith as required by 19 U.S.C. 1516(d).

On March 10, 1976, a notice entitled "Assessment of Countervailing Duties on Float Glass from Belgium" was issued by the Acting Commissioner of Customs, approved by the Assistant Secretary of Treasury, published in the Federal Register, 41 F.R. 10235, and contained the announcement that notification had been received from the plaintiffs that they desire to contest the negative countervailing duty determination.

On March 15, 1976, the summons in this action was filed with the Customs Court on behalf of plaintiffs.

The pertinent statutory provisions are as follows:

Section 303(a) of the Tariff Act of 1930, as amended by section 331(a) of the Trade Act of 1974, 88 Stat. 2049 (19 U.S.C., section 1303):

Countervailing duties:

(a) *Levy of countervailing duties.*—(1) Whenever any country, dependency, colony, province, or other political subdivision of government, person, partnership, association, cartel, or corporation, shall pay or bestow, directly or indirectly, any bounty or grant upon the manufacture or production or export of any article or merchandise manufactured or produced in such country, dependency, colony, province, or other political subdivision of government, then upon the importation of such article or merchandise into the United States, whether the same shall be imported directly from the country of production or otherwise, and whether such article or merchandise is imported in the same condition as when exported from the country of production or has been changed in condition by remanufacture or otherwise, there shall be levied and paid, in all such cases, in addition to any duties otherwise imposed, a duty equal to the net amount of such bounty or grant, however the same be paid or bestowed.

* * * * * * *

(3) In the case of any imported article or merchandise as to which the Secretary of the Treasury (hereafter in this section

referred to as the Secretary) has not determined whether or not any bounty or grant is being paid or bestowed—

(A) upon the filing of a petition by any person setting forth his belief that a bounty or grant is being paid or bestowed, and the reasons therefor, or

(B) whenever the Secretary concludes, from information presented to him or to any person to whom authority under this section has been delegated, that a formal investigation is warranted into the question of whether a bounty or grant is being paid or bestowed,

the Secretary shall initiate a formal investigation to determine whether or not any bounty or grant is being paid or bestowed and shall publish in the Federal Register notice of the initiation of such investigation.

(4) Within 6 months from the date on which a petition is filed under paragraph (3)(A) or on which notice is published of an investigation initiated under paragraph (3)(B), the Secretary shall make a preliminary determination, and within 12 months from such date shall make a final determination, as to whether or not any bounty or grant is being paid or bestowed.

(5) The Secretary shall from time to time ascertain and determine, or estimate, the net amount of each such bounty or grant, and shall declare the net amount so determined or estimated.

* * * * * * *

Section 516(d) of the Tariff Act of 1930, as amended by section 321(f)(1) of the Trade Act of 1974, 88 Stat. 2048 (19 U.S.C. 1516):

Petitions by American manufacturers, producers, or wholesalers:

* * * * * * *

(d) *Contest of Secretary's determination that foreign merchandise is not being sold in United States at less than fair value or that bounty or grant is not being paid—*

Within 30 days after a determination by the Secretary—

(1) under section 160 of this title, that a class or kind of foreign merchandise is not being, nor likely to be, sold in the United States at less than its fair value, or

(2) under section 1303 of this title, that a bounty or grant is not being paid or bestowed,

an American manufacturer, producer, or wholesaler of merchandise of the same class or kind as that described in such determination may file with the Secretary a written notice of a desire to contest such determination. Upon receipt of such notice the Secretary shall cause publication to be made thereof and of such manufacturer's, producer's, or wholesaler's desire to contest the determination. Within 30 days after such publication, such manufacturer, producer, or wholesaler may commence an action in the U.S. Customs Court contesting such determination.

* * * * * * *

28 U.S.C. 1582:

Jurisdiction of the Customs Court:

* * * * * * *

(b) The Customs Court shall have exclusive jurisdiction of civil actions brought by American manufacturers, producers, or wholesalers pursuant to section 516 of the Tariff Act of 1930, as amended.

The facts relating to the programs established by the Belgium Government and the assistance covered by them are not in dispute. The information submitted to the court on these cross-motions for summary judgment is subject to some extent to a protective order entered by the court on June 9, 1977, and modified on July 13, 1977.

In July 1959 the Belgium Government established a regional aid program under which certain benefits were extended in order to encourage the establishment, extension, conversion, and modernization of facilities. Originally, this aid applied to any portion of the country but was subsequently limited to areas specifically designated as less-developed regions.

The system of incentives for investment was organized by the Economic Expansion Act of December 30, 1970. The decisions rested with the Minister of Economic Affairs, while the criteria for obtaining benefits were set forth by:

1. The act itself;
2. Royal decrees or executory measures;
3. General guidelines with the Department of Economic Affairs.

The Economic Expansion Act defined certain conditions which a particular project must satisfy in order to receive benefits. The investment must take place in a designated development area; it must directly contribute to the expansion, conversion, or modernization of the business; and must conform to the general economic interests. These interests were defined by Royal decree, dated August 18, 1959, and included the following:

1. The creation of work in the framework of employment policy;
2. The creation of new industries and the manufacturing of new products;
3. The development of existing businesses which are adaptable to new market conditions;
4. The improvement of the situation in economically depressed areas;
5. The more rational use of Belgium's economic resources;
6. The improvement of working conditions, manufacturing conditions through increased profits and the quality of products; and
7. The development of research equipment.

Under the above programs, assistance was given by the Belgium Government, insofar as this case is concerned, in four categories:

Low-interest loans were made available in the form of interest rate rebates. Such rebates, up to a maximum of 5 percent for 5 years, could be applied to investment loans granted by approved financial institutions. Both BSN and GSR utilized this benefit.

Investment subsidies in the form of cash grants were provided pursuant to article 9 of the Economic Expansion Act of December 30, 1970. These cash grants were provided to the extent that a company made investments from its own funds. The grant replaced the interest rate rebate. In other words, to the extent that a company made investments from its own funds, the interest rate rebate may be replaced by capital grants of equal value. A capital grant was provided only if the financial contribution made by the investing company from its own funds exceeded 50 percent of the cost of the program. BSN utilized the benefits of investment subsidies, while GSR did not avail itself of this benefit.

Pursuant to article 15, section 1 of the Economic Expansion Act of December 30, 1970, and article 12 of the Economic Expansion Act of July 14, 1966, firms were authorized to apply an annual rate of depreciation equal to twice the normal rate of depreciation over a period of 3 consecutive tax years for such investments which were made under this program. GSR availed itself of this benefit, while BSN did not.

Exemptions from real estate taxes were provided for under article 16 of the Economic Expansion Act of December 30, 1970. Under this provision firms which qualify for regional aid benefits may be exempt, for a maximum of 5 years, from paying real estate taxes. The exemption from real estate taxes was utilized by BSN, but not by GSR.

The record further establishes that at the time of the issuance of the notice of final countervailing duty determination supra, with respect to float glass from Belgium, the Treasury Department had before it information which indicated the recipient glass producers sold a preponderance of their production in the European market (not less than 85 percent) and that the level of exports to the United States was a small percentage of the amount exported. The notice also stated that the amount of assistance provided by the regional incentive programs amounted to less than 2 percent of the value of the float glass in Belgium.

In a recent decision, *ASG Industries, Inc., et al* v. *United States*, 67 CCPA——, C.A.D. 1237 (1979), which involved float glass manufactured in West Germany, the court considered benefits such as low-interest loans, investment subsidies in the form of cash grants, and tax credits granted under regional development programs. The court therein found the benefits to be bounties or grants and made the following observations:

Also, we hold that, for purposes of the countervailing duty law, the benefits (as analyzed above) bestowed by West Germany upon float glass manufacturers under the regional development programs were bounties or grants.[13]

At the same time, it must also be pointed out that appellants' proposed test (any benefit, that is not *de minimis*, bestowed by a foreign government in connection with the production of merchandise requires a countervailing duty) ignores the clear wording of the statute. Once it has been determined that a bounty or grant is being paid or bestowed, 19 U.S.C. 1303(a)(1) provides that "there shall be levied * * * a duty equal to the *net amount* of such bounty or grant." [Italic supplied.] Such language implies that certain deductions may be made from the actual payments to calculate the net bounty or grant and that all relevant circumstances are to be taken into account.[14]

[13] The Customs Court said "it would appear that bounties or grants were bestowed on the production of float glass in the Federal Republic of Germany."

[14] Congress reiterated this net amount concept in the legislative history of the extension of the waiver provision (note 9, supra): "The countervailing duty, which is imposed in addition to regular duties, is equal to the *net amount* of the bounty or grant and is intended to offset the *advantage* afforded by the foreign subsidy practice." [Italic added.] S. Rep. No. 96–45, 96th Cong., 1st sess. 2, reprinted in (May 1979) United States Code Cong. & Ad. News No. 3, 488, 489.

With respect to the waiver provision, section 303(d), as amended by section 331(a) of the Trade Act of 1974, 88 Stat. 1978, 2049, the court in its decision stated as follows:

By section 331(a) of the Trade Act of 1974, Public Law No. 93–618, 88 Stat. 1978 (1975), Congress amended section 303 of the Tariff Act of 1930. Under new section 303(d) (19 U.S.C. 1303(d) (supp. V 1975)),[9] which was added by this amendment, the Secretary could waive imposition[10] of a countervailing duty if: (1) Steps were taken to reduce substantially or eliminate the adverse effect of the bounty or grant; (2) there was reasonable prospect of trade agreements reducing or eliminating barriers to, or other distortions of, international trade; and (3) imposition of a countervailing duty would be likely to seriously jeopardize the negotiation of such agreements. 19 U.S.C. 1303(d)(2) (A)–(C).

During consideration of the bill (H.R. 10710) that became the Trade Act of 1974, it was made clear that all three conditions must be met before the Secretary could waive application of a countervailing duty, and it was emphasized that "either the bounty or grant or its adverse effect must be eliminated (or substantially reduced) before the Secretary would have authority to waive the imposition of a countervailing duty order during trade negotiations." It was explained that the amendments to the countervailing duty law "are designed to tighten the administration" of that law. S. Rep. No. 93–1298, 93d Cong., 2d sess. 185 and 187, reprinted in [1974] U.S. Code Cong. & Ad. News 7320 and 7322. * * *

Congress also made clear its understanding that "the present [countervailing duty] statute is mandatory in terms." H.R. Rep. No. 93-571, 93d Cong., 1st sess. 73 (1973). This demonstrates that, except for the waiver provision in the 1974 act, the Secretary has not had any discretion to not impose a countervailing duty once it has been determined that a bounty or grant is being paid or bestowed. *American Express Co.* v. *United States*, 60 CCPA 86, 93, 472 F. 2d 1050, 1056 (1973). * * *

[9] 19 U.S.C. 1303(d) (Supp. V 1975) reads as follows:

"(d) *Temporary provision while negotiations are in progress.* (1) It is the sense of the Congress that the President, to the extent practicable and consistent with U.S. interest, seek through negotiations the establishment of internationally agreed rules and procedures governing the use of subsidies (and other export incentives) and the application of countervailing duties.

"(2) If, after seeking information and advice from such agencies as he may deem appropriate, the Secretary of the Treasury determines, at any time during the 4-year period beginning on January 3, 1975, that—

"(A) adequate steps have been taken to reduce substantially or eliminate during such period the adverse effect of a bounty or grant which he has determined is being paid or bestowed with respect to any article or merchandise;

"(B) there is a reasonable prospect that, under section 2112 of this title, successful trade agreements will be entered into with foreign countries or instrumentalities providing for the reduction or elimination of barriers to or other distortions of international trade; and

"(C) the imposition of the additional duty under this section with respect to such article or merchandise would be likely to seriously jeopardize the satisfactory completion of such negotiations;

the imposition of the additional duty under this section with respect to such article or merchandise shall not be required during the remainder of such 4-year period. This paragraph shall not apply with respect to any case involving nonrubber footwear pending on January 3, 1975, until and unless agreements which temporize imports of nonrubber footwear become effective.

"(3) The determination of the Secretary under paragraph (2) may be revoked by him, in his discretion, at any time, and any determination made under such paragraph shall be revoked whenever the basis supporting such determination no longer exists. The additional duty provided under this section shall apply with respect to any affected articles or merchandise entered, or withdrawn from warehouse, for consumption on or after the date of publication of any revocation under this subsection in the Federal Register."

[10] The Secretary's authority to waive imposition of countervailing duties was extended to July 26, 1979 (date of enactment

of the Trade Agreements Act of 1979, Public Law No. 96-39), retroactive to January 3, 1979, when the previous waiver authority expired. Public Law No. 96-6, 93 Stat. 10 (1979).

It is to be noted no question of waiver by the Secretary is involved herein. The benefits granted are, under the above decision, bounties or grants subject to countervailing duty. It is the function of the Secretary in cases involving bounties or grants to determine the net bounty. Since the Secretary in this case determined that no countervailing duty was attached, no such finding was made. The Court of Customs and Patent Appeals in C.A.D. 1237, supra, made the following comment:

> Once it is established that a foreign manufacturer is receiving payments such as those here involved (not every payment, as the dissenting opinion imagines) from its government, a countervailing duty must, absent a waiver by the Secretary, be imposed unless, in considering all circumstances surrounding the payment, certain deductions can be established resulting in no net benefit to that manufacturer. These deductions must be established by facts [16]—not by mere allegations of the foreign government or of the enterprises receiving the bounty or grant. Needless to say, without an adequate factual record, neither this court nor the Customs Court can perform a meaningful judicial review of countervailing duty determinations.
>
> [16] If the Treasury Department cannot, with its expertise, establish the necessary facts, a countervailing duty must be imposed, although a challenge may be brought later by the importer. Because the importer is in a better position to obtain these facts from the foreign manufacturer, once a prima facie case has been established by the evidence that payments such as those here involved are being made, the domestic manufacturer should not (contrary to the dissenting opinion) have the burden of obtaining evidence of deductions necessary to negate its own prima facie case. Also, we note that under 19 U.S.C. 1303(a)(5), the Secretary is permitted to estimate the net bounty (i.e., estimate the necessary deductions), and his expertise will pay a part in this estimate as long as there is a factual basis to support it.

In view of the foregoing, plaintiffs' motion for summary judgment is granted and defendant's cross-motion for summary judgment is denied.

It is further ordered that the Secretary of the Treasury: (1) Ascertain and determine or estimate the net amount of bounties or grants paid or bestowed upon the manufacture or production of float glass in Belgium by Boussois-Souchan-Neuvesel and Glaceries de Saint-Roch; and (2) direct the appropriate Customs officers throughout the United States to assess countervailing duties in the net amount equal to said bounties or grants, entered or withdrawn from warehouse for consumption on or after the day following the date of entry of this order.

Decisions of the United States Customs Court

Abstracts

Abstracted Protest Decisions

DEPARTMENT OF THE TREASURY, *July 21, 1980.*

The following abstracts of decisions of the United States Customs Court at New York are published for the information and guidance of officers of the customs and others concerned. Although the decisions are not of sufficient general interest to print in full, the summary herein given will be of assistance to customs officials in easily locating cases and tracing important facts.

ROBERT E. CHASEN,
Commissioner of Customs.

DECISION NUMBER	JUDGE & DATE OF DECISION	PLAINTIFF	COURT NO.	ASSESSED	HELD	BASIS	PORT OF ENTRY AND MERCHANDISE
				Par. or Item No. and Rate	Par. or Item No. and Rate		
P80/113	Rao, J. July 14, 1980	F. W. Myers (Atlantic) & Co., Inc.	79-11-01749	Item 683.50 6.5% (shaver) Item 682.60 7.5% (charger)	Item 683.50 6.5% Dutiable as entireties; proper appraised value is $18.90 each, packed, less ocean freight and insurance.	Judgment on the pleadings	New York Electric shavers with rechargeable batteries and their charging plugs; entireties.

P80/114	Maletz, J. July 14, 1980	Nancy Sales Company, Inc.	76-7-01727	Item 546.52 50%	Item 546.35 20%	Agreed statement of facts	Boston Glass beer mugs
P80/115	Boe, J. July 15, 1980	Westinghouse Trading Corp.	78-4-00588	Item 536.10 22.5%	Item 535.14 15%	Judgment on the pleadings	New York Translucent alumina tubes

Decisions of the United States Customs Court

Abstracts

Abstracted Reappraisement Decisions

DECISION NUMBER	JUDGE & DATE OF DECISION	PLAINTIFF	COURT NO.	BASIS OF VALUATION	HELD VALUE	BASIS	PORT OF ENTRY AND MERCHANDISE
R80/219	Re, C. J. July 14, 1980	Marubeni America Corp.	76-1-00262	Export value	Unit values found by appraising customs official, less ocean freight and marine insurance, without additions to said values for currency fluctuation	C.B.S. Imports Corp. v. U.S. (C.D. 4739)	New York Fabric
R80/220	Boe, J. July 14, 1980	Gehrig, Hoban & Co., Inc.	R69/29	United States value	Determined by adding to f.o.b. unit invoice price in Swiss francs converted to a dollar value at rate of exchange in effect at time of entry (the "claimed value"), 53% of difference between claimed value and appraised value	Agreed statement of facts	Los Angeles Machine tools and accessories and parts thereof

R80/221	Newman, J. July 15, 1980	Gehrig, Hoban & Co., Inc.	R69/7475, etc.	United States value	Determined by adding to f.o.b. unit invoice price in Swiss francs converted to a dollar value at rate of exchange in effect at time of entry (the "claimed value"), 53% of difference between claimed value and appraised value	Agreed statement of facts	New York Machine tools and accessories and parts thereof
R80/222	Boe, J. July 15, 1980	Sabrina Knits Ltd. et al.	76-5-01306, etc.	Constructed value	Invoice unit values plus an additional 5% of costs for materials and for shipping materials from place of manufacture of materials to place of manufacture of finished imported product (Hong Kong)	Agreed statement of facts	New York Wearing apparel

Appeals to U.S. Court of Customs and Patent Appeals

APPEAL 80–33.—United States *v.* Siemens America, Inc.—SURGE VOLTAGE PROTECTORS—ELECTRICAL APPARATUS—ELECTRONIC TUBES—TSUS. Appeal from C.D. 4856.

In this case certain gas tube surge voltage protectors were assessed with duty at the rate of 14, 12, 10, or 8.5 percent ad valorem, depending upon the year of entry, under the provision in item 685.90, Tariff Schedules of the United States, as modified by T.D. 68–9, for other electrical apparatus for the protection of electrical circuits. Plaintiff-appellee claimed that the merchandise was properly dutiable at the rate of 9.5, 8, 7, or 6 percent, depending upon the year of entry, under the provision in item 709.66, as modified, for apparatus based on the use of radiations from radioactive substances. Alternatively, plaintiff claimed that the merchandise was dutiable at the rate of 10, 8.5, 7, or 6 percent, depending upon the year of entry, under the provision in item 687.60, as modified, for other electronic tubes. The Customs Court sustained plaintiff's alternative claim under item 687.60 and dismissed plaintiff's primary claim under item 709.66.

It is claimed that the Customs Court erred in finding and holding that the merchandise is properly classifiable under item 687.60; in not finding that the merchandise was properly classified under item 685.90; in finding and holding that the merchandise was most specifically described under item 687.60.

APPEAL 80–34.—United States *v.* Sanyo Electric, Inc.—POWER FAILURE LIGHTS—FLASHLIGHTS—ELECTRICAL ARTICLES—TSUS. Appeal from C.D. 4855.

In this case merchandise described on the invoices as power failure lights was assessed with duty at the rate of 35 percent ad valorem under item 683.70, Tariff Schedules of the United States, as flashlights. The Customs Court held that the merchandise was properly dutiable, as claimed by plaintiff-appellee, at the rate of 5.5 percent under the provision in item 688.40, as modified by T.D. 68–9, for electrical articles, not specially provided for.

It is claimed that the Customs Court erred in granting judgment for the plaintiff and in not entering judgment for defendant dismissing the action; in not finding that the subject merchandise was classifiable under item 683.70; in finding and holding that the merchandise is properly classifiable under item 688.40; in finding and holding that the merchandise is not a flashlight.

Recent Unpublished Customs Service Decisions

The following listing of recent administrative decisions issued by the Office of Regulations and Rulings, U.S. Customs Service, and not otherwise published, is published for the information of Customs officers and the importing community. Although the decisions are not of sufficient general interest to warrant publication as Treasury decisions, the listing describes the issues involved and is intended to aid Customs officers and concerned members of the public in identifying matters of interest which recently have been considered by the Office of Regulations and Rulings.

A copy of any decision included in this listing, identified by its date and file number, may be obtained in a form appropriate for public distribution upon written request to the Office of Regulations and Rulings, attention: Legal Reference Area, room 2404, U.S. Customs Service, 1301 Constitution Avenue NW., Washington, D.C. 20229. These copies will be made available at a cost to the requester of 10 cents per page. However, the Customs Service will waive this charge if the total number of pages copied is 10 or less.

Decisions listed in earlier issues of the CUSTOMS BULLETIN, through March 24, 1980, are available in microfiche format at a cost of $21.15 (15 cents per sheet of fiche). It is anticipated that additions to the microfiche will be made quarterly and subscriptions are available. Requests for the microfiche now available and for subscriptions should be directed to the Legal Reference Area. Subscribers will automatically receive updates as they are issued and will be billed accordingly.

Dated: July 25, 1980.

JOHN T. ROTH,
Acting Director,
Regulations and Research Division.

Date of Decision	File Number	Issue
6-27-80	712975	Prohibited and restricted importations: Copyright infringement: Whether book consisting of both textual and pictorial material is preponderantly of protected material

Date of decision	File Number	Issue
6–26–80	713060	Entry: Entry requirements for oil from deep water port of the United States
6–25–80	061597	Classification: Lace brassieres (376.24)
6–25–80	064217	Classification: Determination of component material of chief value of shoe uppers
6– 4–80	064291	Classification: Velveteen emblems used on identification shields and plaques (386.09)
6– 4–80	064399	Classification: Pressure-fixing magnetic toner (432.25, 474.20)
6– 4–80	064429	Classification: Plastic articles used to prepare wedding cakes (772.15)
5–21–80	064461	Classification: Rare earth chloride (601.66, 603.70)
6–26–80	064546	Classification: Fibrillated polypropylene film (774.55)
7– 8–80	064961	Classification: Wooden fruit bowls, vases, and lamp bases (206.98, 207.00)
6–16–80	065003	Classification: Pina colada mix (166.40, 182.98)
5–19–80	065017	Classification: Crane hook (657.25, 664.10)
6–25–80	066013	Classification: Window shade rollers (654.01, 660.80)

International Trade Commission Notices

Investigations by the U.S. International Trade Commission

DEPARTMENT OF THE TREASURY

The appended notices relating to investigations by the U.S. International Trade Commission are published for the information of Customs officers and others concerned.

R. E. CHASEN,
Commissioner of Customs.

In the Matter of CERTAIN ADJUSTABLE WINDOW SHADES AND COMPONENTS THEREOF	Investigation No. 337–TA–83

Notice of Prehearing Conference and Hearing

Notice is hereby given that a prehearing conference will be held in this case at 9 a.m. on August 18, 1980, in the Dodge Center, room 201, 1010 Wisconsin Avenue NW., Washington, D.C. and the hearing will commence immediately thereafter.

The purpose of the prehearing conference is to review the trial memoranda submitted by the parties, to stipulate exhibits into the record, and to discuss any questions raised by the parties relating to the hearing.

The Secretary shall publish this notice in the Federal Register.

Issued: July 21, 1980.

JANET D. SAXON,
Administrative Law Judge.

(TA–201–44)

CERTAIN MOTOR VEHICLES AND CERTAIN CHASSIS AND BODIES THEREFOR

Place of Hearing

Notice is hereby given that the public hearing in this matter set to

begin at 10 a.m., Wednesday, October 8, 1980, will be held in the Great Hall of the U.S. Department of Justice, Constitution Avenue, between 9th and 10th Streets NW., Washington, D.C.

Notice of the investigation and hearing and notice of a change in Commission procedures were published in the Federal Register of July 7, 1980, and July 22, 1980 (45 F.R. 45731 and 45 F.R. 48996, respectively).

By order of the Commission.

Issued: July 28, 1980.

KENNETH R. MASON,
Secretary.

In the Matter of CERTAIN APPARATUS FOR THE CONTINUOUS PRODUCTION OF COPPER ROD	Investigation No. 337-TA-52

Notice of Denial of Southwire's Request to Change the Cease and Desist Orders to Exclusion Orders

On July 22, 1980, the U.S. International Trade Commission issued an action and order denying Southwire's request to change the cease and desist orders to exclusion orders in this case. This denial follows requests of Southwire of April 11, 1980, and July 16, 1980.

Copies of the Commission's action, order, and opinion are available in the Office of the Secretary, U.S. International Trade Commission, 701 E Street NW., Washington, D.C. 20436; 202-523-0161.

By order of the Commission.

Issued: July 22, 1980.

KENNETH R. MASON,
Secretary.

(TA-201-44)

CERTAIN MOTOR VEHICLES AND CERTAIN CHASSIS AND BODIES THEREFOR

Notice of Change in Commission Procedures

AGENCY: U.S. International Trade Commission.

ACTION: Following receipt and consideration of a request from the President that the Commission expedite its investigation, similar requests from the petitioner and various members of the Congress, and letters in opposition to such expedited action, the Commission

has determined that the schedule in this investigation should be revised and is establishing new dates for a hearing and the filing of submissions. The dates and procedures set forth in this notice supersede those set forth in the Commission's notice in this matter published in the Federal Register of July 7, 1980 (45 F.R. 45731).

This schedule is being revised in accordance with section 201(d)(2) of the Trade Act of 1974 (19 U.S.C. 2251(d)(2)), which states that the Commission's determination shall be made "at the earliest practicable time * * * ." In order to complete the investigation at the earliest practicable time, the Commission has decided that: (1) The investigation will not be divided into separate injury and remedy segments with separate hearings and periods for filing documents; and (2) additional staff and Commission resources are being assigned or allocated to the investigation.

A public hearing concerning all issues in the investigation will be held beginning at 10 a.m., e.d.t., Wednesday, October 8, 1980, in Washington, D.C., at a place to be announced. A prehearing conference for the purpose of establishing time limitations for participants in this hearing will be held at 10 a.m., e.d.t., on Tuesday, September 16, 1980, in the hearing room of the U.S. International Trade Commission Building, 701 E Street NW., Washington, D.C. 20436. All persons wishing to appear at the hearing should so notify the Secretary to the Commission, in writing, no later than the close of business Monday, September 15, 1980. The October 8 hearing will be concerned with all issues relating to injury and a possible remedy; the Commission will not hold the separate injury and remedy hearings announced in the earlier notice.

To facilitate the hearing process, it is requested that persons wishing to appear at the hearing submit prehearing briefs enumerating and discussing the issues which they wish to raise at the hearing. Nineteen copies of such prehearing briefs should be submitted to the Secretary to the Commission no later than the close of business Wednesday, October 1, 1980. Copies of any prehearing briefs submitted will be made available for public inspection in the Office of the Secretary. While submission of prehearing briefs does not prohibit submission of prepared statements in accordance with section 201.12(d) of the Commission's Rules of Practice and Procedure (19 CFR 201.12(d)), it would be unnecessary to submit such a statement if a prehearing brief is submitted instead. Therefore, for the purpose of this proceeding, the Commission has waived the requirements of rule section 201.12(d). Any prepared statements submitted will be made a part of the transcript. Oral presentations should, to the extent possible, be limited to issues raised in the prehearing briefs. Posthearing

briefs should be filed with the Secretary no later than the close of business, Friday, October 17, 1980.

Persons not represented by counsel or public officials who have relevant matter to present may give testimony without regard to the suggested prehearing procedures outlined above.

In brief, the calendar of pertinent dates is as follows—

Prehearing report available, September 10;
Notice of hearing appearance due, September 15;
Prehearing conference, September 16;
Prehearing briefs, October 1;
Hearing, October 8;
Posthearing briefs, October 17.

COMMISSION DATA AVAILABLE: The Commission will make available to requesting interested parties by September 10, 1980, a nonconfidential version of the staff prehearing report. It is hoped that statistical data in this report will serve as a common statistical base for presentations at the hearing.

OTHER WRITTEN SUBMISSIONS: Other written submissions, except for posthearing briefs, should be filed with the Secretary to the Commission prior to the public hearing. Commercial financial data which is confidential should be clearly marked "Confidential Business Information" and should be submitted in accord with the requirements of section 201.6 of the Commission's Rules of Practice and Procedure (19 CFR 201.6). Submissions should also conform to the general requirements of section 201.8 of the Commission's rules (19 CFR 201.8).

FOR FURTHER INFORMATION CONTACT: Mr. Larry Reavis, investigator, 202-523-0296, or Mr. William Gearhart, advisory attorney, 202-523-0487.

INSPECTION OF PETITION: The petition filed in this case and the letters requested expedited consideration are available for public inspection at the Office of the Secretary, U.S. International Trade Commission, and at the New York City office of the U.S. International Trade Commission located at 6 World Trade Center.

SUPPLEMENTARY INFORMATION: The petition in the matter was filed by the International Union, United Automobile, Aerospace & Agricultural Implement Workers of America (UAW).

By order of the Commission.

Issued: July 21, 1980.

KENNETH R. MASON,
Secretary.

Investigation No. 337–TA–72

Certain Turning Machines and Components Thereof

Notice of Termination as to Certain Respondents

AGENCY: U.S. International Trade Commission.

ACTION: Having determined that this matter is properly before the Commission and having reviewed the record in this investigation, including the recommendation of the presiding officer and the motion to terminate (motion docket No. 72–40), and papers in support thereof, the Commission voted to terminate Tsugami Corp. and REM Sales Inc. as respondents in investigation No. 337–TA–72. The termination of the investigation as to these respondents does not terminate the investigation, as two other respondents, Yamazaki Corp. and Yamazaki Machinery Works, Ltd., remain.

EFFECTIVE DATE: July 21, 1980.

FOR FURTHER INFORMATION CONTACT: Simon H. Langer, 202–523–0143, or Robert Seto, 202–523–0418 of the Commission's staff.

SUPPLEMENTARY INFORMATION:

BACKGROUND

On September 13, 1979, Warner & Swasey Co. filed a complaint under section 337 of the Tariff Act of 1930, as amended (19 U.S.C. 1337). A notice of investigation was published in the Federal Register Of October 24, 1979 (44 F.R. 61271). That notice stated that an investigation was being instituted to determine:

> Whether there is a violation of subsection (a) of this section, in the unlawful importation of certain turning machines and components thereof into the United States or in their sale because such turning machines are allegedly covered by claims 1, 2, 3, 8, 10, 14, 18, 19, 20, and 22 of U.S. Letters Patent No. RE 29,612 and the components thereof allegedly contribute to and induce infringement of said claims, the effect or tendency of which is to substantially injure an industry, efficiently and economically operated in the United States.

Two parties, Yamazaki Machinery Works, Ltd. and Yamazaki Machinery Corp., were initially named as respondents to the investigation. On December 28, 1979, a notice was published in the Federal Register (44 F.R. 76869) adding as respondents Tsugami Corp., and REM Sales Inc.

Complainant Warner & Swasey moved on November 14, 1979, to amend the complaint and notice of investigation by adding as respondents Tsugami Corp., and REM Sales Inc., which motion was then certified to the Commission. On December 21, 1979, the motion to

amend the complaint and notice of investigation was granted by the Commission. Respondents Tsugami and REM moved on January 9, 1980, to extend their time for filing a response to the complaint which motion was granted and response due on March 27, 1980.

On March 27, 1980, respondents Tsugami and REM moved for an order to terminate the investigation as it applied to them on the grounds that respondents had entered into a licensing agreement with complainant, thereby disposing of any issues of alleged infringement of the reissue patent in suit. Complainant filed no opposition to respondents' motion. The Commission investigative attorney filed a memorandum in support of respondents motion to terminate.

On April 25, 1980, the presiding officer made a recommendation, which was certified to the Commission, to terminate the investigation as to respondents Tsugami and REM in accordance with 19 CFR, sections 210.51 and 210.53.

The Commission invited public comment on the license agreement, such notice being published in the Federal Register on June 11, 1980.

AUTHORITY

The applicable provision for motions to terminate an investigation is 19 CFR, section 210.51(a), which states in part that any party may move at any time for an order to terminate an investigation as to all issues in regard to one or more, but not all of the respondents. When a motion for termination is based upon a licensing agreement entered into between the parties, a copy of such license agreement shall be included with the motion. An order of termination shall constitute a recommended determination of the presiding officer under 19 CFR, section 210.53 when the presiding officer is not the Commission. Upon the receipt of a recommended determination and the record under section 210.53, the Commission shall review the same and determine, as the case may be, whether there is a violation of section 337 of the Tariff Act or whether there is reason to believe there is such a violation. Accordingly, the Commission hereby gives notice that it has terminated investigation No. 337–TA–72, as to respondents Tsugami Corp. and REM Sales Inc., by granting motion No. 72–40 of respondents to terminate the investigation as to them.

RECONSIDERATION

Any party wishing to petition for reconsideration of the Commission's action must do so within 14 days of service of the Commission order. Such petitions must be in accord with Commission rule 210.56 (19 CFR 210.56).

ADDITIONAL INFORMATION

Copies of the Commission's memorandum opinion and any other public documents in this investigation are available to the public

during official working hours (8:45 a.m. to 5:15 p.m.) in the Office of the Secretary, U.S. International Trade Commission, 701 E Street NW., Washington, D.C. 20436; 202-523-0161.

Notice of the institution of this investigation was published in the Federal Register of October 24, 1979 (44 F.R. 61271).

By order of the Commission.

Issued: July 23, 1980.

KENNETH R. MASON,
Secretary.

Investigation No. 731-TA-4 (Final)

COUNTERTOP MICROWAVE OVENS FROM JAPAN

AGENCY: U.S. International Trade Commission.

ACTION: Institution of a final antidumping duty investigation.

SUMMARY: As a result of the affirmative preliminary determination on July 10, 1980, by the U.S. Department of Commerce that there is a reasonable basis to believe or suspect that countertop microwave ovens from Japan are being, or are likely to be, sold in the United States at less than fair value within the meaning of section 733 of the Tariff Act of 1930 (19 U.S.C. 1673b), the U.S. International Trade Commission (hereinafter the Commission) hereby gives notice of the institution of investigation No. 731-TA-4 (final) to determine whether an industry in the United States is materially injured, or is threatened with material injury, or the establishment of an industry in the United States is materially retarded, by reason of imports of such merchandise. For purposes of this investigation, the term countertop microwave ovens means countertop microwave ovens classifiable under item 684.25 of the Tariff Schedules of the United States. This investigation will be conducted according to the provisions of part 207 of the Commission's Rules of Practice and Procedure (19 CFR 207, 44 F.R. 76457), subpart C, effective January 1, 1980.

EFFECTIVE DATE: July 10, 1980.

FOR FURTHER INFORMATION CONTACT: Mr. Robert Eninger, Senior Investigator, Office of Investigations, U.S. International Trade Commission, room 348, 701 E Street NW., Washington, D.C. 20436; 202-523-0312.

SUPPLEMENTARY INFORMATION: On February 14, 1980, the Commission unanimously determined, on the basis of the information developed during the course of investigation No. 731-TA-4 (preliminary), that there is a reasonable indication that an industry in the United States is materially injured by reason of the importation of

countertop microwave ovens from Japan, provided for in item 684.25 of the Tariff Schedules of the United States, which are allegedly sold at less than fair value. As a result of the Commission's determination, the Department of Commerce (the administering authority) continued its investigation into the question of less-than-fair-value sales.

On May 7, 1980, a notice of postponement of preliminary antidumping determination was published by the Department of Commerce in the Federal Register (45 F.R. 30100). The postponement was based on a determination that the case is extraordinarily complicated and extended the deadline for the preliminary determination by the Department of Commerce to July 9, 1980. The final determination by the Department of Commerce of whether countertop microwave ovens from Japan are being, or are likely to be, sold in the United States at less than fair value will be made within 75 days after the date of its preliminary determination, or in this case, by September 23, 1980.

WRITTEN SUBMISSIONS

Any person may submit to the Commission a written statement of information pertinent to the subject of this investigation. A signed original and 19 true copies of each submission must be filed at the Office of the Secretary, U.S. International Trade Commission Building, 701 E Street NW., Washington, D.C. 20436, on or before October 22, 1980. All written submissions, except for confidential business data, will be available for public inspection.

Any submission of business information for which confidential treatment is desired shall be submitted separately from other documents. The envelope and all pages of such submissions must be clearly labeled confidential business information. Confidential submissions and requests for confidential treatment must conform with the requirements of section 201.6 of the Commission's Rules of Practice and Procedure (19 CFR 201.6).

A staff report containing preliminary findings of fact will be available to all interested parties on September 24, 1980.

PUBLIC HEARING

The Commission will hold a public hearing in connection with this investigation on October 16, 1980, in the hearing room of the U.S. International Trade Commission Building, 701 E Street NW., Washington, D.C. 20436, beginning at 10 a.m., e.d.t. Requests to appear at the hearing should be filed in writing with the Secretary to the Commission not later than close of business (5:15 p.m., e.d.t.), October 9, 1980. All persons desiring to appear at the hearing and make oral presentations must file prehearing statements and should attend a prehearing conference to be held at 10 a.m., e.d.t., on October 7,

1980, in room 117 at the U.S. International Trade Commission Building. Prehearing statements must be filed on or before October 9, 1980. For further information concerning the conduct of the investigation, hearing procedures, and rules of general application, consult the Commission's Rules of Practice and Procedure, part 207, subpart C (19 CFR 207), and part 201, subparts A through E (19 CFR 201).

The Commission has waived Commission rule 201.12(d) as amended, submission of prepared statements in connection with this investigation. This rule stated that copies of witnesses' prepared statements should be filed with the Office of the Secretary of the Commission not later than 3 business days prior to the hearing and submission of such statements shall comply with sections 201.6 and 201.8 of this subpart. It is nevertheless the Commission's request that parties submit copies of witnesses' prepared testimony as early as practicable before the hearing in order to permit Commission review.

This notice is published pursuant to section 207.20 of the Commission's Rules of Practice and Procedure (19 CFR 207.20, 44 F.R. 76458).

By order of the Commission.

Issued: July 25, 1980.

KENNETH R. MASON,
Secretary.

In the Matter of	
CERTAIN AIRTIGHT CAST IRON STOVES	Investigation No. 337-TA-69

Notice of Commission Request for Comments Concerning Consent Order Agreement

AGENCY: U.S. International Trade Commission.

ACTION: Proposed consent order agreement—request for public comment.

SUMMARY: This proposed consent order agreement would result in termination of this investigation with respect White Mountain, Inc., a respondent before the Commission. This notice requests comments on the agreement. The agreement is available in the Office of the Secretary of the Commission.

DATES: Comments will be considered if received within 30 days of this notice. Comments should conform with Commission rule 201.8 (19 C.F.R. 201.8) and should be addressed to Kenneth R. Mason, Secretary, U.S. International Trade Commission, 701 E Street NW., Washington, D.C. 20436.

FOR FURTHER INFORMATION CONTACT: Jeffrey S. Neeley, Office of the General Counsel, U.S. International Trade Commission, 701 E Street NW., Washington, D.C. 20436; 202-523-0359.

SUPPLEMENTARY INFORMATION: In connection with the Commission's investigation under section 337 of the Tariff Act of 1930 (19 U.S.C. 1337), of alleged unfair methods of competition and unfair acts in the importation or sale of certain airtight cast iron stoves in the United States, complainants and the Commission investigative attorney moved on June 16, 1980, (motion No. 69-31) to terminate this investigation as to respondent White Mountain, Inc., based upon a consent order agreement. On June 27, 1980, the administrative law judge issued her recommendation (order No. 69-33) regarding the consent order agreement. The administrative law judge recommended that the Commission accept the agreement.

This investigation began with publication by the Commission of a notice in the Federal Register on July 12, 1979 (44 F.R. 40732), stating that an investigation was being instituted to determine:

> Whether, on the basis of allegations set forth and supplemented with additional information provided the U.S. International Trade Commission, there are violations of subsection (a) of this section in the unlawful importation of certain airtight cast-iron wood- and coal-burning stoves in the United States, or in their sale by reason that such stoves are—
>
> (a) Violating Jotul's common law trademarks because such stoves are visually identical copies of Jotul's stoves;
> (b) Being passed off as Jotul's products;
> (c) Violating Jotul's registered U.S. trademarks; and
> (d) Being falsely advertised.
>
> The effect or tendency of which is to destroy or substantially injure an industry, efficiently and economically operated in the United States or to restrain trade or commerce in the United States.

Twenty-five parties were named as respondents on July 12, 1979. By notice published in the Federal Register (44 F.R. 58816) on October 11, 1979, the Commission named 26 additional respondents. A subsequent notice dated October 24, 1979 (44 F.R. 61269), named one more respondent.

WRITTEN COMMENTS REQUESTED

In her recommendation of June 27, the administrative law judge stated that the type of agreement entered into should not be issued. However, she went on to add that similar consent order agreements had already been accepted by the Commission. The Commission wishes to point out that no consent order agreements have as yet been accepted by it in this case. At this time, the Commission has solicited public comment on whether it should accept the proposed orders, but

in no way has expressed an opinion as to whether they will ultimately be accepted. In considering the present consent order agreement, therefore, the Commission will, of course, consider the administrative law judge's recommendation with regard to the other consent order agreements.

Because the issues raised by the administrative law judge with regard to the other consent order agreements are clear, no oral argument will be held with respect to the administrative law judge's recommendation. However, in light of the Commission's duty to consider the public interest, the Commission requests written comments concerning the effect of the termination of this investigation based upon the consent order agreement upon (1) the public health and welfare; (2) competitive conditions in the U.S. economy; (3) the production of like or directly competitive articles in the United States; and (4) U.S. consumers. These written comments must be filed with the Secretary of the Commission no later than 30 days after publication of this notice in the Federal Register. A complete copy of the proposed consent order agreement is available in the Office of the Secretary of the Commission.

ADDITIONAL INFORMATION

The original and 19 true copies of all written submissions must be filed with the Secretary of the Commission. Any persons desiring to submit a document (or portion thereof) to the Commission in confidence must request in camera treatment. Such a request should be directed to the Secretary and must include a full statement of the reasons why the Commission should grant such treatment. The Commission will either accept such submission in confidence or return it. All nonconfidential written submissions will be open to public inspection at the Secretary's office.

By order of the Commission.

Issued: July 18, 1980.

KENNETH R. MASON,
Secretary.

Index

U.S. Customs Service

Treasury decisions:
Foreign currencies: T.D. No.
Daily certified rates—June 23–27, 1980 80–194
Rates which varied from quarterly rate—week of June 23–28, 1980 80–195
Daily certified rates—June 30–July 3, 1980 80–196
Certified quarterly rates—July 1–Sept. 30, 1980 80–197

Customs Court

Appeals to U.S. Court of Customs and Patent Appeals (p.—);
Appeal 80–33—Surge voltage protectors; electronic apparatus; electronic tubes; TSUS
Appeal 80–34—Power failure light flashlights; electrical articles; TSUS
Belgium; government financed regional development programs, C.D. 4863
Bounty or grant; countervailing duties, C.D. 4863
Cash payment grants; investment subsidies, C.D. 4863
Construction:
Code of Federal Regulations, title 19:
Sec. 159.47(a)(1975), C.D. 4863
Sec. 159.47(c)(1975), C.D. 4863
Customs Regulations, sec. 159.47(c), C.D. 4863
Economic Expansion Act of July 14, 1966 (Belgium), article 12, C.D. 4863
Economic Expansion Act of December 30, 1970 (Belgium):
Article 9, C.D. 4863
Article 15, sec. 1, C.D. 4863
Article 16, C.D. 4863
Public Law 96–6, 93 Stat. 10(1979), C.D. 4863
Public Law 96–39 (1979), C.D. 4863
Rules of U.S. Customs Court:
Rule 4.12, C.D. 4863
Rule 8.2, C.D. 4863
Tariff Act of 1930:
Sec. 303(a), as amended, C.D. 4863
Sec. 303(d), as amended, C.D. 4863
Trade Act of 1974:
Sec. 331(a), C.D. 4863
Sec. 321(f)(1), C.D. 4863
Trade Agreements Act of 1979, C.D. 4863

Construction—Continued
U.S. Code:
Title 19:
Sec. 1303, C.D. 4863
Sec. 1303(d), C.D. 4863
Sec. 1516, C.D. 4863
Sec. 1516(d), C.D. 4863
Title 28, sec. 1582(b), C.D. 4863
Countervailing duties; bounty or grant, C.D. 4863
Cross-motions for summary judgment, C.D. 4863
Duties, countervailing, C.D. 4863
Exemptions; real estate taxes, C.D. 4863
Float glass produced in Belgium, C.D. 4863
Government financed regional development programs; Belgium, C.D. 4863
Investment subsidies; cash payment grants, C.D. 4863
Loan, low-interest, C.D. 4863
Low-interest loans, C.D. 4863
Motion for summary judgment, C.D. 4863
Negative determination; Secretary of the Treasury's decision, C.D. 4863
Real estate taxes:
Exemptions, C.D. 4863
Exemptions from C.D. 4863
Secretary of the Treasury's decision; negative determination, C.D. 4863
Special accelerated depreciation rates, C.D. 4863
Summary judgment, cross-motions for, C.D. 4863

U.S. GOVERNMENT PRINTING OFFICE : 1980 O - 324-001

334-902 Item 950-D T 1.11/3:14/34
377
AUG 16 1980
contin

Customs Bulletin

Regulations, Rulings, Decisions, and Notices concerning Customs and related matters

and Decisions

of the United States Court of Customs and Patent Appeals and the United States Customs Court

328
9247
D.N.

Vol. 14 AUGUST 20, 1980 No. 34

pp 91

This issue contains

T.D. 80–198 through 80–204

C.D. 4864 and 4865

C.A.D. 1251

International Trade Commission Notice

THE DEPARTMENT OF THE TREASURY
U.S. Customs Service

NOTICE

The abstracts, rulings, and notices which are issued weekly by the U.S. Customs Service are subject to correction for typographical or other printing errors. Users may notify the U.S. Customs Service, Logistics Management Division, Washington, D.C. 20229, of any such errors in order that corrections may be made before the bound volumes are published.

For sale by the Superintendent of Documents, U.S. Government Printing Office, Washington, D.C. 20402. Price: $2.25 (single copy domestic); $2.85 (single copy foreign). Subscription price: $85.00 a year domestic; $106.25 a year foreign.

U.S. Customs Service

Treasury Decisions

(T.D. 80–198)

Cotton Textiles and Cotton Textile Products—Restriction on Entry

Restriction on entry of cotton textiles and cotton textile products manufactured or produced in Brazil

There is published below a directive of June 27, 1980, received by the Commissioner of Customs from the acting chairman, Committee for the Implementation of Textile Agreements, concerning visa requirements for cotton textiles and cotton textile products manufactured or produced in Brazil. This directive amends, but does not cancel, that committee's directive of June 29, 1972 (T.D. 72–200).

This directive was published in the Federal Register on July 3, 1980 (45 F.R. 45341), by the committee.

(QUO–2–1)

Dated: July 30, 1980.

WILLIAM D. SLYNE
(For Chester R. Krayton,
Director, Duty Assessment Division).

U.S. DEPARTMENT OF COMMERCE,
INTERNATIONAL TRADE ADMINISTRATION,
Washington, D.C., June 27, 1980.

Committee for the Implementation of Textile Agreements

COMMISSIONER OF CUSTOMS,
Department of the Treasury,
Washington, D.C.

DEAR MR. COMMISSIONER: This directive further amends, but does not cancel, the directive of June 29, 1972 from the chairman, Committee for the Implementation of Textile Agreements, that directed

you to prohibit, under certain specified conditions, entry into the United States for consumption and withdrawal from warehouse for consumption, of cotton textiles and cotton textile products, produced or manufactured in the Federative Republic of Brazil, for which that Government had not issued an appropriate export visa.

Under the terms of the Arrangement Regarding International Trade in Textiles done at Geneva on December 20, 1973, as extended on December 15, 1977; pursuant to the Bilateral Cotton Textile Agreement of April 22, 1976, as amended, between the Governments of the United States and the Federative Republic of Brazil; and in accordance with the provisions of Executive Order 11651 of March 3, 1972, as amended by Executive Order 11951 of January 6, 1977, the final sentence of the second paragraph of the June 29, 1972 letter is amended to read as follows: "A facsimile of the stamp is enclosed".

The actions taken with respect to the Government of the Federative Republic of Brazil and with respect to imports of cotton textiles and cotton textile products from Brazil have been determined by the Committee for the Implementation of Textile Agreements to involve foreign affairs functions of the United States. Therefore, the directions to the Commissioner of Customs, which are necessary for the implementation of such actions, fall within the foreign affairs exception to the rulemaking provisions of 5 U.S.C. 553. This letter will be published in the Federal Register.

Sincerely,

ARTHUR GAREL,
Acting Chairman, Committee for the Implementation of Textile Agreements.

(T.D. 80-199)

Wool and Manmade Fiber Textile Products—Restriction on Entry

Restriction on entry of wool and manmade fiber textile products manufactured or produced in Malaysia

There is published below a directive of July 22, 1980, received by the Commissioner of Customs from the chairman, Committee for the Implementation of Textile Agreements, concerning restriction on entry of wool and manmade fiber textile products in categories 446 and 604 manufactured or produced in Malaysia. This directive amends, but does not cancel, that committee's directive of December 11, 1979 (T.D. 80-52).

This directive was published in the Federal Register on July 23, 1980 (45 F.R. 49122), by the committee.

(QUO-2-1)

Dated: August 1, 1980.

WILLIAM D. SLYNE
(For Chester R. Krayton,
Director, Duty Assessment Division).

U.S. DEPARTMENT OF COMMERCE,
INTERNATIONAL TRADE ADMINISTRATION,
Washington, D.C., July 22, 1980.

Committee for the Implementation of Textile Agreements

COMMISSIONER OF CUSTOMS,
Department of the Treasury,
Washington, D.C.

DEAR MR. COMMISSIONER: This directive amends, but does not cancel, the directive issued to you on December 11, 1979, by the chairman, Committee for the Implementation of Textile Agreements, concerning imports into the United States of certain cotton, wool, and manmade fiber textile products, produced or manufactured in Malaysia.

Under the terms of the Arrangement Regarding International Trade in Textiles done at Geneva on December 20, 1973, as extended on December 15, 1977; pursuant to the Bilateral Cotton, Wool and Man-Made Fiber Textile Agreement of May 17 and June 8, as amended, between the Governments of the United States and Malaysia; and in accordance with the provisions of Executive Order 11651 of March 3, 1972, as amended by Executive Order 11951 of January 6, 1977, you are directed to prohibit, effective on July 24, 1980, and for the 12-month period beginning on January 1, 1980, and extending through December 31, 1980, entry into the United States for consumption and withdrawal from warehouse for consumption of wool and manmade fiber textile products in categories 446 and 604, produced or manufactured in Malaysia, in excess of the following adjusted levels of restraint:

Category	*Adjusted 12-month level of restraint*
446	15,793 dozen
604	804,878 pounds

The actions taken with respect to the Government of Malaysia and with respect to imports of wool and manmade fiber textile products

from Malaysia have been determined by the Committee for the Implementation of Textile Agreements to involve foreign affairs functions of the United States. Therefore, the directions to the Commissioner of Customs, which are necessary for the implementation of such actions, fall within the foreign affairs exception to the rulemaking provisions of 5 U.S.C. 553. This letter will be published in the Federal Register.

Sincerely,

PAUL T. O'DAY,
Chairman, Committee for the Implementation of Textile Agreements.

(T.D. 80-200)

Synopses of Drawback Decisions

The following are synopses of drawback rates issued February 15, 1978, to May 16, 1980, inclusive, pursuant to sections 22.1 through 22.5, inclusive, Customs Regulations

In the synopses below are listed for each drawback rate, approved under 19 U.S.C. 1313(b), the name of the company, the specified articles on which drawback is authorized, the merchandise which will be used to manufacture or produce these articles, the factories where the work will be accomplished, the date the statement was signed, the basis for determining payment, the Regional Commissioner to whom the rate was forwarded, and the date on which it was forwarded.

Dated: August 1, 1980.

ALFRED G. SCHOLLE,
Director,
Carriers, Drawback and Bonds Division.

(A) Company: Airco, Inc., Airco Carbon Division.
Articles: Graphite electrodes, graphite connecting pins (nipples).
Merchandise: Calcined needle petroleum coke.
Factories: St. Marys, Pa.; Niagara Falls, N.Y.
Statement signed: April 22, 1980.
Basis of claim: Appearing in.
Rate forwarded to Regional Commissioner of Customs: Baltimore, May 13, 1980.
Revokes: T.D. 80-62-A.

(B) Company: The American Fabrics Co.
Articles: 65 percent polyester, 35 percent cotton schiffli embroidered fabric (white or colored).

Merchandise: 65 percent polyester, 35 percent cotton schiffli embroidered greige fabric.
Factory: Bridgeport, Conn.
Statement signed: September 21, 1979.
Basis of claim: Appearing in.
Rate forwarded to Regional Commissioner of Customs: New York, May 14, 1980.

(C) Company: Apollo Technologies, Inc.
Articles: Boiler compounds—anticorrosive, inhibitors and additives.
Merchandise: Magnesium oxide.
Factories: Whippany, N.J.; Marshall, Tex.
Statement signed: September 10, 1979.
Basis of claim: Appearing in.
Rate forwarded to Regional Commissioner of Customs: New York, April 25, 1980.

(D) Company: Big Stone, Inc.
Articles: Canned orange juice and orange juice from concentrate.
Merchandise: Concentrated orange juice for manufacturing.
Factory: Ortonville, Minn.
Statement signed: January 18, 1980.
Basis of claim: Used in.
Rate forwarded to Regional Commissioners of Customs: Houston and Los Angeles, May 13, 1980.

(E) Company: Burlington Industries, Inc.
Articles: Bleached, dyed and/or mercerized piece goods.
Merchandise: Piece goods.
Factories: Cramerton, N.C.; Society Hill, S.C.
Statement signed: January 7, 1980.
Basis of claim: Used in, less valuable waste.
Rate forwarded to Regional Commissioner of Customs: New York, May 8, 1980.

(F) Company: E. I. du Pont de Nemours and Co.
Articles: Hydrogen peroxide, various grades.
Merchandise: 2-amyl-anthraquinone.
Factory: Memphis, Tenn.
Statement signed: April 30, 1980.
Basis of claim: Used in.
Rate forwarded to Regional Commissioner of Customs: Baltimore, May 9, 1980.
Revokes: T.D. 79-78-F.

(G) Company: The Empire Plow Co., Inc.
Articles: Agricultural implement replacement tillage tools and parts.
Merchandise: Hot rolled steel strip, sheet, plate, and bar.
Factory: Cleveland, Ohio.
Statement signed: December 19, 1979.
Basis of claim: Appearing in.
Rate forwarded to Regional Commissioner of Customs: New York, May 14, 1980.

(H) Company: Evans Cooperage Co., Inc.
Articles: Steel drums.
Merchandise: Rolled black carbon steel sheets.
Factory: Harvey, La.
Statement signed: March 31, 1980.
Basis of claim: Used in less valuable waste.
Rate forwarded to Regional Commissioner of Customs: New Orleans, May 14, 1980.
Revokes: T.D. 77-192-L.

(I) Company: Theresa Friedman & Sons, Inc.
Articles: Preserves and purees.
Merchandise: Extra fine hard refined sugar.
Factory: Philadelphia, Pa.
Statement signed: February 11, 1980.
Basis of claim: Used in.
Rate forwarded to Regional Commissioner of Customs: New York, May 14, 1980.

(J) Company: General Electric Co., Plastics Business Division.
Articles: Polycarbonate resin in powder, pellet, and sheet form.
Merchandise: Bisphenol-A and polycarbonate resin in powder form.
Factory: Mount Vernon, Ind.
Statement signed: April 3, 1980.
Basis of claim: Appearing in.
Rate forwarded to Regional Commissioner of Customs: New York, May 14, 1980.
Revokes: T.D. 77-76-J.

(K) Company: Georgia-Pacific Corp. (Resin Division).
Articles: Urea-formaldehyde and phenol-formaldehyde resins.
Merchandise: Methanol.
Factories: Various factories as listed in manufacturer's statement.
Statement signed: November 6, 1979.
Basis of claim: Used in.
Rate forwarded to Regional Commissioner of Customs: San Francisco, April 15, 1980.

(L) Company: Grain Terminal Association, Honeymead Products Co. Division.
Articles: Raw linseed oil; linseed meal.
Merchandise: Flaxseed.
Factory: Minneapolis, Minn.
Statement signed: May 6, 1980.
Basis of claim: Used in.
Rate forwarded to Regional Commissioner of Customs: Chicago, May 14, 1980.

(M) Company: Gulf Oil Corp.
Articles: Barban and Butam, herbicides.
Merchandise: Meta-chloroaniline; butynediol; thionyl chloride.
Factory: Jayhawk Works, South of Pittsburg, Kans.
Statement signed: January 11, 1980.
Basis of claim: Used in.
Rate forwarded to Regional Commissioner of Customs: Houston, April 29, 1980.
Revokes: T.D. 77-76-P.

(N) Company: Hardwicke Chemical Co.
Articles: N, N-diethyl-m-toluamide (DEET).
Merchandise: Meta-toluic acid (MTA).
Factory: Elgin, S.C.
Statement signed: February 5, 1980.
Basis of claim: Used in.
Rate forwarded to Regional Commissioner of Customs: Baltimore, May 7, 1980.

(O) Company: Eli Lilly and Co.
Articles: Tylan (tylosin phosphate); tylocine (tylosin); tylosin (tylosin phosphate), and tylosin tartrate.
Merchandise: Betaine anhydrous; tylosin phosphate concentrate.
Factories: Omaha, Nebr.; Clinton, Lafayette, and Indianapolis, Ind.
Statement signed: February 1, 1980.
Basis of claim: Appearing in.
Rate forwarded to Regional Commissioner of Customs: Chicago, May 16, 1980.
Revokes: T.D. 79-213-F.

(P) Company: Mack Trucks, Inc.
Articles: Trucks, tractors, truck-tractors, fire apparatus and finished automotive assemblies, subassemblies, components, and parts.
Merchandise: Automotive components, assemblies, subassemblies, and parts.

Factories: Allentown, Macungie, and New Cumberland, Pa.; Hayward, Calif.; Hagerstown, Md.
Statement signed: March 25, 1980.
Basis of claim: Appearing in.
Rate forwarded to Regional Commissioner of Customs: Baltimore, May 9, 1980.

(Q) Company: Merck & Co., Inc.
Articles: Tetramethyl ammonium hydroxide in methanol solution.
Merchandise: Methyl alcohol reagent.
Factory: Danville, Pa.
Statement signed: April 8, 1980.
Basis of claim: Used in.
Rate forwarded to Regional Commissioner of Customs: New York, April 15, 1980.

(R) Company: Midwesco, Inc. (Perma-Pipe Division)
Articles: Insulated carbon steel pipes, random 40-foot lengths with nominal outside diameters from 3 to 36 inches.
Merchandise: Carbon steel pipe, various outside diameters, random 40-foot lengths, having actual outside diameters of from 3.50 to 36 inches.
Factory: Lebanon, Tenn.
Statement signed: March 26, 1980.
Basis of claim: Appearing in.
Rate forwarded to Regional Commissioner of Customs: New Orleans, April 29, 1980.

(S) Company: Quality Kitchen Foods, Inc.
Articles: Frozen concentrated orange juice.
Merchandise: Concentrated orange juice for manufacturing.
Factory: North Haven, Conn.
Statement signed: March 18, 1980.
Basis of claim: Used in.
Rate forwarded to Regional Commissioner of Customs: New York, May 8, 1980.
Revokes: T.D. 78-397-Y.

(T) Company: Safeway Stores, Inc.
Articles: Still and/or carbonated beverages; preserves; powdered drink mixes; desserts.
Merchandise: Hard refined sugar; liquid refined sugar; liquid invert sugar.
Factories: Various factories as listed in manufacturer's statement.

Statement signed: November 27, 1979.
Basis of claim: Used in.
Rate forward to Regional Commissioner of Customs: San Francisco, April 24, 1980.

(U) Company: Teepak, Inc.
Articles: Finished fibrous artificial sausage casings
Merchandise: Semifinished artificial fibrous sausage casing rollstock.
Factories: Danville, Ill.; Atlanta, Ga.; Bethlehem, Pa.; N. Kansas City, Mo.; La Mirada, Calif.
Statement signed: April 24, 1980.
Basis of claim: Used in.
Rate forwarded to Regional Commissioner of Customs: Chicago, May 6, 1980.

(V) Company: Teledyne Industries, Inc. Teledyne Firth Sterling Division.
Articles: Blended tungsten grade powder; blended grade tungsten carbide power; tungsten ingots, bars, tablets, rods, wire, granules, rounds, electrodes, extrusions, and various other fabrications; tungsten carbide granules, tool bits, nibs, dies, shapes, forms and extrusions including armament projectiles and cores.
Merchandise: Tungsten concentrates; ferrotungsten and tungsten alloy steel ingots; ammonium paratungstate (APT); tungstic oxide; tungstic acid; tungsten metal powder; tungsten carbide powder (TCP).
Factories: McKeesport, West Elizabeth, and Greensburg, Pa.; Grant and Gurley, Ala.; LaVergne, Tenn.; Houston, Tex.; West Hartford, Conn.; Los Angeles, Calif.
Statement signed: June 1, 1979.
Basis of claim: Appearing in.
Rate forwarded to Regional Commissioner of Customs: New York, November 29, 1979.
Revokes: T.D. 47949–T, as amended by 50201–E, 51733–I, 52213–H, 53123–D, 53873–P, 69–160–U, and 80–94–T.

(W) Company: Texas Citrus Exchange.
Articles: Frozen concentrated orange juice and orange juice from concentrate.
Merchandise: Concentrated orange juice for manufacturing.
Factories: Mission and Harlingen, Tex.; Ortonville, Minn.; Paw Paw, Mich.
Statement signed: March 11, 1980
Basis of claim: Used in.

Rate forwarded to Regional Commissioners of Customs: Houston and Los Angeles, May 13, 1980.
Revokes: T.D. 78-397-W.

(X) Company: The Top Co.
Articles: Wool tops; Superwash shrink treated wool tops; and wool matchings.
Merchandise: Grease wool.
Factories: South Barre, Mass.; Minneapolis, Minn.
Statement signed: January 13, 1978.
Basis of claim: Used in, with distribution to the products obtained in accordance with their relative value at the time of separation.
Rate forwarded to Regional Commissioner of Customs: Boston, February 15, 1978.

(Y) Company: Universal Manufacturing Corp.
Articles: Ballasts and ballast components.
Merchandise: Electrical steel; cold rolled lamination steel: cold rolled carbon steel; and slit steel of the above types.
Factories: Paterson and Totowa, N.J.; Mendenhall and Vicksburg, Miss.; Blytheville, Ark.
Statement signed: February 4, 1980.
Basis of claim: Appearing in.
Rate forwarded to Regional Commissioner of Customs: New York, May 9, 1980.
Revokes: T.D. 79-213-Y.

(Z) Company: Virginia Chemicals, Inc.
Articles: Sodium Hydrosulfite F.
Merchandise: Sulfur dioxide.
Factories: Portsmouth, Va.; Carlisle, S.C.; Bucks, Ala.; Kalama, Wash.
Statement signed: January 8, 1980.
Basis of claim: Appearing in.
Rate forwarded to Regional Commissioner of Customs: Baltimore, May 13, 1980.

(T.D. 80-201)

Manmade Fiber Textile Products—Restriction on Entry

Restriction on entry of manmade fiber textile products manufactured or produced in Taiwan

There is published below a directive of June 30, 1980, received by the Commissioner of Customs from the acting chairman, Committee

for the Implementation of Textile Agreements, concerning restriction on entry of manmade fiber textile products in certain categories manufactured or produced in Taiwan. This directive amends, but does not cancel, that committee's directive of December 21, 1979 (T.D. 80-66).

This directive was published in the Federal Register on July 3, 1980 (45 F.R. 45340), by the committee.

(QUO-2-1)

Dated: August 1, 1980.

WILLIAM D. SLYNE
(For Chester R. Krayton,
Director, Duty Assessment Division).

U.S. DEPARTMENT OF COMMERCE,
INTERNATIONAL TRADE ADMINISTRATION,
Washington, D.C., June 30, 1980.

Committee for the Implementation of Textile Agreements

COMMISSIONER OF CUSTOMS,
Department of the Treasury,
Washington, D.C.

DEAR MR. COMMISSIONER: On December 21, 1979, the chairman, Committee for the Implementation of Textile Agreements, directed you to prohibit entry for consumption, or withdrawal from warehouse for consumption, of cotton, wool, and manmade fiber textile products in certain specified categories, produced or manufactured in Taiwan. The chairman further advised you that the levels of restraint are subject to adjustment.[1]

Under the terms of the Arrangement Regarding International Trade in Textiles done at Geneva on December 20, 1973, as extended on December 15, 1977; pursuant to the Bilateral Agreement of June 8, 1978, as amended, concerning cotton, wool and manmade fiber textile products exported from Taiwan; and in accordance with the provisions of Executive Order 11651 of May 3, 1972, as amended by Executive Order 11951 of January 6, 1977, you are directed, effective on July 8, 1980, and for the 12-month period beginning on January 1, 1980 and extending through December 31, 1980, to amend the directive of December 21, 1979, to include a level of restraint for category 645/646 and adjusted levels for the category 659 sublimits as follows:

[1] The term "adjustment" refers to those provisions of the Bilateral Cotton, Wool and Man-Made Fiber Textile Agreement of June 8, 1978, as amended, concerning cotton, wool, and manmade fiber textile products from Taiwan which provide, in part, that: (1) Within the aggregate and group limits, specific ceilings may be exceeded by designated percentages; (2) these same levels may be increased for carryforward; and (3) administrative arrangements or adjustments may be made to resolve minor problems arising in the implementation of the agreement.

324-902 O - 80 - 2

Category	*12-month level of restraint* [2]	
645/646	3,785,919	dozen
659 pt.[3]	2,888,500	pounds
659 pt.[4]	1,802,000	pounds of which not more than 238,500 pounds shall be in TSUSA Nos. 380.0429 and 380.8163 and not more than 1,696,000 pounds shall be in TSUSA Nos. 382.0449 and 382.7877.

In carrying out this directive entries of manmade fiber textile products in category 645/646, produced or manufactured in Taiwan, which have been exported to the United States prior to January 1, 1980, shall, to the extent of any unfilled balance, be charged against the level of restraint established for such goods during the 12-month period which began on January 1, 1979, and extended through December 31, 1979. In the event the level of restraint established for that period has been exhausted by previous entries, such goods shall be subject to the level set forth in this letter.

The actions taken with respect to Taiwan and with respect to imports of manmade fiber textile products from Taiwan have been determined by the Committee for the Implementation of Textile Agreements to involve foreign affairs functions of the United States. Therefore, the directions to the Commissioner of Customs which are necessary to the implementation of such actions, fall within the foreign affairs exception to the rulemaking provisions of 5 U.S.C. 553. This letter will be published in the Federal Register.

Sincerely,

ARTHUR GAREL,
Acting Chairman, Committee for the Implementation of Textile Agreements.

(T.D. 80–202)

Cotton, Wool, and Manmade Fiber Textile Products—Restriction on Entry

Restriction on entry of cotton, wool, and manmade fiber textile products manufactured or produced in Taiwan

There is published below a directive of June 10, 1980, received by the Commissioner of Customs from the chairman, Committee for the

[2] The levels of restraint have not been adjusted to account for any imports after Dec. 31, 1979.
[3] In category 659, only TSUSA Nos. 703.0500 and 703.1000.
[4] In category 659, only TSUSA Nos. 380.0429, 380.8163, 382.0449, and 382.7877.

Implementation of Textile Agreements, concerning restriction on entry of cotton, wool, and manmade fiber textile products in certain categories manufactured or produced in Taiwan. This directive amends, but does not cancel, that committee's directive of December 21, 1979 (T.D. 80-66).

This directive was published in the Federal Register on June 13, 1980 (45 F.R. 40199), by the committee.

(QUO-2-1)

Dated: August 1, 1980.

WILLIAM D. SLYNE
(For Chester R. Krayton,
Director, Duty Assessment Division).

U.S. DEPARTMENT OF COMMERCE,
INTERNATIONAL TRADE ADMINISTRATION,
Washington, D.C., June 10, 1980.

Committee for the Implementation of Textile Agreements

COMMISSIONER OF CUSTOMS,
Department of the Treasury,
Washington, D.C.

DEAR MR. COMMISSIONER: This directive amends, but does not cancel, the directive of December 21, 1979, from the chairman of the Committee for the Implementation of Textile Agreements which directed you to prohibit, effective on January 1, 1980, and for the 12-month period extending through December 31, 1980, entry into the United States for consumption, and withdrawal from warehouse for consumption of cotton, wool, and manmade fiber textile products in certain designated categories.

Under the terms of the Arrangement Regarding International Trade in Textiles done at Geneva on December 20, 1973, as extended on December 15, 1977; pursuant to the Bilateral Agreement of June 8, 1978, as amended, concerning cotton, wool, and manmade fiber textile products exported from Taiwan; and in accordance with the provisions of Executive Order 11651 of March 3, 1972, as amended by Executive Order 11951 of January 6, 1977, you are directed, effective on June 13, 1980, to cancel the import controls established in the directive of December 21, 1979, for categories 313, 342, 363, 442, 444, 469, 631, 643/644, 647, and 659, except for the category 659 sublimits.

The actions taken with respect to Taiwan and with respect to imports of cotton, wool, and manmade fiber textile products from

Taiwan have been determined by the Committee for the Implementation of Textile Agreements to involve foreign affairs functions of the United States. Therefore, the directions to the Commissioner of Customs, which are necessary to the implementation of such actions, fall within the foreign affairs exception to the rulemaking provisions of 5 U.S.C. 553. This letter will be published in the Federal Register.

Sincerely,

PAUL T. O'DAY,
Chairman, Committee for the Implementation of Textile Agreements.

(T.D. 80-203)

Manmade Fiber Textile Products—Restriction on Entry

Restriction on entry of manmade fiber textile products manufactured or produced in Thailand

There is published below a directive of May 6, 1980, received by the Commissioner of Customs from the chairman, Committee for the Implementation of Textile Agreements, concerning restriction on entry of manmade fiber textile products in category 604 manufactured or produced in Thailand. This directive amends, but does not cancel, that committee's directive of December 20, 1979 (T.D. 80-59).

This directive was published in the Federal Register on May 14, 1980 (45 F.R. 31772), by the committee.

(QUO-2-1)

Dated: August 4, 1980.

WILLIAM D. SLYNE
(For Richard R. Rosettie,
Acting Director, Duty Assessment Division).

U.S. DEPARTMENT OF COMMERCE,
INTERNATIONAL TRADE ADMINISTRATION,
Washington, D.C., May 6, 1980.

Committee for the Implementation of Textile Agreements

COMMISSIONER OF CUSTOMS,
Department of the Treasury,
Washington, D.C.

DEAR MR. COMMISSIONER: This directive amends, but does not cancel, the directive of December 20, 1979, from the chairman of the

Committee for the Implementation of Textile Agreements which directed you to prohibit entry during the 12-month period which began on January 1, 1980 and extends through December 31, 1980 of cotton and manmade fiber textile products in certain specified categories, produced or manufactured in Thailand, in excess of designated levels of restraint.

Under the terms of the Arrangement Regarding International Trade in Textiles done at Geneva on December 20, 1973, as extended on December 15, 1977; pursuant to the Bilateral Cotton, Wool and Man-Made Fiber Textile Agreement of October 4, 1978, as amended, between the Governments of the United States and Thailand; and in accordance with the provisions of Executive Order 11651 of March 3, 1972, as amended by Executive Order 11951 of January 6, 1977, you are directed to prohibit, effective on May 14, 1980, and for the 12-month period which began on January 1, 1980, and extends through December 31, 1980, entry into the United States for consumption and withdrawal from warehouse for consumption of manmade fiber textile products in category 604, produced or manufactured in Thailand, in excess of 487,805 pounds.[1]

Textile products in category 604 which have been exported to the United States prior to January 1, 1980 shall not be subject to this directive.

Textile products in category 604 which have been released from the custody of the U.S. Customs Service under the provisions of 19 U.S.C. 1448(b) or 1484(a)(1)(A) prior to the effective date of this directive shall not be denied entry under this directive.

The actions taken with respect to the Government of Thailand and with respect to imports of manmade fiber textile products from Thailand have been determined by the Committee for the Implementation of Textile Agreements to involve foreign affairs functions of the United States. Therefore, the directions to the Commissioner of Customs, which are necessary for the implementation of such actions, fall within the foreign affairs exception to the rulemaking provisions of 5 U.S.C. 553. This letter will be published in the Federal Register.

Sincerely,

PAUL T. O'DAY,
Chairman, Committee for the Implementation of Textile Agreements.

---

[1] The level of restraint has not been adjusted to account for any imports after Dec. 31, 1979. Imports during the January–February period of 1980 have amounted to 98,840 pounds.

(T.D. 80–204)

Synopses of Drawback Decisions

The following are synopses of drawback rates issued April 3, 1980, to May 23, 1980, inclusive, pursuant to sections 22.1 through 22.5, inclusive, Customs Regulations

In the synopses below are listed for each drawback rate approved under 19 U.S.C. 1313(a), the name of the company, the specified articles on which drawback is authorized, the merchandise which will be used to manufacture or produce these articles, the factories where the work will be accomplished, the date the statement was signed, the basis for determining payment, the Regional Commissioner who issued the rate, and the date on which it was signed.

(DRA-1-09)

Dated: August 4, 1980.

ALFRED G. SCHOLLE,
Director,
Carriers, Drawback and Bonds Division.

(A) Company: Ambow Corp.
Articles: Cut lace piece goods.
Merchandise: Imported dyed lace piece goods.
Factory: Hoboken, N.J.
Statement signed: March 6, 1980.
Basis of claim: Used in, less valuable waste.
Rate issued by Regional Commissioner of Customs: New York, April 17, 1980.

(B) Company: Applied Research Laboratories Division, Bausch & Lomb.
Articles: Quantometers.
Merchandise: Imported spectrometer kits.
Factory: Sunland, Calif.
Statement signed: March 24, 1980.
Basis of claim: Appearing in.
Rate issued by Regional Commissioner of Customs: Los Angeles, April 25, 1980.
Revokes: T.D. 54858–J.

(C) Company: Arapahoe Chemicals, Inc
Articles: 2-d-(6′Methoxy-2′naphthyl)-propionic acid salt of 1-deoxy-1-(octyl amino)-D-glucitol or NOG-1.

Merchandise: Imported N-n-Octylglucamine or 1-Deoxy-1-(n-octyamino)-D-glucitol or NOG.
Factory: Newport, Tenn.
Statement signed: April 1, 1980.
Basis of claim; Used in.
Rate issued by Regional Commissioner of Customs: Miami, April 10, 1980.

(D) Company: Julius Blum, Inc.
Articles: Assembled furniture fittings.
Merchandise: Imported plastic nylon housings and zinc cam screws.
Factory: Lincoln County (Lowesville), N.C.
Statement signed: March 24, 1980.
Basis of claim: Appearing in.
Rate issued by Regional Commissioner of Customs: Miami, April 10, 1980.

(E) Company: Carpenter Technology Corp., Special Products Division.
Articles: Seamless stainless steel cladding tube.
Merchandise: Imported stainless steel bars.
Factory: El Cajon, Calif.
Statement signed: April 16, 1980.
Basis of claim: Used in, less valuable waste.
Rate issued by Regional Commissioner of Customs: Los Angeles, May 2, 1980.

(F) Company: Coleman Engineering, Inc.
Articles: Portable generating and lighting equipment.
Merchandise: Imported diesel engines.
Factory: Memphis, Tenn.
Statement signed: May 15, 1980.
Basis of claim: Appearing in.
Rate issued by Regional Commissioner of Customs: New Orleans, May 23, 1980.

(G) Company: DMT Corp.
Articles: Complete generator sets.
Merchandise: Imported diesel internal combustion engine and parts thereof and electric generators.
Factories: New Berlin and Green Bay, Wis.
Statement signed: May 1, 1980.
Basis of claim: Appearing in.
Rate issued by Regional Commissioner of Customs: Chicago, May 19, 1980.

324-902 O - 80 - 3

(H) Company: Electronic Arrays, Inc.
Articles: Finished semiconductor devices, fully and partially fabricated semiconductor wafers.
Merchandise: Imported unfinished semiconductor subassemblies, 3″ Pl-0-0 and 3″ Nl-1-1 silicon wafers.
Factory: Mountain View, Calif.
Statement signed: June 4, 1979.
Basis of claim: Used in.
Rate issued by Regional Commissioner of Customs: San Francisco, May 23, 1980.
Revokes: T.D. 79–129–G.

(I) Company: Fashionaire, Inc.
Articles: Greige synthetic piece goods.
Merchandise: Imported synthetic yarns such as nylon, rayon and polyester, and blended synthetic yarns.
Factory: Naranjito, Puerto Rico.
Statement signed: January 24, 1980.
Basis of claim: Appearing in.
Rate issued by Regional Commissioner of Customs: New York, April 17, 1980.

(J) Company: Fenner America Ltd.
Articles: Conveyor belts.
Merchandise: Imported Sicron 701 emulsion PVC.
Factory: Middletown, Conn.
Statement signed: March 17, 1980.
Basis of claim: Appearing in.
Rate issued by Regional Commissioner of Customs: Boston, May 21, 1980.

(K) Company: The Glass-Lined Water Heater Co.
Articles: Kerosene burning water heaters.
Merchandise: Imported water heater storage tanks and control valves.
Factory: Cleveland, Ohio.
Statement signed: April 21, 1980.
Basis of claim: Used in.
Rate issued by Regional Commissioner of Customs: Chicago, May 9, 1980.

(L) Company: Gould-Brown Boveri.
Articles: Circuit breakers and components.
Merchandise: Imported capacitors, resistors, insulators, and fibre glass tubes.
Factory: Downey, Calif.

Statement signed: January 7, 1980.
Basis of claim: Used in.
Rate issued by Regional Commissioner of Customs: San Francisco, April 9, 1980.

(M) Company: Grove Manufacturing Co.
Articles: Hydraulic cranes.
Merchandise: Imported Cummins engines V-378, V-504, V-555, VT-225; Deutz engines; Gearmatic 44 winches; Michelin tires G-20X and R-20X; SKF bearings; Mannesman cylinder barrels; and Krueger safe load devices.
Factory: Shady Grove, Pa.
Statement signed: March 14, 1980.
Basis of claim: Used in.
Rate issued by Regional Commissioner of Customs: Baltimore, April 3, 1980.
Revokes: T.D. 78-379-K; T.D. 79-125-K; and T.D. 78-379-J as amended by T.D. 79-129-K.

(N) Company: Hartell Division, Milton Roy Co.
Articles: Controlled volume metering pumps.
Merchandise: Imported electric motors and pump parts.
Factory: Ivyland, Pa.
Statement signed: May 14, 1980.
Basis of claim: Used in.
Rate issued by Regional Commissioner of Customs: Baltimore, May 23, 1980.

(O) Company: Charles Jacquin et Cie, Inc.
Articles: Bottled Chambord liqueur (less than 100 percent proof).
Merchandise: Imported Chambord liqueur (more than 100 percent proof).
Factory: Philadelphia, Pa.
Statement signed: March 31, 1980.
Basis of claim: Used in.
Rate issued by Regional Commissioner of Customs: Baltimore, April 10, 1980.

(P) Company: Kasa Supply Corp.
Articles: Prefinished plywood door stock panels.
Merchandise: Imported hardwood plywood panels.
Factory: Elkhart, Ind.
Statement signed: March 7, 1977.
Basis of claim: Used in.

Rate issued by Regional Commissioner of Customs: San Francisco, May 23, 1980.
Revokes: T.D. 76–287–N, to cover successorship from Lam-I-Dor Industries, Inc.

(Q) Company: O'Neill, Inc.
Articles: Wetsuits.
Merchandise: Imported and/or drawback neoprene sponge rubber.
Factory: Santa Cruz, Calif.
Statement signed: March 27, 1980.
Basis of claim: Used in.
Rate issued by Regional Commissioner of Customs: San Francisco, April 9, 1980.

(R) Company: Pharmasol Corp.
Articles: Air fresheners.
Merchandise: Imported perfume oil.
Factory: Randolph, Mass.
Statement signed: May 14, 1980.
Basis of claim: Appearing in.
Rate issued by Regional Commissioner of Customs: Boston, May 21, 1980.

(S) Company: Power Packaging Corp.
Articles: Dry beverage powdered drink bases.
Merchandise: Drawback refined sugar.
Factory: Placentia, Calif.
Statement signed: February 11, 1980.
Basis of claim: Used in.
Rate issued by Regional Commissioner of Customs: Los Angeles, April 23, 1980.

(T) Company: Rollscreen Co.
Articles: Vinylwood folding doors and wood folding doors.
Merchandise: Imported white oak polyvinyl chloride with waekener film, Sapeli mahogany veneer and white oak veneer.
Factory: Pella, Iowa.
Statement signed: April 1, 1980.
Basis of claim: Appearing in.
Rate issued by Regional Commissioner of Customs: Chicago, May 16, 1980.

(U) Company: Rovar Soap Co.
Articles: Toilet soap.
Merchandise: Imported syndet base.

Factory: Hawthorne, Calif.
Statement signed: April 30, 1980.
Basis of claim: Used in.
Rate issued by Regional Commissioner of Customs: Los Angeles, May 19, 1980.

(V) Company: Rudd Manufacturing Co., Inc.
Articles: Men's and women's trousers and skirts.
Merchandise: Imported woolens, cottons, and silks.
Factory: Queens Village, N.Y.
Statement signed: March 24, 1980.
Basis of claim: Appearing in.
Rate issued by Regional Commissioner of Customs: New York. May 13, 1980.

(W) Company: Sandoz, Inc.
Articles: Parlodel tablets.
Merchandise: Imported 2-bromo-alpha-ergokryptin (bromocriptine mesylate).
Factory: East Hanover, N.J.
Statement signed: March 10, 1980.
Basis of claim: Appearing in.
Rate issued by Regional Commissioner of Customs: New York, April 30, 1980.

(X) Company: South Florida Diesel Corp.
Articles: Completed diesel engine packages such as marine propulsion engines, industrial power units, generator sets, and vehicle engines.
Merchandise: Imported Perkins base engines, Stamford generators, and Newage marine transmissions.
Factory: Miami, Fla.
Statement signed: April 17, 1980.
Basis of claim: Used in.
Rate issued by Regional Commissioner of Customs: Miami, April 29, 1980.

(Y) Company: Thomsen Equipment Co.
Articles: Concrete pumps.
Merchandise: Imported Deutz engines.
Factory: Gardena, Calif.
Statement signed: February 25, 1980.
Basis of claim: Appearing in.
Rate issued by Regional Commissioner of Customs: Los Angeles, April 25, 1980.

(Z) Company: Wacker Corp.
Articles: Construction equipment and finished parts and assemblies thereof.
Merchandise: Imported internal combustion engines and construction equipment component parts.
Factory: Hartford, Wis.
Statement signed: February 8, 1980.
Basis of claim: Appearing in.
Rate issued by Regional Commissioner of Customs: Chicago, April 11, 1980.
Revokes: T.D. 79-216-Y.

Decisions of the United States Customs Court

United States Customs Court

One Federal Plaza
New York, N.Y. 10007

Chief Judge

Edward D. Re

Judges

Paul O. Rao
Morgan Ford
Scovel Richardson
Frederick Landis
James L. Watson
Herbert N. Maletz
Bernard Newman
Mils A. Boe

Senior Judge

Samuel M. Rosenstein

Clerk

Joseph E. Lombardi

Customs Decisions

(C.D. 4864)

AMERICAN EXPORT LINES, INC., PLAINTIFF, *v.* UNITED STATES, DEFENDANT

Court No. 78-1-00174

Ship Repairs

Letters filed by plaintiff, containing a challenge to the liquidation of vessel repair duties, held to be a protest which was timely filed. Consequently, a Customs Service decision, denying the request for remission of duties, held to be the notice of denial of the protest within the pro-

visions of 28 U.S.C. 2631(a), and a summons, filed more than 180 days after that notice of denial, was untimely.

JURISDICTION—FOREIGN REPAIRS TO U.S. VESSEL

Plaintiff, the owner of a vessel documented under the laws of the United States to engage in foreign or coasting trade, seeks review in the Customs Court of the denial of remission of duties assessed on repairs made overseas to its vessel. Section 466, Tariff Act of 1930, as amended.

SECRETARY OF TREASURY—REMISSION OF DUTIES—EVIDENCE OF CASUALTY LOSS

If the owner of a vessel furnishes evidence that the vessel was compelled by stress of weather or casualty to make repairs to secure safety and seaworthiness of the vessel to reach her port of destination, the Secretary of the Treasury may remit or refund repair duties assessed. Section 466(b)(1), Tariff Act of 1930, as amended. *Suwannee Steamship Co.* v. *United States*, 354 F. Supp. 1361, 70 Cust. Ct. 327, C.R.D. 73-3 (1973).

PETITION FOR REMISSION OF DUTY—CUSTOMS REGULATIONS

Under the terms of section 4.14(h) of the Customs Regulations, the Customs officials may liquidate the vessel repair entry without giving notice regarding the application for remission, if plaintiff fails to provide substantiating documents required by the regulation.

JURISDICTION—LIQUIDATION—CHARACTER OF PROTEST

If a letter includes sufficient information to apprise the Customs officials that the plaintiff was challenging the liquidation of vessel repair duties, the letter will be considered as a protest. In Customs jurisprudence, there are no formal rules for the manner in which objections should be expressed.

JURISDICTION—SUMMONS—TIME OF FILING

28 U.S.C. 2631(a) requires a summons to be filed within 180 days from the date of mailing of notice of denial of a protest.

EQUITABLE ESTOPPEL—CUSTOMS CASES

The doctrine of equitable estoppel does not apply to Customs cases if plaintiff has not shown that Customs Service was instrumental in plaintiff's failure to meet statutory or regulatory requirements in the collection or refund of duties on imports. *Air-Sea Brokers, Inc.* v. *United States*, 596 F. 2d 1008, 66 CCPA —, C.A.D. 1222 (1979).

[Judgment for defendant.]

(Decided July 24, 1980)

Haight, Gardner, Poor & Havens (*M. E. DeOrchis, Brian D. Starer* and *Nicholas H. Cobb* on the briefs) for the plaintiff.

Alice Daniel, Assistant Attorney General; *Joseph I. Liebman*, Attorney in Charge, Field Office for Customs Litigation (*Madeline B. Kuflik* on the briefs), for the defendant.

RE, Chief Judge: In this action, plaintiff sues to recover duties assessed on repairs made overseas to its vessel, the *C.V. Lightning*. On

the ground that plaintiff failed to comply with procedural requirements, the defendant has moved to dismiss the action for lack of jurisdiction.

The repairs, for which plaintiff seeks a remission of duties, arose from an unexpected grounding suffered by the vessel as it was departing New York for Europe. Although the crew was able to release the ship in a matter of seconds, the ship's master nevertheless anchored for damage inspection. After inspection by both the ship's crew and an American Bureau of Shipping engineer, the *C.V. Lightning* was found to be seaworthy, and departed from New York.

After docking at Bremerhaven, West Germany, the vessel underwent another inspection for damage. As a result of this inspection, an American Bureau of Shipping surveyor in Bremerhaven declared the vessel unseaworthy, and required that repairs be made before he would authorize a return voyage.

After the repairs were made, the vessel returned to New York, and pursuant to section 466(a) of the Tariff Act of 1930, as amended, duties were assessed on the cost of the foreign repairs. This statute provides for a duty of 50 per centum to be assessed on the cost of repairs made in a foreign port on a vessel, documented under the laws of the United States, engaged or intended to engage in foreign or coasting trade. Section 466(b)(1) [1] also provides that if the owner of the vessel furnishes good and sufficient evidence that

> such vessel, while in the regular course of her voyage, was compelled, by stress of weather or other casualty, to * * * make such repairs, to secure the safety and seaworthiness of the vessel to enable her to reach her port of destination,

the Secretary of the Treasury may remit or refund the duties. *See Suwannee Steamship Co.* v. *United States*, 354 F. Supp. 1361, 70 Cust. Ct. 327, C.R.D. 73-3 (1973).

Plaintiff does not dispute the amount of the duties assessed, but contends that the casualty suffered by the *C. V. Lightning*, in running aground, falls within the remission provision of section 466(b)(1). Plaintiff asserts that no duties should have been assessed on the cost of the repairs, or, in any event, the duties exacted should be remitted or refunded.

Defendant denies that the grounding of the *C. V. Lightning* constituted a casualty within the regular course of the voyage. Hence, the defendant contends that plaintiff does not qualify for the remission of duties authorized by section 466(b)(1). Moreover, defendant maintains that, since plaintiff failed to comply with essential proce-

[1] This section was redesignated as sec. 466(d) under a 1978 amendment to the Tariff Act of 1930. Public Law 95-410, sec. 206(2).

dural requirements, it is not entitled to prosecute this action for remission of the foreign repair duties.

Specifically, defendant maintains that plaintiff failed to comply with two procedural requirements: (1) The regulatory mandate under 19 CFR 4.14 for filing log abstracts within 90 days after filing petition for remission of repair duties; and (2) the statutory requirement under 19 U.S.C. 1514 for filing a protest within 90 days after the posting of notice of liquidation.

Plaintiff, on the other hand, contends that (1) the Customs Service failed to comply with its own regulations by not sending plaintiff a denial of its remission petition; and (2) the proper time for initiating a protest for the remission of foreign repair duties is 90 days from denial of the remission petition.

Plaintiff argues that, even if the date of liquidation is held to be the date on which the 90-day period began to run, plaintiff's action was nonetheless filed timely through the letters it sent to Customs within 90 days after liquidation. Plaintiff also maintains that defendant should be estopped from raising any jurisdictional defenses arising from procedural defects, as defendant was instrumental in determining the procedures plaintiff should follow.

The procedure for seeking remission of duties on vessel repairs prior to liquidation is set forth in 19 CFR 4.14 of the Customs Regulations. Section 4.14 requires filing of Customs Form 3415: Declaration of Foreign Repairs to Vessels, upon entry, and filing of an application for remission of duties within 90 days from the date of entry. Evidence of the compelling nature of the repairs, including abstracts of the ship's log, must be filed within 90 days after the filing of the application. The regulation provides for the Customs officials to reach a determination on the application, and to notify the applicant of the determination.

Although various claims have been advanced, the crucial questions presented pertain to the necessary procedures to obtain a remission of duties, and whether the parties have complied with these procedures. It cannot be disputed that confusion existed for both parties as to the proper method to obtain administrative review of the decision to impose assessment of foreign repair duties.

There is a long chronological list of filings and responses between the parties in the attempt to gain remission of duties. After the *C.V. Lightning* returned to New York, plaintiff filed, on June 27, 1974, a vessel repair entry. On July 1, 1974, plaintiff submitted a letter addressed to the U.S. Customs Service at New York requesting that no duties be assessed on the ship's foreign repairs. Certain required documents were submitted with that letter, but no repair cost breakdown or log abstract was submitted at that time. On August 20, 1975,

plaintiff forwarded the final repair cost invoices. However, no log abstracts were ever submitted.

Plaintiff claims that it never received a response from Customs to its request for remission of the repair duties. Defendant maintains that plaintiff was sent a denial, but has not produced a file copy.

The entry was liquidated on October 24, 1975. Shortly after receipt of the bill, i.e., a statement of the amount of liquidated duties, on or about November 5, 1975, plaintiff wrote a letter to the Commissioner of Customs, Washington, D.C., requesting cancellation of the duties. On the following day, a copy of this letter was sent to the Customs officials in New York. Plaintiff attached a cover letter to the November 5 letter, asking that the New York office forward plaintiff's request to the Washington office.

Plaintiff received further bills from Customs for payment of the vessel repair duties, but received no reply to its November letters. On January 7, 1976, plaintiff again wrote to the Customs officials in Washington, D.C., for a response to the November letters. On February 5, 1976, Customs informed plaintiff that the November letters had never been received.

Plaintiff responded by sending another letter to Customs, repeating the information contained in the November 1975 letters, together with a request for the cancellation of the vessel repair duties. Customs denied this request in a letter dated January 14, 1977.

On April 7, 1977, plaintiff's attorneys wrote to Customs, supplying supplemental information on plaintiff's claim, and asked for reasons for the denial. By letter dated July 28, 1977, Customs reaffirmed its prior denial.

Plaintiff filed a formal protest against the Customs decision on September 27, 1977. On October 7, 1977, Customs again denied this protest, and on January 30, 1978, plaintiff filed a summons to commence this civil action. Whether or not this action was commenced within the jurisdictional requisite depends upon the legal effect of the documents filed.

On July 1, 1974, plaintiff filed a remission application but never filed the required log abstracts. Although defendant maintains that the Customs Service notified plaintiff of the denial of the petition, plaintiff contends that it never received the notification, and that Customs liquidated the entry without completing the procedures for the remission petition. Plaintiff submits that, to require it to file a formal protest within 90 days after liquidation, as urged by defendant, would result in plaintiff's initiating a second review procedure while a prior review procedure, i.e., the remission application, was still pending.

According to plaintiff, the proper time for filing a protest is 90 days after the final decision on its application for remission of the duties

rather than 90 days after liquidation. Under this interpretation, plaintiff contends that it would not be required to file a formal protest until after notification of the determination on the remission petition.

In support of its position, plaintiff cites 19 U.S.C. 1514(b)(2)[2] which reads in pertinent part:

> (2) A protest of a decision, order, or finding described in subsection (a) of this section shall be filed with such Customs officer within 90 days after but not before—
>
> (A) Notice of liquidation or reliquidation, or
>
> (B) In circumstances where subparagraph (A) is inapplicable, the date of the decision as to which protest is made.

Plaintiff submits that protests regarding repair remissions are governed by subparagraph (B). Under the circumstances presented, the court does not agree. Subsection (a) of section 1514 requires decisions of the Customs officer to be final and conclusive unless a protest is filed as provided in section 1514. Decisions specifically included are

> the legality of all orders and findings entering into the same, as to * * * (3) all charges or exactions of whatever character within the jurisdiction of the Secretary of the Treasury, [and] (5) the liquidation or reliquidation of an entry, or any modification thereof.

The provision for repair duty remission petitions under section 4.14 of the Customs Regulations does not create the circumstances in which liquidation is inapplicable, as required by subparagraph (B). The procedures provided for by section 4.14 were all designed to be completed prior to liquidation.

Section 4.14(e) of the regulations explicitly states in part:

> Inasmuch as an unprotested liquidation insofar as it relates to the classification of items under section 466(a) of the Tariff Act of 1930, as amended, is final at the expiration of 90 days, a subsequent application in regard to such classification cannot be considered in the absence of a timely protest.

Moreover, under section 4.14(h), if the applicant fails to file timely the required evidence, Customs may liquidate the entry without notifying the applicant of a determination of its remission petition. Thus, since plaintiff did not file the required log abstracts, two review procedures were not, as plaintiff suggests, pending simultaneously. Rather, by not complying with the regulation in filing the required log abstracts, plaintiff failed to qualify for a determination of its remission petition.

Section 4.14(h) of the Customs Regulations expressly provides that:

> (h) The evidence * * * shall be furnished to the District Director (of Customs) within 90 days after an application is

[2] This section was redesignated 19 U.S.C. 1514(c)(2) as of Jan. 1, 1980, with no change in language.

> filed. *If such evidence is not received within the 90-day period, the entry shall be liquidated without regard to the application* unless the District Director [of Customs] shall have approved an extension of such period. [*added.*]

Thus, since the plaintiff failed to complete its application, and no extension was approved, under the regulation Customs could liquidate the entry "without regard to the application."

The finality of duty assessment, i.e., the liquidation, was designed to eliminate confusion, and guarantee a final reckoning of an importer's liability for a specific entry. Thus, under 19 U.S.C. 1514 all objections to duty assessment must be raised by the filing of a protest within 90 days of liquidation. As previously noted, these include the legality as well as the correctness of a liquidation. *See United States* v. *A. N. Deringer, Inc.*, 593 F. 2d 1015, 66 CCPA —, C.A.D. 1220 (1979).

Plaintiff maintains that it properly commenced its action through the November letters that it mailed to Customs. Within 90 days after liquidation, plaintiff sent Customs two letters relating to the repair duties. It is plaintiff's contention that these letters constituted a valid, timely filed protest of the liquidation.

It is basic to Customs law that protests are not to be strictly construed. Quoting an earlier appellate case, the court in *Norwood Imports* v. *United States*, 48 Cust. Ct. 1, 3, C.D. 2306 (1961), explained:

> The statute requiring a protest on the part of importers was not designed for men learned in the law and trained to the niceties in pleading but for men engaged in commercial pursuits.

Numerous cases addressing the issue of what constitutes a sufficient protest have been reviewed at length in *Mattel, Inc.* v. *United States*, 377 F. Supp. 955, 72 Cust. Ct. 257, C.D. 4547 (1974). In *Mattel*, Judge Maletz described the standards for determining the sufficiency of a protest:

> While no formal rules have been devised for the manner in which such objections should be expressed, the court has held letters to be sufficient as protests where they conveyed to the Customs officials the objection in the mind of the protesting party so that the former would have an opportunity to review their decision and take action accordingly. *Id.* at 260.
>
> In short, the court, taking a liberal posture, has held that, however cryptic, inartistic, or poorly drawn a communication may be, it is sufficient as a protest for purposes of section 514 *if it conveys enough information to appraise knowledgeable officials of the importer's intent and the relief sought. Id.* at 262. [Italic added.]

See also *B. F. Pantoja* v. *United States*, 83 Cust. Ct. 170, C.R.D. 79-17 (1979), and *Labay International, Inc.* v. *United States*, 83 Cust. Ct. 152, C.D. 4834 (1979).

Although the November 5, 1975, letter may have omitted some of the niceties of a formal protest, it nonetheless conveyed sufficient information to apprise the Customs officials that the plaintiff was protesting the liquidation on October 24, 1975, of the vessel repair duties. The letter dated November 5, 1975, and sent to the Commissioner of Customs, made clear the plaintiff's objection in the following language:

> The purpose of this letter is to ask that *consideration be given toward the cancellation of the above mentioned duties* in view of the fact that the vessel would not be allowed to return to the United States unless repairs were carried out overseas. [Italic added.]

The letters in issue have been carefully examined to determine their meaning and effect. From the language used, there is no question that the plaintiff objected to the assessment of the repair duties. Judicial decisions teach that there are no formal rules for the manner in which objections should be expressed in a protest. *United States* v. *Sheldon & Co.*, *5* Ct. Cust. Appls. 427, 429, T.D. 34946 (1914), a germinal case, states the applicable principle of Customs law that:

> * * * a protest * * * must show fairly that the objection afterwards made at the trial was in the mind of the party at the time the protest was made and was brought to the knowledge of the collector to the end that he might ascertain the precise facts and have an opportunity to correct the mistake and cure the defect if it was one that could be obviated.

Plaintiff received repeated requests from Customs for payment of the repair duties but received no response to its letters. Finally, after much correspondence between the plaintiff and the Customs Service, and a repetition of plaintiff's objection, the plaintiff was notified on January 14, 1977, that its request for cancellation of duties had been denied. The Customs Service, in rendering a full administrative review, included an explanation of that negative decision, and stated that the casualty loss that gave rise to the repairs "took place before the voyage commenced." *See Suwannee Steamship Co.* v. *United States*, 435 F. Supp. 389, 390, 79 Cust. Ct. 19, 21, C.D. 4708 (1977).

The November 5, 1975, letter, which was a valid protest timely filed against the liquidation of October 24, 1975, was followed by the Customs Service's decision of January 14, 1977, denying the remission of the repair duties. This denial must be regarded as the notice of denial of that protest within the scope of 28 U.S.C. 2631(a). The letter of denial, dated January 14, 1977, admittedly received by the plaintiff, commenced the running of the 180-day statutory limit for the filing of a summons. The letter of Customs dated July 28, 1977, merely reaffirmed its prior denial and did not cause the 180-day statutory period to commence again.

As January 30, 1978, the date plaintiff filed its summons, is more

than 180 days after the date of the mailing of the Customs Service letter of January 14, 1977, this action must be dismissed because of untimeliness.

Plaintiff also maintains that the defendant should be estopped from asserting a timeliness defense. Plaintiff, however, has not shown that Customs was instrumental in plaintiff's failure to meet either the statutory or regulatory requirement. Plaintiff has presented no evidence that Customs refused tender of either the log abstracts or a sufficient protest.

It is clear that Customs, as well as plaintiff, is bound by the pertinent statute, and may not waive jurisdictional defects. Moreover, as recently noted by Judge Miller, writing for the Court of Customs and Patent Appeals:

> (E)quitable estoppel, even if available in cases involving the Government in its proprietary capacity, is not available against the Government in cases involving the collection or refund of duties on imports. *Air-Sea Brokers, Inc.* v. *United States*, 596 F. 2d 1008, 1011, 66 CCPA —, C.A.D. 1222 (1979).

Since the summons to contest the denial of the protest was not timely filed, the defendant's motion to dismiss is granted.

Judgment will be entered accordingly.

(C.D. 4865)

ELBE PRODUCTS CORP., PLAINTIFF, *v.* UNITED STATES, DEFENDANT

Court No. 78-1-00124

Imitation leather

I. By the provisions of headnote 1(vii) to part 4, subpart C of schedule 3, TSUS, the imported merchandise, consisting of a nonwoven fiber substrate and plastic coatings of polyurethane and polyvinyl chloride, used as shoe linings, is specially provided for in schedule 7 or elsewhere and, accordingly, excluded from classification under part 4, subpart C of schedule 3, TSUS.

II. The visual and tactile qualities of the plastic coatings which impart to the subject merchandise its ability to serve as imitation leather causes said merchandise to be almost wholly of * * * plastic within the meaning of the superior heading to item 771.42, TSUS, and, accordingly, properly classified under said item of the Tariff Schedules of the United States.

[Judgment for plaintiff.]

(Decided July 25, 1980)

Mandel & Grunfeld (*Steven P. Florsheim* at the trial and on the briefs; *Robert B. Silverman* on the briefs) for the plaintiff.

Alice Daniel, Assistant Attorney General; *Joseph I. Liebman*, Attorney in Charge, Field Office for Customs Litigation (*John J. Mahon* at the trial and on the brief), for the defendant.

BOE, Judge: The subject merchandise in the above-entitled action, described in the commercial invoices included in the official entry papers as "Forrita 80" and "Plantilla 80," was exported from Spain and entered at the port of New York in November 1976.

The articles in question were classified under item 355.25, TSUS, as modified by Presidential Proclamation 3822, 82 Stat. 1455, T.D. 68–9, providing:

	Webs, wadding, batting, and nonwoven fabrics, including felts and bonded fabrics, and articles not specially provided for of any one or combination of these products, all the foregoing, of textile materials, whether or not coated or filled:	
	* * * * * * *	
355.25	Of manmade fibers	12¢ per lb. + 15% ad val.

The defendant alternatively asserts that the merchandise in question is properly classified under item 359.50, TSUS, providing:

	Textile fabrics, including laminated fabrics, not specially provided for:	
	* * * * * * *	
359.50	Of manmade fibers	25¢ per lb. + 30% ad val.

In its presentation to this court the plaintiff urges as its primary claim that the subject merchandise be classified under item 771.42, TSUS, providing:

	Film, strips, sheets, plates, slabs, blocks, filaments, rods, seamless tubing, and other profile shapes, all the foregoing wholly or almost wholly of rubber or plastics:	
	Of cellulosic plastics materials:	
	* * * * * * *	
	Not of cellulosic plastics materials:	
* * *	Film, strips, and sheets, all the foregoing which are flexible:	
	Made in imitation of patent leather * * *	
771.42	Other	6% ad val.
	Of polyester	
	Of polyvinyl chloride	

Of polyethylene
Of polypropylene
Other:

In the alternative the plaintiff contends that the subject merchandise be classified under item 774.60, TSUS, providing:

Articles not specially provided for, of rubber of plastics:

* * * * * * *

774.60 Other ..... 8.5% ad val.

and in the further alternative under item 359.60, TSUS, providing:

Textile fabrics, including laminated fabrics, not specially provided for:

* * * * * * *

359.60 Other ..... 8.5 ad val.

It has been stipulated by the parties that "* * * the subject merchandise in its imported condition, consists of strips or sheets made or cut into rectangular pieces over 15 inches in width and over 18 inches in length." R. at 5. It is admitted by the pleadings that the merchandise in question is flexible and not of cellulosic plastics materials.

From the evidence submitted, which likewise appears to be undisputed, "Plantilla 80" and "Forrita 80" are manufactured principally for use as linings in footwear. The former is designed for use as a sock lining covering the inner sole of the shoe; the latter is designed for use as an inside lining of the upper shoe. The subject articles consist of nonwoven fibers and plastic coatings.

In the manufacture of the nonwoven fabric, dry, cut fibers are laid out in the form of a web on a conveyor belt, thereby permitting the fibers to be immersed in a bath of synthetic latex. In a subsequent drying process, the latex and the fibers are bound together into a thin substrate.[1] This fabric, processed as aforereferred to, is sold in rolls to the manufacturer of "Forrita 80" and "Plantilla 80" for use in the manufacture of the merchandise in question.

In the production of the subject merchandise a thin layer of liquid polyurethane paste is applied to a special siliconized paper. As the coated paper is heated and dried in an oven, the solvent contained in the paste evaporates, leaving a solid polyurethane remainder. A layer of liquid polyvinyl chloride (PVC) is spread upon the hardened polyurethane layer and again passed through an oven in order to effect a partial drying of the applied PVC. A layer of plastic adhesive is then spread upon the semirigid polyvinyl chloride, on which the nonwoven fabric is then placed. This layered arrangement, consisting of the paper, polyurethane, polyvinyl chloride, plastic adhesive, and the

[1] Illustration of the texture of the processed substrate is evidenced by plaintiff's exhibits 5A and 5B.

nonwoven fabric, is passed through an oven causing the polvyinyl chloride to be expanded and blown by the heating process. After cooling, the paper is released and to the surface of the plastic a lacquer is applied. When trimming and cutting are completed, the manufactured articles are in the form and constituency of the "Forrita 80" and "Plantilla 80", imported in rolls as the subject merchandise in the instant action.

The question presented for determination herein is illustrative of the imperspicuity encountered in the application of the provisions of schedule 3, TSUS, and the application of the provisions of schedule 7, TSUS, with respect to an article which may consist of materials in part provided for in each of said schedules. An examination of the Tariff Classification Study affords the opportunity to review the historical evolution of the present tariff schedules as they relate to the respective controverted classifications urged in the instant action. Clearly, there has been a failure to attain the clarity and specificity originally desired in their adoption.

Headnote 1(vii) to part 4, subpart C of schedule 3, TSUS, excludes from classification therein "other articles specially provided for in schedule 7 or elsewhere." Our inquiry in the present action, therefore, initially turns to a determination whether item 771.42, TSUS, as claimed by the plaintiff, serves to classify articles particularly characterized by the merchandise in question. An affirmative answer thereto precludes the classification of the merchandise under item 355.25, TSUS, as determined by the Customs Service or under the alternative classifications, items 359.50 or 359.60, TSUS, as urged respectively by the defendant and the plaintiff. *United States* v. *Canadian Vinyl Industries, Inc.*, 64 CCPA 97, C.A.D. 1189, 555 F. 2d 806 (1977).

The superior heading to 771.42, TSUS, requires that merchandise classified thereunder be "wholly or almost wholly of * * * plastics." As defined by general headnote 9(f)(iii), TSUS, "'almost wholly of' means that the essential character of the article is imparted by the named material, notwithstanding the fact that significant quantities of some other material or materials may be present."

From the evidence adduced at the trial of the within action, the court can only conclude that the essential character of the subject merchandise is imparted by the plastic coatings, notwithstanding the presence therein of nonwoven fibers. It is undisputed that in serving as linings in footwear, only the plastic surfaces of "Forrita 80" and "Plantilla 80" are exposed. The nonwoven backing provides a substrate permitting the permanent attachment of the subject merchandise within the shoe. It is significant that all witnesses, in behalf of the plaintiff as well as the defendant, agree that the foremost characteristic which an imitation leather product, such as "Forrita 80" and

"Plantilla 80", must possess is an appearance simulating genuine leather. Without exception, it is acknowledged that such a characteristic is exhibited in the subject merchandise and imparted thereto solely by the plastic coatings.

The evidence further discloses that the subject merchandise possesses other qualities singularly characteristic of leather products. The plastic coatings applied to "Forrita 80" and "Plantilla 80" in the manufacturing process provide a soft feel, closely resembling the feel of leather. The smooth surface of the plastic coatings provides a resistance to abrasions, thereby protecting the inner shoe linings from wear as a result of the constant contact with the foot. From the testimony of plaintiff's witnesses it appears that because of the particular interest of customers, within the commercial shoe industry, in obtaining merchandise possessing the aforedescribed simulated qualities and characteristics of leather, little or no attention is given by these customers to the fabric substrate.

In its effort to demonstrate that the essential character of the subject merchandise is not imparted by the plastic coatings, the defendant offered evidence relating to certain qualities therein allegedly provided by the presence of the nonwoven fibers. Although it appears to be without dispute that the nonwoven fibers may contribute to additional characteristics possessed by "Forrita 80" and "Plantilla 80," such as tear-resistance, stretchability and burst-strength, the court does not find from the testimony that the presence of the nonwoven fibers or their contribution to such additional characteristics possessed by the subject merchandise serves to alter the essential character thereof. On the contrary, defendant's witnesses concede that the nonwoven fiber, alone and without the plastic latex binder applied thereto, possesses little strength and would, in fact, fall apart if it were to be picked up or handled. Only the combination of the plastic coatings, the nonwoven fibers and the plastic latex binder applied to such fibers provide the tear-resistance and stretch characteristics which the defendant seeks to attribute to the nonwoven fiber.

Viewing all of the evidence in its entirety, this court concludes that it is the visual and tactile qualities of the plastic coatings which impart to the subject merchandise its ability to serve as an imitation leather. Notwithstanding any qualities as to the durability and strength of the subject merchandise to which the nonwoven fibers may contribute, the essential character thereof is imparted by the plastic coatings and, accordingly, the merchandise is "almost wholly of * * * plastic" within the meaning of the superior heading to item 771.42, TSUS.

The defendant urges that the subject merchandise cannot be excluded from classification under part 4, subpart C of schedule 3, by virtue of headnote 1(vii) thereof, contending that the imported mer-

chandise is not an article within the meaning of the exclusionary provisions of the headnote. In support of this contention, the defendant refers to headnote 5 in schedule 3, in which it is stated that an article consisting either in whole or in part of fabric which is coated with plastic "shall be regarded not as a textile material but as being wholly of rubber or plastics to the extent that (as used in the article) the nontransparent rubber or plastics forms either the outer surface of such article or the only exposed surface of such fabric." Citing the legislative history contained in the House report to the Tariff Schedules Technical Amendments Act of 1965, the defendant contends that headnote 5 to schedule 3, accordingly, relates solely to finished articles of the character specified in the legislative history, i.e., rainwear, hunting jackets, footwear, headwear, gloves, luggage, handbags and furniture.[2] A fortiori, the defendant argues that intermediate products, consisting of nonwoven fiber and plastic coatings, used in the finished article, therefore, are precluded by the language of headnote 5 to schedule 3 from classification as articles not specially provided for under schedule 7.

In what appears to be a full answer to defendant's contention, our appellate court has held that rolls of nylon fabric coated with a glossy polyurethane skin are articles within the meaning of headnote 1(vii) to part 4, subpart C of schedule 3 and, accordingly, properly classified under item 771.40, TSUS, as strips or sheets in imitation of patent leather. *United States* v. *Canadian Vinyl Industries, Inc.*, *supra*.

The real thrust of defendant's argument in the instant action, however, is that the majority opinion in the *Canadian Vinyl* decision is in error and that the reasoning of our appellate court in that decision should not apply herein. This court cannot agree.

Pursuant to the Customs Simplification Act of 1954, the Tariff Commission was directed—

> "to make a comprehensive study of the laws prescribing the tariff status of imported *articles*" and to "(e)stablish schedules of tariff classifications which will be logical in arrangement and terminology and adapted to the changes which have occurred since 1930 in the character and importance of *articles* produced in and imported into the United States and in the markets in which they are sold." Tariff Classification Study Submitting Report (Nov. 15, 1960) at 1. [Italic supplied.]

It is clear from the foregoing that in the drafting of the Tariff Schedules of the United States, a broad meaning was intended to be given to the term articles. The definition of that term should not be narrowed unless the context, scope, or purpose of the applicable provisions should require otherwise. *D. N. & E. Walter & Co.* v. *United States*,

[2] H. Rep. No. 342, 89th Cong., 1st Sess., 10-11 (1965).

44 CCPA 144, 147–48, C.A.D. 652 (1957). The enumeration of specific types of finished articles referred to in the legislative history relating to headnote 5 to schedule 3, and upon which the defendant in part bases its restricted construction of the term "article," does not preclude the use of that term in a broader connotation under other applicable tariff schedules. In the within action we are not concerned whether the imported merchandise is an intermediate product of a finished article, as urged by the defendant, but rather whether the merchandise in question is an article specially provided for in schedule 7.[3]

Contrary to the restricted and narrow meaning of the term "articles" attributed by the defendant to the classification of the imported merchandise, it appears to have been specifically intended in the drafting of the Tariff Schedules of the United States to include under items 771.40 and 771.42, TSUS, thereof, plastic articles in imitation of leather in the very form and character as evidenced by the merchandise in question. The Tariff Classification Study, schedule 7, at 451, provides an insight with respect to the historical classification of such articles in the Tariff Act of 1930 as well as the intended purpose and purview of item 771.42, under present tariff schedules:

> "There have been significant imports of polyvinyl chloride film and sheets in imitation of *patent leather* and *fancy leather* which have been dutiable, by virtue of the similitude provision in paragraph 1559, at the rates applicable to such leathers in paragraph 1530. These rates are used for *such plastics materials* in items 771.40 and 771.42." [Italic supplied.]

This court, therefore, concludes that the merchandise in question as imported has been specially provided for in schedule 7 within the meaning and intent of headnote 1(vii) to part 4, subpart C of schedule 3. The more specific classification of the merchandise in issue provided for in item 771.42, TSUS, prevails over the basket provision at item 774.60, TSUS, alternatively claimed by the plaintiff. See *Travenol Laboratories, Inc.* v. *United States*, 67 CCPA ——, C.A.D. 1247 (1980).

Accordingly, the court finds that the Customs Service's classification of the merchandise in issue under item 355.25, TSUS, is in error and that the claimed classification by the plaintiff with respect to the subject merchandise under item 771.42, TSUS, is correct and proper and must be affirmed.

Let judgment be entered accordingly.

---

[3] In a prior decision, *Marshall & Co.* v. *United States*, 67 Cust. Ct. 316, C.D. 4291, 334 F. Supp. 643 (1971)t this court's opinion predicated its decision in part upon the distinction between an intermediate produco and the final article. Though this distinction may be significant in some contexts, this court is unable tn agree with its application in the *Marshall* decision or in the case at bar. Congnizance was not taken thereir of headnote 1(vii), part 4, subpart C, schedule 3, TSUS—the determinative factor in reaching the prope, classification of the merchandise in question.

Decisions of the United States Court of Customs and Patent Appeals

(C.A.D. 1251)

THE UNITED STATES *v.* SEAGULL MARINE, No. 79–40

1. DUTIABILITY OF LIFERAFTS

Judgement of the Customs Court sustaining claim that inflatable rubber liferafts are vessels within the meaning of 1 U.S.C. 3, general headnote 5(e), and subpart D headnote 1(ii) (TSUS) and as such are intangibles and not dutiable under the Tariff Act of 1930 is reversed.

2. DEFINITION OF "VESSEL"

The term "vessel," when used in subpart D and in general headnote 5(e) of the Tariff Act, is defined by 1 U.S.C. 3.

3. DECISION NOT BINDING

A prior decision of the Customs Court is not binding upon the Court of Customs and Patent Appeals.

4. DEFINITION OF "VESSEL"

The definition of "vessel" for tariff purposes has been narrowed to limit duty-free treatment to watercraft that are instrumentalities of commerce as opposed to articles of commerce.

5. INTERPRETATION—TSUS

Articles excluded by general headnote 5(e) are those excluded from subpart D headnote 1(ii); therefore, the phrase "vessels which are not yachts or pleasure boats" in headnotes 5(e) and 1(ii) must be given the same scope of interpretation.

6. LIFEBOATS—DUTY-FREE STATUS

Congress specifically directed in item 853.10 that lifeboats are to be afforded duty-free status when imported for use by institutions established to encourage the saving of human life which evidences no congressional intent to exempt all lifeboats, including liferafts, from duty.

7. CLASSIFICATION—LIFERAFTS

Subject liferafts are not vessels within the meaning of general headnote 5(e), do not meet the provisions of item 853.10, are specifically provided for in item 696.35 as pneumatic craft, as such, subject liferafts are dutiable as pneumatic craft in item 696.35.

U.S. Court of Customs and Patent Appeals, July 31, 1980

Appeal from U.S. Customs Court, C.D. 4814

[Reversed.]

Alice Daniel, Assistant Attorney General, *David M. Cohn*, Director, *Joseph I. Liebman*, Attorney in Charge, Field Office for Customs Section, *Susan C. Cassell*, Commercial Litigation Branch.

Edward N. Glad, attorney for appellee.

[Oral argument on May 5, 1980, by Susan C. Cassell for appellant, Edward N. Glad, for appellee.]

Before: MARKEY, *Chief Judge*, RICH, BALDWIN, and MILLER *Associate Judges*, and WINNER,* *Chief Judge*, U.S. District Court of Colorado.

BALDWIN, Judge.

[1] This is an appeal from the judgement of the U.S. Customs Court, 83 Cust. Ct. ——, C.D. 4814, 475 F. Supp. 158 (1979), sustaining appellee's claim that the goods in issue, inflatable rubber liferafts, are vessels and as such are intangibles and not dutiable under the Tariff Act of 1930. We reverse.

THE IMPORTED MERCHANDISE

The merchandise in this action consists of inflatable rubber liferafts exported from Wales and entered in California in early 1977. These liferafts have a carrying capacity of from 4 to 16 persons, are made of rubber covered fabric with sides consisting of two inflatable tubes with inflatable arches which support a double-wall canopy having an opening at one end, and are inflated by means of a carbon dioxide cylinder. The liferafts are imported in a deflated condition packed in low profile canisters or valises and come equipped with various survival gear, e.g., sea anchors, first aid kits, seasickness tablets, flashlights, etc. The parties concede that the merchandise in issue is, in all material respects, the same as that in *Thornley & Pitt* v. *United States*, 48 Cust. Ct. 134, C.D. 2325 (1962), which appellee avers is stare decisis of the issue here.

STATUTORY PROVISIONS

The merchandise was initially classified by the U.S. Customs Service under item 696.05 of the Tariff Schedules of the United States (TSUS) as a yacht or pleasure boat. In the court below, the Government conceded that such classification was erroneous and contended that the

*The Honorable Fred M. Winner, U.S. District Court for the District of Colorado, sitting by designation.

merchandise should be classifiable under item 696.35, as pheumatic craft, at the duty rate of 6 percent ad valorem. The court agreed with appellee that the liferafts are vessels and, consequently, are not dutiable.

The pertinent TSUS subpart is:

Subpart D.—Pleasure Boats; Floating Structures

Subpart D headnote:

1. This subpart does not cover—

* * * * * * *

(ii) vessels which are not yachts or pleasure boats (see general headnote 5(e)). Yachts or pleasure boats, regardless of length or tonnage, whether motor, sail, or steam propelled, owned by a resident of the United States or brought into the United States for sale or charter to a resident thereof, whether or not such yachts or boats are brought into the United States under their own power; and parts thereof:

	Yachts or pleasure boats:	
696.05	Valued not over $15,000 each	2% ad val.
696.10	Valued over $15,000 each	6% ad val.
696.15	Parts	7% ad val.
	Canoes, racing shells, pneumatic craft, and pleasure boats not specially provided for which are not of a type designed to be chiefly used with motors or sails; and parts of the foregoing:	
696.30	Canoes and canoe paddles, of wood or bark	
696.35	Pneumatic craft	5% ad val.
696.40	Other	6% ad val.
		12% ad val.

General headnote 5(e) mentioned in the subpart D headnote provides:

5. Intangibles—For the purposes of headnote 1—[1]

* * * * * * *

(e) vessels which are not yachts or pleasure boats within the purview of subpart D, part 6, or schedule 6 are not articles subject to the provisions of these schedules.

[2] The term "vessel," when used in subpart D and in general headnote 5(e) of the Tariff Act, is defined by 1 U.S.C. 3 as including every description of watercraft or other artificial contrivance used, or capable of being used, as a means of transportation on water.

[1] General headnote 1 provides that all articles imported into the United States are subject to duty unless excepted under another general headnote.

CUSTOMS COURT

After receiving appellee's motion for summary judgment and the Government's cross-motion for summary judgment, the Customs Court held that *Thornley & Pitt* v. *United States*,[2] supra, was stare decisis of the issue and granted appellee's motion for summary judgment. The court rejected the Government's contention that the decision in *Thornley & Pitt* was clearly erroneous and in direct contradiction of precedent thus making the doctrine of stare decisis inapplicable.

The liferafts were seen to be specially provided for under the vessels provision of general headnote 5(e) and hence nondutiable. The Government's argument that *United States* v. *Bethlehem Steel Co.*, 53 CCPA 142, C.A.D. 891 (1966) modified the statutory definition of vessels by requiring that they be used in a commercial or maritime service was not considered persuasive. *Bethlehem Steel* was seen as going no further than saying that watercraft designed and intended for purposes other than transportation do not come within the meaning of the term "vessel." The vessel part or midsection involved in *Bethlehem Steel* was designed for use in construction rather than in maritime service. *Bethlehem Steel* was, therefore irrelevant to the questions in *Thornley & Pitt* and the case at hand.

Additionally, the court concluded that, contrary to the Government's contention, the provision in item 696.35 for pneumatic craft was not evidence that the legislature desired to change the status of liferafts, that item being only a redistribution in the TSUS of articles previously classified under paragraph 1537(b) of the Tariff Act of 1930 and was not a substantive change.

OPINION

The issue is whether the imported merchandise, i.e., inflatable liferafts, is a vessel within the meaning of 1 U.S.C. 3, general headnote 5(e), and subpart D headnote 1(ii), TSUS, and entitled to duty-free status or whether the merchandise is dutiable under item 696.35 as pneumatic craft.

As to the law announced in *Thornley & Pitt*, it is not stare decisis here. **[3]** A prior decision of the Customs Court is not binding upon this court. *Lafayette Radio Electronics Corp.* v. *United States*, 57 CCPA 62, C.A.D. 977, 421 F. 2d 751 (1970). Thus, we are free to come to an independent conclusion in this matter.

[4] As seen in 1 U.S.C. 3, supra, the definition of the term "vessel" is quite broad. However, judicial precedent has limited the definition of vessel for tariff purposes and has established that not every water-

[2] There the Customs Court held that inflatable liferafts, imported as cargo, were vessels within the definition of that term as codified in 1 U.S.C. 3 and exempt from duty under the Tariff Act of 1930.

craft meeting the bare terms of the definition is entitled to entry into the United States duty free. In particular, the scope of the term "vessel" has been narrowed to limit duty-free treatment to watercraft that are instrumentalities of commerce as opposed to articles of commerce. See *The Conquerer*, 166 U.S. 110 (1897); *United States* v. *Bethlehem Steel Co.*, supra; *Hitner Sons Co.* v. *United States*, 13 Ct. Cust. App. 216, T.D. 41175 (1922); and *Thayer* v. *United States*, 2 Ct. Cust. App. 526, T.D. 32252 (1912).

In comparing the subject merchandise with the criteria set forth in *The Conquerer* and its progeny, supra, we see that the appellee's liferafts cannot be considered vessels within the meaning of general headnote 5(e). The subject liferafts are undocumented, incapable of use as commercial transportation, and do not serve as vehicles for importation of other merchandise. The merchandise is carried as equipment on yachts, pleasure boats, and the like. Therefore, the liferafts are articles of commerce rather than instrumentalities of commerce and as such are not vessels under general headnote 5(e).

[5] Articles excluded by general headnote 5(e) are those excluded from subpart D headnote 1(ii); therefore, the term "vessels which are not yachts or pleasure boats" in headnotes 5(e) and 1(ii) must be given the same scope of interpretation. If, in construing general headnote 5(e), the term "vessels" is broadly interpreted to include the subject liferafts, then headnote 1(ii) must be so construed or the intended interrelationship between general headnote 5(e) and subpart D headnote 1(ii) would be destroyed. But if headnote 1(ii) is given the broad construction of headnote 5(e), i.e., to include the subject liferafts in the definition of vessels, then subpart D would be rendered internally inconsistent. "Canoes, racing shells (and) pneumatic craft" expressly provided for in subpart D separately from "yachts or pleasure boats," would be excluded from subpart D by headnote 1(ii) as "vessels which are not yachts or pleasure boats."

Applying *The Conquerer* and its progeny construction to general headnote 5(e) as discussed above avoids the intolerable result of subpart D headnote 1(ii) being internally inconsistent. *The Conquerer* construction excludes canoes, racing shells and pneumatic craft from the duty-free status of headnote 5(e) thus allowing those articles to be properly classified under items 696.30–696.40 where they are specially provided for.

[6] Additionally, it must be noted that Congress has specifically directed in item 853.10 that lifeboats and lifesaving equipment are to be afforded duty-free status when imported for use by institutions established to encourage the saving of human life. By such congressional action, it is evident that Congress did not intend to exempt all lifeboats, including liferafts, from duty.

[7] Since the subject liferafts are not vessels within the meaning of general headnote 5(e), since they do not meet the provisions of item 853.10, and since they are specifically provided for in item 696.35 as pneumatic craft, the Customs Court improperly held the subject liferafts to be nondutiable vessels. The subject liferafts are dutiable as pneumatic craft in item 696.35. Accordingly, we *reverse*.

Winner, C.J., *dissents*.

Appeal to U.S. Court of Customs and Patent Appeals

APPEAL 80–35.—Siemens America, Inc. *v.* United States.—SURGE VOLTAGE PROTECTORS—ELECTRICAL APPARATUS—ELECTRONIC TUBES—TSUS. Cross-appeal from C.D. 4856. Appeal 80–33, reported in Customs Bulletin of August 13, 1980 (vol. 14, No. 33), was filed by the Government.

In this case certain gas tube surge voltage protectors were assessed with duty at the rate of 14, 12, 10, or 8.5 percent ad valorem, depending upon the year of entry, under the provision in item 685.90, Tariff Schedules of the United States, as modified by T.D. 68–9, for other electrical apparatus for the protection of electrical circuits. Plaintiff-appellee claimed that the merchandise was properly dutiable at the rate of 9.5, 8, 7, or 6 percent, depending upon the year of entry, under the provision in item 709.66, as modified, for apparatus based on the use of radiations from radioactive substances. Alternatively, plaintiff claimed that the merchandise was dutiable at the rate of 10, 8.5, 7, or 6 percent, depending upon the year of entry, under the provision in item 687.60, as modified, for other electronic tubes. The Customs Court sustained plaintiff's alternative claim under item 687.60 and dismissed plaintiff's primary claim under item 709.66.

Except as to surge voltage protectors not containing radioactive material, it is claimed that the Customs Court erred as follows: In finding and holding that the merchandise is not based on the use of radiation from radioactive substances; in finding and holding that the merchandise is not classifiable under item 709.66, supra, in contravention of schedule 6, part headnote 1(vi), notwithstanding the correct determination that the merchandise is otherwise properly classifiable under item 687.60, supra.

International Trade Commission Notices

Investigations by the U.S. International Trade Commission

DEPARTMENT OF THE TREASURY

The appended notices relating to investigations by the U.S. International Trade Commission are published for the information of Customs Officers and others concerned.

R. E. CHASEN,
Commissioner of Customs.

In the Matter of CERTAIN SLIDE FASTENER STRINGERS AND MACHINES AND COMPONENTS THEREOF FOR PRODUCING SUCH SLIDE FASTENER STRINGERS	Investigation No. 337–TA–85

Notice of Denial of Motion to Strike Certain Portions of the Complaint of Talon Division of Textron, Inc.

Upon consideration of Motion Docket No. 85–2, as certified to the Commission by the Administrative Law Judge (ALJ) on June 25, 1980, and the ALJ's recommendation that the motion be denied, the Commission has ordered that said motion is denied.

Copies of the Commission action and Commission order are available to the public during official working hours at the Office of the Secretary, U.S. International Trade Commission, 701 E. Street NW., Washington, D.C., telephone 202–523–0161.

By order of the Commission.

Issued: July 29, 1980.

KENNETH R. MASON,
Secretary.

Index

U.S. Customs Service

	T.D. No.
Treasury decisions:	
Cotton textiles and cotton textile products—restriction on entry—Brazil	80–198
Cotton, wool, and manmade fiber textile products—restriction on entry—Taiwan	80–202
Manmade fiber textile products—restriction on entry—Taiwan	80–201
Manmade fiber textile products—restriction on entry—Thailand	80–203
Wool and manmade fiber textile products—restriction on entry—Malaysia	80–199
Synopses of drawback decisions:	
Calcined needle petroleum coke	80–200–A
Fabric, polyester/cotton schiffli embroidered	80–200–B
Boiler compounds	80–200–C
Orange juice, canned and orange juice from concentrate	80–200–D
Piece goods, bleached, dyed, and/or mercerized	80–200–E
Hydrogen peroxide	80–200–F
Agricultural implement replacement tillage tools and parts	80–200–G
Steel drums	80–200–H
Preserves and purees	80–200–I
Polycarbonate resin in powder, pellet, and sheet form	80–200–J
Urea-formaldehyde and phenolformaldehyde resins	80–200–K
Raw linseed oil; linseed meal	80–200–L
Barban and Butam, herbicides	80–200–M
N,N-diethyl-m-toluamide (DEET)	80–200–N
Tylan, tylocine	80–200–O
Trucks, tractors, truck-tractors, fire apparatus and automotive assemblies	80–200–P
Tetramethyl ammonium gydroxide	80–200–Q
Pipes	80–200–R
Orange juice, frozen concentrated	80–200–S
Beverages, still and/or carbonated	80–200–T
Sausage casings, finished fibrous artificial	80–200–U
Tungsten products	80–200–V
Orange juice, frozen	80–200–W
Wool tops, superwash shrink-treated wool tops	80–200–X
Ballasts and ballast components	80–200–Y
Sodium hydrosulfite F	80–200–Z
Synopsis of drawback decisions	80–204
Piece goods, cut lace	80–204–A
Quantometers	80–204–B
Propionic acid salt	80–204–C

Furniture fittings 80-204-D
Seamless stainless steel cladding tube 80-204-E
Generating and lighting equipment, portable 80-204-F
Generator sets 80-204-G
Semiconductor devices 80-204-H
Piece goods, greige synthetic 80-204-I
Conveyor belts 80-204-J
Kerosene burning water heaters 80-204-K
Curcuit breakers and components 80-204-L
Hydraulic cranes 80-204-M
Metering pumps, controlled volume 80-204-N
Chambord liqueur 80-204-O
Panels, prefinished plywood door stock 80-204-P
Wetsuits 80-204-Q
Air fresheners 80-204-R
Beverage powdered drink bases, dry 80-204-S
Vinylwood folding doors 80-204-T
Soap, toilet 80-204-U
Trousers and skirts 80-204-V
Parlodel tablets 80-204-W
Diesel engine packages 80-204-X
Pumps, concrete 80-204-Y
Construction equipment 80-204-Z

Customs Court

Appeal to U.S. Court of Customs and Patent Appeals (p. —); Appeal 80-35—Surge voltage protectors; electrical apparatus; electronic tubes; TSUS. Cross-appeal to Appeal 80-33.
"Articles"; Tariff Schedules of the United States, C.D. 4865
Articles not specially provided for, of rubber or plastics: other, C.D. 4865
Casualty loss, evidence of; duties, remission of, C.D. 4864
Classification; TSUS item 771.42 vs. 774.60, C.D. 4865
Construction:
- Code of Federal Regulations, title 19:
  - Sec. 4.14, C.D. 4864
  - Sec. 4.14(e), C.D. 4864
  - Sec. 4.14(h), C.D. 4864
- Protests not to be strictly construed, C.D. 4864
- Public Law 95-410, sec. 206(2), C.D. 4864
- Tariff Act of 1930;
  - Sec. 466(a), C.D. 4864
  - Sec. 466(b)(1), C.D. 4864
  - Sec. 466(d), C.D. 4864
- Tariff Schedules of the United States:
  - General Headnotes and Rules of Interpretation, headnote 9(f)(iii), C.D. 4865
  - Item 355.25, C.D. 4865
  - Item 359.50, C.D. 4865
  - Item 359.60, C.D. 4865
  - Item 771.40, C.D. 4865
  - Item 771.42, C.D. 4865

Item 774.60, C.D. 4865
Schedule 3:
Headnote 5, C.D. 4865
Part 4, subpart C, headnote 1(vii), C.D. 4865
U.S. Code, title 19:
Sec. 1514, C.D. 4864
Sec. 1514(b)(2), C.D. 4864
Sec. 1514(c)(2), C.D. 4864
Customs cases; equitable estoppel, C.D. 4864
Customs Regulations, sec. 4.14(h); remission of duty, petition for, C.D. 4864.
Definition; almost wholly of, C.D. 4865
Duties, remission of; casualty loss, evidence of, C.D. 4864
Equitable estoppel; customs cases, C.D. 4864
Film, strips, sheets * * * wholly or almost wholly of rubber or plastics * * * not of cellulosic plastic materials * * * flexible: other; imitation leather, C.D. 4865
Foreign repairs to United States vessel; jurisdiction, C.D. 4864
"Forrita 80", C.D. 4865
Imitation leather; film, strips, sheets * * * wholly or almost wholly of rubber or plastics * * * not of cellulosic plastic materials * * * flexible: other, C.D. 4865
Jurisdiction:
Foreign repairs to U.S. vessel, C.D. 4864
Lack of, C.D. 4864
Protest, character of, C.D. 4864
Summons, time of filing, C.D. 4864
Lack of jurisdiction, C.D. 4864
Legislative history:
House Report to the Tariff Schedules Technical Amendments Act of 1965, C.D. 4865
House Report No. 342, 89th Cong., 1st Sess. (1965), pp. 10–11, C.D. 4865
Tariff Classification Study, Submitting Report (Nov. 15, 1960), p. 1, C.D. 4865
Liquidation; vessel repair duties, C.D. 4864
Motion to dismiss action; ship repairs, C.D. 4864
Nonwoven fabrics of textile materials of manmade fibers, C.D. 4865
Petition; remission of duty, C.D. 4864
"Plantilla 80", C.D. 4865
Protest:
Character of; Jurisdiction, C.D. 4864
Sufficiency of; standards, C.D. 4864
Protests not to be strictly construed; construction, C.D. 4864
Remission:
Of duties; Secretary of the Treasury, C.D. 4864
Of duty:
Petition, C.D. 4864
Petition for; Customs Regulations, sec. 4.14(h), C.D. 4864
Secretary of the Treasury; remission of duties, C.D. 4864
Ship repairs; motion to dismiss action, C.D. 4864
Standards; protest, sufficiency of, C.D. 4864
Summons, time of filing; jurisdiction, C.D. 4864
Tariff Schedules of the United States; "articles", C.D. 4865

Textile fabrics, including laminated fabrics, not specially provided for:
Of manmade fibers, C.D. 4865
Other, C.D. 4865
TSUS item 771.42 vs. 774.60, C.D. 4865
Vessel repair duties; liquidation, C.D. 4864
Words and phrases:
Almost wholly of, C.D. 4865
Article, C.D. 4865
"Forrita 80", C.D. 4865
"Plantilla 80", C.D. 4865
Wholly or almost wholly of, C.D. 4865

U.S. GOVERNMENT PRINTING OFFICE : 1980 O - 324-902

AUG 29 1980
950-D
T1.1/3:14/35

Customs Bulletin

Regulations, Rulings, Decisions, and Notices concerning Customs and related matters

and Decisions

of the United States Court of Customs and Patent Appeals and the United States Customs Court

324-903
377
9247

Vol. 14 AUGUST 27, 1980 No. 3b

This issue contains

T.D. 80–205 through 80–210
General Notice
C.S.D. 80-126 through 80-150
C.A.D. 1252
C.D. 4866
Protest abstracts 80P/116 through 80P/118
Reap. abstracts 80R/223 through 80R/231
International Trade Commission Notices

THE DEPARTMENT OF THE TREASURY
U.S. Customs Service

NOTICE

The abstracts, rulings, and notices which are issued weekly by the U.S. Customs Service are subject to correction for typographical or other printing errors. Users may notify the U.S. Customs Service, Logistics Management Division, Washington, D.C. 20229, of any such errors in order that corrections may be made before the bound volumes are published.

For sale by the Superintendent of Documents, U.S. Government Printing Office, Washington, D.C. 20402. Price: $2.25 (single copy domestic); $2.85 (single copy foreign). Subscription price: $85.00 a year domestic; $106.25 a year foreign.

U.S. Customs Service

Treasury Decisions

(T.D. 80-205)

Foreign Currencies—Daily Rates for Countries Not on Quarterly List

Rates of exchange based on rates certified to the Secretary of the Treasury by the Federal Reserve Bank of New York for the Brazil cruzeiro, People's Republic of China yuan, Hong Kong dollar, Iran rial, Philippines peso, Singapore dollar, Thailand baht (tical), and Venezuela bolivar

The Federal Reserve Bank of New York, pursuant to section 522(c), Tariff Act of 1930, as amended (31 U.S.C. 372(c)), has certified buying rates for the dates and foreign currencies shown below. The rates of exchange, based on these buying rates, are published for the information and use of Customs officers and others concerned pursuant to part 159, subpart C, Customs Regulations (19 CFR 159, subpart C).

Brazil cruzeiro:	
July 7–11, 1980	$0.0190
People's Republic of China yuan:	
July 7, 1980	$0.682687
July 8–11, 1980	.688895
Hong Kong dollar:	
July 7, 1980	$0.203355
July 8, 1980	.203562
July 9, 1980	.203749
July 10, 1980	.203666
July 11, 1980	.203770
Iran rial:	
July 7–11, 1980	Not available
Philippines peso:	
July 7–11, 1980	$0.1345
Singapore dollar:	
July 7, 1980	$0.474158
July 8, 1980	.473149
July 9, 1980	.474046
July 10, 1980	.474383
July 11, 1980	.474608

Thailand baht (tical):

July 7–11, 1980	$0.0490

Venezuela bolivar:

July 7–11, 1980	$0.2329

(LIQ-3-TRODE)

Dated: August 5, 1980.

G. SCOTT SHREVE
(For Richard Rosettie, Acting
Director, Duty Assessment Division).

(T.D. 80-206)

Foreign Currencies—Daily Rates for Countries Not on Quarterly List

Rates of exchange based on rates certified to the Secretary of the Treasury by the Federal Reserve Bank of New York for the Brazil cruzeiro, People's Republic of China yuan, Hong Kong dollar, Iran rial, Philippines peso, Singapore dollar, Thailand baht (tical), and Venezuela bolivar

The Federal Reserve Bank of New York, pursuant to section 522(c), Tariff Act of 1930, as amended (31 U.S.C. 372(c)), has certified buying rates for the dates and foreign currencies shown below. The rates of exchange, based on these buying rates, are published for the information and use of Customs officers and others concerned pursuant to part 159, subpart C, Customs Regulations (19 CFR 159, subpart C).

Brazil cruzeiro:	
July 14–17, 1980	$0.0191
July 18, 1980	.0187
People's Republic of China yuan:	
July 14, 1980	$0.688895
July 15, 1980	.692329
July 16–18, 1980	.688895
Hong Kong dollar:	
July 14, 1980	$0.203749
July 15, 1980	.203521
July 16, 1980	.203749
July 17, 1980	.203687
July 18, 1980	.203562
Iran rial:	
July 14–18, 1980	Not available
Philippines peso:	
July 14–18, 1980	$0.1345
Singapore dollar:	
July 14, 1980	$0.473485
July 15–16, 1980	.473261

July 17, 1980	.474046
July 18, 1980	.472367
Thailand baht (tical):	
July 14–18, 1980	$0.0490
Venezuela bolivar:	
July 14–18, 1980	$0.2329

(LIQ-3-TRODE)

Dated: August 5, 1980.

G. SCOTT SHREVE
(For Richard Rosettie, Acting
Director, Duty Assessment Division).

(T.D. 80-207)

Foreign Currencies—Daily Rates for Countries Not on Quarterly List

Rates of exchange based on rates certified to the Secretary of the Treasury by the Federal Reserve Bank of New York for the Brazil cruzeiro, People's Republic of China yuan, Hong Kong dollar, Iran rial, Philippines peso, Singapore dollar, Thailand baht (tical), and Venezuela bolivar

The Federal Reserve Bank of New York, pursuant to section 522(c), Tariff Act of 1930, as amended (31 U.S.C. 372(c)), has certified buying rates for the dates and foreign currencies shown below. The rates of exchange, based on these buying rates, are published for the information and use of Customs officers and others concerned pursuant to part 159, subpart C, Customs Regulations (19 CFR 159, subpart C).

Brazil cruzeiro:	
July 21–25, 1980	$0.0187
People's Republic of China yuan:	
July 21–25, 1980	$0.688895
Hong Kong dollar:	
July 21, 1980	$0.203521
July 22, 1980	.203749
July 23, 1980	.203355
July 24, 1980	.203252
July 25, 1980	.202922
Iran rial:	
July 21–25, 1980	Not available
Philippines peso:	
July 21–25, 1980	$0.1345
Singapore dollar:	
July 21, 1980	$0.473597
July 22, 1980	.473485
July 23, 1980	.473597

July 24, 1980	.473485
July 25, 1980	.473709
Thailand baht (tical):	
July 21–25, 1980	$0.0490
Venezuela bolivar:	
July 21–25, 1980	$0.2329

(LIQ-3-TRODE)

Dated: August 5, 1980.

G. SCOTT SHREVE
(For Richard Rosettie, Acting
Director, Duty Assessment Division).

(T.D. 80-208)

Manmade Fiber Textile Products—Restriction on Entry

Restriction on entry of manmade fiber textile products manufactured or produced in Malaysia

There is published below a directive of June 6, 1980, received by the Commissioner of Customs from the acting chairman, Committee for the Implementation of Textile Agreements, concerning restriction on entry of manmade fiber textile products in category 613 manufactured or produced in Malaysia. This directive amends, but does not cancel, that committee's directive of December 11, 1979 (T.D. 80-52).

This directive was published in the Federal Register on June 11, 1980 (45 F.R. 39528), by the committee.

(QUO-2-1)

Dated: August 6, 1980.

WILLIAM D. SLYNE
(For Chester R. Krayton,
Director, Duty Assessment Division).

U.S. DEPARTMENT OF COMMERCE,
INTERNATIONAL TRADE ADMINISTRATION,
Washington, D.C., June 6, 1980.

Committee for the Implementation of Textile Agreements

COMMISSIONER OF CUSTOMS,
Department of the Treasury,
Washington, D.C.

DEAR MR. COMMISSIONER: This directive further amends, but does not cancel, the directive issued to you on December 11, 1979, by the

chairman, Committee for the Implementation of Textile Agreements, concerning imports into the United States of certain cotton, wool, and manmade fiber textile products, produced or manufactured in Malaysia.

Under the terms of the Arrangement Regarding International Trade in Textiles done at Geneva on December 20, 1973, as extended on December 15, 1977; pursuant to the Bilateral Cotton, Wool and Man-Made Fiber Textile Agreement of May 17 and June 8, 1978, as amended, and in accordance with the provisions of Executive Order 11651 of March 3, 1972, as amended by Executive Order 11951 of January 6, 1977, you are directed to prohibit, effective on June 6, 1980, and for the 12-month period which began on January 1, 1980, and extends through December 31, 1980, entry into the United States for consumption and withdrawal from warehouse for consumption of manmade fiber textile products in category 613, produced or manufactured in Malaysia, in excess of 2,660,000 square yards.[1]

The action taken with respect to the Government of Malaysia and with respect to imports of manmade fiber textile products from Malaysia has been determined by the Committee for the Implementation of Textile Agreements to involve foreign affairs functions of the United States. Therefore, the directions to the Commissioner of Customs, which are necessary for the implementation of such actions, fall within the foreign affairs exception to the rulemaking provisions of 5 U.S.C. 553. This letter will be published in the Federal Register.

Sincerely,

ARTHUR GAREL,
Acting Chairman, Committee for the Implementation of Textile Agreements.

(T.D. 80-209)

Cotton Textile Products—Restriction on Entry

Restriction on entry of cotton textile products manufactured or produced in Malaysia

There is published below a directive of July 24, 1980, received by the Commissioner of Customs from the chairman, Committee for the Implementation of Textile Agreements, concerning restriction on entry of cotton textile products in certain categories manufactured or produced in Malaysia. This directive amends, but does not cancel, that committee's directive of December 11, 1979 (T.D. 80-52).

[1] The level of restraint has not been adjusted to reflect any imports after Dec. 31, 1979.

This directive was published in the Federal Register on July 29, 1980 (45 F.R. 50378), by the committee.

(QUO-2-1)

Dated: August 11, 1980.

WILLIAM D. SLYNE
(For Richard R. Rosettie, Acting
Director, Duty Assessment Division).

U.S. DEPARTMENT OF COMMERCE,
INTERNATIONAL TRADE ADMINISTRATION,
Washington, D.C., July 24, 1980.

Committee for the Implementation of Textile Agreements

COMMISSIONER OF CUSTOMS,
Department of the Treasury,
Washington, D.C.

DEAR MR. COMMISSIONER: This directive further amends, but does not cancel, the directive issued to you on December 11, 1979, by the chairman, Committee for the Implementation of Textile Agreements, concerning imports into the United States of certain cotton, wool, and manmade fiber textile products, produced or manufactured in Malaysia, and exported during the 12-month period which began on January 1, 1980.

Under the terms of the Arrangement Regarding International Trade in Textiles done at Geneva on December 20, 1973, as extended on December 15, 1977; pursuant to the Bilateral Cotton, Wool and Man-Made Fiber Textile Agreement of May 17 and June 8, 1978, as amended; and in accordance with the provisions of Executive Order 11651 of March 3, 1972, as amended by Executive Order 11951 of January 6, 1977, you are directed to prohibit, effective on August 1, 1980, and for the 12-month period beginning on January 1, 1980, and extending through December 31, 1980, entry into the United States for consumption and withdrawal from warehouse for consumption of cotton textile products in category 333/334/335, produced or manufactured in Malaysia, in excess of the following level of restraint:

Category	*12-month level of restraint* [1]
333/334/335	60,380 dozen of which not more than 24,127 dozen shall be in category 333; not more than 21,147 dozen shall be in category 334; and not more than 21,147 dozen shall be in category 335.

[1] The level of restraint has not been adjusted to reflect any imports after Dec. 31, 1979.

Cotton textile products in category 333/334/335 which have been exported to the United States prior to January 1, 1980, shall not be subject to this directive.

Cotton textile products in category 333/334/335 which have been released from the custody of the U.S. Customs Service under the provisions of 19 U.S.C. 1448(b) or 1484(a)(1)(A) prior to the effective data of this directive shall not be denied entry under this directive.

A detailed description of the textile categories in terms of TSUSA numbers was published in the Federal Register on February 28, 1980 (45 F.R. 13172), as amended on April 23, 1980 (45 F.R. 27463).

In carrying out the above directions, entry into the United States for consumption shall be construed to include entry for consumption into the Commonwealth of Puerto Rico.

The actions taken with respect to the Government of Malaysia and with respect to imports of cotton textile products from Malaysia have been determined by the Committee for the Implementation of Textile Agreements to involve foreign affairs functions of the United States. Therefore, the directions to the Commissioner of Customs, which are necessary for the implementation of such actions, fall within the foreign affairs exception to the rulemaking provisions of 5 U.S.C. 553. This letter will be published in the Federal Register.

Sincerely,

PAUL T. O'DAY,
Chairman, Committee for the Implementation of Textile Agreements.

(T.D. 80-210)

Reimbursable Services—Excess Cost of Preclearance Operations

DEPARTMENT OF THE TREASURY,
OFFICE OF THE COMMISSIONER OF CUSTOMS,
Washington, D.C., August 12, 1980.

Notice is hereby given that pursuant to section 24.18(d), Customs Regulations (19 CFR 24.18(d)), the biweekly reimbursable excess costs for each preclearance installation are determined to be as set forth below and will be effective with pay period beginning August 24, 1980.

324-903 O - 80 - 2

Installation:	Biweekly excess cost
Montreal, Canada	$15, 984
Toronto, Canada	31, 347
Kindley Field, Bermuda	5, 315
Nassau, Bahama Islands	18, 844
Vancouver, Canada	20, 974
Winnipeg, Canada	1, 969
Freeport, Bahama Islands	17, 036
Calgary, Canada	9, 019
Edmonton, Canada	9, 817

JACK T. LACY, *Comptroller.*

[Published in the Federal Register, Aug. 18, 1980 (45 F.R. 54931)]

U.S. Customs Service

General Notices

(TMK-2-RRUEE)

Notice of Application for Recordation of Trade Name R.B.K. Importers, Inc.

Application has been filed pursuant to section 133,12, Customs Regulations (19 CFR 133.12), for the recordation under section 42 of the act of July 5, 1946, as amended (15 U.S.C. 1124), of the trade name R.B.K. Importers, Inc., used by R.B.K. Importers, Inc., a corporation organized under the laws of the State of Delaware, located at 940 South Alameda Street, Los Angeles, Calif. 90021.

The application states that the trade name is associated with women's wearing apparel and sportswear including but not limited to sweaters, skirts, tops, jackets, shirts, jeans, and slacks. The application states further that no foreign firm is authorized to use the trade name sought to be recorded. Appropriate accompanying papers were submitted with the application.

Before final action is taken on the application, consideration will be given to any relevant data, views, or arguments submitted in writing by any person in opposition to the recordation of this trade name. Any such submission should be addressed to the Commissioner of Customs, Washington, D.C. 20229, in time to be received not later than 30 days from the date of publication of this notice in the Federal Register.

Notice of the action taken on the application for recordation of the trade name will be published in the Federal Register.

Dated: August 8, 1980.

DONALD W. LEWIS,
Director, Office of Regulations and Rulings.

(TMK-2-RRUEE)

Notice of Application for Recordation of Trade Name Donnkenny, Inc.

Application has been filed pursuant to section 133.12, Customs regulations (19 CFR 13.12), for the recordation under section 42 of the

act of July 5, 1946, as amended (15 U.S.C. 1124), of the trade name Donnkenny, Inc., used by Donnkenny, Inc., a corporation organized under the laws of the State of Delaware, located at 1411 Broadway, New York, N.Y. 10018.

The application states that the trade name is associated with women's wearing apparel and sportswear including but not limited to sweaters, skirts, tops, jackets, shirts, jeans, and slacks. The application states further that no foreign firm is authorized to use the trade name sought to be recorded. Appropriate accompanying papers were submitted with the application.

Before final action is taken on the application, consideration will be given to any relevant data, views, or arguments submitted in writing by any person in opposition to the recordation of this trade name. Any such submission should be addressed to the Commissioner of Customs, Washington, D.C. 20229, in time to be received not later than 30 days from the date of publication of this notice in the Federal Register.

Notice of the action taken on the application for recordation of the trade name will be published in the Federal Register.

Dated: August 8, 1980.

SALVATORE E. CARAMAGNO,
Acting Director, Office of Regulations and Rulings.

(521743)

Garments With Traditional, but Primarily Decorative Features: Garments With Simulated Features: Ornamented Wearing Apparel; Change of Practice Considered: 19 CFR Part 177

AGENCY: U.S. Customs Service, Department of the Treasury.

ACTION: Proposed change of practice.

SUMMARY: This document gives notice that the Customs Service is reviewing the current uniform and established practice of classifying certain garments with traditional, but primarily decorative, features as nonornamented wearing apparel. The practice of classifying certain garments with simulated features as nonornamented is also under review. The Customs Service is considering whether it must classify garments with traditional, but primarily decorative features, and garments with simulated features, as ornamented wearing apparel. The Customs Service is seeking public comment as to whether a recent decision of the Customs Court requires these changes.

DATE: Comments (preferably in triplicate) must be received on or

before (30 days from the date of publication of this notice in the Federal Register).

ADDRESS: Comments should be addressed to the Commissioner of Customs, attention: Regulations and Research Division, 1301 Constitution Avenue NW., Washington, D.C. 20229.

FOR FURTHER INFORMATION CONTACT: Philip Robins, Classification and Value Division, U.S. Customs Service, 1301 Constitution Avenue NW., Washington, D.C. 20229; 202-566-8181.

SUPPLEMENTARY INFORMATION:

BACKGROUND

Pursuant to uniform and established practices, the Customs Service has classified various types of garments with traditional features which are also decorative as nonornamented wearing apparel. These features have included epaulets on raincoats, bush-safari jackets, and military-style garments, D-rings on the belts of trenchcoats, and overlaid yokes on Western-style shirts. It has also been the practice to classify garments with simulated features as nonornamented wearing apparel on the ground that the simulation is of a feature otherwise functional. These features have included simulated buttonholes, pockets, pocket flaps, belts and belt segments, or front openings (plackets).

Recently, in *The Ferriswheel* v. *United States*, C.D. 4844 (Feb. 21, 1980), the U.S. Customs Court held Scottish Highland jackets, having traditional (but primarily decorative) epaulets, and braid which simulates buttonholes, to be thereby ornamented. In holding the merchandise to be classifiable as ornamented wearing apparel, the court found the jacket epaulets and braid to be primarily ornamental or decorative, i.e., intended primarily to enhance the beauty and appearance of the garments by adornment or embellishment. *Blairmoor Knitwear Corp.* v. *United States*, 60 Cust. Ct. 388, C.D. 3396, 284 F. Supp. 315 (1968). That the ornamental braid and epaulets are traditional in Highland dress, the court held, did not preclude classification as ornamented wearing apparel. While *Ferriswheel* upheld the Customs classification in that case, this opinion may be contrary to Customs' uniform and established practice of classifying other types of garments with traditional, but primarily decorative features, as nonornamented wearing apparel.

PROPOSED CHANGE OF PRACTICE

The Customs Service is considering whether the opinion in the *Ferriswheel* case requires it to classify all garments having traditional, but primarily decorative, features as ornamented wearing apparel. Such a change of practice might affect raincoats, bush-safari jackets, and military-style garments, all having epaulets, trenchcoats with

D-rings, and Western-style shirts with overlaid yokes, as well as all other garments with traditional features which might be considered to be primarily decorative.

The Customs Service is also considering whether the opinion in this case also requires it to classify garments with simulated features as ornamented wearing apparel. Subject to this change of practice would be garments with simulated buttonholes, pockets, pocket flaps, belts and belt segments, or front openings (plackets), as well as garments with any other simulated feature, notwithstanding that such simulation is of a feature otherwise functional.

The Customs Service seeks public comment as to the applicability of this opinion and as to whether these traditional and simulated features are primarily decorative or primarily functional.

AUTHORITY

Inasmuch as the proposed change of practice will affect the assessed duties on garments subject to such change, the Customs Service is giving this notice and opportunity for comment in accordance with section 315(d) of the Tariff Act of 1930, as amended (19 U.S.C. 1315(d)), and section 177.10(c)(1) of the Customs Regulations (19 CFR 177.10(c)(1)).

Consideration will be given to any written comments submitted in writing to the Commissioner of Customs. Comments submitted will be available for public inspection in accordance with section 103.8(b), Customs Regulations (19 CFR 103.8(b)), during regular business hours at the Regulations and Research Division, Headquarters, room 2426, U.S. Customs Service, 1301 Constitution Avenue NW., Washington, D.C. 20229.

DRAFTING INFORMATION

The principal author of this notice was Harold I. Loring, Regulations and Research Division, U.S. Customs Service. However, personnel from other offices of the U.S. Customs Service participated in developing this notice, both on matters of style and substance.

R. E. CHASEN,
Commissioner of Customs.

Approved: August 5, 1980.

RICHARD J. DAVIS,
Assistant Secretary of the Treasury.

U.S. Customs Service

Customs Service Decisions

DEPARTMENT OF THE TREASURY,
OFFICE OF THE COMMISSIONER OF CUSTOMS,
Washington, D.C.

The following are decisions made by the U.S. Customs Service where the issues involved are of sufficient interest or importance to warrant publication in the Customs Bulletin.

Dated: August 8, 1980.

DONALD W. LEWIS,
Director, Office of Regulations and Rulings.

(C.S.D. 80-126)

Carrier Control: Treatment of Aircraft as Commercial or Private for Customs Purposes

Date: October 10, 1979
File: AIR-4-02-R:CD:C
104245 JM

This ruling concerns the treatment of an aircraft as private or commercial for purposes of Customs clearance.

Issue.—Is an aircraft, owned and leased by one part owner of an air charter service to another part owner of the air charter service and piloted by an employee of the air charter service, considered to be private or commercial when used by the Lessee to transport prospective customers of a construction company owned solely by the Lessee?

Facts.—On July 31, 1979, an aircraft owned by (person) (lessor), of Bismarck, N. Dak., was leased to (company No. 1) (lessee), of the same city for a term of 2 years. The lease provided that the lessor was responsible for normal maintenance of the aircraft, that the lessor would furnish fuel and oil for the aircraft, that the lessor would pay charges for hanger and other airport facilities while the aircraft is in

Bismarck, and that the lessee would pay the lessor "a sum equal to 76 cents per mile travel." The lease also provided that the lessor could use the aircraft or lease it to others so long as it did not interfere with the lessees' anticipated use thereof.

On August 1, 1979, the aircraft left the United States, proceeded to Canada, where it loaded directors (or board members) of a local grain elevator, and transported these persons to cities in the United States where the lessee was constructing grain handling facilities. The aircraft was piloted on this flight by (person) an employee of (company No. 2), an air charter service partly owned by the lessor and partly owned by (company No. 1) who is the lessee. A penalty was issued against the pilot for failing to obtain outward clearance and failing to file an outward general declaration prior to the aircraft's departing the United States to take aboard passengers for hire outside the United States. The pilot has requested relief stating that non-owner passengers were not charged for the trip and, therefore, the trip would not be considered commercial under Customs laws. The Acting Director of Customs, Pembina, N. Dak., has requested internal advice, under the provisions of section 177.11, Customs Regulations, concerning the treatment of the aircraft as private or commercial for the purposes of Customs clearance.

Law and analysis.—Customs has defined "private aircraft" as any civil aircraft engaged in a personal or business flight to or from the United States and not carrying passengers and/or cargo for compensation or hire, nor departing from the United States for purposes of loading passengers and/or cargo for compensation or hire. This definition interprets section 6.3 (a) and (c), Customs Regulations, relating to entry and clearance of aircraft and is in agreement with the definition of "private aircraft" contained in title 49, United States Code, section 1741. The term "private aircraft" is defined in section 1741(d)(1) as "any civilian aircraft not being used to transport persons or property for compensation or hire." Guidelines on the application of section 1741(d)(1), and section 6.3, Customs Regulations, state that for Customs purposes, a person transported for compensation or hire on an aircraft is a person who would not be transported unless there was some payment by or for him and who is not connected with the operation of the aircraft or its navigation, ownership, or business.

In the present case, the method of payment is somewhat different than that of the usual airline passenger. However, it is clear that none of the prospective customers of (company No. 1) would be transported on the flight without payment of the amount agreed to in the lease. The lessee merely paid a charge based on mileage flown

while the lessor retained control of the aircraft (supplying fuel, hanger facilities, and reserving the right to lease the aircraft to third parties). In addition, the pilot was not an employee of the lessee but an employee of the air charter service which is owned partly by the lessor and partly by the lessee. In effect, the lessor furnished an "air transportation service rather than a mere aircraft to be operated by the lessee in the lessee's construction business. Customs has consistently held that such use constitutes commercial use of the aircraft for the purposes of Customs entry and clearance laws and has published this concept as paragraph 2a in the information sheet, definition of a private aircraft for U.S. Customs purposes, distributed to field offices and the public by the Office of Operations.

Holding.—An aircraft, owned and leased by one part owner of an air charter service to another part owner of the air charter service and piloted by an employee of the air charter service, is a commercial aircraft when used by the lessee to transport prospective customers of a construction company owned solely by the lessee.

(C.S.D. 80–127)

Clearance: Procedure for Aircraft Departing a U.S. Port for a Foreign Port via Another U.S. Port

Date: October 11, 1979
File: AIR–4–02–R:CD:C
104234 JM
104050

This ruling concerns the Customs procedures to be followed when an aircraft of a scheduled airline departs from a U.S. port for a foreign port via another U.S. port.

Issue.—Whether an aircraft of a scheduled airline departing from the U.S. port of origin on a flight for a foreign port via another U.S. port with passengers for the foreign port is required to obtain clearance at the port of origin of the flight.

Facts.—Aircraft depart on scheduled flights from Anchorage, Alaska, to Whitehorse, Yukon Territory, via Fairbanks, Alaska. The District Director at Anchorage previously asked whether clearance from Anchorage for Whitehorse would be required in view of a ruling from the region that in the case of a nonscheduled flight, a permit to proceed is required. The region indicated that, pursuant to section 6.3, 6.5, and 6.8 of the Customs Regulations, a clearance would be required in the case of a scheduled flight. On July 26, 1979, a ruling (104050) was issued by Headquarters, U.S. Customs Service, concern-

324-903 O - 80 - 3

ing this matter. The subject ruling is being issued to modify and clarify the previous ruling.

Law and analysis.—Section 6.5(a), Customs Regulations, states in pertinent part that aircraft operated by scheduled airlines departing for any place outside the United States must clear if the aircraft is (1) beginning a flight in the area, or (2) carrying from the area merchandise which must be listed on the general declarations. "Area" as used in section 6.5(a) is defined as either (1) the States and the District of Columbia or (2) Puerto Rico in section 6.1(c), Customs Regulations. Therefore, section 6.5(a) requires aircraft departing the United States (including the District of Columbia) or Puerto Rico for any place outside of the United States to clear if they are beginning a flight in the United States or Puerto Rico, or are carrying merchandise from the United States or Puerto Rico.

The provisions of section 6.5(a), which make clearance mandatory under the conditions listed above, are separate and distinct from section 6.5(c) which sets out the procedure for obtaining clearance. Section 6.5(c) provides that if an aircraft is required to clear within the meaning of section 6.5(a), then clearance may be obtained at the port of entry nearest each place at which merchandise or passengers, or both, are taken aboard for discharge beyond the area. This procedure is not mandatory but available at the option of the aircraft commander and, if chosen, the clearance obtained is limited to the passengers and merchandise taken aboard at such place. Otherwise, clearance, or permission to depart, for aircraft operated by scheduled airlines shall be obtained at or nearest the place of last takeoff in the area unless some other place is designated by the District Director.

Holding.—Where an aircraft begins a scheduled flight in Anchorage, Alaska, for Whitehorse, Yukon Territory, via Fairbanks, Alaska, section 6.5 of the Customs Regulations allows but does not require, aircraft to obtain at Anchorage a clearance for Whitehorse for any passengers or merchandise laden at Anchorage for Whitehorse. This is because the aircraft is not leaving one area (Anchorage) for another area (Fairbanks) as that term is defined in the regulations. If such clearance is obtained at Anchorage, the aircraft commander or authorized person will obtain at Fairbanks a clearance for Whitehorse for any passengers or merchandise laden at Fairbanks. Otherwise, clearance for the aircraft shall be obtained at Fairbanks unless some other place is designated by the District Director at Anchorage.

(C.S.D. 80-128)

Value: 19 U.S.C. 1402(e); Existence of "Similar" Merchandise as Basis of Appraisement

Date: October 11, 1979
File: R:CV:V GE
061203

Re Application for further review of protest No. 2002-8-000067.

DISTRICT DIRECTOR OF CUSTOMS,
New Orleans, La.

DEAR SIR: This ruling concerns the valuation of cameras imported from Japan by a large retail chain in the United States.

Issue.—Whether the proper basis of appraisement of the subject cameras is U.S. value under 19 U.S.C. 1402 and, if so, whether U.S. value is represented by the invoice price of the subject merchandise.

Facts.—The importer, a nationwide chain of retail department stores, imported cameras manufactured under the importer's brand name (subject cameras) by a company in Japan. The Japanese manufacturer, in addition to selling to the importer, also sells cameras under its own name (other cameras) for export to the United States at a wholesale price higher than the invoice price of the subject cameras.

The importer contends that the cameras imported under the manufacturer's name are not "such or similar imported merchandise" under section 1402(e) of title 19, United States Code, and that the wholesale price of the other cameras is therefore not a proper indication of the U.S. value of the subject cameras. The importer further contends that cost of production, under section 1402(f), is the proper basis of appraisement and is accurately reflected by the invoice price of the subject cameras. Protestant does not contest the determination that due to the manufacturer's restrictions on sales, neither foreign nor export value provide a proper basis of appraisement.

Your office is in agreement that the other cameras are not such merchandise, that is, they are not identical with the subject cameras. However, your office is of the opinion that the other cameras are similar merchandise and that therefore the subject cameras must be appraised under U.S. value.

Law and analysis.—It is the opinion of Headquarters that U.S. value is the proper basis of appraisement in light of the fact that similar merchandise is freely offered for sale for consumption in the United States.

Since the subject cameras are on the final list (T.D. 54521), they should be valued pursuant to title 19, United States Code, section 1402 (old value law).

Section 1402(a) provides, in relevant part:

> For the purposes of this chapter the value of imported articles designated by the Secretary of the Treasury as provided for in section 6(a) of the Customs Simplification Act of 1956 sha l be:
> (1) The foreign value or the export value, whichever is higher;
> (2) If the appraiser determines that neither the foreign value nor the export value can be satisfactorily ascertained, then the U.S. value;
> (3) If the appraiser determines that neither the foreign value, the export value, nor the U.S. value can be satisfactorily ascertained, then the cost of production;

Section 1402(e) in relevant part defines U.S. value as follows:

> The U.S. value of imported merchandise shall be the price at which such or similar imported merchandise is freely offered for sale for domestic consumption, packed ready for delivery, in the principal market of the United States to all purchasers, at the time of exportation of the imported merchandise, in the usual wholesale quantities and in the ordinary course of trade, with allowance made for duty, cost of transportation and insurance, and other necessary expenses from the place of shipment to the place of delivery.

U.S. value exists in this case if the other cameras, which were used as prototype merchandise for appraisement purposes, are similar to the subject merchandise. The similar imported merchandise does not have to be identical to the subject merchandise in order for an appraisement to be made on the basis of U.S. value. Similar merchandise means goods which are commercially interchangeable, are of approximately the same materials, approximately the same price, and adapted to the same uses. See *B. A. McKenzie & Co. Inc.* v. *United States*, 47 CCPA 143 (1960); *United States* v. *Irving Massin & Bros.*, 16 Ct. Cust. App. 19 (11928).

The Area Director is of the opinion that the cameras are commercially interchangeable based on the construction, features, and reputation of the respective cameras, on the fact that the cameras are manufactured by the same company, and the fact that the importer's models change at the same time as the other cameras that are exported by the manufacturer. Further, the cameras are of approximately the same materials, close in terms of price, and adapted to the same uses.

The importer has presented no evidence that the cameras are not similar and that the appraisement based on U.S. value is improper. The difference between the invoice price of the subject cameras and the price of the other imported cameras of approximately 24 percent in itself is not sufficient to establish that the cameras are dissimilar.

Accordingly, we are unable to conclude that the appraising officer acted incorrectly.

Holding.—Therefore, we find that U.S. value under 19 U.S.C. section 1402(e) is the proper basis of appraisement, as represented by the price of similar imported merchandise freely offered for sale in the United States in wholesale quantities, reduced by the appropriate statutory allowances. Pursuant to the foregoing, you are directed to deny the protest in full.

(C.S.D. 80-129)

Drawback: Transfer of Distilled Spirits to Customs Bonded Warehouse as an "Exportation" Under 19 U.S.C. 1313 (a) and (b)

Date: June 3, 1980
File: DRA-1-RRUCDB NK
211231

Issue.—Whether the transfer of distilled spirits from a bonded internal revenue distilled spirits plant or export storage facility to a Customs bonded warehouse for storage pending exportation satisfies the exportation requirement of the drawback law under 19 U.S.C. 1313 (a) and (b).

Facts.—Imported distilled spirits were withdrawn from a Customs bonded warehouse for consumption after the payment of Customs duties. Internal revenue taxes were not paid because the merchandise was transferred to a distilled spirits plant under bond approved by the Bureau of Alcohol, Tobacco, and Firearms. The processing of the merchandise at the distilled spirits plant satisfied the manufacture or production requirement of the drawback law (19 U.S.C. 1313(a)). The merchandise was then transferred to a Customs bonded warehouse, class 3, for storage pending exportation.

Law and analysis.—The act of November 14, 1977, Public Law 95-176, 91 Stat. 1363, amended the Internal Revenue Code relating to imported distilled spirits. Among other things, it extended tax drawback to imported distilled spirits that are packaged or bottled in the United States for export and allowed distilled spirits bottled in bond, or returned to an export storage facility for export, to be transferred without payment of tax to Customs bonded warehouses for storage pending exportation.

Public Law 95-176 concerned drawback of internal revenue tax under certain provisions of the Internal Revenue Code. It did not affect drawback for Customs duties under sections 1313 (a) and (b), title 19, United States Code, and applicable regulations of part 22 of the Customs Regulations. Under these provisions of law, drawback is not applicable unless the articles manufactured or produced

under drawback conditions are exported within certain time limitations. To constitute an exportation within the meaning of sections 1313 (a) and (b), two essential elements are required:

(1) A severance of goods from the mass of things belonging to this country, i.e., a carrying of the goods out of the country, and;

(2) An intention of uniting them with the mass of things belonging to some foreign country. See *Swan & Finch Co.* v. *United States*, 190 U.S. 143.

Under the facts cited, the distilled spirits were not exported for drawback purposes under sections 1313 (a) and (b).

Holding.—The transfer of distilled articles from a bonded Internal Revenue distilled spirits plant or export storage facility to a Customs bonded warehouse for storage pending exportation does not constitute exportation for drawback as required under sections 1313 (a) and (b), title 19, United States Code.

(C.S.D. 80-130)

Valuation: Whether Lubrication Fittings Are Finished Automobile Parts for Purposes of the Final List

Date: October 15, 1979
File: R:CV:V
061612 JV

To: District Director of Customs, Cleveland, Ohio.
From: Director, Classification and Value Division.
Subject: Internal Advice Request No. 188/79.

The subject of this request involves the question of whether lubrication fittings are covered by the final list (19 U.S.C. 1402) provision for "automobile parts, finished", and therefore subject to appraisement under the provisions of section 402a, Tariff Act of 1930, as amended.

It is the position of the inquirer that lubrication fittings are not dedicated for use with automobiles and since not classified as automobile parts under 692.27, Tariff Schedules of the United States (TSUS), should not be considered final list merchandise.

As you know, the final list study makes no reference to lubrication fittings. However, we have been able to determine that at the time the list was promulgated, such fittings were considered finished automobile parts. While it is recognized that lubrication fittings are capable of other uses, the final list, as its name implies, is final. There can be neither additions to it nor deletions therefrom, except by law. It is not an administrative compilation which Customs has the authority to amend. It can only be amended by Congress.

It is reasonable to assume that at the time the final list was promulgated, Congress knew that finished automobile parts could, at

some future time, be susceptible to other uses. Nevertheless, there does appear the specific enumeration for such parts. Therefore, since there can be no changes as regards the final list, except by law, we cannot offer an alternative to the present practice of appraising lubrication fittings under the provisions of section 402a.

We believe this to be consistent with Headquarters position in reply to internal advice request No. 12/76. We maintained that simply because the article under consideration (electric motor) was of greater technical sophistication than an electric motor, not over 75 horsepower, known at the time the final list was promulgated, did not preclude the article in question from the final list. Our conclusion was predicated on the assumption that Congress knew an electric motor, not over 75 horsepower, could be technically improved over the years and, hence, capable of other applications.

A distinction must be made between the classification of an article for tariff purposes and the determination as to whether an article is on the final list for appraisement purposes. The intent of the TSUS, the authority for which is contained in the Tariff Act of 1930, as amended, was to describe as completely as possible all imported articles for the assessment of duty. The intent of the final list, the authority for which is contained in section 6(a) Public Law 927, 84th Congress, was to itemize articles or classes of articles which, when appraised under the new valuation law (sec. 402), would result in a 5-percent or more decrease in valuation.

Keeping this distinction in mind, it should be noted that the language of a given listing on the final list does not necessarily bear a relationship to the classification of an imported article, although the same language may have been employed on the list and in the tariff schedules (C.S.D. 79–267). The terminology of the final list is much broader and general in nature than that of the schedules. Therefore, an article which is specifically provided for in the schedules (e.g., lubrication fittings) may be included under a more general category of the final list (e.g., automobile parts, finished). On the other hand, *all items belonging to this general category of the list would not* necessarily be classified under the specific provision of the TSUS. Accordingly, the fact that lubrication fittings are classified eo nomine under 680.57, TSUS, and not under the provision for automobile parts in 692.27, TSUS, is not determinative of their final list applicability.

Based on the foregoing, we conclude that lubrication fittings, regardless of use, are covered by the final list provision for automobile parts, finished, and therefore subject to appraisement under the provisions of section 402a.

(C.S.D. 80–131)

Carrier Control: Whether a Non-Coastwise-Qualified Tug May Engage in Berthing Operations Within a U.S. Harbor

Date: October 17, 1979
File: VES–10–03:R:CD:C
104220 JL

This is in reference to your letter of August 21, 1979, in which you ask for clarification of our ruling of August 15, file VES–10–03–R:CD:C 103910 TL.

You state that the Coast Guard informs that your client's tug which will be wholly owned by U.S. citizens may be entitled to U.S. documentation if it does not engage in coastwise trading. You note that our ruling of August 15, 1979, states that 46 U.S.C. 316(a) prohibits a tug from assisting American vessels to berth if the tug is not wholly owned by U.S. citizens within the meaning of 46 U.S.C. 802 and the tug does not have in force valid U.S. documentation. It is your opinion that assisting vessels to berth does not constitute transportation of merchandise or passengers for hire. You urge that inasmuch as the contemplated activity would not be between points in the United States but within one consolidated port of entry there would be no coastwise trade involved.

There were two holdings in our August 15, 1979 ruling, to wit:

1. A non-coastwise-qualified vessel cannot tow an American vessel from one point to another in a U.S. harbor unless the vessel is in distress, pursuant to 46 U.S.C. 316(a).

2. The activity of assisting vessels in berthing operations is "towing" within the meaning of section 316(a).

It follows then that a non-coastwise-qualified vessel (which an American documented vessel whose register carries a restrictive endorsement prohibiting engagement in coastwise trade is) is prohibited by 46 U.S.C. 316(a) from assisting vessels in bething operations within a U.S. harbor, unless the vessel is in distress.

While we do not address whether assisting vessels to berth constitutes transportation of merchandise or passengers, you will note that towing is the coastwise activity addressed in section 316(a), not the carriage of passengers or merchandise.

As to whether geographical points within one consolidated port of entry are points within the United States, we need only look to the clear language of the statute itself which prohibits the towing

> from any port or place in the United States, its territories or possessions, embraced within the coastwise laws of the United States, to any other port or place within the same, either directly or by way of a foreign port or place, or to do any part of such towing, or to tow any such vessel *from point to point within the harbor of such places*. [Italic supplied.]

(C.S.D. 80-132)

Drawback: Use of Low-to-High Basis for Identification for Drawback Under 19 CFR 22.4(f)

Date: October 17, 1979
File: DRA-1-09-R:CD:D B
210943

Issue.—Must a drawback claimant, holding an approved rate under 19 U.S.C. 1313(a), use the low-to-high designation principle set out in section 22.4(f), Customs Regulations, when currency fluctuations cause variances in dutiable values of like merchandise imported under different entries and commingled after importation?

Facts.—A drawback claimant holds an approved rate of drawback covering riflescope lenses under section 1313(a), title 19, United States Code. There is no difference in the unit values or rates of duty for each lens model. Therefore, the claimant wishes to list on the drawback entry only those import entries with model numbers corresponding to lens model numbers shown to have been used in the production of exported riflescopes. For example, if there were 100 model X lenses used in a particular production, the claimant believes it necessary only to identify a timely import entry covering model X lenses which could have been used in that particular production run. The rate of duty and the unit price for each particular model lens are the same for the past 2 years. However, because the claimant commingles like lenses, those customs officers believe that if the rate of exchange differs among entries, each drawback claim should list every entry covering those lenses upon which drawback is claimed, so that designation is made on a low-to-high basis as directed by section 22.4(f), Customs Regulations. The claimant states that this requirement will cause accounting problems and believes that 22.4(f) was not designed to cover currency fluctuation.

Law and analysis.—Section 22.4(f) of the regulations, requires in pertinent part:

> When identification is made against two or more lots of imported merchandise of different dutiable values or subject to different rates of duty, or against two or more lots of drawback products subject to different allowances of drawback, the drawback shall be based first upon the lot or lots of the lowest dutiable value, rate of duty, or drawback allowance, as the case may be, then upon the lot or lots of the next higher dutiable value, rate of duty or drawback allowance, and so on from lower to higher until all the lots have been accounted for * * *.

We assume that the imported lenses do not have individual serial numbers or other similar identification, but are identified only by

324-903 O - 80 - 4

model number. The operateiv words in that portion of section 22.4(f) cited are: "* * * merchandise of different dutiable values" and "* * * until all the lots have been accounted for * * *".

No doubt, fluctuations in monetary exchange affect the values of imported merchandise for purposes of determination of duties. It would be virtually impossible to prepare section 22.4(f) of the regulations to specifically cover every possible situation whereby the dutiable value of merchandise is or can be affected. Suffice it to say that we have consistently held that the principle of section 22.4(f) can be applied in any case where dutiable values vary or different lots of drawback products are subject to different drawback allowances, no matter what the cause of the variance or difference.

In this case, though not apparent it is assumed that the unit prices for each model lens are stated by the supplier in foreign currency. Due to fluctuations of the dollar value abroad, the prices paid for the lenses in dollars will vary. When prices paid in dollars vary, it follows that the amount of duty paid, which determines the amount of drawback due, will also vary. This is the situation in the case under study, and it falls squarely within the principle of section 22.4(f) of the regulations. To account for merchandise of different dutiable values requires the listing on the drawback entry every timely entry covering a particular lens model which appears in exported riflescopes upon which drawback is claimed to protect against overpayment of drawback.

Holding.—When fungible goods which are subject to different dutiable values because of currency fluctuation are commingled, identification for drawback under 1313(a) must be made on a low-to high basis as set out in section 22.4(f), C.R. This requires listing on the drawback entry every consumption entry which covers merchandise which could have been used in the exported articles.

(C.S.D. 80–133)

American Selling Price: Whether Imported and Domestic Footwear Are Similar if Made in Dissimilar Widths

Date: October 17, 1979
File: CLA-2:R:CV:MA
061200 C

Re Decision on application for further review of protest No. 1001–9–000553.

AREA DIRECTOR OF CUSTOMS,
New York, N.Y.

DEAR SIR: This protest was filed against your decision in the liquidation on October 20, 1978, of entry No. 78/313084, covering a shipment of ladies footwear manufactured in Taiwan.

This ruling concerns the applicability of the American selling price basis of appraisement to certain ladies footwear.

Facts.—The ladies footwear involved is classifiable under the provision for other footwear which is over 50 percent by weight of fibers and rubber or plastics with at least 10 percent by weight being rubber or plastics and having uppers of which not over 90 percent of the exterior surface area is rubber or plastics in item 700.60, Tariff Schedules of the United States (TSUS), and dutiable at the rate of 20 percent ad valorem.

Pursuant to schedule 7, part 1, subpart A, headnote 3(b), TSUS, this footwear was appraised on the American selling price of the domestically produced Oomphies "Original" which was $7 less 2 percent effective October 1, 1977.

The footwear involved was imported entirely in triple E widths. The protestant maintains that the ladies footwear in issue cannot be considered like or similar to the domestic prototype because the domestic prototype is not manufactured in triple E widths.

Issue.—Whether the imported footwear is legally similar to the domestic prototype for American selling price purposes.

Law and analysis.—For the purposes of determining similarity in American selling price cases, four tests have been used as guides: (1) Similarity of material, (2) commercial interchangeability, (3) adaptability to the same use, and (4) competitive character.

In order to be commercially interchangeable an article must be sold to the same class of purchasers as that which the domestic article is sold to. See *Mutual Supply Company* v. *United States*, 5 Cust. Ct. 614, R.D. 5062 (1940); *Albert F. Maurer & Company* v. *United States*, 47 Cust. Ct. 560, R.D. 10130 (1961); *A. Zerkowitz & Company* v. *United States*, 58 CCPA, 60, C.A.D. 1005 (1970). It is evident that an individual requiring a triple E width cannot substitute a shoe of narrower width for the triple E width.

The most important test in determining similarity in American selling price cases is the test of competitive character. Clearly, the imported shoes in triple E widths do not compete with the domestic prototype which is not produced in triple E widths.

Holding.—The ladies footwear in issue is not subject to appraisement on the American selling price of the domestically produced Oomphies "Original".

The protest should be allowed. Your file is returned.

(C.S.D. 80-134)

Entry: Special Manifest Procedure for Overcarried and Prematurely Discharged Merchandise

Date: October 18, 1979
File: ENT-1-01:R:E:E
306348 M
710814 M
711164 M

This ruling concerns the use of the special manifest procedure for overcarried merchandise and prematurely discharged merchandise.

Issue.—May overcarried merchandise or prematurely discharged merchandise transported to the manifested port under an immediate transportation entry, rather than under one of the two special manifest procedures, be included in the original entry summary filed at the manifested port?

Facts.—A district director of Customs, under the internal advice procedure, requests reconsideration of our letter of June 30, 1978, to him, and of legal determination 3550-06, which held that one of the two special manifest procedures mentioned in sections 4.34 and 18.10a of the Customs Regulations must be utilized for returning overcarried merchandise to the port of destination, if the importer wishes to include the overcarried merchandise in the original entry (now referred to as entry summary) and obtain the rate in effect applicable to the original entry summary. These two rulings applied to prematurely discharged merchandise as well.

Law and analysis.—19 U.S.C. 1315(a)(2), in pertinent part, reads as follows:

> Any article which is not subject to a quantitative or tariff-rate quota and which is covered by an entry for immediate transportation made at the port of original importation under section 1552 of this title, if entered for consumption at the port designated by the consignee, or his agent * * * shall be subject to the rate or rates in effect when the transportation entry was accepted at the port of original importation.

The District Director contends that the restriction concerning the use of the immediate transportation entry when filed at the port of original importation does not apply to overcarried merchandise because the immediate transportation entry would be filed at the port of discharge. In his opinion, the port of first importation for overcarried merchandise was the manifested port where the merchandise was carried, but inadvertently not discharged. In his opinion, the port of actual discharge is the second port of importation.

We find this interpretation of the port of original importation somewhat dubious. Moreover, the two rulings applied to prematurely discharged merchandise, as well as overcarried merchandise. Certainly even under the District Director's interpretation of the port of original importation, the port of actual discharge would be the port of original importation for prematurely discharged merchandise since such merchandise was discharged at a port before it ever reached the manifested port. Both overcarried merchandise and prematurely discharged merchandise have operationally been treated in the same manner because at the port of actual discharge it is often difficult to ascertain whether the merchandise was overcarried or prematurely discharged. Therefore, it would be confusing to permit an immediate transportation entry to be filed for returning overcarried merchandise to the manifested port for inclusion in the original entry summary and at the rate of duty applicable to the original entry summary and to refuse this privilege for prematurely discharged merchandise.

In addition, we conducted a survey of the nine Customs regions to ascertain their views in regard to requiring the use of one of the two special manifest procedures for returning overcarried or prematurely discharged merchandise to the manifested port if the importer wishes such merchandise to be included in the original entry summary and obtain the rate in effect applicable to the original entry summary. Such ruling was favorably received by the nine Customs regions.

A couple of the Customs regions, however, pointed out that because of the unfamiliarity of some of their Customs officials and some of the carriers in their region with the special manifest procedure mentioned in section 18.10a of the Customs Regulations, the carriers will often file an immediate transportation entry, when they meant to file a special manifest. If the District Director of Customs is satisfied that an immediate transportation entry was filed because of a clerical error, mistake of fact, or other inadvertence within the meaning of section 520(c)(1), Tariff Act of 1930, as amended (19 U.S.C. 1520(c)(1)), and this error, etc. was timely brought to his attention, he may permit the substitution of a special manifest for the immediate transportation entry.

We do not believe that the ignorance of this procedure will be a problem in the future because we plan to revise section 18.10a of the Customs Regulations so as to clearly set out in detail this procedure. Presently, this procedure is only set forth in detail in Customs Circular TRA-7-EV dated September 17, 1963.

Holding.—In summary, our ruling is the following:

1. Merchandise, whether overcarried or prematurely discharged, may be included in an entry summary for consumption already filed at the manifested port and subject to the rates applicable to that entry

summary only if returned under one of the two special manifest procedures, either the special manifest procedure specified in section 4.34 of the Customs Regulations, or the other one mentioned in section 18.10 of the Customs Regulations and set forth in Customs Circular TRA-7-EV dated September 7, 1963.

2. If instead of the special manifest procedure, overcarried or prematurely discharged merchandise is returned to the manifested port under an immediate transportation entry, such action shall accord the returned merchandise the same status as any other arrival of merchandise under an immediate transportation entry, unless the District Director is satisfied that the filing of the immediate transportation entry was done because of a clerical error, mistake of fact, or other inadvertence within the meaning of section 520(c)(1), Tariff Act of 1930, as amended (19 U.S.C. 1520(c)(1)).

(C.S.D. 80-135)

Carrier Control: Foreign-Owned and Foreign-Registered Truck Tractor Hauling Truck Trailer Between Points in the United States

Date: October 19, 1979
File: BOR-7-04-R:CD:C
104251 DR

This ruling concerns the use of a foreign-owned and foreign-registered truck tractor in the local traffic of the United States.

Issue.—Whether a foreign-owned and foreign-registered truck tractor may legally haul a truck trailer solely between points within the United States.

Facts.—A foreign-owned and foreign-registered truck tractor hauls a similarly owned and registered truck trailer with merchandise for the United States from Mexico to the United States. After arrival in the United States, the tractor detaches the trailer and returns to Mexico, leaving the trailer in the United States. A second tractor, also foreign owned and foreign registered (same owner as the first tractor) takes the trailer in tow and hauls it to various U.S. destinations for unlading.

Law and analysis.—A foreign truck tractor which arrives in the United States in international traffic with a foreign truck trailer in its tow, either empty or loaded, is considered to constitute a foreign truck, as that term is used in section 123.14 (a), (b), and (c)(1), Customs Regulations. Such a rig may transport merchandise between points in the United States while on a regularly scheduled trip if such transportation is directly incidental to the international schedule.

A foreign truck tractor which arrives in the United States with an American trailer laden with merchandise for the United States, or arriving with an empty American trailer or with no trailer for the purpose of taking out merchandise, is considered to be arriving in international traffic and may be admitted without formal entry or the payment of duty but may not engage in local traffic. If it arrives with a foreign trailer it would be considered as part of a truck (as prescribed in the foregoing) and may therefore engage in local traffic only to the same extent and under the same conditions that a foreign truck may engage in local traffic (123.14(c)).

Holding.—A foreign truck tractor which arrives in and departs from the United States as an integral part of a truck may be used to transport merchandise when directly incidental to a regularly scheduled trip (123.14(c)(1)). Otherwise, it may not be used to transport merchandise between points in the United States if it has not been entered through Customs into the United States and all applicable duties paid thereon. Any vehicle used in violation of the regulations shall be subject to forfeiture under the provisions of title 19, United States Code, section 1592 (123.14(d)).

(C.S.D. 80-136)

Vessels: Prohibition Against Gambling Devices on Board U.S.-Flag Vessel in International Waters

Date: October 19, 1979
File: VES-5-10-R:CD:C
104258 DR
104086

This ruling concerns the possession and use of gambling devices on American vessels.

Issue.—Whether gambling devices such as slot machines are permitted on board U.S.-flag vessel to be operated when the vessel is in international waters.

Law and analysis.—Section 5 of the act of January 2, 1951 (15 U.S.C. 1175), prohibits the use or possession of gambling devices within "the special maritime and territorial jurisdiction of the United States as defined in section 7 of title 18 of the United States Code." Section 7 defines "special maritime and territorial jurisdiction of the United States" as including "the high seas, * * * and any vessel * * * when such vessel is within the admiralty and maritime jurisdiction of the United States * * *."

American flag vessels are considered as being within the admiralty and maritime jurisdiction of the United States, whether on the high

seas or within territorial waters of a foreign country (*U.S.* v. *Flores*, 289 U.S. 137 (1933)).

Section 1(a) of the Act (15 U.S.C. 1171(a)) defines the term "gambling device" to mean:

> (1) Any so-called "slot machine" or any other machine or mechanical device an essential part of which is a drum or reel with insignia thereon, * * *.
>
> (2) Any other machine or mechanical device (including, but not limited to, roulette wheels and similar devices) designed and manufactured primarily for use in connection with gambling, * * *.

Holding.—It is unlawful to possess or use any gambling devices, such as slot machines, on board a U.S.-flag vessel in international waters, pursuant to section 1175 of title 15, and section 7 of title 18, United States Code.

(C.S.D. 80-137)

Drawback: Whether Drawback is Allowable on Valuable Waste Incurred in Manufacture

Date: October 22, 1979
File: DRA-1-R:CD:D NK
210988

Issue.—Whether drawback is allowable on the exportation of valuable waste incurred in the manufacture of an article.

Facts.—A manufacturer proposes to import steel slabs for use in the manufacture of rolled coils. The manufactured coils will not be exported but will be used in domestic consumption. However, the manufacturer wants to claim drawback on the exportation of a valuable waste byproduct which results from the manufacturing process for the coils.

Law and analysis.—The drawback law under section 1313(a), title 19, United States Code, and applicable regulations, authorizes the payment of drawback upon the exportation of articles manufactured or produced in the United States with the use of imported merchandise.

Some manufacturing processes result in the manufacture not only of the principal product but also one or more byproducts. An example of multiple byproducts is the processing of linseed to obtain linseed oil which results in the byproduct linseed cake. Drawback is allowable on exportation, in accordance with applicable regulations, of either the manufactured linseed oil or cake or both. This is because the drawback law also provides that "the drawback shall be distributed to the several products in accordance with their relative values at the time of separation."

However, waste is the residue or leftover merchandise incurred in the manufacture of something else rather than an article manufactured. Therefore, drawback is allowable on exports of byproducts, but not on exports of valuable wastes.

In the decision of the Customs Court in *Burgess Battery Co.* v. *United States*, 13 Cust. Ct. 37 (1944), the court considered a manufacturing process similar to the facts described above. American-made zinc sheets were exported to Canada and used in the manufacture of battery cups. Leftover trimmings of zinc referred to as "line scrap" was returned to the United States and claimed to be free of duty as American goods returned. The court upheld this claim because the residue line scrap was produced by a "process of segregation or elimination" rather than by a "process of manufacture or other means."

Although the decision in the court case concerned another provision of law, the manufacturing process described indirectly supports the Customs position that drawback is not allowable on exports of valuable waste. Under the facts presented in the present case, the waste is the residue from steel slabs used to manufacture something else (rolled coils) rather than an article manufactured.

The manufacturing requirement of the drawback law is not satisfied merely because residue waste has value. Accordingly, section 22.4(a) of the Customs Regulations provides, in part, that when recovered waste has a value and the drawback claim has not been limited to the quantity of imported duty paid merchandise appearing in the exported articles, the records kept by the manufacturer shall show the factor value of the imported duty-paid merchandise used and the factory value of waste in order that in the liquidation of the drawback entry the quantity of the imported duty-paid merchandise used may be reduced by the quantity thereof which the value of the waste will replace. This procedure was first brought into the Customs Regulations in 1937 and was in use for an indeterminate period prior thereto.

Holding.—Drawback is not allowable on exportation of valuable waste.

(C.S.D. 80-138)

Entry: Waiver of Production of Missing Documents by Liquidation of Entry

Date: October 22, 1979
File: ENT-1-01 R:E:E
711059 MK
711310 MK

This ruling concerns the question of liability under an entry bond

324-903 O - 80 - 5

for a missing document when the entry has been liquidated, and the question of when general liability under the entry bond is terminated.

Facts.—On occasion a customhouse broker posts a bond for a missing document, and the entry is liquidated prior to receipt of that document.

Issues.—(1) Does liquidation of the entry constitute a waiver of the production of the document and terminate liablility under the bond for its production?

(2) Does liability under an entry bond continue after an entry is liquidated?

Law and analysis.—Most missing documents are required in order to accurately classify and appraise the merchandise. Presumably, in the absence of such documents, the Customs officer who liquidates the entry resolves the classification or appraisement questions in favor of the Government, to protect the revenue. Thus, no purpose would be served in producing such documents after liquidation, insofar as Customs is concerned, and liquidation of the entry would constitute a waiver of the production of documents relating to classification or appraisement. It follows that liability on the entry bond for production of such missing documents would be terminated upon liquidation of the entry.

Customs terminates liability on an entry bond after expiration of the 2-year period set in section 521, Tariff Act of 1930, as amended (19 U.S.C. 1521). Under 19 U.S.C. 1521 an entry may be reliquidated within 2 years after the date of liquidation or last reliquidation if a Customs officer finds probable cause to believe that fraud is involved in the entry. The Customs Service considers the time limit set by 19 U.S.C. 1521 to be the last practical date of bond liability for duty due.

After expiration of that period, future bond liability is terminated. Of course, under section 113.3, Customs Regulations (19 CFR 113.3), the principal and surety on a terminated bond remain liable for any default that occurred before termination.

Therefore, during this period, Customs can enforce a demand for redelivery, which can generally be issued at any time before liquidation of the entry becomes final, under section 141.113, Customs Regulations (19 CFR 141.113). Bond liability during this period also continues for the production of missing documents required by other Government agencies whose laws or regulations Customs enforces.

Holding.—The liquidation of an entry constitutes a waiver for the production of a missing document relating to classification or appraisement of the merchandise, and terminates liability under the entry bond for production of such document. General liability on an entry

bond terminates after expiration of the 2-year period est in section 521, Tariff Act of 1930, as amended (19 U.S.C. 1521).

(C.S.D. 80-139)

Constructed Value: Validity of Cost of Materials in Absence of Contradictory Evidence

Date: April 14, 1980
File: CLA-2-RRUCV JV 061975

Re Decision on application for further review of protest No. 1001-8-015095, dated December 27, 1978.

AREA DIRECTOR OF CUSTOMS,
J. F. K. Airport,
Jamaica, N.Y.

DEAR SIR: This decision concerns the proper appraised values for certain linen goods imported from the Azores Islands. The merchandise was appraised and liquidated on the basis of its constructed value (sec. 402(d), Tariff Act of 1930, as amended), at the invoice price plus 12 percent to account for a change in the cost of materials between the time such materials were ordered and the time of manufacture and exportation of the final products to the United States.

Issue.—Whether the 12-percent advance over the entered values to account for a change in the cost of materials during the above passage of time due primarily to currency fluctuations is proper under statutory constructed value. The basis of appraisement is not in dispute.

Facts.—The operation in the Azores is a cut, make, and trim operation. Large bolts of raw fabric are purchased by the importer from a Czechoslovakian firm. Production of the fabric in that country is extremely slow and a single order is often filled by means of several shipments over the course of several months. Thus, in order to insure that the manufacturer of the imported linens will have suitable fabric by the time the production process is to commence, the importer must place orders with the fabric producer no later than 6 to 12 months in advance of the commencement of the operation in the Azores. Consequently, several months will pass between the time the fabric is ordered and the time the final products are manufactured and exported to the United States. The protestant contends that the proper basis for establishing the cost of materials is to take the actual price paid for the fabric, since that price represents the price at which suit-

able fabric could last have been purchased so that the purchase could be delivered by the time of commencing manufacture of the imported merchandise in the normal course of business.

Law and analysis.—Section 402(d)(1) provides for the cost of materials and fabrication or other processing of any kind employed in producing such or similar merchandise, at a time preceding the date of exportation of the merchandise undergoing appraisement, which would ordinarily permit the production of that particular merchandise in the ordinary course of business.

The Court of Customs and Patent Appeals in the case of *Charles Stockheimer et al.* v. *United States*, 44 CCPA 92, C.A.D. 642 (1957), held that cost of materials under the cost of production formula is to be ascertained as of the time when such materials were or could have been purchased for the manufacture of the imported merchandise. Thus, the cost is fixed with respect to a definite time, that is, at or prior to the date of manufacture of the imported merchandise. The court went on to state, at page 96,

> that this would necessarily entail ordering the materials at such a preceding time that they would be available long enough prior to the export date to permit manufacture in the normal manner.

This holding has since been extended to cover constructed value appraisements. See, for example, *Kaysons International Ltd.* v. *United States*, 66 Cust. Ct. 560, R.D. 11741 (1971).

It follows, therefore, that any increase by Customs in the value of the materials beyond the statutorily defined point in time due to currency fluctuation, inflation or other market forces would, as a matter of law, be erroneous. The Customs Court has recently ruled unfavorably with regard to Customs double conversion practices in connection with imported merchandise invoiced in dollars. In *C.B.S. Imports Corp.* v. *United States*, C.D. 4739 (1978), the court rejected the Customs Service's decision to convert the dollar value of merchandise into foreign currency at the rates which prevailed on the date of contract and to later reconvert the foreign currency into dollars at the rate prevailing on the date of exportation. When merchandise is invoiced in dollars, the price at which such or similar merchandise is sold does not change simply because of a rise or fall in the value of the dollar. In fact, the court found that a change in currency exchange rates does not automatically affect prices. Other factors, such as competition, economic conditions, and the nature of the merchandise itself all must be considered. Thus, it is clear that any presumptions that currency fluctuations or revaluations automatically increase prices and costs is erroneous.

While that case involved merchandise appraised on the basis of statutory export value, we believe that these same principles govern

in determining cost of materials under constructed value. In the instant case the price for the fabric is the invoice price as shown in the supplier's invoices. There is nothing in the record to suggest that this price is not reflective of the cost of the fabric on the last day on which it could have been purchased for use in the production of the imported merchandise in the ordinary course of business. Consequently, it is this price which is the proper basis for establishing the cost of materials under section 402(d).

On the question of proof, the Customs Court in *Kaysons, supra*, at page 566, declared that "it is insufficient for defendant (Government) to merely allege that the time at which the cost of materials was taken was inappropriate." In other words, where the importer comes forward with proof (e.g., supplier's invoices) regarding the cost of materials used in a transaction, the Customs Service should accept that cost for constructed value purposes unless there is information to the contrary.

Holding.—It is improper for Customs to increase the cost of materials under constructed value due to currency revaluation or other factors where the proofs establish that the actual price paid for those materials represents the price preceding the date of exportation of the merchandise undergoing appraisement, which would ordinarily permit the production of that particular merchandise in the ordinary course of business.

(C.S.D. 80-140)

Classification: Angel Figure Christmas Tree Ornament

Date: November 6, 1979
File: CLA-2:R:CV:MA
061500 c

Re Decision on application for further review of protest No. 4501-7-000065.

This protest was filed on September 22, 1977, against your decision in the liquidation on July 29, 1977, on entry No. 108509, dated June 13, 1977.

This ruling concerns the classification of an angel figure Christmas tree ornament.

Facts.—The merchandise, a product of Hong Kong, consists of a figure of an angel which appears to be a Christmas tree ornament. The figure stands about 4 inches high and is made of molded plastic. It has large wings, a halo, and a metal eyelet implanted in the halo. No feet or legs are visible because the angel's gown conceals the entire

lower half of the body. At the bottom of the gown are printed the words "Joy to the World" and "1977".

Issue.—Whether the angel figure is classifiable under the provision for dolls, in item 737.20 (currently 737.22), Tariff Schedules of the United States (TSUS), or is classifiable under the provision for Christmas tree ornaments of plastics, in item 772.95, TSUS.

Law and analysis.—The term "dolls" has been judicially construed to include those articles: (1) Similar to dolls used as children's playthings; (2) used for ornamental purposes; and/or (3) commonly referred to in the trade and commerce of the United States as dolls.

An examination of the sample shows that although it is made of plastic, it has the sculptured ceramic look typically associated with Hummel figurines.

The sample is not used as a child's plaything or for ornamental purposes. It is not known as a doll in the trade and commerce of the United States.

Holding.—The sample is classifiable under the provision for Christmas tree ornaments of plastics, in item 772.95, TSUS.

(C.S.D. 80-141)

Classification: Knit Textile Fabrics With Cut Pile Yarns

Date: December 4, 1979
File: CLA-2:R:CV:MC
055079 PR

Re: Decision on application for further review of protest No. 27047001245.

This protest is against your decision in the liquidation on May 6, 1977, of entry No. 915546, dated July 7, 1976, and entry No. 935213, dated September 3, 1976. Both entries concern the classification of certain knit textile fabrics.

Issue.—The merchandise is claimed to be classifiable under the provision for knit fabrics of manmade fibers, in item 345.50, Tariff Schedules of the United States (TSUS), with duty at the rate of 25 cents per pound plus 20 ad valorem. It was classified under the provision for pile fabrics of manmade fibers, in item 346.60, TSUS, with duty at the rate of 15 cents per pound plus 25 percent ad valorem.

The importer's representative has advanced two reasons for the merchandise to be classifiable under the provisions for knit fabrics. The first basis is that the merchandise is the same merchandise which has previously been ruled by the Customs Service to be classifiable in item 345.50, TSUS. The second basis is that the merchandise is, in

fact, a napped fabric and not a pile fabric. Thus, the issue presented is not only a question of fact, but also of the applicability of a prior Customs Service ruling.

Facts.—On August 12, 1976, Headquarters, U.S. Customs Service, responded to internal advice request No. 36/76, 044860, dated August 12, 1976, which concerned the tariff classification of certain warp knit fabrics. The fabrics which were the subject of that ruling were described as warp knits of a tricot construction with floats of various lengths. The floats were stated to be uncut. A pile-like surface effect was produced on the fabric by mechanical finishing.

The basis for the description contained in I.A. 36/76 is a memorandum from a Customs Service laboratory to the national import specialist. That memorandum contained the following description of the samples.

> Samples A through H are two bar fabrics which have either a loop raised, a locknit, or a satin construction. In each, the back bar produces a single bar construction, while the front produces underlaps over a minimum of two needle spaces. These underlaps form floats which are on the technical back of the fabrics. Since the back bar produces a single bar fabric, the fabric will remain intact if the front bar were removed. Therefore, we are of the opinion that these samples are pile fabrics in which the pile was inserted during the knitting.

That memorandum was written prior to the decision in *Tilton Textile Corp.* v. *United States*, 77 Cust. Ct. 27, C.D. 4670 (1976), *aff'd* 65 CCPA 18 C.A.D. 1199 (1977), which ruled that in order to be classifiable as a pile fabric, the fabric must either have a raised pile projecting from the surface of that fabric or not have any commercial use other than to be made into a pile fabric. This is contrary to the practice which Customs had before *Tilton* of classifying certain uncut fabrics, such as uncut corduroys and uncut velvets, as unfinished pile fabrics.

When the subject protest file reached headquarters, no samples were included. In an effort to obtain samples, it was discovered that the Customs laboratory in Los Angeles had retained samples from the shipments involved. To determine the correctness of the assertion that the instant merchandise is the same merchandise as that which was the subject of our ruling in I.A. 36/76, the samples which were retained in that internal advice file were forwarded to the Los Angeles laboratory for comparison with their retained samples. The examination by the Los Angeles laboratory revealed that of the samples labeled A through H, all were tricot knit fabrics with pile yarns inserted, and that five did not have the pile yarns cut while three did have the pile yarns cut. The merchandise which is the subject of the instant protest was determined to be the same as the three samples of fabrics which had their pile (float) yarns cut. With this information in hand, mem-

bers of the Classification and Value Division of this headquarters reexamined the samples and the accuracy of the examination by the Los Angeles laboratory was readily apparent.

Law, analysis and holding.—Based on the laboratory examination and our own observation of swatches of the imported fabric, it is apparent that the float yarns on the imported merchandise have been cut, creating pile fabrics. However, such a conclusion is not dispositive of the protest since the Customs Service, in I.A. 36/76, apparently classified the same fabrics under the provisions for knit fabrics.

I.A. 36/76 specifically held that such fabrics were not pile fabrics. In view of that holding and the fact that the merchandise which was the subject of I.A. 36/76 was manufactured by the same company as the merchandise which is the subject of the instant protest, the Customs Service believes that its own mistake of fact should not prejudice the rights of the parties which were directly involved with I.A. 36/76. Accordingly, you are hereby directed to grant the instant protest.

Effect on prior rulings.—The Customs Service ruling on the request for internal advice, No. 36/76, dated August 12, 1976, file 044860, which has now been determined to be predicated on inaccurate information, is hereby modified to reflect the information contained above and that fabrics as represented by the swatches which have cut float yarns (sample B, C, and E) are classifiable in item 346.60, TSUS. All entries made after the date of this ruling, covering the merchandise which was the subject of I.A. 36/76, will be classified in accordance with our response to that internal advice request, as modified by this ruling.

(C.S.D. 80-142)

Export Value: Section 402(b), Tariff Act of 1930, as Amended; Dutiability of Quota Charge

Date: December 11, 1979
File: R:CV:V RP
061510

To: Port Director of Customs, Atlanta, Ga.
From: Director, Classification and Value Division.
Subject: Request for internal advice No. 154/79, entry of certain wearing apparel from India.

Issue.—Where a foreign manufacturer-exporter is required to invoice the merchandise in question at a price higher than the original contract price in order to secure the necessary quota from the foreign government, which price, if any, represents export value under section 402(b), Tariff Act of 1930, as amended?

Facts.—The subject of the above-referenced request for internal advice concerns importations of wearing apparel from India.

It appears that the Indian Government has adopted a quota allocation system under which the Government sets certain price levels for obtaining quota and has reserved significant portions of the quota for wearing apparel at prices in excess of Government-set levels. The importer in question has contracted with the foreign manufacturers and exporters to buy the subject merchandise at prices which are often below the Government-set level for obtaining quota. In order to obtain the necessary quota, the exporters have been forced to raise the unit price of the wearing apparel to the Government level. Therefore, the higher prices which appear on commercial invoices do not, in most instances, accurately reflect the lower contract selling prices.

It is the position of the importer that the actual contract price represents the export value of the wearing apparel, rather than the higher invoice price used by the manufacturer to secure quota. It is contended that the amount by which the invoice price exceeds the contract price represents the amount which is refunded or rebated to the importer by the foreign manufacturer-exporter.

Due to strict currency controls imposed by the Government of India, the rebating is accomplished by reducing the invoice prices of styles not subject to the quota price system below the contract prices originally negotiated between the parties, or by rebating amounts to the importer's agent.

Law and analysis.—In *United States* v. *Getz Bros. & Co., et. al.*, 55 CCPA 11, the Court of Customs and Patent Appeals considered the question of whether Japanese quota restrictions on the exportation of plywood affected the dutiable value of the merchandise. The court stated:

> Such charges for a quota, which sometimes occurred, formed no part of purchase price of the plywood for export, nor did it, in our view, within the statute, form any part of the cost, charges and expenses incident to placing the merchandise in condition packed ready for shipment to the United States. Such quota charges or premiums clearly occurred after the goods had achieved this status.

In two previous rulings (internal advice No. 138/76 and ORR letter ruling 74-400266), headquarters clarified its position in light of *Getz* and held that the quota charge is not dutiable even where the expense of paying the quota charge is actually passed on to the importer and is part of his cost of obtaining the goods, so long as the manufacturer freely offers the merchandise at a price which does not include a quota charge when such charge is not incurred by him.

324-903 O - 80 - 6

The existence of a quota limitation does not defeat the requirement of a freely offered price, since there is no arbitrary exclusion of certain purchasers or classes of purchasers from buying from the seller. *United States* v. *Getz, Bros. & Co., et al., supra.*

We note, however, that when a manufacturer sells merchandise subject to quota without having expended his quota allotment, yet passes a quota charge on to the importer, that charge is dutiable. In such a case, the merchandise is not freely offered to everyone at a price that does not include the quota charge.

In the case before us, the record indicates that the foreign supplier is not passing on a quota charge to the importer without having expended his quota allotment. It appears that the merchandise is offered for sale at prices which do not include the quota charge.

Holding.—Therefore, we are in agreement with the Chief, Duty Assessment Branch, New York Seaport, that in this particular case, the quota charge does not form part of dutiable value, and that the actual lower contract selling price represents export value, rather than the higher quota price which the importer was obligated to pay in assisting the foreign supplier to acquire the necessary quota.

It should be noted that in those instances where a rebate is paid to the importer by means of price reductions for other merchandise to be imported into the United States, it is incumbent upon the importer, at the time of entry of this other merchandise, to inform Customs of the rebated amounts and the corresponding reduction in prices. Failure to disclose all elements of value regarding the transactions may result in the initiation of penalty proceedings.

(C.S.D. 80–143)

Vessel Repairs: Dutiability of Expenses in Construction of One Vessel from Midbody of Another Vessel; 19 U.S.C. 1466

Date: December 12, 1979
File: VES–13–18–RRUCDC
104319 JM

Your letter dated October 19, 1979 (VES–13–18–0:C:L: BA 1j), requested a ruling on a petition filed under section 4.14(k), Customs Regulations, for relief from duty under 19 U.S.C. 1466, on the cost of repairs to the (vessel No. 2), vessel repair entry No. 171819, dated April 5, 1979.

The record shows that the (vessel No. 1) was sold to (foreign company), Kobe, Japan; that the vessel's document was surrendered; that the bow and stem were removed and scrapped; that the midbody

was used in the construction of the (vessel No. 2), and that a new official number was issued to the resulting vessel by the U.S. Coast Guard. The Coast Guard has informed us that the (vessel No. 2), official No. 594073, was built in 1978, in Japan; that the vessel was issued Permanent Register 35 on June 13, 1978; and that its home port is listed as Wilmington, Del. (Person's name) of (domestic company) has informed us that the first arrival of the (vessel No. 2) in the United States was on April 5, 1979.

Vessel repair entry No. 171819 covers foreign repairs to the vessel between the date it was documented as a vessel of the United States and the date the vessel first entered the United States. In a letter dated July 26, 1979, you furnished (domestic company) a copy of Customs form 226 with notations to reflect the tentative liquidation of this entry. By letters dated September 28 and October 1, 1979 (domestic company), requested review of your decision as provided by section 4.14(k), Customs Regulations.

We have reviewed the entire file on this matter and agree with your proposed liquidation with the exception of items as listed in comments below:

Comment 1

Items 9, 10, and 11 cover labor and/or crane service to either lade or to devan and distribute ships stores and parts removed from the former (vessel No. 1).

Item 259 covers labor and crane service to lade, devan, and store five vans containing stewards stores and lashing gears from sources other than the former vessel.

Item 78 covers labor and forklift to devan and lade miscellaneous parts from three containers.

Item 17 covers labor and a forklift truck for devaning/stuffing work to make inventory prior to sending articles to Oakland.

Item 67 covers labor for carrying ships stores (food and provisions) from a container to the ship.

The above items are considered in the nature of transportation charges. Other items which cover transportation charges are item 12 (drying of vans between PC-1 and MHI) and item 111, which has launch hire shown as a separate charge.

In CIE 970/60 we followed the ruling of the Customs Court (C.D. 1836) which held that the cost of transportation of workers and materials is not subject to duty under the vessel repair statute. Accordingly, the transportation charges as stated in the preceding paragraph, including hire shown as a separate charge on the invoice for item 111, are not costs of repairs and are not subject to duty under 19 U.S.C. 1466.

We note that item 42 covers the delivery of an accumulator cylinder which would appear to be in the nature of transportation charges. Since the invoice covering this item is in Japanese and we are unable to separate dutiable and nondutiable charges, we agree with your liquidating this item as dutiable.

Comment 2

Item 14 covers labor and material for a rack for crane parts.

Item 59 covers labor and materials to construct a shelf and metal cage.

Item 62 covers construction of television stand in officers' room.

Item 63 covers the construction of steel work benches.

Item 64 covers installation of lug-type pad-eye to be welded to hatch cover and regular type pad-eye welded to hatch coaming.

The above items appear to be permanent additions or fittings to the hull of the vessel rather than equipment of or repairs to the vessel.

In an opinion of the Attorney General, which quoted the Naval Board of Construction, the term "equipment" of a vessel was defined as "any portable thing that is used for, or provided in, preparing a vessel, whose hull is already finished, for service" (27 O.A.G. 228 (1909)). That opinion went on to say that the term "addition to the hull" or "fittings to the hull" (in contradistinction to "equipment," or "repairs") is any permanent thing attached to the hull which would remain on board were the vessel to be laid up for a long period.

Acting on a similar matter in *United States* v. *Admiral Orient Line*, 19 C.C.P.A. 137 (1930), the Court of Customs and Patent Appeals held that the installation of swimming tanks on a vessel was an alteration and therefore not subject to the provisions of section 1466. In *Otte* v. *United States*, 7 C.C.P.A. 166 (1916), the Court of Customs and Patent Appeals held that two elements must be present in order that an article may be regarded as an addition or fitting to the hull, rather than merely equipment of or repairs to the vessel. The two elements are that the article be permanent and that the article be essential to the successful operation of the vessel.

We believe items 14, 59, 62, 63, and 64 are permanent additions or fittings to the hull of the vessel and thus not dutiable under 19 U.S.C. 1466.

Comment 3

Items 24, 43, 57, 77 cover charges for chemical analysis of fuel oil supplied to the vessel.

Item 15 covers oil boom-deployment/recovery/oil fence. (A job order dated July 23, 1978, and other documents in the background file indicate this item covers an oil boom deployed around the vessel while bunkering).

The above items are a part of the vessel's fuel costs not related to repairs and as such are not subject to duty under 19 U.S.C. 1466.

Comment 4

Item 32 covers the purchase of 40 gallons of Gamlem Electrical Solvent for cleaning bilge. There is no evidence that this solvent was purchased for use in effecting repairs.

In C.I.E. 196/60, we held that sulphuric acid "purchased to be used by the crew in order to remove scales from the evaporator of the vessel" constituted a consumable supply, and accordingly not subject to duty under the vessel repair statute.

We believe item 32 is a consumable supply not subject to duty under 19 U.S.C. 1466.

Comment 5

Item 18 covers a sanitary inspection fee for radio pratique paid to Yokohama Quarantine Office.

Items 44 and 70 cover condition surveys by the American Bureau of Shipping. Documents in the file indicate pistons were pulled for condition survey.

In C.S.D. 79-278, published in the CUSTOMS BULLETIN (vol. 13, No. 32) on August 8, 1979, we stated:

> Where a survey is undertaken to meet the specific requirements of a governmental entity, classification society, insurance carrier, etc., the cost is not dutiable even when dutiable repairs are effected as a result thereof. Where an inspection or survey is conducted merely to ascertain the extent of damages sustained or where repairs are deemed necessary, the costs are dutiable as part of the repairs which are accomplished per the holding in CIE 429/61.

It appears the above inspections/surveys were undertaken to meet the specific requirements of a governmental entity or classification society and are not dutiable.

Comment 6

Items 83 through 95 and items 118 through 254 are shown on the vessel repair entry as "Guarantee Work—No Cost Items." The petitioner claims these items come under the 12-month warranty period for the new vessel, that the repairs were made without charge, and that these items are not dutiable.

ORR Ruling 23-69 held in relevant part as follows:

> In the case of a new vessel on its first voyage, it is reasonable to assume that new equipment covered by a warranty is seaworthy for a round voyage, foreign and return. Unless the evidence indicates some other cause, failure of such equipment may be considered a casualty within the meaning of section 258(1).

The legislative intent of the 50 percent ad valorem duty under 19 U.S.C. 1466 on the cost of ship repairs made in foreign countries

is to protect American shipyards and the American manufacturer of ship parts. (33 O.A.G. 432 (1923)). In determining that the repairs discussed in ORR Ruling 23–69 were necessitated by a casualty within the meaning of the vessel repair statute, we found that the vessel was built in the United States, that the equipment concerned was new and covered by a warranty and that the vessel was on its first voyage. In another decision, abstracted in T.D. 71–83, we broadened the one-round voyage rule to cover parts of a vessel which have been repaired and/or serviced just prior to a voyage from a U.S. port * * *.

We believe an essential element of the one-round voyage rule is the fact that the vessel was built in the United States if a new vessel on its first voyage or, if other than a new vessel, that the vessel was repaired and/or serviced in the United States. To extend the "one-round voyage" rule to cover warranty items of a foreign shipyard would be contrary to the purpose of the statute, i.e., protection of American shipyards and the manufacturer of American parts.

Since the vessel was subject to the statute and no further relief is provided for therein, remission of duty on items 83 through 95 and items 118 through 254 is denied.

Item 132 covers transportation expenses and is not subject to duty for the reasons stated in comment 1 above.

(C.S.D. 80–144)

Marking: Acceptability of UK as Country-of-Origin Marking on Product Made in England

Date: December 12, 1979
File: MAR-2-05-RRUEE
711829 HS

Internal Advice Request No. 195/79 was initiated by (name of company). It involves the marking of certain gas pressure cylinders that are manufactured in England.

Issue.—(1) Whether the abbreviation UK located between other letters and numbers as part of a code that is die stamped on the cylinders is a sufficient indication of England as the country of origin to meet marking requirements.

(2) If not, whether the cylinders may be excepted from marking under the provisions of either section 304(a)(3) (G) or (H), Tariff Act of 1930, as amended (19 U.S.C. 1304(a)(3) (G) or (H)).

(3) Whether a district director has the authority to require that the cylinders be die stamped.

Facts.—Seamless steel cylinders which are intended to contain

gaseous materials under high pressure are manufactured in England and imported into the United States in empty condition. After importation the cylinders are sold by the importer to professional welders and other professional entities.

As imported, the cylinders bear a die stamped serial number required by the Department of Transportation (DOT). In this serial number, between other letters and numbers, appear the letters UK. No other marking appears. Upon the sale of the cylinders to a specific customer, each cylinder is final painted to that purchaser's specifications. Final painting would conceal or permanently obliterate any marking other than die stamping already on the cylinder.

Final painting cannot occur prior to importation. Because the customer is not known prior to the importation of the cylinders, the customer's final painting specifications cannot be known before importation. Also, severe paint damage would result to any cylinder which has been final painted prior to importation.

Each cylinder is required to be inspected by the DOT, and the report of the inspection is set forth on DOT form 5205A. The serial number required by the DOT is used to relate each cylinder to its inspection report on the form. DOT regulations require a copy of each completed report to be submitted by the DOT certifying inspector to the manufacturer, the purchaser and the Bureau of Explosives. While DOT regulations do not appear to require a copy of the inspection report to be provided to the ultimate purchasers of the cylinders, the importer, in this case, voluntarily provides each of his customers with a copy of complete inspection reports pertaining to the serially numbered cylinders which they have purchased. Each form 5205A identifies the country of origin of the cylinders as England.

Law and analysis.—(1) Section 304(a), Tariff Act of 1930, as amended (19 U.S.C. 1304(a)), provides that articles of foreign origin imported into the United States be legibly and conspicuously marked to indicate the English name of the country of origin to an ultimate purchaser in the United States. The Secretary of the Treasury has the authority to determine whether certain words, phrases, or abbreviations will be acceptable as the English name. In ORR Ruling 74/0177, we have ruled that "Made in U.K." is an acceptable marking for a product made in England.

However, in this case the language "Made in" does not precede "UK" and "UK" is located between other letters and numbers. It would be difficult to associate UK in this context as standing for the country of origin. The intent of requiring only certain words, phrases, or abbreviations as country-of-origin marking is to insure that the marking will give the ultimate purchaser definite and reliable information as to the exact country of origin without the need for

speculation or interpretation (*American Burtonizing Co.* v. *United States* 13 Ct. Cust. Appls. 654).

Even if the marking in this case is understood by a particular industry, which consists of the ultimate purchasers of the cylinders, by interpreting a code, the marking would not meet the purpose of the marking requirements to give definite information without the need for interpretation.

Obviously, providing a copy of DOT form 5205A to an ultimate purchaser when a cylinder is sold does not meet the marking requirements as the DOT form is neither part of the cylinder itself nor permantly attached to the cylinder.

(2) The petition seeks an exception from the marking requirements on two bases. First, exception is sought under 19 U.S.C. 1304(a)(3)(G) and section 134.32(g), Customs Regulations, which allow an exception for articles that are to be processed in the United States by the importer or for his account otherwise than for the purpose of concealing the origin of such article and in such manner that any mark would necessarily be obliterated, destroyed, or permanently concealed.

Section 134.36(a), Customs Regulations, states that this exception will not apply if there is a reasonable method of marking which will not be obliterated, destroyed, or permanently concealed by such processing.

The petitioner contends that the exception in this case is not precluded by section 134.36(a). He contends that apart from die stamping there is no other reasonable method of marking * * *. We are of the opinion that section 134.36(a) does preclude the 19 U.S.C. 1304(a)(3)(G) exception. That section clearly states that the exception would be granted if any mark contemplated by this section would necessarily be obliterated, destroyed, or permanently concealed. Die sinking, certainly a mark contemplated by the marking laws and regulations, as it is specifically suggested in section 134.41, Customs Regulations, for marking metal articles, would not be concealed by final painting, as evidenced by the fact that the code which was die stamped on the cylinders prior to final painting is not concealed by the painting.

The other exception that the petitioner seeks is that set forth in 19 U.S.C. 1304(a)(3)(H) and section 134.32(h), Customs Regulations. Under this exception, marking would not be required if an utlimate purchaser, by reason of the character of such article of by reason of the circumstances of its importation, necessarily knows the country of origin of such article even though it is not marked to indicate its origin.

The petitioner contends that the ultimate purchasers are specifically knowledgeable with respect to the meaning of the coding and must, therefore, necessarily know the country of origin of their cylinders.

The petitioner also states that the DOT inspector's reports that accompany the cylinders contain the name of the country of origin of the cylinders and that this document is in fact reviewed by the purchaser.

Even if we accepted these contentions, they would not be determinative of whether a 19 U.S.C. 1304(a)(3)(H) exception would be granted. It has been Customs policy generally to only grant such exceptions when there is a two party one-step transaction between an importer and his foreign supplier with the importer also being the ultimate purchaser (*U.S. Wolfson Bros.* v. *United States* 52 Cust. Ct. 86). Direct contact between the purchaser and manufacturer insuring that the order will be filled only with articles manufactured in a named country is also generally required.

In this case, the ultimate purchasers and the importer are not the same party, and there is no direct contact between ultimate purchasers and the manufacturer. There is also no assurance that the cylinders will only be manufactured in England; in fact, cylinders similar to the ones in question are manufactured in many foreign countries. Accordingly, an exception from marking cannot be granted for the cylinders under 19 U.S.C. 1304(a)(3)(H).

(3) The petitioner's final argument is that 19 U.S.C. 1304 and part 134, Customs Regulations, do not authorize the district director's requirement that the cylinders be marked by die stamping.

The petitioner bases his argument on sections 134.41 and 134.42 of the Customs Regulations. Section 134.41 states that definite methods of marking are prescribed only for articles provided for in 134.43 and for articles which are the object of special rulings by the Commissioner of Customs. Section 134.42 provides that marking merchandise by specific methods may be required by the Commissioner of Customs, and that notices of such rulings shall be published in the Federal Register and the CUSTOMS BULLETIN.

It is our opinion that these sections do not preclude Customs from requiring a definite method of marking for a specific article when the method is the only way that the country of origin may be marked on the article legibly, indelibly, and permanently. Section 134.41 precludes Customs from prescribing a definite method of marking only when other methods would meet the statutory requirements.

The petitioner, in this case, admits that die stamping is the only method of marking that will legibly and indelibly remain on the cylinders after final painting. As we have established in the discussion of the second issue that die stamping is a reasonable method of marking, it is our opinion that the district may require die stamping in this case.

Holding.—The abbreviation UK, located between other letters

and numbers as part of a code that is die stamped on cylinders, is not sufficient indication of England as the country of origin as it requires interpretation by the ultimate pruchasers. The cylinders may not be excepted from marking under 19 U.S.C. 1304(a)(3)(G), as die stamping is a mark contemplated by the marking requirements, and would not be concealed by further processing performed in the United States. The cylinders also are not excepted from marking under 19 U.S.C. 1304(a)(3)(H), as the ultimate purchasers do not have direct contact with the cylinder's manufacturer insuring that the cylinders will be manufactured only in England and there is a third party involved in the transaction other than the manufacturer and importer/purchaser. Finally the district director has the authority to require the cylinders to be die stamped because die stamping is the only reasonable method of marking which will meet country of origin marking requirements.

(C.S.D. 80-145)

Classification: Trademark Labels, Edging, Belt Loops, and Patch Pockets on Cotton Jeans; Ornamentation

Date: December 13, 1979
File: CLA-2:R:CV:MC
061646 BB

This ruling is in response to request for internal advice No. 212/79 concerning the classification of cotton jeans (your reference S:C: DVIII-75-570).

Facts.—Two samples are submitted. Style 98902 is a pair of jeans stated to be of 100-percent cotton. The jeans have a fly front with zippered snap closure, six belt loops, two front slash pockets, a coin pocket above the right front slash pocket and two rear patch pockets. A label of simulated leather, bearing a likeness of the skull of a longhorn steer and the words (designation), in script lettering, has been attached at the waistband.

A metal label, approximately 1¾ inches by ¼ inch in size, bearing the words (designation) in plain block lettering, has been riveted to the upper right hand corner of the right rear patch pocket. The label has been shellacked to create an antique gold finish. A narrow folded strip of contrasting material has been sewn along the top of the coin pocket in such a way that approximately one-fourth inch of this material is visible as an edging.

The belt loops are apparently constructed as follows. One piece of noncontrasting fabric is folded around a strip of contrasting fabric.

The edges of the noncontrasting fabric do not meet, so that the contrasting fabric insert is visible as a verticle strip down the center of the belt loop. The two rear patch pockets are constructed as follows. Three pieces of noncontrasting fabric are cut in such a way that when aligned to form a pocket, two V-shaped gaps are created in the center of the pocket. A strip of contrasting fabric is sewn beneath the three strips, joining the top and bottom strips and completing the pocket by filling the gaps.

Style 98903 is also a pair of jeans stated to be 100-percent cotton. These jeans differ from style 98902 in that they have five belt loops that do not have fabric inserts, there is no edging along the front coin pocket, the rear patch pockets are not constructed with gaps, but rather have top flaps with dual snap closures, and the metal label riveted to the rear patch pocket has a silver rather than an antique gold finish.

Issue.—Whether the submitted samples are ornamented for tariff purposes.

Law and analysis.—In order to constitute ornamentation for tariff purposes a feature must both be listed as a form of ornamentation in schedule 3, headnote 3, Tariff Schedules of the United States (TSUS), and serve a primarily decorative rather than utilitarian function. See *Blairmoor Knitwear Corp.* v. *United States*, 60 Cust. Ct. 388, C.D. 3396 (1968).

Schedule 3, headnote 3, TSUS, provides that an article of textile material can be ornamented with, among other things, edging, textile fabric, and ornaments. Turning first to the trademark labels attached to the submitted samples, Customs has ruled that both metal and textile trademark labels fall within the purview of headnote 3, and that the identification of a manufacturer, by itself, is not considered a primarily utilitarian function. Therefore, such labels normally constitute ornamentation. However, an exception has been carved from this general rule. Relatively small, rectangular-shaped identifying labels containing only plain writing or plain block printing in an orderly arrangement, applied to garments in locations where such labels are visible during normal wear of the garments are not considered ornamentation.

This exception has been narrowly construed. Customs has repeatedly ruled that anything done to a label which is obviously meant to enhance the appearance of the label and, consequently, the garment upon which it appears, may cause the label to constitute ornamentation. For example, the use of varying sized letters, of stylized letters, of designs, or of decorative borders on a label, may constitute ornamentation.

The labels bearing the longhorn steer skull design which are attached to the waistband of these jeans are not considered ornamentation. The labels are made from what is apparently a coated or filled textile fabric and do not fall within the narrow label exception described above because of the skull design. However, because the labels are attached to the waistbands, and both garments have belt loops, Customs takes the position that the jeans would usually be worn with belts which would cover the labels. Features not visible during normal wear of the garment are not primarily decorative and, therefore, do not constitute ornamentation.

The metal labels attached to the patch pockets of these jeans are also not ornamentation. Metal labels have been held to be ornaments within the meaning of headnote 3. See Headquarters Ruling letter (HRL) 060436 dated August 16, 1979. However, the exception from the general rule of ornamentation described above applies equally to metal and textile labels. See HRL 052880 dated January 25, 1978. Both metal labels are relatively small and essentially rectangular in shape. Both labels contain only plain block letters in an orderly arrangement. All of the lettering on the labels is the same size and neither label contains a design or a decorative border. Therefore, both labels fall within the ornamentation exception.

The only difference between these metal labels is that one has silver finish while the other has a duller, antique gold finish. We realize that there is language in HRL 053880 (supra) to the effect that metal labels which are brightly colored or finished in a manner which is intended to catch a person's attention may constitute ornamentation. However, on inspection of the subject labels, and given the fact that both labels meet all of the criteria to fall within the narrow exception from ornamentation, we do not believe the slightly brighter finish of the silver label provides an adequate basis for distinguishing it from the antique gold label, for purposes of ornamentation.

The edging that is attached to the top of the front coin pocket on style 98902 also does not constitute ornamentation. Customs has held that piping less than one-quarter inch wide that is sewn in a seam along the edge of a pocket is not ornamentation. See HRL TC 471.3 dated November 5, 1962. The rationale for this position is that the piping reinforces an area that is subject to wear and stress. The subject edging is less than one-quarter inch wide and, while not sewn in a seam, does serve to reinforce the pocket edge. Therefore, we consider this edging primarily functional.

The belt loops on style 98902 do not constitute ornamentation solely because Customs has a uniform and established practice of not considering this type of construction for belt loops ornamentation. The patch pockets on style 98902, on the other hand, do constitute

ornamentation. Pockets are functional. However, the pockets on style 98902 are complete without the center strip of noncontrasting fabric. The top and bottom strips of noncontrasting fabric are joined together by the piece of contrasting fabric to form a finished pocket. The center strip of noncontrasting fabric is simply an overlay which creates the decorative V-shaped gaps. This overlay of textile fabric is primarily decorative and constitutes ornamentation.

Holding.—Accordingly, style 98902 of the submitted jeans is ornamented because of the construction of its patch pocket. These jeans are properly classifiable under the provision for other men's or boys' wearing apparel, ornamented: of cotton, in item 380.00, TSUS, dutiable, if a product of Hong Kong, at the column 1 rate of 35 percent ad valorem. Style 98903 of the submitted jeans is not ornamented. These jeans are properly classifiable under the provision for other men's or boys' wearing apparel, not ornamented: of cotton, not knit, other, in item 380.39, TSUS, dutiable, if a product of Hong Kong, at the column 1 rate of 16.5 percent ad valorem.

(C.S.D. 80-146)

Classification: Footwear With Exteriors Partially Covered With Leather

Date: December 17, 1979
File: CLA-2:R:CV:MA
054915 c

Re Decision on application for further review of protest No. 27047001311.

District Director of Customs,
Los Angeles, Calif.

Dear Sir: This protest was filed against your decision in the liquidation on May 13, 1977, of entry No. 269244 dated July 29, 1976, covering a shipment of footwear manufactured in the Republic of Korea.

This ruling concerns the tariff classification of footwear having uppers the exterior surface area of which are partially covered with leather.

Facts.—The footwear in issue, style Nos. 98630, 98633, and 98689, was entered under the provisions for leather footwear in items 700.35 and 700.45, Tariff Schedules of the United States (TSUS), with duty at the rate of 8.5 and 10 percent ad valorem respectively.

A Customs Form 28, dated September 9, 1976, requesting samples of the footwear in issue was sent to the protestant. We have no record

of receiving any samples in response to that request. There is no record of a laboratory report conducted on any shoes which can be identified with the subject entry.

In the absence of samples the footwear was classified upon liquidation under the provision for other footwear which is over 50 percent by weight of fibers and rubber or plastics with at least 10 percent by weight being rubber or plastics and having uppers of which not over 90 percent of the exterior surface area is rubber or plastics, in item 700.60, TSUS, and dutiable at the rate of 20 percent ad valorem.

Pursuant to schedule 7, part 1, subpart A, headnote 3(b), TSUS, the footwear was appraised on the American selling price of the domestically produced Uniroyal Jaguar which was $8.50 less 2 percent.

The protestant maintains that classification of the footwear under item 700.60, TSUS, is precluded inasmuch as leather occupied over 50 percent of the exterior surface area of the footwear in issue.

On March 30, 1978, protestant forwarded samples of stock Nos. W98633 and W98630 which at that time were stated to be samples of two of the three styles in issue. The two stock numbers listed appeared on the entry documents. However, the samples submitted cannot with certainty be identified with the shipment in issue.

A laboratory analysis of the two sample shoes was conducted on May 4, 1978, by the U.S. Customs Laboratory in Washington, D.C. That analysis showed that leather covered 46.9 percent of the exterior surface area of the upper of style W98630 and 50.1 percent of the exterior surface area of the upper of style W98633.

The protestant has submitted the results of a laboratory analysis conducted on styles W98630 and W98689, by a private testing laboratory.

Those tests showed that leather covered 55.56 percent of the exterior surface area of the upper of style W98689 and 52.17 percent of the exterior surface area of the upper of style W98630.

The protestant claims that in contravention of section 152.2, Customs Regulations (19 CFR 152.2) it had no notice that a change in classification and appraisement had taken place until they received a liquidation notice and a bill dated, May 13, 1977, for increased duties.

The protestant states that the U.S. Customs Service violated section 152.24(c), Customs Regulations (19 CFR 152.24(c)) in the following manner:

> (1) Customs did not inform the importer of an ASP finding pursuant to section 152.24(c)(3), Customs Regulations (19 CFR 152.24(c)(3)).
>
> (2) The importer was not afforded the opportunity to examine samples of the footwear submitted by domestic producers which were utilized in arriving at the ASP determination pursuant to section 152.24(c)(4) Customs Regulations (19 CFR 152.24(c)(4)).

(3) Due to the failure of the Customs Service to notify the importer of its ASP determination, the importer was deprived of its right to file an internal advice request disputing the ASP appraisement pursuant to section 152.24(c)(5), Customs Regulations (19 CFR 152.24(c)(5)).

The protestant challenges the applicability of an American selling price by questioning whether the domestic prototype was freely offered.

The protestant claims that any presumption of correctness attaching to the action of the Customs officer involved fails in the instant case because there is no information in the Government's possession contradicting the statement of the manufacturer on Customs form 5523 that leather constituted 53 percent of the exterior surface of the uppers of the footwear involved.

The protestant has submitted a list of three other entries covering style Nos. 98630 and 98689 which were liquidated at your port under item 700.35, TSUS. This information was submitted to show that the instant footwear should also be classified as leather footwear. However, the protestant makes it clear that it is not in a position to contend that these shoes are the same as those in issue but points out that the styles are the same.

Issue.—(1) Does the presumption of correctness apply to the action of the Customs officer in this case?

(2) Is the classification under item 700.60, TSUS, and the appraisement on the American selling price of a similar domestic prototype void by reason of the failure of the Customs Service to follow its own procedural regulations?

(3) Must the invoice statements on Customs form 5523 that leather constituted 53 percent of the exterior surface area of the uppers of footwear be accepted at face value in the absence of evidence to the contrary?

(4) Did leather constitute over 50 percent of the exterior surface area of the uppers of the footwear involved so as to preclude classification under item 700.60, TSUS?

(5) Is the domestic prototype freely offered as required by section 402a(g), Tariff Act of 1930, as amended?

Law and analysis.—Title 28, United States Code, section 2635, as amended by the Customs Courts Act of 1970, provides as follows:

In any matter in the Customs Court:

(a) The decision of the Secretary of the Treasury, or his delegate, is presumed to be correct. The burden to prove otherwise shall rest upon the party challenging a decision.

The presumption of correctness with respect to the action of the Customs officer involved is a judicial presumption which arises in a Customs Court proceeding. On the administrative level, as in this

instance, we will take into account all the facts we can ascertain and the circumstances which led to the liquidation of the instant entry under item 700.60, TSUS. We will not presume that the action of the Customs officer involved was correct.

The failure to send the protestant a notice of increased duties pursuant to section 152.2, Customs Regulations (19 CFR 152.2) does not invalidate the liquidation because the protestant's right to protest was not prejudiced by our action.

The classification of the instant footwear under item 700.60, TSUS, and its appraisement on the American selling price of the Uniroyal Jaguar is not void because the Customs Service did follow its own procedural regulations.

Section 152.24(c)(2) Customs Regulations (19 CFR 152.24(c)(2)) requires that importers of footwear classifiable under item 700.60, TSUS, provide the appropriate Customs officer at the port of entry with a sample from the first commerical shipment of each model or style of such footwear imported into the United States. The samples are then forwarded to the area director, New York Seaport Area, for ASP determination.

Although the protestant states a belief that it supplied a sample to Customs in response to a request therefor, we have no record of receipt of that sample. Without a sample of the footwear in issue, the area director, New York Seaport Area, could not comply with the requirements of section 152.24(c), Customs Regulations (19 CFR 152(c)).

As support for its position that the invoice statement, in conjunction with purchase order, must be accepted at face value in the absence of evidence establishing the contrary, the protestant has cited a Customs ruling, C.S.D. 79–274, dated January 23, 1979. That ruling held that invoice prices shown for certain scissors represented the export value which must be accepted in the absence of evidence establishing the falsity of the invoices. Further, circumstantial evidence which creates a doubt as to the bona fides of the invoice prices may invite closer scrutiny of the transaction, but cannot be used to reject such price, if unsupported by evidence establishing such falsity.

Our experience with respect to that information on invoices dealing with the exterior surface area of footwear uppers supplied by foreign manufacturers is that such information is unreliable. This is true not because the foreign manufacturers deliberately falisfy the measurement of the upper, but because they do not know precisely what to measure in determining the exterior surface area of footwear uppers. Consequently, many such measurements are inaccurate.

It is our view that the known unreliability of invoice information with respect to the measurement of the exterior surface area of shoe uppers distinguishes it from the value information shown on invoices.

Therefore, we do not agree that the exterior surface measurement of the footwear upper shown on the Customs form 5523 must be accepted at face value.

The liquidation of three other entries covering the style Nos. 98630 and 98689 under item 700.35, TSUS, does not sustain protestant's claim at all inasmuch as it admits that these styles were not produced by the same manufacturer.

Under the circumstances we believe that the sample shoes submitted to this office with the protestant's letter, dated March 30, 1978, is the best evidence as to the composition of the exterior surface area of the styles in issue.

It is our position based on the laboratory report issued by the U.S. Customs Laboratory in Washington, D.C., that style W98633 is precluded from classification under item 700.60, TSUS, because leather comprises over 50 percent of the exterior surface area of its upper. However, style W98630 is not excluded from classification under item 700.60, TSUS, because leather does not cover over 50 percent of the exterior surface area of its upper.

The protestant did not submit a sample of style W98689 with its letter of March 30, 1978. However a laboratory analysis of that style by the (name of laboratory) shows that leather occupies over 50 percent of the exterior surface area of that style. Consequently, it is our position that style W98689 is excluded from classification under item 700.60, TSUS.

We note that the protestant states that there is a substantial question as to whether the domestic prototype was freely offered to all purchasers. The Customs Service was satisfied at the time of exportation of the footwear in issue that the domestic model was freely offered in compliance with section 402/402a, Tariff Act of 1930.

Holding.—You should allow the protest with respect to styles W98633 and W98689 and deny the protest with respect to style W98630.

(C.S.D. 80–147)

Classification: Vinyl Mittens for Children Designed for Use in Skiing

Date: January 7, 1980
File: CLA-2:RRUCGC
061029 c

Re Decision on application for further review of protest No. 1001–8–006868.

This protest was filed on June 1, 1978, against your decision in the liquidation on March 10, 1978, of entry No. 78–247377, dated December 17, 1977, at the port of New York.

This ruling concerns the tariff classification of certain gloves manufactured in Taiwan.

Facts.—The gloves are described as vinyl mittens, style No. 3281–39. The mittens feature a hook and clasp, an extra piece of vinyl stitched along the thumb portion, cuffs with an elastic gauntlet, and a three-ribbed piece of vinyl across the knuckles. These mittens are designed for children between 3 and 7 years of age.

The mittens were classified in liquidation under the provision for gloves of rubber or plastics: * * * Other, in item 705.86, Tariff Schedules of the United States (TSUS), and duty was assessed at the rate of 35 percent ad valorem.

The protestant claims that the mittens are classifiable under the provision for other ski equipment, in item 734.97, currently 734.99, TSUS, and dutiable at the rate of 9 percent ad valorem, or free under the Generalized System of Preferences (GSP). In the alternative, the protestant claims that the mittens are classifiable under item 735.05, TSUS, the provision for boxing gloves, and other gloves, not provided for in other provisions of subpart D, part 5, schedule 7, TSUS, specially designed for use in sports, and dutiable at the rate of 7.5 percent ad valorem, or free under the GSP. The claim is based upon *Stonewall Trading Co.* v. *United States*, 64 Cust. Ct. 482, C.D. 4023 (1970).

You maintain that mittens designed for children from 3 to 7 years of age are not chiefly used for skiing in view of the small number of people in that age group who ski. As to the protestant's alternative claim, you state that there are no winter sports engaged in by this age group for which these mittens show special design.

Issue.—(1) Do children ranging in age from 3 to 7 years engage in the sport of skiing?

(2) Do the gloves possess those characteristics which show that they are specially designed for use in the sport of skiing?

Law and analysis.—Information before this office is that children of very tender years including 2-year-olds, engage in the sport of skiing.

In the *Stonewall Trading* case, *supra*, the court ruled that certain vinyl gloves were properly classifiable under the provision for other ski equipment, in item 734.97, TSUS. Those gloves were found to possess the following characteristics:

1. A hook, and clasp to hold the gloves together.
2. An extra piece of vinyl stitched along the thumb portion to meet the stress caused by the flexing of the knuckles when the skier grasps the ski pole.
3. An extra piece of red-colored vinyl with padding reinforcement and inside stitching, which is securely stitched across the middle of the glove where the knuckles bend and cause stress.
4. Cuffs with an elastic gauntlet to hold the glove firmly

around the wrist, so as to be waterproof, and to keep it securely on the hand.

The gloves in issue are in all material respects similar to the gloves which were the subject of the above cited case. They meet all the tests set forth therein and are specially designed for use in the sport of skiing. There is no requirement that such gloves be chiefly used in the sport of skiing in order to qualify for classification under item 734.97, currently 734.99, TSUS.

The vinyl mittens, style No. 3281-39, are classifiable under the provision for other ski equipment, in item 734.97, currently 734.99, TSUS, and dutiable at the rate of 9 percent ad valorem or entitled to free entry under the Generalized System of Preferences, if otherwise qualified.

Holding.—You should allow the protest. Your file is returned.

(C.S.D. 80-148)

Vessel Repairs: Burden of Proof To Support Remission of Duties Under 19 U.S.C. 1466(a); Dutiability of Cleaning Costs

Date: January 9, 1980
File: VES-13-18-RRUCDC
104396 JL

This ruling concerns a petition for remission of vessel repair duties filed under section 4.14(k), Customs Regulations.

Issues.—(1) Has the petitioner carried its burden under the vessel repair statute of establishing by good and sufficient evidence that the repairs were necessitated by a casualty?

(2) Are the expenses of cleaning the quay in which the vessel rests while repairs are effected dutiable as a part of the cost of repairs?

Facts.—Excerpts of daily logs submitted by the petitioner disclose that the vessel, an oceangoing tugboat, suffered an anchor winch failure while on duty in the North Sea on May 18, 1977. The vessel subsequently put into Great Yarmouth, England, for repairs.

Details of the work carried out from May 29, 1977, to June 30, 1977, disclose that a new main-drive shaft was installed in the winch unit, the engine was serviced, oil changed, etc. The new drive shaft was forwarded from the United States for installation into the winch unit. Also, two men from the Great Yarmouth yard were utilized to assist the vessel's engineers with powerpack changes on the port and starboard engines. Men from the yard were also utilized to assist the crew with installation of the port tow cable. Last, the quay was cleaned of the vessel's rubbish, empty drums, cables, steel, wire, etc.

The petitioner's position is that the vessel repairs should be either classified as necessary due to stress of weather or other casualty pursuant to 19 U.S.C. 1466(d), or classified as free of duty as staging costs pursuant to CIE 1822/58 and 19 U.S.C. 1466(a).

Law and analysis.—In headquarters case 104229, dated October 11, 1979, it was held that the cost of repairs accomplished in a foreign country on a main circulating pump of a vessel are not remissible under the vessel repair statute when there has been no evidence presented tending to show that the failure of the pump was not attributable to normal wear and tear. (citing CIE's 1347/58, 920/60, 872/60, and headquarters case 103573, dated Oct. 3, 1978).

CIE 1822/58, dated October 29, 1957, held, among other things, that the erection of staging necessary to facilitate work is not classifiable as repairs under the vessel repair statute.

In the instant case the petitioner has submitted no evidence other than excerpts from the daily log which merely has a notation "anchor winch will not clutch in." Under the ruling in case 104229, no remission can be allowed on the basis of a bare assertion by a petitioner that repairs were necessitated by a casualty.

Staging costs are costs incurred for the erection of temporary structures that are used for support while a vessel is undergoing repairs, in other words scaffolding. It is obvious that the cost of cleaning the quay of rubbish generated while repairs were effected cannot be classified as staging costs. However, in CIE 18/48, dated January 12, 1948, it was held that cleaning which is not preparatory to the making of dutiable repairs is not dutiable under the vessel repair statute. We are of the opinion that the cleaning charges in this case were not part of the costs of repairs effected to the vessel and observe that they are analagous to drydocking charges which were also held to be duty free in CIE 18/48.

Notwithstanding the above, however, the invoice from the yard and the details of work carried out furnished by the yard do not break down the amount spent on each classifiable item. Consequently, the principle espoused in CIE 1188/60 that the costs of nondutiable repairs may only be remitted provided the charges therefor are segregated from other charges will control, and the cleaning cost will be dutiable as it is not segregated from the dutiable charges.

Holding.—(1) The cost of repairs accomplished in a foreign country on an anchor towing winch of a vessel are not remissible under the vessel repair statute when there has been no evidence presented tending to show that the failure of the winch was not attributable to normal wear and tear.

(2) The cost of cleaning the quay in which a vessel was berthed during the time that repairs were effected to it are not classifiable as

repairs under the vessel repair statute, providing charges therefor are segregated from the dutiable charges on the invoice supplied by the shipyard.

(C.S.D. 80-149)

Generalized System of Preferences: Certificate-of-Origin Form A; Procedure in Cases of Doubtful Authenticity

Date: January 9, 1980
File: RRUCV RP
061616

Re application for further review of protest No. 2704-8-00948.

DISTRICT DIRECTOR OF CUSTOMS,
Los Angeles, Calif.

DEAR SIR: The subject protest concerns the qualification of certain imported tape recorders for duty-free treatment under the Generalized System of Preferences (GSP). The merchandise in question was imported from Hong Kong.

Section 10.176(a) of the Customs Regulations states that merchandise:

> May qualify for duty-free entry under GSP only if the sum of the cost or value of the materials produced in the beneficiary developing country (BDC) plus the direct costs of processing operations performed in such country is not less than 35 percent of the value of the article as appraised in accordance with section 402 or 402a, Tariff Act of 1930, as amended.

Furthermore, section 10.178(a) states:

> As used in 10.176, the words, direct costs of processing mean those costs either directly incurred in, or which can be reasonably allocated to, the growth, production, manufacture, or assembly of the specific merchandise under consideration.

In the instant case, duty-free treatment under the GSP for the subject merchandise was disallowed, based on the import specialist's conclusion that the 35-percent requirement had not been fulfilled. The file in this case reflects that a manufacturer's cost-breakdown sheet was submitted to Customs which included an amount for research and development of an unspecified nature. The import specialist determined that the research and development cost was not properly part of the direct costs of processing operations, since no evidence was submitted to demonstrate that this cost related solely to the manufacture of the merchandise in question within the meaning of section 10.178(a)(3), Customs Regulations. The exclusion of the research and development cost rendered the beneficiary de-

veloping country (BDC) input less than 35 percent. Consequently, the subject merchandise was not afforded duty-free treatment under the GSP.

It is the position of the protestant that both the certificate-of-origin form A and the manufacturer's cost-breakdown sheet indicate a BDC input greater than the required 35 percent; therefore, the subject tape recorders qualify for GSP treatment.

We note that the record in this particular case indicates that the importer (protestant) complied with section 10.173, Customs Regulations, by filing a duly executed certificate-of-origin form A with district director for each entry. Apparently, Customs also requested and received a manufacturer's cost-breakdown sheet from that importer.

In the absence of a reasonable likelihood that eligible merchandise would not meet the minimum 35 percent origin criterion under the GSP, it is presumed that the form A, issued by the appropriate certifying authority, is correct. In the administration of the GSP, it is an established practice to require that the district director forward the certificate-of-origin form A to headquarters for reverification, if the district director has reason to doubt the authenticity of the form A or its contents. Upon receipt of the form A, headquarters will conduct the reverification and provide advice to the district director as to the disposition of the entry with regard to the GSP.

In the case before us, the above-referenced procedure was not followed. Accordingly, you are directed to grant the protest in full.

(C.S.D. 80-150)

American Selling Price: Revisions or Amendments to Catalogs and Price Lists for Footwear; Requirement to Promptly Furnish Under 19 CFR 152.24

Date: July 24, 1980
File: CLA-2:RRUC SEC 065347

AREA DIRECTOR, NEW YORK SEAPORT,
New York, N.Y.

DEAR SIR: This letter concerns the administration of the American selling price provisions as they apply to footwear.

As you know, section 152.24 of the Customs Regulations provides that in order for domestic producers of footwear of the same class or kind as that classifiable under item 700.60, Tariff Schedules of the United States, to insure consideration of their merchandise in making

determinations regarding the existence or nonexistence of an American selling price, they shall furnish you with catalogs and price lists covering such footwear. The regulations further provide that revisions or amendments to the catalogs and price lists shall be promptly forwarded to you along with the required certifications.

We have become aware that revisions and amendments of price lists are frequently not promptly furnished, thereby hampering the orderly administration of the American selling price provisions as they apply to footwear. Consequently, we shall make it known by publication of this letter that the Customs Service shall consider that amendments or revisions to price lists and catalogs submitted more than 60 days after the effective date of the revisions or amendments will not be considered promptly furnished. Revisions or amendments to catalogs and price lists submitted less than 60 days from the effective date of the changes shall be applied from the date of the changes. Revisions or amendments to catalogs and price lists submitted more than 60 days from the effective date of the changes shall be applied no more than 60 days back from the date of receipt of the changes by the Area Director, New York Seaport. You should be guided accordingly.

Decisions of the United States Court of Customs and Patent Appeals

(C.A.D. 1252)

ARMSTRONG BROS. TOOL CO. ET AL. *v.* THE UNITED STATES, No. 80–20

1. ITC DETERMINATION OF NONINJURY

Appeal from judgment of U.S. Customs Court, 483 F. Supp. 312, 84 Cust. Ct. ——, C.D. 4838 (1980), which upheld the International Trade Commission's (ITC's) determination that a domestic industry was not being injured or likely to be injured or prevented from being established by reason of importation of tools (wrenches, pliers, screwdrivers, and metal-cutting snips and shears) from Japan that were being, or likely to be, sold at less than fair value within the meaning of section 201(a) of the Antidumping Act of 1921, as amended (19 U.S.C. 160(a)). Affirmed.

2. STANDARD OF REVIEW

The sole standard of review of factual determinations of injury or likelihood of injury in antidumping cases is whether the ITC's determination is supported by substantial evidence.

U.S. Court of Customs and Patent Appeals, August 7, 1980

Appeal from U.S. Customs Court, C.D. 4838

[Affirmed.]

Frederick L. Ikenson, attorney for appellants.

Alice Daniel, Assistant Attorney General, *David M. Cohen*, Director, *Joseph I. Liebman*, Attorney in Charge, Field Office for Customs Litigation *Sidney N. Weiss*, Commercial Litigation Branch.

H. William Tanaka, Lawrence R. Walders, Wesley K. Caine, attorneys for party-in-interest, appellee.

[Oral argument on June 5, 1980 by Frederick L. Ikenson, for appellants, Sidney N. Weiss, appellee United States, Wesley K. Caine for appellee party-in-interest.]

Before: MARKEY, *Chief Judge*, RICH, BALDWIN and MILLER, *Associate Judges*, and RE, *Chief Judge*, U.S. Customs Court.[1]

[1] The Honorable Edward D. Re, Chief Judge, U.S. Customs Court, sitting by designation.

MILLER, Judge.

This is an [1] appeal from a judgment of the U.S. Customs Court, 483 F. Supp. 312, 84 Cust. Ct.——, C.D. 4838 (1980), upholding the determination of the U.S. International Trade Commission (ITC) that a domestic industry was not being injured or likely to be injured or prevented from being established by reason of the importation of tools (wrenches, pliers, screwdrivers, and metal-cutting snips and shears) from Japan that were being, or likely to be, sold at less than fair value within the meaning of section 201(a) of the Antidumping Act of 1921, as amended (19 U.S.C. 160(a)).[2] We affirm.

The background and relevant facts are thoroughly presented in the opinion of the Customs Court and need not be repeated.

In appeals from the Customs Court involving determinations of injury or likelihood of injury in antidumping and countervailing duty cases considered by the Tariff Commission (now the ITC), this court has conducted its review upon the record made before the Commission [3] and has held that such review is limited to determining "whether the Commission has acted within its delegated authority, has correctly interpreted (pertinent) statutory language, and has correctly applied the law." *City Lumber Co.* v. *United States*, 59 CCPA 89, 92, C.A.D. 1045, 457 F. 2d 991, 994 (1972). As to the evidentiary record, the standard of this review has been stated to be whether the Commission's determination is supported by substantial evidence.[4] *City Lumber Co., supra* at 95, 457 F. 2d at 996. In *Imbert Imports, Inc.* v. *United States*, 60 CCPA 123, 127, C.A.D. 1094, 475 F. 2d 1189, 1192 (1973), the point was made that even if the Administrative Procedure Act applied (not decided), the Commission's determination was not arbitrary or an abuse of discretion. However, there appears to be no real

---

[2] 19 U.S.C. 160(a) provides as follows:

> (a) Whenever the Secretary of the Treasury (hereinafter called the Secretary) determines that a class or kind of foreign merchandise is being, or is likely to be, sold in the United States or elsewhere at less than its fair value, he shall so advise the U.S. Tariff Commission, and the said Commission shall determine within 3 months thereafter whether an industry in the United States is being or is likely to be injured, or is prevented from being established, by reason of the importation of such merchandise into the United States. * * *

The U.S. Tariff Commission was subsequently renamed the U.S. International Trade Commission by section 171(a) of the Trade Act of 1974 (19 U.S.C. 2231(a) (1976)).

[3] *De novo* review by the Customs Court in a countervailing duty case was approved by this court, where the administrative record before the Treasury Department was clearly deficient, in *ASG Industries Inc.* v. *United States*, 67 CCPA ——, 610 F. 2d 770, C.A.D. 1237 (CCPA 1980). In such a case, this court's review would be on the record developed before the Customs Court. The Trade Agreements Act of 1979 (Public Law 96-39, 93 Stat. 144, 302 (1979)) requires an adequate record, and this court may now apply the normal standards of review of trial court judgments.

[4] In *Consolo* v. *Federal Maritime Commission*, 383 U.S. 607, 619-20 (1966), the Supreme Court said:

> We have defined "substantial evidence" as "such relevant evidence as a reasonable mind might accept as adequate to support a conclusion." *Consolidated Edison Co.* v. *Labor Board*, 305 U.S. 197, 229 * * *. This is something less than the weight of the evidence, and the possibility of drawing two inconsistant conclusions from the evidence does not prevent an administrative agency's finding from being supported by substantial evidence.

difference between such standards. *See Imbert Imports, Inc., id.*, where this court said:

> In short, we find that the findings of the Commission are supported by substantial evidence, and that the factors pointed out in the chairmans [sic] dissent are not of sufficient moment to establish that the decision of the majority was arbitrary.

In view of the foregoing, we conclude that the issue before this court in this case is properly stated to be whether the Customs Court correctly held that the Commission's determination is supported by substantial evidence in the record. This accords with the standard established by Congress in the Trade Agreement Act of 1979, which added a new section 516A to the Tariff Act of 1930, (Public Law 96–39, 93 Stat. 144, 302 (1979)). See also *ASG Industries, Inc., supra.*

Our review of appellants' arguments and portions of the record relating thereto persuades us that the Customs Court's holding is correct.

In affirming the judgment of the Customs Court, we adopt the court's opinion as our own, with the single modification that we would state the **[2]** sole standard of review of factual determinations of injury or likelihood of injury in antidumping cases to be whether the Commission's determination is supported by substantial evidence.

Affirmed.

Decisions of the United States Customs Court

United States Customs Court

One Federal Plaza

New York, N.Y. 10007

Chief Judge

Edward D. Re

Judges

Paul P. Rao
Morgan Ford
Scovel Richardson
Frederick Landis
James L. Watson
Herbert N. Maletz
Bernard Newman
Nils A. Boe

Senior Judge

Samuel M. Rosenstein

Clerk

Joseph E. Lombardi

Customs Decisions

(C.D. 4866)

RANK PRECISION INDUSTRIES, INC., PLAINTIFF, *v.* UNITED STATES, DEFENDANT

Television Camera Lens System

SECTION 315(d)—FINDING MADE AFTER ALLEGED CHANGE IN PRACTICE

Where entry by plaintiff and liquidation of the subject merchandise by the district director under item 708.23, TSUS, occurred more than 2 years prior to a finding by the Secretary of the Treasury

(or his delegate) of an established and uniform practice in classifying the merchandise under item 685.10, TSUS, plaintiff's claim that an established and uniform practice was changed without notice in violation of section 315(d) of the Tariff Act of 1930, as amended, cannot be sustained. The statute is clear that the notice requirements for a change of practice are intended for the benefit of importers whose entries are made after a finding of an established and uniform practice. Plaintiff's contention that in 1974 (the year of importation) it relied upon the finding made in 1976 is obviously without merit.

MOUNTED LENSES (ITEM 708.23, TSUS)—"MORE THAN" DOCTRINE

The provision in item 708.23, TSUS, for mounted lenses is not applicable to merchandise which is "more than a transparent substance used to form an image fixed in a proper backing, support or setting." *Kalimar, Inc.* v. *United States*, 66 Cust. Ct. 112, 116, C.D. 4178 (1971). Hence, a Varotal 30 television camera lens system which, in addition to a mounted lens, includes many significant electrical and mechanical components that are not embraced by the common meaning of the term "mounted lens" (as determined in *Kalimar*), is more than a mounted lens within the purview of item 708.23, TSUS.

OPTICAL INSTRUMENTS—STATUTORY DEFINITION IN HEADNOTE 3, PART 2, SCHEDULE 7

In determining whether imported merchandise is classifiable as an optical instrument under the TSUS, the statutory definition of the term in headnote 3, part 2, schedule 7 is controlling. *United States* v. *Ataka America, Inc.*, 64 CCPA 60, 65, n. 4, C.A.D. 1184, 550 F. 2d 33 (1977). Under the definition of optical instruments in headnote 3, the issue is not whether the optical element is subsidiary or dominant, but rather "the statutory distinction is between 'subsidiary' and *not* 'subsidiary.'" [Italic added.] (*Id.* at 66, n. 5.) Since the subject merchandise incorporates one or more optical elements which are not subsidiary with regard to the operation of the article, it is properly classifiable as an optical instrument under item 708.89, TSUS. *Norman G. Jensen, Inc.* v. *United States*, 77 Cust. Ct. 9, 13, C.D. 4668 (1976).

SAME—"INSTRUMENT" DEFINED

Webster's New International Dictionary (2d ed. 1950), p. 1288, broadly defines the term "instrument," as follows: "That by means of which any work is performed or result is effected; a medium; means." The Varotal 30 television camera lens system is an instrument within the foregoing definition, and within headnote 3, part 2, schedule 7, TSUS.

STATUTES INVOLVED

19 U.S.C. 1202, Tariff Schedules of the United States:
Classified:
Schedule 7, part 2, subpart A:
Lenses, prisms, mirrors, and other optical

elements, all of the foregoing whether mounted or not mounted:

* * * * * * *

Mounted:

Lenses:

* * * * * * *

708.23 Other ..... 12.5% ad val.

Defendant's alternative claim:

Optical appliances and instruments not provided for elsewhere in part 2 of this schedule; frames and mountings for such articles, and parts of such frames and mountings:

* * * * * * *

708.89 Other appliances and instruments ... 22.5% ad val.

Plaintiff's claim:

Schedule 6, part 5:

Radiotelegraphic and radiotelephonic transmission and reception apparatus; radiobroadcasting and television transmission and reception apparatus, and television cameras; record players, phonographs, tape recorders, dictation recording and transcribing machines, record changers, and tone arms; all of the foregoing, and any combination thereof, whether or not incorporating clocks or other timing apparatus, and parts thereof:

685.10 Television cameras, and parts thereof ..... 6% ad val.

Court No. 76-12-02771

[Dismissed without affirming classification of District Director.]

Decided July 28, 1980

Siegel, Mandell & Davidson, Esqs. (*Herbert T. Posner*, Esq. of counsel) for the plaintiff.

Alice Daniel, Assistant Attorney General, *Joseph I. Liebman*, Attorney in Charge, Field Office for Customs Litigation, and *Sidney N. Weiss*, trial attorney, for the defendant.

NEWMAN, Judge: This action presents for determination the proper classification, and hence the proper rate of duty, for a Varotal 30 lens package imported by plaintiff from England and entered at the port of Chicago, Ill., on June 25, 1974. In liquidating the entry, Customs classified the imported article as a mounted lens (other than projection) under item 708.23 of the Tariff Schedules of the United States (TSUS), as modified by T.D. 68-9, and assessed duty at the

rate of 12.5 per centum ad valorem. As an alternative classification, the Government claims that the merchandise is encompassed by the provision in item 708.89, TSUS, as modified, for "Other (optical) appliances and instruments," for which the rate of duty is 22.5 per centum ad valorem. Plaintiff claims that the merchandise is properly dutiable at the rate of 6 per centum ad valorem under the provision in item 685.10, TSUS, as modified, for parts of television cameras.

I find that the merchandise is classifiable under item 708.89, TSUS, as alternatively claimed by the Government. Accordingly, this action is dismissed without affirming the classification of the District Director under item 708.23, TSUS.

SAME—TELEVISION CAMERA LENS SYSTEM

The Varotal 30, which was referred to by plaintiff's witness as an "optical system" and as an "optical package," is essentially a television camera lens with a sophisticated system of electronic and mechanical controls for the iris (aperture), zoom, and focus, which are all optical features of the merchandise. Since the record shows that the major electromechanical components of the merchandise are directly related to the optical function of the lens system, the electromechanical features of the Varotal 30 do not exclude the merchandise from the definition of "optical instruments" in headnote 3, part 2, schedule 7, TSUS. *Cf. Corning Glass Works* v. *United States*, 82 Cust. Ct. 249, C.D. 4807 (1979). The "Tally" lights are ancillary and subordinate to the optical components of the merchandise.

GENERAL INTERPRETATIVE RULE 10(ij)—PARTS OF TELEVISION CAMERAS SPECIFICALLY PROVIDED FOR AS OTHER OPTICAL APPLIANCES AND INSTRUMENTS

Since the subject merchandise is specifically provided for as an optical appliance or instrument under item 708.89, TSUS, classification as part of a television camera under item 685.10, TSUS, is precluded by general interpretative rule 10(ij). *Cf. Jensen, supra*, 77 Cust. Ct. at 21.

THE FACTS [1]

The Varotal 30 is a television camera lens system comprised of a number of optical, electrical, and mechanical components.[2] The

[1] The record consists of the testimony of five witnesses called on behalf of plaintiff and one witness called by defendant. Plaintiff's witnesses were: Brendan M. Murphy, treasurer of plaintiff, Rank Precision Industries, Inc.; Kish B. Sadhvani, plaintiff's product manager; Raymond J. Smith, employed by RCA Corp. as engineering manager for camera equipment; David Frederick Shade, chief accountant for Rank Taylor Hobson, Leichester, England; and Walter David, Jr., operations manager for Optical Imports, Inc. Defendant called as its witness Dr. Leonard Bergstein, professor of electro-optical sciences at Polytechnic Institute of New York. Both parties submitted various exhibits. The official papers were received without marking.

[2] The importation, when assembled in operating condition, consists of the following component parts: Power supply module, iris servo drive module, focus servo module drive, zoom servo module drive, systems board, dual demand shot box, adjustable pan bar S type, Tally lights, focus demand control, range extender remote control, electrical connecting cables, in addition to basic 10:1 zoom lens unit.

primary function of this optical-electro-mechanical system is to transmit light and a focused image to the broadcast equipment, where it is converted into electrical signals.

The optical unit of the Varotal 30 contains the glasses of the lens and includes four main subassemblies: The focus unit, the zoom unit, the iris unit, and the rear unit. To the body of the optical unit are fitted three drive units for controlling the focus, the zoom, and the iris mechanism (aperture) of the lens. The iris unit consists of a system of blades that regulate the amount of light transmitted through the lens to the pickup tubes located within the television camera body, and is operated by means of an iris servo drive module. The zoom feature of the lens is accomplished by changing the positioning of the optical elements so as to vary the effective magnification of the lens.

A motor drive allows zoom by electromechanical movement of the optical elements within the system. An adjustable pan bar S type provides a zoom rate method of servo zoom control. The dual demand shot box is a programing component which provides a method of preset servo control of both focus and zoom functions. The Varotal 30 also includes a number of circuits, amplifiers, switches, and other electrical components that are necessary to power and control the operation of the lens. In addition to the electrical components, the Varotal 30 includes various mechanical components that are required for the control and power of the lens and to interface the system with the television camera.[3] Finally, the imported merchandise contains two Tally lights that are the means by which the performers are made aware of the camera on the air.

OPINION

I

Initially, we consider plaintiff's claim that classification of the subject merchandise by the District Director under item 708.23, TSUS, represents a change, without notice, of a prior uniform and established practice (viz, during the years 1970–72) of classifying the merchandise as parts of television cameras under item 685.10, TSUS, in violation of section 315(d) of the Tariff Act of 1930, as amended (19 U.S.C. 1315(d)). That provision reads:

> No administrative ruling resulting in the imposition of a higher rate of duty or charge than the Secretary of the Treasury shall find to have been applicable to imported merchandise under an established and uniform practice shall be effective with respect to articles entered for consumption or withdrawn from warehouse

[3] The subject merchandise is connected directly to the front of the television camera.

> for consumption prior to the expiration of 30 days after the date of publication in the weekly Treasury decisions of notice of such ruling * * *.

At the outset, it must be determined "whether the Secretary of the Treasury (or his delegate) has made a 'finding' of 'an established and uniform practice' pursuant to section 315(d)". *Ditbro Pearl Co.* v. *United States*, 62 CCPA 95, 96, C.A.D. 1152, 515 F. 2d 1157 (1975); *Asiatic Petroleum Corp.* v. *United States*, 59 CCPA 20, 22, C.A.D. 1029, 449 F. 2d 1309 (1971). In order to establish the requisite finding under the statute, plaintiff introduced in evidence a letter by Customs dated August 31, 1976 (exhibit 3), concerning the tariff classification of "motorized television lenses for industrial television cameras produced in West Germany".[4] This letter, somewhat equivocally, states:

> (I)t appears that a uniform and established practice exists of classifying the merchandise in question under the provision for parts of television cameras, in item 685.10, TSUS.

Plaintiff contends that it "was entitled to rely upon the 'finding' made by the Customs Service" (brief, 24).

Significantly, the official papers show that the entry in this case was made on June 25, 1974, and liquidated on July 19, 1974—more than 2 years prior to the finding of an established and uniform practice, as set forth in exhibit 3. Consequently, it is obvious that at the time of importation in 1974 plaintiff could not have relied upon the section 315(d) finding made by Customs in 1976. Indeed, the statute is clear that the notice requirement for a change of practice is intended for the benefit of importers whose entries are made after a finding of an established and uniform practice. *Asiatic Petroleum Corp., supra.*

In order to substantiate the August 31, 1976 finding, plaintiff presented the testimony of its witness Murphy concerning the liquidations in 190 entries by plaintiff of Varotal systems and other merchandise [5] at the ports of New York, Chicago, and Los Angeles during the period of 1970–72.[6] It appears that of these 190 entries, 182 were liquidated as television camera parts, and 8 were liquidated as mounted lenses (R. 32).[7] Thus, rather than proving the existence of an established and uniform practice during 1970–72, Murphy's testimony demonstrates

[4] The "motorized television lenses" are described in the letter as follows: "These are motorized * * * television lenses for use on closed circuit vidicon television cameras. The television lenses are controlled by three motors, and power is transmitted to the lens elements and the iris by a system of cables which are attached to the television camera and the television lens".

[5] The 190 entries included Varotal systems and parts thereof, closed circuit television systems, cables, and other parts of television cameras.

[6] The letter of Aug. 31, 1976 (exhibit 3), does not show that a uniform and established practice of classifying the merchandise under item 685.10 existed in the 1970–72 period, which is the period of time relied upon by plaintiff.

[7] Plaintiff's witness David also testified that television lens systems, manufactured by Aegeneiux and imported by Optical Imports, Inc., from 1969 to 1973, were classified and liquidated by Customs as parts of television cameras under item 685.10, TSUS.

that there was some ambivalence on the part of Customs respecting the appropriate classification for the merchandise. Moreover, in a letter written on February 15, 1973, by Customs to plaintiff (exhibit A), plaintiff was notified that zoom lenses and rear units for television cameras were not classifiable as parts of television cameras in view of the specific provision in item 708.23, TSUS, for mounted lenses, citing general interpretative rule 10(ij).

In sum, since as of the liquidation date (July 19, 1974) there was no finding under section 315(d) relating to the subject merchandise, nor was there in fact an established and uniform practice during the years 1970–72 of classifying the merchandise as parts of television cameras under item 685.10, TSUS, I find that plaintiff's claim under section 315(d) is without merit.

II

We now turn to the merits of whether the Varotal 30 system was properly classified by Customs as a mounted lens under item 708.23, TSUS. Plaintiff maintains, and I agree, that the merchandise is more than a mounted lens within the common meaning of that term.[8]

As recently observed by Chief Judge Markey of our Appellate Court in *United States* v. *Texas Instruments*, 67 CCPA ——, C.A.D. 1244, —— F. 2d —— (1980):

> Only the most general of rules can be ascertained from the previous decisions dealing with the "more than" doctrine, and it appears that each case must in the first analysis be determined on its own facts. *E. Green & Son (New York), Inc.* v. *United States*, 59 CCPA 31, 34, C.A.D. 1032, 450 F. 2d 1396, 1398 (1971) * * *.

And in *Green, supra*, the Appellate Court also stated (59 CCPA at 34):

> * * * In order to determine if an article is more than that provided for in a particular tariff provision, it is necessary to ascertain the common meaning of the tariff provision and compare it with the merchandise in issue. It is well established that in determining the common meaning of a term or word used in a tariff provision, court decisions, dictionary definitions, and other lexicographical authorities may be considered.

See also *Ozen Sound Devices* v. *United States*, 67 CCPA ——, C.A.D. 1246, —— F. 2d —— (1980); *The Englishtown Corporation* v. *United States*, 64 CCPA 84, 87, C.A.D. 1187, 553 F. 2d 1258 (1977).

In support of its contention that the Varotal 30 is more than a "mounted lens" within the common meaning of that term, plaintiff cites *Kalimar, Inc.* v. *United States*, 66 Cust. Ct. 112, C.D. 4178 (1971).

[8] Defendant does not claim that the provision in item 708.23, TSUS, for mounted lenses should be construed in accordance with any special commercial meaning or designation that differs from the common meaning. For an in depth discussion of commercial disignation see *S.G.B. Steel Scaffolding & Shoring Co., Inc.* v. *United States*, 82 Cust. Ct. 197, C.D. 4802 (1979).

There, a Kali-Copier for the Polaroid Swinger camera used to make copies of photographs and other objects was assessed with duty as "Other (optical) appliances and instruments" under item 708.89, TSUS, and was claimed by the importer to be properly dutiable as other mounted lenses under item 708.23, TSUS. The copier consisted of a metal frame or stand and close-up lens in a black circular casing. The Government argued that the mounted lens portion of the copier consisted only of the lens and its casing, and therefore the copier was more than a mounted lens. Hence, the issue was whether the imported copier was a mounted lens or more than a mounted lens for tariff purposes. Judge Maletz, writing for the First Division, held that the copier was more than a mounted lens, viz: it was a mounted lens with the added feature of a copying stand. In reaching its determination in *Kilimar*, the court cited and adopted the following definitions contained in Webster's New World Dictionary of the American Language, College Edition (1962) (66 Cust. Ct. at 116):

> Lens * * * 1. a piece of glass, or other transparent substance, with two curved surfaces, or one plane and one curved, regularly bringing together or spreading rays of light passing through it: a lens or combination of lenses is used in optical instruments to form an image: * * *.
>
> Mounted * * * 4. fixed on or in the proper backing, support, setting, etc. * * *.
>
> Mount * * * 6. to place, fix, or fasten on or in the proper support, backing, etc. for the required purpose; specifically, (a) to fix (a jewel) in a setting; (b) to fix (a specimen) on (a slide) for microscopic study; (c) to arrange (a skeleton, dead animal, etc.) for exhibition. * * *.

Applying the foregoing definitions, the *Kalimar* court determined that the mounted lens provision in item 708.23, TSUS, was not applicable to the copier since "the importation is more than a transparent substance used to form an image fixed in a proper backing, support or setting" (id. at 116).

Similarly here, it is patently clear that while the Varotal 30 includes a "transparent substance used to form an image fixed in a proper backing, support or setting", the merchandise also includes many significant electrical and mechanical components that are not embraced by the common meaning of the term mounted lens as determined in *Kalimar*. Accordingly, I agree with plaintiff's contention that the Varotal 30 is more than a mounted lens within the purview of item 708.23, TSUS; and therefore the District Director's classification under that TSUS item was erroneous.

III

Since the Varotal 30 is more than a mounted lens, as classified by Customs, we reach defendant's alternative claim that the merchandise

is classifiable under item 708.89, TSUS, as "Other (optical) appliances and instruments." In determining whether the imported merchandise is classifiable as an optical instrument under the TSUS, the statutory definition of the term in headnote 3, part 2, schedule 7, is controlling. *United States* v. *Ataka America, Inc.*, 64 CCPA 60, 65, n. 4, C.A.D. 1184, 550 F. 2d 33 (1977). Headnote 3 reads:

> 3. The term "optical instruments," as used in this part, embraces only instruments which incorporate one or more optical elements, but does not include any instrument in which the incorporated optical element or elements are solely for viewing a scale or for some other subsidiary purpose.

Under the foregoing definition the issue is not whether the optical element is subsidiary or dominant, but rather "the statutory distinction is between 'subsidiary' and *not* 'subsidiary'." [Italic added.] *Ataka*, 64 CCPA at 66, n. 5. It should be stressed that plaintiff does not contend in its brief that the optical elements of the Varotal 30 are subsidiary to the use of the merchandise as a lens system for a television camera, and obviously they are not subsidiary.[9]

In *Norman G. Jensen, Inc.* v. *United States*, 77 Cust. Ct. 9, 13, C.D. 4668 (1976), Judge Maletz observed with reference to headnote 3:

> As stated previously, the imported sights were classified under item 708.89 as other optical appliances and instruments. Also, as stated previously, headnote 3 of part 2, schedule 7 of the tariff schedules defines "optical instruments" as "instruments which incorporate one or more optical elements, but does not include any instrument in which the incorporated optical element or elements are solely for viewing a scale or for some subsidiary purpose." *Viewed against this statutory definition, it must be concluded that if an imported article consists of one or more optical elements the purpose of which is not subsidiary with regard to the operation of that article, then it is properly classifiable as an optical instrument under the tariff schedules.* See *Amaco, Inc.* v. *United States*, 74 Cust. Ct. 172, 179, C.D. 4602 (1975). See also *Librascope Div. of Singer-General Precision, Inc.* v. *United States*, 76 Cust. Ct. 197, C.D. 4656 (1976). [Italic added.]

Since the Varotal 30 incorporates one or more optical elements which are not subsidiary with regard to the operation of that article, it is properly classifiable as an optical instrument under item 708.89, TSUS.

Plaintiff argues that since the Varotal 30 is an appliance and not an instrument, the definition in headnote 3 of "opitcal *instruments*" [italic added] is inapplicable in this case, "which relieves plaintiff of the burden of establishing that the opitcal portion of the system is used for a subsidiary purpose" (reply brief, 11). This argument is specious.

---

[9] The optical components of the Varotal 30 are prominently depicted in schematic form in the manufacturer's promotional brochure (defendant's exhibit B).

Webster's New International Dictionary (2d ed. 1950), p. 1288, cited by plaintiff, broadly defines the term "instrument", as follows: "That by means of which any work is performed or result is effected; a medium; means". Plainly, then, the Varotal 30 is an instrument within the purview of headnote 3.

I am also unable to agree with plaintiff's contention that the merchandise is more than an optical appliance or instrument "as it contains a majority of components that are unrelated to the optical element of this system" (reply brief, 11). The Varotal 30, referred to by plaintiff's witness Murphy as an optical system (R. 29) and as an optical package (R. 42), is essentially a television camera lens with a sophisticated system of electronic and mechanical controls for the iris (aperture), zoom and focus, which are all optical features of the merchandise. Inasmuch as the record shows that the major electromechanical components of the merchandise are directly related to the optical function of the lens system, the electromechanical features of the Varotal 30 do not exclude the merchandise from the definition of optical instruments in headnote 3. *Cf. Corning Glass Works* v. *United States*, 82 Cust. Ct. 249, C.D. 4807 (1979) (machine for optical inspection of ampuls with nonoptical apparatus to mechanize and pace the inspection process).

In support of its "more than" argument, plaintiff strongly emphasizes the Tally light feature of the merchandise. As indicated above, these lights signal to the performers which camera is on the air at the particular time. The testimony of record shows that this feature is essential in television broadcasting. Nevertheless, a careful examination of the manufacturer's promotional brochures (defendant's exhibits B and C) fails to disclose any mention of the Tally light feature. The silence of the promotional brochures respecting the Tally lights is eloquent testimony as to their ancillary and subordinate status relative to the optical components of the merchandise, which are prominently depicted and described in the brochures.

The short of the matter is that, although the merchandise is more than a mounted lens within the common meaning of that term, the lens system herein meets the broader definition of optical instruments in headnote 3, and thus, falls within the purview of item 708.89, TSUS, as alternatively claimed by defendant. Since the subject merchandise is specifically provided for as an optical appliance or instrument under item 708.89, TSUS, classification as a part of a television camera under item 685.10, TSUS, is precluded by general interpretative rule 10(ij).[10] *Cf. Jensen, supra*, 77 Cust. Ct. at 21. Inasmuch as no reliquidation may be had in this case at the higher

[10] Rule 10(ij) provides that "a provision for 'parts' of an article covers a product solely or chiefly used as a part of such article, but *does not prevail over a specific provision for such part*". [Italic added.]

rate of duty applicable to "Other (optical) appliances and instruments" under item 703.89, TSUS, the action is dismissed without affirming the classification by the District Director. See *Sumitomo Shoji New York, Inc.* v. *United States*, 64 Cust. Ct. 299, 304, C.D. 3994 (1970).

Judgment will be entered accordingly.

Decisions of the United States Customs Court

Abstracts

Abstracted Protest Decisions

DEPARTMENT OF THE TREASURY, *August 4, 1980.*

The following abstracts of decisions of the United States Customs Court at New York are published for the information and guidance of officers of the customs and others concerned. Although the decisions are not of sufficient general interest to print in full, the summary herein given will be of assistance to customs officials in easily locating cases and tracing important facts.

ROBERT E. CHASEN,
Commissioner of Customs.

DECISION NUMBER	JUDGE & DATE OF DECISION	PLAINTIFF	COURT NO.	ASSESSED	HELD	BASIS	PORT OF ENTRY AND MERCHANDISE
				Par. or Item No. and Rate	Par. or Item No. and Rate		
P80/116	Ford, J. July 28, 1980	Rohr Industries, Inc.	77-1-00003, etc.	Item 680.47 $1.12 ea. + 17.5%	Item 690.40 5.5%	Rohr Industries, Inc. v. U.S. (C.D. 4824)	Los Angeles Voith turbo transmissions
P80/117	Boe, J. July 28, 1980	Mobay Chemical Corp. et al.	78-2-00254	Item 406.70 20% (items marked "A") Item 409.00 7¢ per lb. +	Item 405.25 1.4¢ per lb. + 9% (items marked "A") Item 406.70 24%	Agreed statement of facts	New York White or black urethane pastes (items marked "A"); urethane pastes other than those de-

				45%; 6.3¢ per lb. + 40%; 5.5¢ per lb. + 36%; 4.9¢ per lb. + 31%; 4¢ per lb. + 27%; 3.5¢ per lb. + 22.5% (items marked "B")	(items marked "B")		scribed as black or white (items marked "B")
P80/118	Re, C. J. July 29, 1980	Kombi Ltd.	76-3-00626	Item 705.35 15% Item 705 58 25%	Item 734.97 9%	Stonewall Trading Co. v. U.S. (C.D. 4023)	New York Ski gloves, ski mitts or ski mittens

Decisions of the United States Customs Court

Abstracts

Abstracted Reappraisement Decisions

DECISION NUMBER	JUDGE & DATE OF DECISION	PLAINTIFF	COURT NO.	BASIS OF VALUATION	HELD VALUE	BASIS	PORT OF ENTRY AND MERCHANDISE
R80/223	Boe, J. July 28, 1980	Federal Pacific Electric Co.	78-12-02282	Export value	Invoice unit prices, net packed, as set forth in entries and invoices	Agreed statement of facts	Buffalo Switches, switchboard parts and relays
R80/224	Boe, J. July 28, 1980	Uniroyal, Inc.	78-10-01770	American selling price	$5.25 per pair, less 2%, net, packed	Agreed statement of facts	Los Angeles Footwear for children and juniors
R80/225	Re, C. J. July 29, 1980	Holly Stores, Inc.	76-12-02740	Export value	Appraised values shown on entry papers less additions included in appraised values to reflect currency revaluation	C.B.S. Imports Corp. v. U.S. (C.D. 4739)	New York Wearing apparel, etc.
R80/226	Re, C. J. July 29, 1980	S. S. Kresge Co.	74-5-01190, etc.	Export value	Appraised values shown on entry papers less additions included in appraised values to reflect currency revaluation	C.B.S. Imports Corp. v. U.S. (C.D. 4739)	New York Wearing apparel, etc.

R80/227	Re, C. J. July 29, 1980	S. S. Kresge Co.	77-5-00712, etc.	Export value	Appraised values shown on entry papers less additions included in appraised values to reflect currency revaluation	C.B.S. Imports Corp. v. U.S. (C.D. 4739)	Longview (Portland, Oreg.) Wearing apparel, etc.
R80/228	Newman, J. July 29, 1980	Gehrig, Hoban & Co., Inc.	R69/3348, etc.	United States value	Determined by adding to f.o.b. unit invoice price in Swiss francs converted to a dollar value at rate of exchange in effect at time of entry (the "claimed value"), 53% of difference between claimed value and appraised value	Agreed statement of facts	New York Machine tools and accessories and parts thereof
R80/229	Newman, J. July 29, 1980	Gehrig, Hoban & Co., Inc., a/c Charmilles Corp. of America, and Frank P. Dow Co., Inc., a/c Charmilles Corp. of America	71-8-00876	United States value	Determined by adding to f.o.b. unit invoice price in Swiss francs converted to a dollar value at rate of exchange in effect at time of entry (the "claimed value"), 53% of difference between claimed value and appraised value	Agreed statement of facts	New York; Portland, Oreg. Machine tools and accessories and parts thereof
R80/230[1]	Boe, J. July 29, 1980	Charmilles Corp. of America	78-1-00649, etc.	United States value	Determined by adding to f.o.b. unit invoice price in Swiss francs converted to a dollar value at rate of exchange in effect at time of entry (the "claimed value"), 53% of difference between claimed value and appraised value	Agreed statement of facts	Los Angeles Machine tools and accessories and parts thereof

See footnote at end of table.

DECISION NUMBER	JUDGE & DATE OF DECISION	PLAINTIFF	COURT NO.	BASIS OF VALUATION	HELD VALUE	BASIS	PORT OF ENTRY AND MERCHANDISE
R80/231	Boe, J. July 29, 1980	Federal Pacific Electric Co.	76-5-01290	Export value	Invoice unit prices, net packed, as set forth in entries and invoices	Agreed statement of facts	Buffalo Switches, switchboard parts and relays

[1] Decision and judgment vacated and set aside by order of the court entered Aug. 13, 1980. See reappraisement abstract No. R80/260 for decision and judgment entered on Aug. 13, 1980.

Rehearing Motion Filed

JULY 28, 1980

Ben R. Hendrix Trading Co., Inc. *v.* United States, Court No. 79-6-01042.—MEMORANDUM OPINION AND ORDER GRANTING DEFENDANT'S MOTION TO DISMISS.—C.D. 4861. Motion by plaintiff.

Appeal to U.S. Court of Customs and Patent Appeals

Appeal 80–36. United States *v.* Philipp Overseas, Inc.—STAINLESS STEEL ANGLES—ANGLES OF ALLOY IRON OR STEEL: DRILLED, PUNCHED, OR OTHERWISE ADVANCED; NOT DRILLED, NOT PUNCHED, AND NOT OTHERWISE ADVANCED—TSUS. Appeal from C.D. 4859.

In this case certain stainless steel angles were assessed with duty at the rate of 8.5 percent ad valorem, plus additional duties on the chromium and molybdenum content, under the provision in item 609.86, Tariff Schedules of the United States, as modified by T.D. 68–9, for angles of alloy iron or steel, drilled, punched, or otherwise advanced. The Customs Court held that the merchandise was properly dutiable as claimed by plaintiff-appellee at the rate of 0.1 cent per pound plus 2 percent ad valorem, plus additional duties on the chromium and molybdenum content, under the provision in item 609.82, as modified by T.D. 68–9, for angles of alloy iron or steel, not drilled, not punched, and not otherwise advanced.

It is claimed that the Customs Court erred in finding and holding that the merchandise in issue is properly classifiable and dutiable under item 609.82, supra; in not finding and holding that the merchandise is properly classifiable and dutiable under item 609.86, supra; in finding and holding that the processes of annealing and pickling are not advancements for purposes of classification under item 609.82 or item 609.86, supra; in not finding and holding that the annealing and pickling processes performed on the imported merchandise after hot rolling resulted in the merchandise being otherwise advanced and thereby properly classifiable under item 609.86, supra; in applying the doctrine of ejusdem generis in support of its finding that the processes of annealing and pickling did not result in the imported merchandise being otherwise advanced for purposes of classification under item 609.82 or 609.86, supra.

Recent Unpublished Customs Service Decisions

The following listing of recent administrative decisions issued by the Office of Regulations and Rulings, U.S. Customs Service, and not otherwise published, is published for the information of Customs officers and the importing community. Although the decisions are not of sufficient general interest to warrant publication as Treasury decisions, the listing describes the issues involved and is intended to aid Customs officers and concerned members of the public in identifying matters of interest which recently have been considered by the Office of Regulations and Rulings.

A copy of any decision included in this listing, identified by its date and file number, may be obtained in a form appropriate for public distribution upon written request to the Office of Regulations and Rulings, attention: Legal Reference Area, room 2404, U.S. Customs Service, 1301 Constitution Avenue NW., Washington, D.C. 20229. These copies will be made available at a cost to the requester of 10 cents per page. However, the Customs Service will waive this charge if the total number of pages copied is 10 or less.

Decisions listed in earlier issues of the CUSTOMS BULLETIN, through July 2, 1980, are available in microfiche format at a cost of $23.85 (15 cents per sheet of fiche). It is anticipated that additions to the microfiche will be made quarterly and subscriptions are available. Requests for the microfiche now available and for subscriptions should be directed to the Legal Reference Area. Subscribers will automatically receive updates as they are issued and will be billed accordingly.

Dated: August 12, 1980.

JOHN T. ROTH,
Acting Director,
Regulations and Research Division.

Date of decision	File No.	Issue
7-23-80	104613	Instruments of international traffic: 55-gallon drums used to transport soya bean oil
6-17-80	104702	Vessels: Applicability of tariff schedules to yachts and pleasure boats
7-21-80	104712	Carrier control: Whether transportation of repair equipment between U.S. ports on foreign-flag vessel violates the coastwise laws; whether repairmen are passengers
7-10-80	712582	Country-of-origin marking: Commercial chinaware to be sold to institutional customers
7-14-80	713116	Prohibited and restricted importations: Whether a copyright notice may be put in a book published in Italy by a U.S. author
7-14-80	713201	Prohibited and restricted importations: Whether automobile is subject to Federal motor vehicle safety and emission standards
7-11-80	055491	Classification: Front freewheeling mechanism for bicycles (732.42, 912.10)
7-11-80	056515	Classification: Front freewheeling mechanism for bicycles (732.42, 912.10)
7-16-80	061212	Classification: Front freewheeling mechanism for bicycles (732.42, 912.10)
6-25-80	061520	American selling price: Men's protective boot (700.60)
6- 4-80	061535	Classification: Plastic soldiers; plastic tanks (737.15, 737.40, 737.95)
6-30-80	061542	Classification: Whether certain gloves are ski equipment (705.85, 735.06, 735.07)
7-11-80	061734	American selling price: Protective boot (700.60)
6-25-80	061792	Classification: Tire protection chains (652.30, 652.33, 652.35)
7-11-80	061844	Classification: Dolls with story flaps (737.22)
3-31-80	061850	American selling price: Child's protective boot (700.60)
6-25-80	061897	Classification: Tire protection chain (652.35)
7-11-80	061901	American selling price: Woman's open-toe, open-back, ankle-strap casual shoe (700.60)
6-25-80	061925	American selling price: Men's protective boot (700.60)
6-25-80	061997	American selling price: Men's fabric upper, rubber-soled footwear (700.60)
6-25-80	062809	Classification: Hang gliders (694.21, 694.31, 694.64, 694.65)
6-29-80	064372	Classification: Bicycle hubs (732.41, 732.42, 912.10)
6- 4-80	064501	Classification: Skidding winches designed to be mounted on tractors (664.10, 692.30, 666.00, 870.40)
6-25-80	064539	Classification: Dolls (737.22)
7-11-80	064687	Classification: Color brush (750.50, 750.55, 760.05, 760.15)
6- 4-80	064797	Classification: Plastic miniature trees (748.20, 774.45)
7-11-80	065000	Classification: Whether a neck strap and textile loops on the collar of a woman's jacket are ornamental

Date of decision	File No.	Issue
6-29-80	065033	Classification: Miniature bricks used by hobbyists for use in building doll houses (532.11, 737.55, 737.95)
7-11-80	065060	Classification: Timing belt used with textile machinery (358.14, 358.16, 670.06)
6-29-80	065082	Classification: Woven cotton fabric with small amount of rayon fibers; whether wholly of cotton
6-30-80	065100	American selling price: Woman's closed-toe, closed-back, ankle-strap casual shoe with unit molded sole and corduroy upper (700.60)
6-30-80	065101	American selling price: Woman's closed-toe, closed-back, casual shoe with instep straps and rubber/plastic soles (700.60)
6-16-80	065146	Classification: Plastic whistle closure device for tube of candy (737.95)
6-30-80	065185	Classification: Air deflectors (692.27, 774.60)
6-29-80	066026	Classification: Hydraulic firebrick compacting presses (678.20)
6-30-80	066048	Classification: Hydraulic glass-forming press (678.30, 851.60)
7-11-80	066057	Classification: Luggage carriers (692.60)

International Trade Commission Notices

Investigations by the U.S. International Trade Commission

DEPARTMENT OF THE TREASURY

The appended notices relating to investigations by the U.S. International Trade Commission are published for the information of Customs officers and others concerned.

R. E. CHASEN,
Commissioner of Customs.

In the Matter of CERTAIN SPRING ASSEMBLIES AND COMPONENTS THEREOF, AND METHODS FOR THEIR MANUFACTURE	Investigation No. 337-TA-88

Notice of Investigation

Notice is hereby given that a complaint was filed with the U.S. International Trade Commission on June 23, 1980, and amended on July 8, 1980, under section 337 of the Tariff Act of 1930 (19 U.S.C. 1337) and 19 U.S.C. 1337a, on behalf of Kuhlman Corp., 2565 West Maple, Troy, Mich. 48084. The amended complaint (hereinafter referred to as the complaint) alleges unfair methods of competition and unfair acts in the importation into the United States of certain spring assemblies, or in their sale, because such spring assemblies infringe claims 1, 2, and 7–11 of U.S. Letters Patent 3,782,708, and are made in accordance with claims 1–37 of U.S. Letters Patent 3,866,287. Moreover, the complaint alleges that the effect or tendency of the unfair methods of competition and unfair acts is to destroy or substantially injure an industry, efficiently and economically operated, in the United States.

Complainant requests the Commission, following a full investigation, to order permanent exclusion from entry into the United

States of the imports in question, and to provide such other relief as the Commission deems appropriate. Complainant also requests the Commission, during the pendency of the investigation, to order temporary exclusion from entry into the United States of the imports in question.

Having considered the complaint, the Commission, on July 22, 1980, ordered that—

(1) Pursuant to subsection (b) of section 337 of the Tariff Act of 1930 (19 U.S.C. 1337), an investigation be instituted to determine whether there is reason to believe that there is a violation and whether there is a violation of subsection (a) of this section in the unauthorized importation of certain spring assemblies and components thereof into the United States, or in their sale, because such spring assemblies are alleged to be covered by claims 1, 2, and 7–11 of U.S. Letters Patent 2,782,708 and to be made in accordance with claims 1–37 of U.S. Letters Patent 3,866,287, the effect or tendency of which is to destroy or substantially injure an industry, efficiently and economically operated, in the United States;

(2) For the purposes of this investigation, the following are hereby named as parties upon which this notice of investigation shall be served:

(a) The complainant is—

Kuhlman Corp.
2565 West Maple
Troy, Mich. 48084

(b) The respondents are the following companies alleged to be engaged in the unauthorized importation of such spring assemblies into the United States, or in their sale, and are parties upon which the complaint is to be served:

P. J. Wallbank Manufacturing Co., Ltd.
P.O. Box 99, Highway 97
Plattsville, Ontario, Canada N0J 150

Ford Motor Co.
Ford World Headquarters
American Road
Dearborn, Mich. 48121

General Motors Corp.
3044 West Grand Boulevard
Detroit, Mich. 48202

(c) John Milo Bryant, Unfair Import Investigations Division, U.S. International Trade Commission, 701 E Street NW., Washington, D.C. 20436, shall be the Commission investigative attorney, a party to this investigation; and

(3) For the investigation so instituted, Donald K. Duvall, Chief Administrative Law Judge, U.S. International Trade Commission, 701 E Street NW., Washington, D.C. 20436, shall designate the presiding officer.

The phrase "and components thereof" has been added to paragraph (1) above on the basis of informal investigatory activities by the Commission, which revealed that spring assemblies of the type alleged to infringe claims 1, 2, and 7–11 of U.S. Letters Patent 3,782,708 and to be made in accordance with claims 1–37 of U.S. Letters Patent 3,866,287 can be imported in component parts as well as entirely assembled units. In addition, General Motors Corp. and the Ford Motor Co. have been included as respondents in paragraph 2(b) above on the basis of the informal investigatory activities of the Commission.

Responses must be submitted by the named respondents in accordance with section 210.21 of the Commission's Rules of Practice and Procedure (19 CFR 210.21). Pursuant to sections 201.16(d) and 210.21(a) of the rules, such responses will be considered by the Commission if received not later than 20 days after the date of service of the complaint. Extensions of time for submitting a response will not be granted unless good and sufficient cause therefor is shown.

Failure of a respondent to file a timely response to each allegation in the complaint and in this notice may be deemed to constitute a waiver of the right to appear and contest the allegations of the complaint and this notice, and to authorize the presiding officer and the Commission, without further notice to the respondent, to find the facts to be as alleged in the complaint and this notice and to enter both a recommended determination and a final determination containing such findings.

The complaint is available for inspection by interested persons at the Office of the Secretary, U.S. International Trade Commission, 701 E Street NW., Washington, D.C. 20436, and in the Commission's New York office, 6 World Trade Center, Suite 655, New York, N.Y. 10048.

By order of the Commission.

Issued: August 4, 1980.

KENNETH R. MASON,
Secretary.

Notice of Request for Public Comment on Termination of Countervailing Duty Investigation Concerning Chains and Parts Thereof of Cast Iron or Steel from Italy

AGENCY: U.S. International Trade Commission.

ACTION: Request for public comments on proposed termination of

countervailing duty investigation under section 704(a) of the Tariff Act of 1930 and section 104(b) of the Trade Agreements Act of 1979, with regard to chains and parts thereof of cast iron or steel from Italy.

EFFECTIVE DATE: Date of publication in the Federal Register.

FOR FURTHER INFORMATION CONTACT: Mr. Lynn Featherstone, Office of Investigations; telephone 202-523-1376.

SUPPLEMENTAL INFORMATION: Section 104 of the Trade Agreements Act of 1979 contains the provisions for dealing with countervailing duty orders which had been issued under section 303 of the Tariff Act of 1930 as amended (19 U.S.C. 1303) prior to January 1, 1980. Where such orders are in effect, and have not been waived, section 104(b) requires the Commission to conduct an investigation upon the request of a government or a group of exporters of merchandise covered by the order, to determine whether an industry in the United States would be materially injured, threatened with material injury, or whether the establishment of such industry in the United States would be materially retarded if the order were to be revoked. Such investigation (similar to investigations carried under title VII of the Trade Agreements Act) must be completed within 3 years of the date of its commencement (sec. 104(b)(3)).

On March 28, 1980, the Commission received a request from the delegation of the Commission of European Communities for the review of the following countervailing duty order, inter alia: Chains and parts thereof, of cast iron or steel from Italy—T.D. 77-249 (42 F.R. 54799 Oct. 11, 1977).

The Commission has also been notified by counsel for the National Association of Chain Manufacturers, the original petitioner in the case leading to these countervailing duty orders, that the association wishes to "withdraw its petition" with regard to chains and parts from Italy.

While there is no provision in the Trade Agreements Act of 1979, or in its legislative history, permitting termination of a transition case investigation, termination of a properly instituted countervailing duty investigation is permitted under section 704(a). That section directs the Commission to solicit public comment prior to termination and approve such termination only if it is in the public interest. Since termination is permitted under newly filed countervailing duty petitions, it should also be permitted in existing countervailing duty orders.

In light of the Commission's duty to consider the public interest, the Commission hereby requests written comments concerning the proposed termination of an investigation with regard to chains and

parts thereof from Italy. These written comments must be filed with the Secretary of the Commission no later than 30 days after the date of publication of this notice in the Federal Register.

By order of the Commission.

Issued: July 30, 1980.

KENNETH R. MASON,
Secretary.

Index

U.S. Customs Service

Treasury decisions: T.D. No.

Cotton textile products—Restriction on entry—Malaysia—Foreign currencies: 80-209

Daily certified rates; July 21-25, 1980 80-207

Daily certified rates; July 14-18, 1980 80-206

Daily certified rates; July 7-11, 1980 80-205

Manmade fiber textile products—Restriction on entry—Malaysia 80-208

Reimbursable services—Excess cost of preclearence operation 80-210

Customs Service decisions: C.S.D. No.

American selling price: Whether imported and domestic footwear are similar if made in dissimilar widths 80-133

American selling price: Revisions or amendments to catalogs and price lists for footwear; requirement to promptly furnish under 19 CFR 152.24 80-150

Carrier control:

Treatment of aircraft as commercial or private for Customs purposes 80-126

Whether a non-coastwise-qualified tug may engage in berthing operations within a U.S. harbor 80-131

Foreign-owned and foreign-registered truck tractor hauling truck trailer between points in the United States 80-135

Classification:

Angel figure Christmas tree ornament 80-140

Knit textile fabrics with cut pile yarns 80-141

Trademark labels, edging, belt loops and patch pockets on cotton jeans; ornamentation 80-145

Footwear with exteriors partially covered with leather 80-146

Vinyl mittens for children designed for use in skiing 80-147

Clearance: Procedure for aircraft departing a U.S. port for a foreign port via another U.S. port 80-127

Constructed value: Increase in cost of materials due to currency fluctuations 80-139

Drawback:

Whether transfer of distilled spirits to Customs bonded warehouse in an "exportation" 80-129

Use of low-to-high basis for identification for drawback under 19 CFR 22.4(f) 80-132

Whether drawback is allowable in valuable waste incurred in manufacture 80-137

Entry:
Special manifest procedure for overcarried and prematurely discharged merchandise 80-134
Waiver of production of missing documents by liquidation of entry 80-138
Export value: Section 402(b), Tariff Act of 1930, as amended; dutiability of quota charge 80-142
Generalized system of preferences: Certificate of origin form A; procedure in cases of doubtful authenticity 80-149
Marking: Acceptability of "UK" as country-of-origin marking on product made in England 80-144
Valuation: Whether lubrication fittings are finished automobile parts for purposes of the final list 80-130
Value: 19 U.S.C. 1402(e); existence of "similar" merchandise as basis of appraisement 80-128
Vessel: Prohibition against gambling devices on board U.S.-flag vessel in international waters 80-136
Vessel repairs:
Dutiability of expenses in construction of one vessel from midbody of another vessel; 19 U.S.C. 1466 80-143
Burden of proof to support remission of duties under 19 U.S.C. 1466(a); dutiability of cleaning costs 80-148
Decisions of the U.S. Court of Customs and Patent Appeals *Armstrong Bros. Tool Co. et al.* v. *The United States*, No. 80-20

Customs Court

Appeal to U.S. Court of Customs and Patent Appeals (p. —); Appeal 80-36—Stainless steel angles; angles of alloy iron or steel: drilled, punched, or otherwise advanced; not drilled, not punched, and not otherwise advanced; TSUS
Construction:
Tariff Act of 1930, section 315(d), C.D. 4866
Tariff Schedules of the United States:
General headnotes and rules of interpretation, rule 10(ij), C.D. 4866
Item 685.10, C.D. 4866
Item 708.23, C.D. 4866
Item 708.89, C.D. 4866
Schedule 7, headnote 3, part 3, C.D. 4866
United States Code, title 19, sec. 1315(d), C.D. 4866
Definitions:
Instrument, C.D. 4866
Lens, C.D. 4866
Mount, C.D. 4866
Mounted, C.D. 4866
"Finding" made after alleged change in practice; Tariff Act of 1930, sec. 315(d), C.D. 4866
General interpretative rule 10(ij); parts of television cameras, C.D. 4866
"Instrument" defined; optical instruments, C.D. 4866
Lexicographic sources:
Webster's New International Dictionary (2d ed. 1950), C.D. 4866
Webster's New World Dictionary of the American Language, College Edition (1962), C.D. 4866

"More than":
A mounted lens; Varotal 30 system, C.D. 4866
Doctrine; mounted lenses, C.D. 4866
Mounted:
Lens; optical instrument, C.D. 4866
Lenses; "more than" doctrine, C.D. 4866
Optical:
Appliances and instruments, C.D. 4866
Instrument; mounted lens, C.D. 4866
Instruments:
"Instrument" defined, C.D. 4866
Statutory definition (TSUS), C.D. 4866
Parts of television cameras; general interpretative rule 10(ij), C.D. 4866
Rehearing motion applied for (p. —); memorandum opinion and order granting defendant's motion to dismiss
Statutory definition (TSUS); optical instruments, C.D. 4866
Tariff Act of 1930, sec. 315(d); "finding" made after alleged change in practice, C.D. 4866
Television camera lens system; optical appliances and instruments, C.D. 4866
Varotal 30 system; "more than" a mounted lens, C.D. 4866
Words and phrases:
Finding of an established and uniform practice, C.D. 4866
Instrument, C.D. 4866
Lens, C.D. 4866
More than a mounted lens, C.D. 4866
Mount, C.D. 4866
Mounted, C.D. 4866
Mounted lens, C.D. 4866
Optical instrument, C.D. 4866

U.S. GOVERNMENT PRINTING OFFICE : 1980 O - 324-903

SEP 8 1980 Stem 950-D T 1.11/3:14/36

Customs Bulletin

Regulations, Rulings, Decisions, and Notices concerning Customs and related matters

and Decisions

of the United States Court of Customs and Patent Appeals and the United States Customs Court

376-863
375
Cont 9247

Vol. 14 SEPTEMBER 3, 1980 No. 36

This issue contains

T.D. 80–211 through 80–215
General Notices
C.A.D. 1253
C.D. 4867
Protest abstracts 80 P/119
Reap. abstracts 80 R/232 through 80 R/251
International Trade Commission Notices

THE DEPARTMENT OF THE TREASURY
U.S. Customs Service

NOTICE

The abstracts, rulings, and notices which are issued weekly by the U.S. Customs Service are subject to correction for typographical or other printing errors. Users may notify the U.S. Customs Service, Logistics Management Division, Washington, D.C. 20229, of any such errors in order that corrections may be made before the bound volumes are published.

For sale by the Superintendent of Documents, U.S. Government Printing Office, Washington, D.C. 20402. Price: $2.25 (single copy domestic); $2.85 (single copy foreign). Subscription price: $85.00 a year domestic; $106.25 a year foreign.

U.S. Customs Service

Treasury Decisions

(T.D. 80-211)

Cotton, Wool, and Manmade Fiber Textile Products—Restriction on Entry

Restriction on entry of cotton, wool, and manmade fiber textile products manufactured or produced in Colombia

There is published below a directive of June 30, 1980, received by the Commissioner of Customs from the acting chairman, Committee for the Implementation of Textile Agreements, concerning restriction on entry of cotton, wool, and manmade fiber textile products in certain categories manufactured or produced in Colombia.

This directive was published in the Federal Register on July 3, 1980 (45 F.R. 45341), by the committee.

(QUO-2-1)

Dated: August 13, 1980.

WILLIAM D. SLYNE,
(For Richard R. Rosettie, Acting
Director, Duty Assessment Division).

U.S. DEPARTMENT OF COMMERCE,
INTERNATIONAL TRADE ADMINISTRATION,
Washington, D.C., June 30, 1980.

Committee for the Implementation of Textile Agreements

COMMISSIONER OF CUSTOMS,
Department of the Treasury,
Washington, D.C.

DEAR MR. COMMISSIONER: Under the terms of the Arrangement Regarding International Trade in Textiles done at Geneva on December 20, 1973, as extended on December 14, 1977; pursuant to the

Bilateral Cotton, Wool and Manmade Fiber Textile Agreement of August 3, 1978, as amended, between the Governments of the United States and Colombia; and in accordance with the provisions of Executive Order 11651 of March 3, 1972, as amended by Executive Order 11951 of January 6, 1977, you are directed to prohibit, effective on July 1, 1980, and for the 12-month period extending through June 30, 1981, entry into the United States for consumption and withdrawal from warehouse for consumption of cotton, wool, and manmade fiber textile products, exported from Colombia in the following categories, in excess of the indicated 12-month levels of restraint:

Category	*12-Month Level of Restraint*	
320	7, 000, 000	square yards
443	11, 519	dozen
444	1, 852	dozen
633	75, 905	dozen
641	136, 424	dozen
650	13, 725	dozen
666	128, 205	pounds

In carrying out this directive, entries of cotton, wool, and manmade fiber textile products in the foregoing categories, produced or manufactured in Colombia, which have been exported to the United States before July 1, 1980, shall, to the extent of any unfilled balances, be charged against the levels of restraint established for such goods during the 12-month period beginning on July 1, 1979, and extending through June 30, 1980. In the event the levels of restraint established for that period have been exhausted by previous entries, such goods shall be subject to the levels set forth in this letter.

The levels of restraint set forth above are subject to adjustment in the future according to the provisions of the bilateral agreement of August 3, 1978, as amended, between the Governments of the United States and Colombia, which provide, in part, that: (1) Within the applicable group limits of the agreement, specific levels of restraint may be exceeded by designated percentages; (2) these same levels may also be increased for carryover and carryforward up to 11 percent of the applicable category limit; (3) certain consultation levels may be increased within the applicable group limits upon agreement between the two governments; and (4) administrative arrangements or adjustments may be made to resolve minor problems arising in the implementation of the agreement. Any appropriate adjustment under the provisions of the bilateral agreement referred to above will be made to you by letter.

A detailed description of the textile categories in terms of TSUSA numbers was published in the Federal Register on February 28, 1980 (45 F.R. 13172), as amended on April 23, 1980 (45 F.R. 27463).

In carrying out the above directions, entry into the United States for consumption shall be construed to include entry for consumption into the Commonwealth of Puerto Rico.

The actions taken with respect to the Government of Colombia and with respect to imports of cotton, wool and manmade fiber textile products from Colombia have been determined by the Committee for the Implementation of Textile Agreements to involve foreign affairs functions of the United States. Therefore, the directions to the Commissioner of Customs, which are necessary to the implementation of such actions, fall within the foreign affairs exception to the rulemaking provisions of 5 U.S.C. 553. This letter will be published in the Federal Register.

Sincerely,

ARTHUR GAREL,
Acting Chairman, Committee for the Implementation of Textile Agreements.

(T.D. 80-212)

Florasynth, Inc.

Notice of recordation of trade name

On June 11, 1980, there was published in the Federal Register (45 F.R. 39609) a notice of application for the recordation under section 42 of the act of July 5, 1946, as amended (15 U.S.C. 1124), of the trade name Florasynth, Inc. The notice advised that prior to final action on the application, filed pursuant to section 133.12, Customs Regulations (19 CFR 133.12), consideration would be given to relevent data, views, or arguments submitted in opposition to the recordation and received not later than 30 days from the date of publication of the notice.

The name "Florasynth, Inc." is hereby recorded as the trade name of Florasynth, Inc., a corporation organized under the laws of the State of New York, located at 410 East 62d Street, New York, N.Y. 10021, when applied to essences and aromatic ingredients used as bases for cosmetics, toilet preparations, perfumes, and colognes, and as flavor in foods, beverages, and tobacco products; essential oils, used as an odorant to mask disinfectants, insecticides, and similar products; extracts, flavors, oils, and emulsions for use in making soft drink

syrups and bases; nonalcoholic preparation for producing a foam in soft drinks and a flavoring agent used in the preparation of root beer; orange compound adapted to produce a cloud in nonalcoholic, maltless soft drink beverages and having flavoring ingredients; natural and synthetic organic flavors, extracts, oils, and blenders for alcoholic beverages; imitation vanilla bean flavor; grapefruit juice powder, lemon juice powder, lime juice powder, orange juice powder, and brown sugar powdered flavor; citrus oils for food purposes; onion powder and garlic powder; and coffee, manufactured in Brazil, Canada, England, France, Japan, Mexico, and the United States. Various foreign subsidiaries are authorized to use the trade name.

Dated: August 14, 1980.

SALVATORE E. CARAMAGNO,
Director, Office of Regulations and Rulings.

(T.D. 80–213)

Bonds

Approval and discontinuance of carriers bonds, Customs form 3587

Bonds of carriers for the transportation of bonded merchandise have been approved or discontinued as shown below. The symbol "D" indicates that the bond previously outstanding has been discontinued on the month, day, and year represented by the figures which follow. "PB" refers to a previous bond, dated as represented by figures in parentheses immediately following, which has been discontinued. If the previous bond was in the name of a different company or if the surety was different, the information is shown in a footnote at the end of the list.

Dated: August 1, 1980.

Name of principal and surety	Date of bond	Date of approval	Filed with district director/area director/amount
C & C Trucking Co., 3414 Kiesthill, Dallas, TX; motor carrier; The Travelers Indemnity Co. D 6/25/80	Jan. 24, 1972	Feb. 28, 1972	Laredo, TX; $25,000
Calore Freight System, Inc. (A Rhode Island Corp.) And Its Division Thereof: P.P.D. Co., 275 Pine St., Seekonk, MA; motor carrier; American Casualty Co. of Reading, PA	July 22, 1980	July 22, 1980	New York Seaport, NY; $50,000.
Checker Express Co. 6801 S. 13th St., Milwaukee. WI; motor carrier; St. Paul Fire & Marine Ins. Co. D 6/20/80	Feb. 14, 1979	Mar. 12, 1979	Milwaukee, WI; $25,000

Name of principal and surety	Date of bond	Date of approval	Filed with district director/area director/amount
Hercules Trucking Co., Inc., 999 Pontiac Ave., Cranston, Rhode Island; motor carrier; Peerless Ins. Co. D 7/18/80	Nov. 1, 1975	Nov. 1, 1975	Providence, R.I.; $25,000
Holland Motor Express, 720 E. Fortieth St., Holland, MI; motor carrier; Peerless Ins. Co.	Mar. 15, 1979	May 18, 1979	Detroit, MI; $50,000
Ideal Truck Lines, Inc., P.O. Box 330, Norton, Kansas; motor carrier; The Western Casualty and Surety Co.	May 21, 1980	July 3, 1980	El Paso, TX; $25,000
Puget Sound Tug & Barge Co., Alaska Hydrotrain, North Star Forwarding Co., Caribe Hydro-Trailer, Inc., Puerto Rico Marine Lines, Inc., P.O. Box 3783, Seattle, WA; water carrier; Peerless Ins. Co. D 6/10/80	Dec. 6, 1976	Dec. 6, 1976	Seattle, WA; $50,000
Red Star Marine Services Inc., 500 5th Ave., New York, N.Y.; water carrier; The North River Ins. Co. D 7/16/80	May 21, 1976	June 2, 1976	New York Seaport, N.Y.; $100,000
Stair Cargo Services, Inc., 9020 N.W. 12 St., Miami, FL; motor carrier; St. Paul Fire and Marine Ins. Co.	June 10, 1980	June 23, 1980	Miami, FL; $50,000
Sundance Freight Lines, Inc. d/b/a Sundance Transportation, P.O. Box 7676, Phoenix, AZ; motor carrier; Transport Idemnity Co. D 7/30/80	Jan. 30, 1978	Feb. 27, 1978	El Paso, TX; $25,000
Superior Transfer, Inc., 56 Peble Drive, Brooklyn Park, MD; motor carrier; St. Paul Fire & Marine Ins. Co. (PB 12/7/78) D 7/6/80	June 18, 1980	July 6, 1980	Baltimore, MD; $25,000
Western Lines, Inc., P.O. Box 1145, Houston, TX; motor carrier; United States Fidelity & Guaranty Co. (PB 7/15/75) D 7/16/80 [1]	May 1, 1980	July 16, 1980	Houston, TX; $50,000

[1] Surety is Hartford Accident & Indemnity Co.

BON-3-03

ALFRED G. SCHOLLE,
Director, Carriers, Drawback, and Bonds Division.

(T.D. 80–214)

Bonds

Approval and discontinuance of bonds on Customs form 7587 for the control of instruments of international traffic of a kind specified in section 10.41a of the Customs Regulations

Bonds on Customs form 7587 for the control of instruments of international traffic of a kind specified in section 10.41a of the Customs Regulations have been approved or discontinued as shown below. The symbol "D" indicates that the bond previously outstanding has been discontinued on the month, day, and year represented by the figures which follow. "PB" refers to a previous bond, dated as represented by the figures in parentheses immediately following which has been discontinued. If the previous bond was in the name of a different company or if the surety was different, the information is shown in a footnote at the end of the list.

Dated: August 15, 1980.

Name of principal and surety	Date of bond	Date of approval	Filed with district director/area director/amount
Luciano S. Soto; dba Brenco Customs Brokers, 1208 Flores St., Laredo, TX; St. Paul Fire & Marine Ins. Co.	July 8, 1980	July 8, 1980	Laredo, TX; $15,000
Burlington Industries Inc., 3330 W. Friendly Ave., Greensboro, N.C.; Federal Ins. Co.	June 10, 1980	June 12, 1980	New York Seaport, N.Y.; $10,000
Caribbean Cement Carriers Corp., G.P.O. Box 4487, San Juan, PR; Puerto Rican-American Ins. Co. D 6/2/80	Mar. 13, 1979	Mar. 28, 1979	San Juan, PR; $10,000
Dart Orient Services Inc., 5 World Trade Center, New York, N.Y.; Old Republic Insurance Co. (PB 7/3/75) D 7/3/80 [1]	July 1, 1980	July 2, 1980	New York Seaport, N.Y. $10,000
Inter-Island Agencies Inc., (a Subsidiary of Mc Allister Bros. Inc. New York) P.O. Box 2895, San Juan, Puerto Rico; Aetna Ins. Co. D 6/12/80	June 10, 1976	June 26, 1976	San Juan, PR; $25,000
Lavino Shipping Agencies, Inc., 3 Penn Center Plaza, Phil., PA; The Home Indemnity Co.	Mar. 20, 1980	Apr. 3, 1980	Philadelphia, PA; $10,000
Overseas Shipping Co., One California St., San Francisco, CA; Safeco Insurance Co. of America D 8/12/80	Aug. 4, 1978	Aug. 4, 1978	San Francisco CA; $50,000
The Papua New Guinea Shipping Corp. (Pty) Ltd. (a foreign corp.) c/o TFC Shipping, 100 California Street, San Francisco, CA; Washington International Ins. Co.	June 25, 1980	June 26, 1980	San Francisco, CA; $50,000

See footnotes at end of table.

Name of principal and surety	Date of bond	Date of approval	Filed with district director/area director/amount
RCA Corporation, 30 Rockefeller Plaza, N.Y., N.Y.; Federal Insurance Co.; Federal Ins. Co.	June 24, 1980	July 22, 1980	El Paso, TX; $20,000
Refricentro, Inc., 380 Barbosa Ave., Hato Rey, P.R.; Peerless Ins. Co. D 6/2/80	May 6, 1976	May 6, 1976	San Juan, PR; $20,000
Rijbatainer Inc., 124 Fairfield Rd., Fairfield, New Jersey; Investors Ins. Co. of America	June 20, 1980	June 20, 1980	New York, N.Y.; $10,000
J.J. Ryan and Sons, Inc. (A Delaware Corp.) 19 South Irvine St., P.O. Box 10221, Greenville, S.C.; Investors Ins. Co. of America (PB 6/12/72) D 6/17/80 [2]	June 18, 1980	June 23, 1980	Wilmington, N.C.; $10,000
Seabrook Foods, Inc., (a GA Corp.), Alamo, TX; Liberty Mutual Ins. Co. D 5/10/80	May 10, 1979	May 30, 1979	Laredo, TX; $10,000
Seven-up Bottling Co., Inc., P.O. Box 38, Bayamon, PR; Federal Ins. Co. D 6/6/80	Feb. 4, 1977	Feb. 22, 1977	San Juan, PR; $10,000

[1] Principal is Dart Container Line, Inc.; Surety is Peerless Ins. Co.
[2] Surety is St. Paul Fire and Marine Ins. Co.

BON-3-10

ALFRED G. SCHOLLE,
Director, Carriers, Drawback, and Bonds Division.

(T.D. 80-215)

Foreign Currencies—Daily Rates for Countries Not on Quarterly List

Rates of exchange based on rates certified to the Secretary of the Treasury by the Federal Reserve Bank of New York for the Brazil cruzeiro, People's Republic of China yuan, Hong Kong dollar, Iran rial, Philippines peso, Singapore dollar, Thailand baht (tical), and Venezuela bolivar

The Federal Reserve Bank of New York, pursuant to section 522(c), Tariff Act of 1930, as amended (31 U.S.C. 372(c)), has certified buying rates for the dates and foreign currencies shown below. The rates of exchange, based on these buying rates, are published for the information and use of Customs officers and others concerned pursuant to part 159, subpart C, Customs Regulations (19 CFR 159, subpart C).

326-863 O - 80 - 2

Brazil cruzeiro:	
July 28–August 1, 1980	$0.0187
People's Republic of China yuan:	
July 28, 1980	$0.688895
July 29, 1980	.685495
July 30, 1980	.681385
July 31, 1980	.678012
August 1, 1980	.675995
Hong Kong dollar:	
July 28, 1980	$0.202922
July 29, 1980	.202860
July 30, 1980	.202593
July 31, 1980	.202061
August 1, 1980	.202572
Iran rial:	
July 28–August 1, 1980	Not Available
Philippines peso:	
July 28–31, 1980	$0.1345
August 1, 1980	.1327
Singapore dollar:	
July 28, 1980	$0.471921
July 29, 1980	.471365
July 30, 1980	.469925
July 31, 1980	.467399
August 1, 1980	.467071
Thailand baht (tical):	
July 28–August 1, 1980	$0.0490
Venezuela bolivar:	
July 28–August 1, 1980	$0.2329

(LIQ-3-TRODE)

Dated: August 12, 1980.

G. Scott Shreve
(For Richard Rosettie, Acting
Director Duty Assessment Division).

ERRATUM

In CUSTOMS BULLETIN No. 31, dated July 30, 1980, volume 14, in T.D. 80–186 the attached notice dated June 6, 1980 that should have followed T.D. 80–186 was erroneously omitted.

In CUSTOMS BULLETIN No. 31, dated July 30, 1980, volume 14, the attached notice that should have followed T.D. 80–191 was erroneously omitted.

CUSTOMS BULLETIN No. 32, volume 14, and No. 33, volume 14, were both dated August 6, 1980. No. 33 should be dated August 13, 1980.

U.S. DEPARTMENT OF COMMERCE,
INTERNATIONAL TRADE ADMINISTRATION,
Washington, D.C., June 6, 1980.

Committee for the Implementation of Textile Agreements

COMMISSIONER OF CUSTOMS,
Department of the Treasury,
Washington, D.C.

DEAR MR. COMMISSIONER: This directive amends, but does not cancel, the directive issued to you on June 26, 1979, by the chairman, Committee for the Implementation of Textile Agreements, concerning imports into the United States of certain cotton, wool, and manmade fiber textile products, produced or manufactured in Colombia.

Under the terms of the Arrangement Regarding International Trade in Textiles done at Geneva on December 20, 1973, as extended on December 15, 1977; pursuant to the Bilateral Cotton, Wool and Manmade Fiber Textile Agreement of August 3, 1978, as amended, between the Governments of the United States and Colombia; and in accordance with the provisions of Executive Order 11651 of March 3, 1972, as amended by Executive Order 11951 of January 6, 1977, you are directed to prohibit, effective on June 11, 1980 and for the 12-month period beginning on July 1, 1979, and extending through June 30, 1980, entry into the United States for consumption and withdrawal from warehouse for consumption of manmade fiber textile products in category 650, produced or manufactured in Colombia in excess of 13,725 dozen.[1]

[1] The level of restraint has not been adjusted to reflect any imports after June 30, 1979. Imports during the July 1979–March 1980 period have amounted to 10,083 dozen.

Textile products in category 650 which have been exported to the United States prior to July 1, 1979, shall not be subject to this directive.

Textile products in category 650 which have been released from the custody of the U.S. Customs Service under the provisions of 19 U.S.C. 1448(b) or 1484(a)(1)(A) prior to the effective date of this directive shall not be denied entry under this directive.

A detailed description of the textile categories in terms of TSUSA numbers was published in the Federal Register on February 28, 1980 (45 F.R. 13172), as amended on April 23, 1980 (45 F.R. 27463).

In carrying out the above directions, entry into the United States for consumption shall be construed to include entry for consumption into the Commonwealth of Puerto Rico.

The action taken with respect to the Government of Colombia and with respect to imports of manmade fiber textile products from Colombia has been determined by the Committee for the Implementation of Textile Agreements to involve foreign affairs functions of the United States. Therefore, the directions to the Commissioner of Customs, which are necessary for the exception to the rulemaking provisions of 5 U.S.C. 553. This letter will be published in the Federal Register.

Sincerely,

ARTHUR GAREL,
Acting Chairman, Committee for the Implementation of Textile Agreements.

U.S. DEPARTMENT OF COMMERCE,
INTERNATIONAL TRADE ADMINISTRATION,
Washington, D.C., June 25, 1980.

Committee for the Implementation of Textile Agreements

COMMISSIONER OF CUSTOMS,
Department of the Treasury,
Washington D.C.

DEAR MR. COMMISSIONER: This directive further amends, but does not cancel, the directive issued to you on December 21, 1979, by the chairman, Committee for the Implementation of Textile Agreements, concerning imports into the United States of certain cotton, wool, and manmade fiber textile products, produced or manufactured in India.

Under the terms of the Arrangement Regarding International Trade in Textiles done at Geneva on December 20, 1973, as extended on December 15, 1977; pursuant to the Bilateral Cotton, Wool and Man-

made Fiber Textile Agreement of January 9 and 21, 1978, as amended, between the Governments of the United States and India; and in accordance with the provisions of Executive Order 11951 of January 6, 1977, you are directed, effective on June 30, 1980, and for the 12-month period beginning on January 1, 1980, and extending through December 31, 1980, to amend the directive of December 21, 1979, to include a level of restraint for cotton textile products in category 351 and increase levels for cotton and manmade fiber textile products in categories 359 and 666, produced or manufactured in India, as follows:

Category	*12-month level of restraint* [1]
351 (visaed)	24, 038 dozen
359 (visaed)	869, 565 pounds
666 (visaed)	1, 025, 641 pounds

[1] The levels of restraint have not been adjusted to reflect any imports after Dec. 31, 1979.

Cotton textile products in category 351 which have been released from the custody of the U.S. Customs Service under the provisions of 19 U.S.C. 1448(b) or 1484(a)(1)(A) prior to the effective date of this directive shall not be denied entry under this directive.

The action taken with respect to the Government of India and with respect to imports of cotton and manmade fiber textile products from India has been determined by the Committee for the Implementation of Textile Agreements to involve foreign affairs functions of the United States.

Therefore the directions to the Commissioner of Customs which are necessary for the implementation of such actions, fall within the foreign affairs exception to the rulemaking provisions of 5 U.S.C. 553. This letter will be published in the Federal Register.

Sincerely,

ARTHUR GAREL,
Acting Chairman, Committee for the Implementation of Textile Agreements.

U.S. Customs Service

General Notices

(521851)

Extension of Time for Comments Concerning Courier Services; Invitation to the Public to Comment

AGENCY: U.S. Customs Service, Department of the Treasury.

ACTION: Notice of extension of time for comments.

SUMMARY: This notice extends the period of time permitted for the submission of comments in response to a notice published in the Federal Register on June 19, 1980 (45 F.R. 41565), inviting the public to comment on Customs handling of importations by courier services. Comments were to have been received on or before August 18, 1980. This extension will permit the preparation and submission of more detailed comments by interested members of the public.

DATES: Comments must be received on or before September 18, 1980.

ADDRESS: Comments, preferably in triplicate, should be addressed to the Commissioner of Customs, attention: Regulations and Research Division, room 2426, U.S. Customs Service, 1301 Constitution Avenue NW., Washington, D.C. 20229.

FOR FURTHER INFORMATION CONTACT: Harold Loring, Regulations and Research Division, U.S. Customs Service, 1301 Constitution Avenue NW., Washington, D.C. 20229; 202-566-8237.

Dated: August 14, 1980.

DONALD W. LEWIS,
Director, Office of
Regulations and Rulings.

[Published in the Federal Register, Aug. 22, 1980 (45 F.R. 56221)]

Disclosure of Information on Export Documents; Shipper's Certification of Confidentiality

AGENCY: U.S. Customs Service, Department of the Treasury.

ACTION: General notice.

SUMMARY: This notice advises the exporting community of the provisions of a new law which changes the procedures a shipper must follow in order to request that Customs not disclose to the public the shipper's name and address from documents submitted to Customs in connection with exports from the United States. Customs will publish a final rule document at a later date amending the Customs Regulations to implement those procedural changes.

FOR FURTHER INFORMATION CONTACT: Doris B. Robinson, Freedom of Information and Privacy Branch, Office of Regulations and Rulings, U.S. Customs Service, 1301 Constitution Avenue NW., Washington, D.C. 20229; 202-566-8681.

SUPPLEMENTARY INFORMATION:

BACKGROUND

Public Law 96-275, which was published as T.D. 80-184 in the CUSTOMS BULLETIN of July 23, 1980, an act "to protect the confidentiality of Shippers' Export Declarations and to standardize export data submission and disclosure requirements," was enacted by Congress on June 17, 1980. The provisions of that law relating to disclosure of information became effective August 1, 1980.

Section 2 of the law provides that the name and address of a shipper contained in an outward foreign manifest or documents attached to the manifest will be subject to public disclosure unless the shipper has made a biennial (every 2 years) certification to Customs claiming confidential treatment for that information.

NEW CUSTOMS PROCEDURES

To implement the many changes required by the law, Customs will amend its regulations contained in title 19, Code of Federal Regulations chapter I (19 CFR, chapter I), in a final rule document to be published in the Federal Register at a later date. However, as regards the new certification requirement imposed by the law, Customs considers it advisable to notify members of the exporting community of changes in disclosure of information procedures by this document.

Effective August 1, 1980, if a shipper wishes to request confidential treatment by Customs of his/her name and address, the following procedures will be used:

1. A shipper, or authorized employee or official of the shipper, must submit a certification claiming confidential treatment of the shipper's name and address.

2. There is no prescribed format for a certification.

3. The certification must be submitted to the Regional Commissioner for the region in which the port of exportation is located.

4. Each certification will be valid for a period of 2 years from the date of its submission to Customs.

EXISTING SHIPPER'S CLAIMS FOR CONFIDENTIALITY

A shipper who, before August 1, 1980, had applied for and obtained Customs approval of a claim for confidential treatment of the shipper's name, must submit to Customs a new "certification" claiming confidentiality of the shipper's name and address if desired, following the procedure described above. However, claims of confidentiality made by a shipper and already approved by Customs will continue in effect until 60 days after the publication in the Federal Register of the final rule document (Treasury decision) amending the Customs Regulations to implement the new law.

DRAFTING INFORMATION

The principal author of this document was Todd J. Schneider, Regulations and Research Division, Office of Regulations and Rulings. However, personnel from other Customs offices participated in its development.

Dated: August 13, 1980.

R. E. CHASEN,
Commissioner of Customs.

[Published in the Federal Register, Aug. 20, 1980 (45 F.R. 55559)]

(19 CFR Part 123)

Customs Relations with Canada and Mexico

Proposed amendments to part 123, Customs Regulations, relating to United States and Canada intransit truck procedures

AGENCY: U.S. Customs Service, Department of the Treasury.

ACTION: Proposed rule.

SUMMARY: Trucks proceeding between points in the United States may cross the United States-Canada border, use Canadian highways, and then reenter the United States and proceed to their destination.

This document proposes to amend the Customs Regulations to require the driver of a truck carrying merchandise between points in the United States, via Canada, to present a manifest (an itemized listing of the shipment), for validation by U.S. Customs at the U.S. port of departure. The driver would then be required to present the validated manifest to Canadian Customs at the Canadian ports of entry and exit and to U.S. Customs at the port of reentry into the United States. At present, the manifest is required to be presented at the U.S. port of reentry but not at the port of departure. This change would enable U.S. Customs at the port of departure to verify the contents of shipments covered by the manifest so as to insure the payment of duties and taxes and compliance with applicable laws and regulations when the truck reenters the United States. Conforming amendments also are proposed because of similar changes in Canadian Customs procedures concerning truck shipments proceeding between points in Canada via the United States. The amendments are considered to be significant.

DATES: Comments must be received on or before (60 days from date of publication in the Federal Register).

ADDRESS: Comments (preferably in triplicate) may be addressed to the Commissioner of Customs, attention: Regulations and Research Division, U.S. Customs Service, 1301 Constitution Avenue NW., room 2335, Washington, D.C. 20229.

FOR FURTHER INFORMATION CONTACT: Legal aspects: Benjamin H. Mahoney, Entry Procedures and Penalties Division, 202–566–5778; operational aspects: J. Bradley Lund, Inspection and Control Division, 202–566–5354, U.S. Customs Service, 1301 Constitution Avenue NW., Washington, D.C. 20229.

SUPPLEMENTARY INFORMATION:

BACKGROUND

Because of the geographic, highway, and climatic conditions along the United States-Canadian border, use of a Canadian route to transport merchandise by truck between points in the United States is a common occurrence. In these circumstances, the merchandise merely is being transported through Canada; there is no intent to export it from the United States. To process this type of movement, section 123.41, Customs Regulations (19 CFR 123.41), provides a simplified Customs procedure which allows for the reentry of merchandise into the United States without filing a Customs entry and paying duty, while at the same time protecting the revenue of the United States.

326-863 O - 80 - 3

Under present procedures, a manifest on United States-Canada Transit Manifest, Customs Form 7512–B Canada 8–1/2, an itemized list of merchandise being transported, is presented to Canadian Customs officers at the Canadian port of arrival by the driver of a truck carrying shipments of merchandise between points in the United States through Canada. Upon compliance with Canadian Customs regulations, the shipment is sealed, unless sealing is waived by Canadian Customs, and the driver is allowed to proceed through Canada. At the Canadian port exit, the driver presents the manifest to Canadian Customs officers to verify that the seals are intact or, if sealing has been waived, that there are no irregularities. This insures that no changes have been made in the shipment. After verification and certification of the manifest, the driver is allowed to proceed to the U.S. port of reentry where he presents the certified copy of the manifest to U.S. Customs officers. If they are satisfied that the shipment contains only merchandise which moved on the truck from the United States through Canada, the truck is allowed to reenter the United States without filing a Customs entry and paying duty.

This procedure, which was implemented with the cooperation of Canadian Customs and is similar to the procedure they use for truck shipments proceeding between points in Canada via the United States was designed to protect the revenue of both countries while not delaying unnecessarily the transportation of merchandise.

However, it has come to the attention of U.S. Customs that, in certain circumstances, the revenue may not be protected because foreign merchandise may be imported into the United States without duty being paid. For example, under section 123.31, Customs Regulations (19 CFR 123.31), merchandise may be transported in transit across the United States between Canada and Mexico under the procedures set forth in part 18, Customs Regulations (19 CFR, part 18), for merchandise entered for transportation and exportation. Using these procedures, a shipment of foreign merchandise from Mexico destined for Canada may be transported under bond on a transportation and exportation entry (T. & E.) by truck through the United States and exported to Canada. Because the merchandise is not entering the commerce of the United States, the truck driver need not file a formal U.S. Customs entry and pay duty. However, it has been found that after the T. & E. is closed by U.S. Customs officers at the U.S. port of exit and the bond canceled, some truck drivers then have presented a manifest on Customs Form 7512–B Canada 8–1/2 to Canadian Customs at a Canadian port of arrival. By following the procedures under section 123.41, foreign merchandise transported through the United States from Mexico to Canada is shown on the manifest as merely being transported by truck from

point to point in the United States through Canada and then is reentered into the United States without an entry having been filed and duty paid. In addition to creating a situation that allows the United States to be deprived of the revenue due on this foreign merchandise, the present wording of section 123.41 may allow persons to bring narcotics and other contraband into the United States.

Accordingly, on December 9, 1976, a notice was published in the Federal Register (41 F.R. 53810) of a proposal to amend section 123.41(a) to require the driver of a truck carrying shipments of merchandise between points in the United States through Canada to present a manifest on Customs Form 7512–B Canada 8–1/2 to U.S. Customs officers at the U.S. port of departure. This would allow U.S. Custom officers there to validate the manifest for shipments of merchandise transiting Canada by truck from point to point in the United States. A manifest on Customs Form 7512–B Canada 8–1/2 would not be presented for validation if the merchandise covered by the manifest arrives at the U.S. port of departure for export. Without a validated manifest, Canadian Customs officers at the Canadian port of entry would not permit the truck shipment to transit Canada from point to point to return to the United States. This procedure would insure that foreign merchandise is not reentered into the United States without the filing of an entry and payment of duties.

Interested parties were given until January 10, 1977, to submit data, views, or arguments regarding this proposal. A discussion of the substantive comments received in response to that notice follows.

DISCUSSION OF COMMENTS

1. While stating that it agreed with the purpose of the proposed amendment, a United States-Canada bonded carrier noted that shipments often are tendered for movement on short notice after regular office hours. It stated that if the proposal were adopted, manifests would have to be prepared in its terminal office and sent by courier to the place where the truck would be waiting at the United States-Canada border with the shipment. It stated that this delay would cause an additional expense that would have to be absorbed by the carrier.

As an alternative, this commenter suggested that U.S. Customs at the U.S. port of departure could validate the driver's bill of lading rather than the Customs Form 7512–B Canada 8–1/2. It further suggested that the bill of lading be sealed in a special envelope to be opened and reviewed by U.S. Customs at the port of reentry into the United States. It suggested that if a truck were not inspected by

U.S. Customs at the port of departure, it could be refused subsequent reentry to the United States.

Customs believes that this carrier's logistical problem of getting the Customs Form 7512–B Canada 8–1/2 from its terminal to the driver could be solved with appropriate planning. As to its suggested alternative, additional problems could be created by requiring a bill of lading to be presented to Customs for validation because it is not an official Customs document.

It is also noted that Canadian Customs is planning to adopt similar procedural changes for truck shipments proceeding between points in Canada via the United States. Customs does not believe a change as suggested would be beneficial to continued cooperation of United States and Canadian Customs in this manner.

2. Another commenter suggested that the proposed requirement—that trucks transiting Canada while proceeding between points in the United States stop at the U.S. port of departure—be extended to include all trucks departing from the United States. It claimed that this extention would assist in preventing truck drivers from neglecting to file with U.S. Customs documentation relating to the exportation of articles temporarily imported into the United States under bond. The commenter believes that this change would eliminate claims for liquidated damages assessed against importers for failure to cancel temporary importation bond entries when the claim is assessed merely for the failure of the driver to file the necessary documentation for cancellation of the bond at the port of departure.

Customs believes that to require all trucks to stop at U.S. ports of departure would create traffic problems at the Canadian border that would not be justified by the limited benefits to be derived.

3. Another carrier expressed concern that because the proposed section 123.41(a) refers to "sealable truckload" shipments, it could be inferred that open exposed flatbed or low-side flatbed trucks could not utilize the procedures in this section of the regulations. However, subpart E of part 123, Customs Regulations, is applicable to truck shipments transiting Canada and truck shipments transiting the United States regardless of whether the truck is sealable or nonsealable. Accordingly, all trucks with merchandise transiting Canada from point to point in the United States and all trucks with merchandise transiting the United States from point to point in Canada may utilize this procedure. Under the proposal, the driver of each truck transiting Canada, whether sealable or nonsealable, would be required to present the manifest to U.S. Customs at the U.S. port of departure for review and validation prior to entry into Canada. The language in the initial proposal has been revised to clarify this point.

OTHER CHANGES

After consideration of all the comments and further review of this matter with representatives of Canadian Customs, it has been determined that adoption of the proposed amendments would be in the best interests of protecting the revenue and in preventing the unlawful importation of narcotics and other contraband. However, adoption of the amendments would necessitate certain changes in the procedures followed by U.S. Customs officers concerning presentation of Customs Form 7512–B Canada 8–1/2 which were not included in the proposal to amend section 123.41. Furthermore, it also would be necessary to make conforming amendments to section 123.42, Customs Regulations (19 CFR 123.42), concerning the procedures used by Canadian Customs for truck shipments transiting the United States while proceeding between points in Canada.

Canadian Customs also is concerned with its present in-transit procedures and the potential loss of its revenue. Therefore, in cooperation with U.S. Customs, it plans to change its procedures to require the presentation of a United States-Canada Transit Manifest, Customs Form 7512–B Canada 8–1/2, for validation by Canadian Customs at the Canadian port of departure for truck shipments transiting the United States from point to point in Canada. The change in Canadian Customs procedures would be effective on the same date as the changes in U.S. Customs procedures. Accordingly, it would be necessary to amend section 123.42 to reflect the changes in Canadian Customs requirements and procedures.

In addition to the above changes, a number of minor editorial and stylistic changes would be needed to clarify the regulations.

In view of the foregoing, a new notice is being issued to allow any interested party an opportunity to comment on the revised proposed amendments.

DRAFTING INFORMATION

The principal author of this document was Charles D. Ressin, Regulations and Research Division, Office of Regulations and Rulings, U.S. Customs Service. However, personnel from other Customs offices participated in its development.

COMMENTS

Before adopting this proposal, consideration will be given to any written comments submitted to the Commissioner of Customs. Comments submitted will be available for public inspection in accordance with section 103.3(b), Customs Regulations (19 CFR 103.8(b)), during regular business hours at the Regulations and Research Division, room 2335, Headquarters, U.S. Customs Service, 1301 Constitution Avenue NW., Washington, D.C. 20229.

INAPPLICABILITY OF EXECUTIVE ORDER 12044

This document is not subject to the Treasury Department directive implementing Executive Order 12044, Improving Government Regulations, because the proposal was in process before May 22, 1978, the effective date of the directive.

AUTHORITY

These amendments are proposed under the authority of R.S. 251, as amended, and sections 553, 554, 624, 46 Stat. 742, as amended, 743, 759 (19 U.S.C. 66, 1553, 1554, 1624).

PROPOSED AMENDMENTS

It is proposed to amend part 123, Customs Regulations (19 CFR, part 123), in the following manner:

PART 123—CUSTOMS RELATIONS WITH CANADA AND MEXICO

SUBPART E—UNITED STATES AND CANADA IN-TRANSIT TRUCK PROCEDURES

1. It is proposed to amend section 123.41 to read as follows:

123.41 Truck shipments transiting Canada.

(a) *Manifest required.*—Trucks with merchandise transiting Canada from point to point in the United States will be manifested on United States-Canada Transit Manifest, Customs Form 7512–B Canada 8–1/2. The driver shall present the manifest in four copies to U.S. Customs at the U.S. port of departure for review and validation.

(b) *Procedure at U.S. port of departure.*—The Customs officer receiving the manifest shall validate it by stamping each copy in the lower right hand corner to show the port name and date and by initialing each copy. All copies of the validated manifest then will be returned to the driver for presentation to Canadian Customs at the Canadian port of entry.

(c) *Procedure at Canadian ports of arrival and exit.*—Truck shipments transiting Canada shall comply with Canadian Customs regulations. These procedures generally are as follows:

(1) *Canadian port of arrival.*—The driver shall present a validated United States-Canada Transit Manifest, Customs Form 7512–B Canada 8–1/2, in four copies to the Canadian Customs officer, who shall review the manifest for accuracy and verify its validation by U.S. Customs. If the manifest is found not to be properly validated, the truck shall be required to be returned to the U.S. port of departure so that the manifest may be validated. If the manifest is validated properly and no irregularity is found, the truck will be sealed unless sealing is waived by Canadian Customs. The original manifest will be retained by Canadian Customs at the port of arrival, and the

three copies will be returned to the driver for presentation to Canadian Customs at the Canadian port of exit.

(2) *Canadian port of exit.*—The driver shall present the three copies of the validated manifest to the Canadian Customs officer at the Canadian port of exit for certification. That officer shall verify that the seals are intact if the vehicle has been sealed or, if sealing has been waived, that there are no irregularities. After verification and certification of the manifest, two certified copies will be returned to the driver (one to be presented to U.S. Customs at the U.S. port of reentry, the other for the carrier's records), and the truck will be allowed to proceed to the United States.

(d) *Procedure at U.S. port of reentry.*—The driver of a truck reentering the United States after transiting Canada shall present a certified copy of the United States-Canada Transit Manifest, Customs Form 7512–B Canada 8–1/2, to the U.S. Customs officer. If this copy of the manifest does not bear the certification of a Canadian Customs officer at the Canadian port of exit, the driver will be allowed to return to that port to have it certified. The driver will be allowed to break any seals affixed by Canadian Customs upon presentation of a certified manifest. If sealing has been waived, the U.S. Customs officer shall satisfy himself that the truck contains only that merchandise covered by the manifest which moved on the truck from the United States through Canada.

(e) *Proof of exportation from Canada.*—The certified copy of the manifest returned to the driver by Canadian Customs at the Canadian port of exit will serve as proof of exportation of the shipment from Canada.

2. It is proposed to amend section 123.42 to read as follows:

123.42 Truck shipments transiting the United States.

(a) *Manifest required.*—Trucks with merchandise transiting the United States from point to point in Canada will be manifested on United States-Canada Transit Manifest, Customs Form 7512–B Canada 8–1/2. The driver, in accordance with Canadian Customs regulations, shall present the manifest in four copies to Canadian Customs at the Canadian port of departure for review and validation.

(b) *Procedure at Canadian port of departure.*—The Customs officer receiving the manifest shall validate it by stamping each copy in the lower right hand corner to show the port name and date and by initialing each copy. All copies of the validated manifest then will be returned to the driver for presentation to U.S. Customs at the United States port of entry.

(c) *Procedure at U.S. port of arrival.* (1) *Presentation of manifest.*—The driver shall present a validated United States-Canada Transit Manifest, Customs Form 7512–B Canada 8–1/2, in four copies to the U.S. Customs officer, who shall review the manifest for accuracy and verify its validation by Canadian Customs. If the manifest is found not to be validated properly, the truck will be required to be returned to the Canadian port of departure so that the manifest may be validated in accordance with Canadian Customs regulations. If the manifest is validated

properly and no irregularity is found, the truck will be sealed unless sealing is waived by U.S. Customs. The U.S. Customs officer shall note on the manifest over his initials the seal numbers or the waiver of sealing, retain the original, and return three copies of the manifest with the related Customs form 7512–C (duplicate) to the driver for presentation to U.S. Customs at the U.S. port of exit.

(2) *Sealing or waiver of sealing.*—Trucks transiting the United States will be sealed with red in-bond seals at the U.S. port of arrival unless sealing is waived in accordance with section 18.4 of this chapter. If a truck cannot be sealed effectively and sealing is deemed necessary to protect the revenue or to prevent violation of the Customs laws or regulations, the truck will not be permitted to transit the United States under bond.

(d) *Procedure at U.S. port of exit.*—The driver shall present the three validated copies of the manifest and the related Customs form 7512–C (duplicate) to the U.S. Customs officer at the U.S. port of exit. The Customs officer shall check the numbers and condition of the seals and record and certify his findings on all copies of the manifest, returning two certified copies to the driver (one to be presented to Canadian Customs at the Canadian port of reentry, the other for the carrier's records), and the truck will be allowed to proceed to Canada. The check of the seals shall be made as follows:

(1) If the seals are intact, they will be left unbroken unless there is indication that the contents should be verified.

(2) If the seals have been broken, or there is other indication that the contents should be verified, all merchandise will be required to be unladen and a detailed inventory made against the waybills.

If sealing has been waived, the Customs officer shall verify the goods against the accompanying waybills in sufficient detail to detect any irregularity.

(e) *Procedure at Canadian port of reentry.*—The driver of a truck reentering Canada after transiting the United States shall present a certified copy of the United States-Canada Transit Manifest, Customs Form 7512–B Canada 8–1/2, to the Canadian Customs officer. If this copy of the manifest does not bear the certification of a U.S. Customs officer at the U.S. port of exit, the driver will be allowed to return to that port to have it certified.

(f) *Proof of exportation from United States.*—The certified copy of the manifest returned to the driver by the U.S. Customs officer at the U.S. port of exit will serve as proof of exportation of the shipment from the United States.

WILLIAM T. ARCHEY,
Acting Commissioner of Customs.

Approved: July 29, 1980.

RICHARD J. DAVIS,
Assistant Secretary of the Treasury

[Published in the Federal Register, Aug. 20, 1980 (45 F.R. 55474)]

Decisions of the United States Court of Customs and Patent Appeals

(C.A.D. 1253)

VOSS INTERNATIONAL CORP. *v.* THE UNITED STATES, No. 79-26

Antidumping Act of 1921 as amended—International Trade

1. Commission proceeding

Judgment of Customs Court that a valid determination of injury was made pursuant to section 160(a) of the Antidumping Act of 1921, as amended, 19 U.S.C. 160(a), by an evenly divided vote of the Tariff Commission (now International Trade Commission) with one member abstaining, is affirmed.

2. Id.—Purchase price, 19 U.S.C. 162

Judgment of Customs Court that the price paid by appellant was not a price at which such merchandise had been agreed to be purchased prior to the time of exportation, pursuant to 19 U.S.C. 162, is reversed and remanded.

3. International Trade Commission—Affirmative determination of injury

The rule that a majority of a quorum is sufficient to make a valid determination for the Commission is modified by 19 U.S.C. 160(a), which provides for an affirmative determination of injury if the Commissioners voting are evenly divided.

4. Id.—Number of Commissioners voting

The legislative intent of 19 U.S.C. 160(a) was to provide for an affirmative determination of injury if at least half the Commissioners voting were convinced of injury.

5. Final exact price paid, 19 U.S.C. 162

While the final exact price paid could not be determined until after the date of exportation, the terms of purchase, including the calculation to adjust for exchange rate fluctuation, were agreed to prior to the date of exportation, as required by 19 U.S.C. 162.

U.S. Court of Customs and Patent Appeals, August 13, 1980

326-863 O - 80 - 4

Appeal from U.S. Customs Court C.D. 4698

[Reversed and Remanded.]

Edward N. Glad, attorney for appellant.

Alice Daniel, Assistant Attorney General, *David M. Cohen*, Director, *Joseph I. Liebman*, Attorney in Charge, Field Office for Customs Litigation, *Susan C. Cassell*, of counsel.

[Oral argument on December 12, 1979, by Edward N. Glad for appellant and Susan C. Cassell for appellee.]

Before MARKEY, *Chief Judge*, RICH, BALDWIN, and MILLER, *Associate Judges*, FRIEDMAN, *Chief Judge*, U.S. Court of Claims.[1]

BALDWIN, Judge.

[1] [2] This appeal is from the judgment of the U.S. Customs Court, 78 Cust. Ct. 130, C.D. 4698, 432 F. Supp. 205 (1977) (hereinafter Voss I), granting appellee's motion for partial summary judgment, holding that a valid affirmative determination of injury to an industry in the United States was made in accordance with 19 U.S.C. 160(a) [2] by the Tariff Commission (now the International Trade Commission, hereinafter referred to as Commission), and from the judgment of the Customs Court, 82 Cust. Ct. 190, C.D. 4801, 473 F. Supp. 327 (1979) (hereinafter Voss II), dismissing appellant's action challenging the amount of special dumping duties assessed. The appeal from both judgments challenges the legality of certain dumping duties assessed pursuant to the Antidumping Act of 1921, as amended, 19 U.S.C. 160 et seq. We affirm the judgment of Voss I. We reverse and remand the judgment of Voss II.

ISSUES

The first issue addressed is whether the Commission's determination of injury was a valid affirmative determination of injury in accordance with 19 U.S.C. 160(a). The second issue is whether the purchase price paid by appellant (Voss) was definite and determinable prior to the date of exportation of the subject merchandise.

---

[1] The Honorable Daniel M. Friedman, U.S. Court of Claims, sitting by designation.

[2] 19 U.S.C. 160(a), in effect at the date of the transaction, provided:

§160. *Initiation of investigation; injury determination; findings; withholding appraisement; publication in Federal Register*

(a) Whenever the Secretary of the Treasury (hereinafter called the Secretary) determines that a class or kind of foreign merchandise is being, or is likely to be, sold in the United States or elsewhere at less than its fair value, he shall so advise the U.S. Tariff Commission, and the said Commission shall determine within 3 months thereafter whether an industry in the United States is being or is likely to be injured, or is prevented from being established, by reason of the importation of such merchandise into the United States. The said Commission, after such investigation as it deems necessary, shall notify the Secretary of its determination, and, if that determination is in the affirmative, the Secretary shall make public a notice (hereinafter in secs. 160–173 of this title called a finding) of his determination and the determination of the said Commission. For the purposes of this subsection, *the said Commission shall be deemed to have made an affirmative determination if the Commissioners of the said Commission voting are evenly divided as to whether its determination should be in the affirmative or in the negative*. The Secretary's finding shall include a description of the class or kind of merchandise to which it applies in such detail as he shall deem necessary for the guidance of customs officers. [Italic ours.]

BACKGROUND

The subject merchandise consists of asbestos cement pipe (pipe) which was exported from Japan on February 13, 1972, and entered at the Port of Los Angeles on March 17, 1972, under consumption entry No. 172391.

As contemplated by 19 U.S.C. 160(a), the Commission conducted an investigation to determine whether the importation of the pipe was injuring an industry in the United States. The Commission made a determination of injury by an evenly divided vote of two commissioners for and two against with a fifth commissioner, who was present when the actual determination of injury was made, abstaining. The Commission has a membership of six commissioners.

The Secretary of the Treasury, accordingly, made a public finding of dumping in accordance with 19 U.S.C. 160(a). The Customs Service then ascertained the foreign market value as defined in 19 U.S.C. 164 and the purchase price as defined in 19 U.S.C. 162,[3] and assessed special dumping duties in an amount equal to the difference, as required by 19 U.S.C. 161.[4] The parties do not question the foreign market value ascertained by the Customs Service.

In assessing the special dumping duties, the Customs Service determined that the Japanese trading firm of Marubeni-Iida Co. Ltd. (Marubeni Japan) was the purchaser of the pipe and that its wholly owned subsidiary, Marubeni-Iida (America), Inc. (Marubeni America) was the person by whom or for whose account the merchandise was imported. Customs concluded that the price paid by Marubeni Japan to the Japanese manufacturer of the pipe, Kubota Iron & Machinery Works, Ltd. (Kubota), represented the purchase price as defined by 19 U.S.C. 162.

PURCHASE PRICE AGREEMENTS

Mr. Arthur A. Voss, the president of Voss, first approached Kubota in Japan in an effort to find a source for asbestos cement pipe. Kubota represented that it could produce such pipe to American standard specifications. These meetings culminated with an initial agreement

---

[3] 19 U.S.C. 162 provides in relevant part:

§ 162. Purchase price

For the purposes of this section and sections 160–171 of this title, the purchase price of imported merchandise shall be the price at which such merchandise has been purchased or agreed to be purchased, prior to the time of exportation, by the person by whom or for whose account the merchandise is imported, plus [certain enumerated costs].

[4] 19 U.S.C. 161(a) provides:

§ 161. Amount of duty to be collected; determination of foreign market value of goods

(a) In the case of all imported merchandise, whether dutiable or free of duty, of a class or kind as to which the Secretary of the Treasury has made public a finding as provided for in section 160 of this title, entered, or withdrawn from warehouse, for consumption, not more than 120 days before the question of dumping was raised by or presented to the Secretary or any person to whom authority under said section has been delegated, and as to which no appraisement report has been made before such finding has been so made public, if the purchase price or the exporter's sales price is less than the foreign market value (or, in the absence of such value, than the constructed value) there shall be levied, collected, and paid, in addition to any other duties imposed thereon by law, a special dumping duty in an amount equal to such difference.

on August 1, 1960, followed by subsequent agreements in 1966, 1968, and 1969, none of which are relevant to the present controversy.

The agreement of January 22, 1971, is directly relevant since the purchase orders for the entries in question were made subject to that agreement. This agreement was in the form of a letter from Marubeni Japan to Voss, confirmed by Voss and Kubota, and stated at the outset:

> We are pleased to confirm our agreement concerning our transaction of Kubota asbestos cement pipe to be shipped during 1971, reached among Kubota, Ltd. as manufacturer, Voss International Corp. as buyer and Marubeni-Iida Co., Ltd., as seller, in the discussion held by the above parties on January 21, 1971, at Tokyo on terms and conditions set forth hereunder.

The agreement then prescribes the specific dollar price for various diameters and classes of pipe, FAS Osaka; provides a quantity for 1971 of about 18,000 tons; and sets forth size and length specifications. The agreement provides terms and conditions for payment by Voss to Marubeni America. Further, it was agreed that Voss, Marubeni Japan, and Kubota would each contribute a certain sum for a sales promotion fund. A provision to provide for exchange fluctuation was included:

> The price payable by the buyer to the seller under this agreement shall be based upon present exchange parity rate of Japanese yen 360 to 1 U.S. dollar. In case of any devaluation and/or revaluation of U.S. dollar and/or Japanese yen after the date of this agreement, the price shall be renegotiated among the concerned parties.

A letter dated September 7, 1971, from Marubeni America to Voss, and confirmed by Voss, provides a supplemental agreement with regard to the then existing floating or revaluation of Japanese yen. The agreement provided that the exchange loss due to yen fluctuation was for the buyer's account. Further, for each transaction the difference in exchange rates between the time of negotiation of the shipping documents and a specified time (exchange parity rate, at that time, about Japanese yen 357 per U.S. dollar) would be borne by the buyer, i.e., Voss, and that this difference would be paid by Voss to Marubeni America in cash at the exchange rate of the negotiation immediately after Voss received the invoice. Finally, the agreement was to be applicable to all of the present outstanding balance of specifically listed contracts (which included the purchase orders here in issue).

Other facts of relevance in the case are these: The consumption entry prepared by Voss identified Voss as the importer of record and as the person for whose account the merchandise was imported. Voss paid the duties in question. However, the special Customs invoice filled out by Marubeni Japan identified Marubeni America as the

purchaser of the merchandise. The packing list also filled out by Marubeni Japan identified Marubeni America as the party for those account and risk the merchandise in question was sold. Voss paid for the imported pipe in question by check made out to Marubeni America.

CUSTOMS COURT DETERMAINTIONS

(a) *Motion for partial summary judgment with regard to validity of Commission's determination of injury.*—In Voss I, supra, Voss contended that the Commission's determination of injury was ultra vires and, therefore, invalid. Voss asserted that the Commission exceeded its statutory authority by entertaining the abstention of a member otherwise participating in order to achieve an affirmative determination when his vote would have materially affected the outcome of the proceedings. The Customs Court first remanded this case to the Commission for reconsideration of the determination of injury. The Commission chose to stand by its original vote and corresponding determination of injury. The Customs Court then ruled that a valid affirmative determination of injury pursuant to section 160(a) was reached by the Commission since two members voted affirmatively and two members voted negatively, and granted the Government's motion for partial summary judgment as to this issue.

(b) *Trial on assessment of dumping duties.*—A trial was held on Voss's second cause of action which challenged the amount of dumping duties assessed against the subject pipe. The Customs Court determined that the clear weight of the evidence before it established (1) that Kubota and Marubeni Japan entered into a sales contract for exportation of cement asbestos pipe to the United States, with Kubota having no direct transactions with either Marubeni America or Voss; (2) that a contract was concluded between Marubeni Japan and Voss for each calendar year; (3) that Kubota sold the subject merchandise to Marubeni Japan on the basis of FAS Osaka, and Marubeni Japan generally paid Kubota 80 percent of the purchase price within 20 days after the date of the sales contract and paid the balance of 20 percent within 2 weeks after shipping; (4) that Kubota and Marubeni Japan negotiated on a principal to principal basis; and (5) that Marubeni Japan sold the subject merchandise to Voss on a FAS Osaka basis. The court concluded that the Customs Service determination that Marubeni Japan was the purchaser of the pipe and that Marubeni America was the person by whom or for whose account the merchandise was imported was erroneous as a matter of law, and directly contrary to 19 U.S.C. 162. The court ruled that the price that becomes the purchase price under 19 U.S.C. 162 is the price at which the person by whom or for whose account the merchandise is imported agrees to purchase said merchandise. The court concluded

that Marubeni Japan was the seller of the merchandise and that Voss was the person for whose account the merchandise was imported.

However, the court then considered whether or not Voss' price was a proper purchase price under 19 U.S.C. 162 which provides that the purchase price "shall be the price at which such merchandise has been purchased or agreed to be purchased, *prior to the time of exportation.*" [Italic ours.] The court held that at the time of the original agreement, January 22, 1971, and at the time of the supplemental agreement, September 7, 1971, it was impossible to know what effect, if any, currency fluctuations would have on the ultimate purchase price. At the time the pipe was exported, February 13, 1972, Voss did not know the exact amount it would have to pay. By the terms of the supplemental agreement, Voss did not know the exact price it would pay until the date of negotiation of the shipping documents, which in this case was February 18, 1972. The court ruled that this supplemental agreement regarding the loss due to currency fluctuation frustrates the intent of the Antidumping Act since it is an agreement to pay an amount to be determined after the date of exportation and thus may not form a basis for the determination of the purchase price as defined in 19 U.S.C. 162. The court indicated that the Antidumping Act envisions that a definite and determinable purchase price (whether actual or agreed) must exist prior to the date of exportation for comparison with the foreign market value—this in order to determine the margin of dumping. Since the exact amount Voss would pay according to the agreements was not calculable until February 18, 5 days after the date of exportation, the court reasoned that this exact price was not the purchase price for purposes of 19 U.S.C. 162, because it was not a price paid or agreed to be paid prior to the date of exportation. Accordingly, the Customs Court dismissed the second cause of action, Voss II, supra.

OPINION

(a) *Validity of Commission's determination of injury.*—A quorum of the members of the Commission can conduct the business of the Commission. In the absence of statutory restriction, a majority of a quorum is sufficient to make a valid determination for the Commission. *Frischer & Co.* v. *Bakelite Corp.*, 17 CCPA 494, 504, T.D. 43964, 39 F. 2d 247, 255, cert. denied, 282 U.S. 852 (1930). See also *FTC* v. *Flotill Products, Inc.*, 389 U.S. 179 (1967). Congress has expressly provided in 19 U.S.C. 1330(c) that a majority of the Commissioners in office shall constitute a quorum.

[3] The general rule of *Frischer* is modified for the purposes of determination of injury in a dumping investigation by section 160(a). The statutory language of section 160(a) which provides for an affirmative determination "if the Commissioners of the said Commission voting

are evenly divided" looks to the Commissioners who participate in the vote and not those who are present at the time the vote is taken.

By this language, we do not consider that Congress intended to compel a Commissioner present at a meeting to vote on every issue presented for determination. Abstention from voting is a legally permissible right often exercised by members of legislative and administrative bodies. See, e.g., *Greater Boston Television Corp.* v. *Federal Communications Commission*, 444 F. 2d 841, 861 (D.C. Cir. 1970), cert. denied, 403 U.S. 923 (1971). Also, we do not consider that the courts are compelled by this language to probe the mental processes of a hearing officer or to inquire into the manner and method of administrative consideration of evidence to discern the reasons for the abstaining vote, i.e., whether it was for good cause. *United States* v. *Morgan*, 313 U.S. 409 (1941).

In 1958, the Congress considered a bill (H.R. 6006) to amend certain provisions of the Antidumping Act of 1921. The Senate Finance Committee, in reporting the House-passed bill, proposed an amendment to the bill which further amended the law (section 160(a)) to provide that "if there is an evenly divided vote within the Commission, then a finding of injury results." Senate Report No. 1619, 85th Congress, 2d session, reprinted in (1958) U.S. Code Cong. & Ad. News 3498, 3499.

Senator Byrd of Virginia, the committee chairman, made the following comments relevant to Senate consideration of the proposed amendment:

> If the Tariff Commission finds injury is threatened or is occurring, then the Secretary of the Treasury is to assess special dumping duties. There are six members on the Tariff Commission and equally divided votes are not uncommon. The committee amendment would provide that * * * if the members of the Commission voting were evenly divided on the question of injury, then a finding of injury would result. In other words, if there was sufficient evidence of injury to convince half the number of the Commissioners voting, then the finding would be of injury and the Secretary of the Treasury would so recognize it. [104 Cong. Rec. 9456 (1958).]

Upon submitting the conference committee report for consideration, Senator Byrd remarked:

> (T)his is a unanimous conference report. It is signed by the conferees of both the Senate and the House. The only change it makes in the bill is to provide that when the Tariff Commission renders an equal decision—three one way and three the other way—it is affirmative with respect to injury. That is the only change which is made in the bill. [104 Cong. Rec. 15987 (1958).]

Although the latter statement seemingly indicates that Senator Byrd was concerned only with situation where all six members of the Commission participated and they were equally divided—which is how Voss interprets the statute—the language Congress used was not so restrictive. To the contrary, as Senator Byrd stated in the preceding quotation (and as the statute provides), if "half the number of the Commissioners voting" concluded that there was injury to competition the equally divided vote of the Commission would be deemed to constitute an affirmative determination of injury.

[4] On the basis of the foregoing, we are satisfied that the legislative intent was to provide for an affirmative determination of injury if at least half the Commissioners voting were convinced of injury by the evidence presented, notwithstanding that the statutory language chosen provides an exception to the general rule of *Frischer* when the vote is evenly divided.

On April 20, 1972, when the Commission voted on the question of injury, four Commissioners actually participated in the determination by voting, two affirmatively and two negatively. A fifth member was present for the determination but abstained from voting. The four members were a majority of the Commissioners in office and thus constituted a quorum under 19 U.S.C. 1330(c).

We hold, therefore, that a valid affirmative determination of injury for purposes of 19 U.S.C. 160(a) was reached on April 20, 1972, by the Commission, since a legally constituted quorum of four members did participate in the determination of injury by voting, and there was an evenly divided vote.

Voss asserts that the Government, having prayed for and received an order based on a determination that the Commission's determination was invalid, is now precluded or estopped from arguing to the contrary. In so asserting, Voss interprets the action of the Customs Court in first remanding this case to the Commission for reconsideration of the determination of injury as a judgment by the court that the Commission's determination of injury was invalid. We consider this assertion of Voss without merit. The express terms of the order below, dated August 25, 1976, denied both Voss's motion for summary judgment and the Government's cross-motion for partial summary judgment, remanded the case to the Commission for reconsideration, and stayed the proceedings. The court's order neither expressly nor by implication decided the issue of the validity of the Commission's determination of injury.

(b) *Assessment of dumping duties.*—For purposes of this appeal, the parties do not question the Customs Court's determination that for purposes of assessing dumping duties for the transaction in issue, Marubeni Japan was the seller of the subject merchandise and Voss

was the person by whom or for whose account the merchandise was imported.[5]

In its supplemental brief, responding to a direct question from this court wherein we asked for the parties' views on the legal correctness of the Customs Court's determination, the Government does contend that, for purposes of assessing duties under the Antidumping Act, the seller of the merchandise was Kubota and the buyer was Marubeni Japan for the account of Marubeni America. In a footnote to its supplemental brief, the Government notes that "(i)n our brief before this Court, we did not assert this argument because the Customs Court decision could be supported on the grounds that the price to Voss was not a proper 'purchase price' under the statute."

Accordingly, the question presented for our determination is simply whether the purchase price paid by Voss was a "price at which such merchandise has been * * * agreed to be purchased, prior to the time of exportation" as provided for in section 162. The Government has conceded, for the purposes of this appeal, that the price which Marubeni Japan paid to the manufacturer Kubota is to be ignored in view of the Customs Court's determination of the transaction in issue, but now asserts that the price paid by Voss was not a proper purchase price under section 162, since the exact price was not known prior to exportation, and thus was not negotiated prior to exportation. The Government asserts that section 162 provides a specific congressional mandate that the exact price must be known prior to exportation, but the statute does not so provide.

The Customs Court stated in its opinion:

> At the outset, it is clear that the Antidumping Act envisions that a definite and determinable purchase price (whether actual or agreed) must exist prior to the date of exportation for comparison with the foreign market value—this in order to determine the margin of dumping. [Voss II, supra, 82 Cust. Ct. at ——, 473 F. Supp. at 332.]

While the court cites no support for this conclusion, for purposes of this appeal we accept this statement in view of the fact that appellant specifically accepted it in its brief.

---

[5] The following legislative history is relevant to the reasons for certain modifications to purchase price sec. 772 of the Trade Agreements Act of 1979, Public Law No. 96-39, 93 Stat. 144:

> The purpose of the substantive modification to purchase price is to establish in the statute present administrative practice. If a producer knew that the merchandise was intended for sale to an unrelated purchaser in the United States under terms of sale fixed on or before the date of importation, the producer's sale price to an unrelated middleman will be used as the purchase price. The dicta in *Voss International* v. *United States*, C.D. 4801 (May 7, 1979), which is inconsistent with this practice, is explicity overruled. Thus, purchase price may be used if transactions between related parties indicate that the merchandise has been sold prior to importation to a U.S. buyer unrelated to the producer. [Senate Report No. 96-249, 96th Congress, 1st session, 94, reprinted in [August 1979] U.S. Code Cong. & Ad. News No. 6A, 3, 102.]

326-863 O - 80 - 5

The trial court went further, however, and reasoned that a definite and determinable price for purposes of section 162 must be an exact price known prior to the date of exportation. Since Voss did not know the exact amount in U.S. dollars it would have to pay for the merchandise until receipt of the shipping documents, in this case 5 days after the date of exportation, the court concluded that "the price which Voss paid or agreed to pay Marubeni was not the 'purchase price' for purposes of 19 U.S.C. 162, because it was not a price paid or agreed to be paid *prior to the date of exportation*." (Italic in original.) Voss II, supra, 82 Cust. Ct. at ——, 473 F. Supp. at 333.

[5] However, by the terms of the agreement of January 22, 1971, together with the supplemental agreement of September 7, 1971, there was nothing more the parties had to negotiate or agree to regarding the price that Voss would pay for the merchandise under section 162. (See the discussion of purchase price agreements supra.) The original agreement prescribed the specific dollar price for the merchandise and the then prevailing exchange rate. The supplemental agreement, entered into prior to the date of exportation, sets forth the clear intention of the parties that the buyer, Voss, would pay to Marubeni America a sufficient amount of U.S. dollars to provide for exchange loss due to yen fluctuation. An exchange parity rate at a specified time was agreed to by the parties, with any difference in exchange rates between that time and the time of negotiation of the shipping documents to be borne by Voss. The clear result is a definite and determinable price in yen irrevocably agreed to prior to the time of exportation. That Voss agreed to pay more or less dollars in accordance with exchange fluctuations does not change the price agreed to be paid to the Japanese vendor.

In response to a direct question by this court, wherein we asked the parties whether a price agreed to be paid would satisfy section 162 if that price were known and fixed in amount of yen to be received by the seller, the Government conceded that "(i)f a contract provided for a definite, determinable, and exact price fixed in Japanese yen, not subject to any condition subsequent to exportation, that price would be a proper 'purchase price' under section 162." However, the Government then contended that in this case the purchase price agreements were contracts payable in U.S. dollars and both were dependent for exactness in dollars upon a condition subsequent to exportation, and that neither agreement fixed a price in yen to be paid by Voss.

This response by the Government avoids the question whether the price paid by Voss was a definite and determinable price in yen prior to such time of exportation. The clear intention of the purchase price agreements was to establish with certainty the amount of yen to be

received by the seller. Voss, in its memorandum response to our questions, points out that the agreement of January 22, 1971, requires only that the dollar amounts be multiplied by 360 to determine their yen equivalents. If the agreement of September 7, 1971, is to be considered an amendment to the annual contract, then it is only necessary that the dollar amounts be multiplied by the exchange rate at the specified time to determine their yen equivalents. The net effect of the subject purchase price agreements is that Voss agreed to pay a sufficient amount of dollars to yield an agreed upon amount of yen.

We hold, therefore, that the price paid by Voss, by virtue of the agreements in the record before us, was a definite and determinable price in yen agreed to prior to the time of exportation, and was a "price at which such merchandise has been * * * agreed to be purchased, prior to the time of exportation" as provided for in section 162. The court below erred in its conclusion to the contrary and in dismissing the action for that reason.

The Customs Service had assessed dumping duties on a transaction based on determinations by the Customs Service found by the Customs Court to be erroneous as a matter of law. As a result of the dismissal of the action, there has been no assessment of dumping duties on the transaction viewed by the Customs Court as the proper transaction. Accordingly, we remand to the Customs Court for consideration and determination of dumping duties to be assessed upon the proper transaction.

CONCLUSION

We *affirm* the judgment of the Customs Court granting appellee's motion for partial summary judgment wherein the determination of injury by the Commission was deemed to constitute a valid affirmative determination pursuant to 19 U.S.C. 160(a). We *reverse* the judgment of the Customs Court dismissing the second cause of action challenging the amount of dumping duties assessed by the Customs Service and *remand* to the Customs Court for further action consistent with this opinion.

Modified and remanded.

FRIEDMAN, *Chief Judge*,[6] dissenting in part, with whom MARKEY, *Chief Judge*, joins.

I agree with the court that the equally divided vote of the four voting members of the Tariff Commission constituted a valid affirmative determination of injury under section 160(a). I disagree, however, with the court's reversal of the Custom Court's ruling that there was no valid purchase price for purposes of section 162 and therefore also would affirm the Custom Court judgment in Voss II.

[6] The Hon. Daniel M. Friedman, U.S. Court of Claims, sitting by designation.

Section 162 defines the purchase price of imported merchandise, for the purpose of determining dumping duties, as "the price at which such merchandise has been * * * agreed to be purchased, prior to the time of exportation, by the person by whom or for whose account the merchandise is imported * * * ." The court accepts the Customs Court's ruling that under this provision Voss was the importer and Marubeni Japan was the seller. Although the January 22, 1971 agreement between those companies established dollar prices for the imported merchandise, it further stated that the prices were based upon the then existing exchange rate between the dollar and the yen, and that if either currency were devalued and/or revalued, "the price shall be renegotiated among" the parties.

On September 7, 1971, Voss and Marubeni America made a supplemental agreement providing that Voss would bear any exchange loss due to yen fluctuation and that Voss would pay Marubeni America the differential "at the exchange rate * * * immediately after (Voss) receives the invoice" for the goods. Voss received the shipping documents covering the merchandise on February 18, 1972, 5 days after the goods had been exported. Since under the September 7, 1971 agreement Voss could not ascertain the price it would have to pay until February 18, 1972, the purchase price was not finally determined until the latter date. The price thus determined on February 18, 1972, was not "the price at which such merchandise * * * (was) agreed to be purchased, prior to the time of exportation," as section 162 requires.

The Customs Court correctly explained why section 162 contains this requirement. As that court stated:

> * * * the Antidumping Act envisions that a definite and determinable purchase price (whether actual or agreed) must exist prior to the date of exportation for comparison with the foreign market value—this in order to determine the margin of dumping.

The court's reasoning in concluding that this requirement of section 162 was here satisfied is as follows:

> Prior to exportation the parties had agreed upon a price in dollars based upon an exchange rate of 360 yen to the dollar, with the buyer to bear the risk of exchange loss due to yen fluctuation. Accordingly, "Voss agreed to pay a sufficient amount of dollars to yield an agreed-upon amount of yen." Thus, "the price paid by Voss, by virtue of the agreements in the record before us, was a definite and determinable price in yen agreed to prior to the time of exportation * * *."

As the court recognizes, however, the contract price was in dollars, not in yen. As long as the number of yen the seller would receive, i.e., the price, would vary with any changes in the value of the yen in relation to the dollar, the purchase price was not set. Although the

court states that there was "a definite and determinable price in yen irrevocably agreed to prior to the time of exportation," that statement is in error. If the value of the yen had decreased in relation to the dollar, Voss would have paid the dollar amounts specified in the contract, the agreement having specified that the purchaser, not the seller, bear losses due to yen fluctuation. If Voss paid in yen, a greater yen amount would have been required than that which would have been required at the time of the contract. Hence the price was not fixed in yen prior to exportation.

If the value of the yen had increased in relation to the dollar, Voss would have paid a greater dollar amount than that specified in the contract. If Voss paid in yen, the yen amount would have been that payable at the time of the contract. Solely because the value of the yen did in fact increase, the majority applies that later development to the contract to find a price fixed therein in yen. The agreement, however, required payment in dollars, and the amount of that payment was not determinable until after exportation, i.e., the day the shipping docuvments were negotiated. Because under the agreement Voss was to bear only losses due to yen fluctuation, it would pay a larger dollar amount if the fluctuation went in one direction. It would pay the contract dollar amount if the fluctuation went in the opposite direction. In the former instance the dollar payment would be the equivalent of the same yen amount the seller would have received at the time of the contract. In the latter the dollar payment would have been the equivalent of a greater yen amount than the seller would have received at the time of the contract. The parties having specifically conditioned the price upon information unknown until after the time of exportation, there was no fixed price, in either yen or dollars, as required by section 162.

For these reasons I conclude that the Customs Court correctly held that the purchase price here had not been agreed upon prior to exportation and that section 162 therefore was not satisfied.

Decisions of the United States Customs Court

United States Customs Court
One Federal Plaza
New York, N.Y. 10007

Chief Judge

Edward D. Re

Judges

Paul P. Rao
Morgan Ford
Scovel Richardson
Frederick Landis
James L. Watson
Herbert N. Maletz
Bernard Newman
Nils A. Boe

Senior Judge

Samuel M. Rosenstein

Clerk

Joseph E. Lombardi

Customs Decision

(C.D. 4867)

TEXAS INSTRUMENTS INCORPORATED, PLAINTIFF, *v.* UNITED STATES, DEFENDANT

On Plaintiff's Motion and Defendant's Cross-Motion for Summary Judgment

Court No. 76-2-00443

[Motion granted in part; cross-motion granted.]

(Decided August 5, 1980)

Eugene L. Stewart for the plaintiff.

Alice Daniel, Assistant Attorney General; *David M. Cohen*, Director, Commercial Litigation Branch (*Sheila N. Ziff* on the briefs), for the defendant.

RICHARDSON, Judge: In this action involving the importations of integrated circuits, silect transistors, and metal can transistors assembled in Curacao, Netherlands Antilles, by Geophysical Service Inc. and exported to the United States in 1968 and 1969, plaintiff has moved, and defendant has cross-moved, for summary judgment. In issue under the pleadings as augmented by the first amended complaint, which amendment the court hereby allows in view of the lack of opposition thereto by the defendant, is the propriety of the appraising officer's actions in (1) disallowing item 807.00 treatment for a plastic epoxy molding compound used in the assembly of some of the imported devices, (2) making certain additions to or refusing to make certain reductions against the cost of components fabricated or purchased in the States for use abroad in the assembly of the imported devices, (3) making certain additions to labor costs, general expenses, and profits, and (4) making improper value calculations in the application of the duty-free allowance.

It is conceded in the pleadings that the imported devices were produced in Curacao, Netherlands Antilles, by Geophysical Service Inc., hereinafter referred to as GSI, a wholly owned subsidiary of plaintiff who imported the devices, that during 1968 and 1969, GSI was the only producer and exporter in Curacao of merchandise of the same general class or kind as the imported devices, and that the merchandise in issue was appraised on the basis of constructed value. It is conceded by the parties that constructed value is the proper basis for determination of the value of the imported devices.

Central to a determination of the pending motions is a consideration of the circumstances which prompted the appraising officer, in the first instance, to make parallel and hence sometimes conflicting calculations of the component elements of constructed value (exhibits B and E) as against the final calculations made by plaintiff (exhibits A and D), bearing in mind the requirements of 19 U.S.C.A. 1401a(g) (sec. 402(g), Tariff Act of 1930, as amended by the Customs Simplification Act of 1956).

The record shows that the appraising officer was possessed of no independent sources of cost information, and was entirely dependent upon plaintiff for the data with which he appraised the imported merchandise. The record also shows that plaintiff's cost submissions were initially overstated in the estimation of duties tendered with its entries out of an abundance of caution to guard against underestimation of the Government's revenues. Hence, it is a foregone conclusion that plaintiff would have had to revise its cost figures periodically because of its use of standard costs (i.e., costs for a past period) in the entry of the merchandise which varied from actual costs. This was

apparently permissible in plaintiff's case under applicable customs regulations. See 19 CFR. 8.15(d)(1) (1968 ed.).

The appraising officer elected to disregard the transactions between plaintiff and its subsidiary, GSI, solely for the reason, it appears, that the importing and exporting parties are related (exhibit B, note A). Nevertheless, the appraising officer was also of the opinion that the general expenses and profit of the exporter are "the usual in the trade" because GSI is "the only producer of this type of merchandise in the Netherlands Antilles" (exhibit E, note M).

However, because of this relationship, the appraising officer deemed it necessary to determine for himself the usual general expenses and profit percentage that was to be applied to the individual device cost of labor and fabrication in the transactions between plaintiff and GSI.

In determining the usual general expenses and profit percentage for each year (1968 and 1969), the appraising officer determined the total cost of materials, fabrication, general expenses, and profit for each year, and then divided the total of materials and fabrication into the total of general expenses and profit.

In addressing himself to data presented by plaintiff relative to GSI's booked costs, where an item of cost was deemed adequate the appraising officer accepted that amount. Where an item of cost was deemed to be deficient, he, in most instances, accepted the upward adjustment suggested by plaintiff. He objected to plaintiff's suggestion for a reduction to a lesser amount of some costs incurred by GSI. He also objected to plaintiff's suggestion for elimination of certain interdivisional and intragroup profits.

As to materials manufactured by plaintiff and sold to GSI at a loss, not only were these materials uplifted to actual cost by the appraising officer, they were also uplifted by an additional 8.11 percent to reflect the price plaintiff would have charged had GSI been an independent customer. The 8.11 percent figure represented a consolidated corporate profit experienced by plaintiff in 1968, based upon the total of all costs, which was utilized when it was determined that GSI made no profit in 1968. The appraising officer opined, "There was no overall profit made in Curacao for 1968. Because that is not normal and apparently resulted from the fact that the plant was new or was the result of some artificial cause, we agreed with the importer that we would use the corporate profit for TI (Texas Instruments Inc.) for 1968 which was 8.11 percent" (exhibit E, note L).

In determining whether or not to disregard a transaction between related parties, an appraising official must be guided by something more than mere suspicion generated by the relationship between the parties per se. See *Greb Industries, Ltd.* v. *United States*, 64 Cust. Ct. 608, 617, R.D. 11691, 308 F. Supp. 88 (1970). He must possess factual

information indicative that the amount purporting to represent a particular element of value "does not fairly reflect the amount usually reflected in sales in the market under consideration of merchandise of the same general class or kind as the merchandise undergoing appraisement." See 19 U.S.C.A. 1401a(g)(1); *Brown, Alcantar & Brown, Inc., et al.* v. *United States*, 69 Cust. Ct. 249, 254, A.R.D. 306, 348 F. Supp. 723 (1972). In the instant case the appraising officer possessed no such contravening facts inasmuch as he knew that GSI was the only producer of merchandise of the same general class or kind in Curacao, the market under consideration. Thus, it is clear here that the appraising officer who, in this aspect of the administrative proceeding, (at least, has the burden of persuasion), discredited the transactions between the parties while lacking the proper basis to make that judgment at the outset.

Given the facts at bar, the focal point of concern on the part of the appraising officer, as perhaps with all new export industries facing customs scrutiny, should have been the bona fides of the transactions themselves. Cf. *Ziade* v. *United States*, 14 Ct. Cust. Appls. 47, 50, T.D. 41551 (1926). On the instant motions plaintiff has made an extensive and minutely detailed showing of the cost structure underlying the imported devices. Indeed, it did as much at the administrative level over the period of time that the subject entries were before the customs officials. Of course, in reviewing the evidence the court's role is not to resolve any genuine factual issues in the case, provided that they are not material issues. *United States* v. *Sumitomo Shoji, New York, Inc.*, 63 CCPA 79, 83, C.A.D. 1169, 534 F. 2d 320 (1976).

As to plaintiff's contention that an item 807.00 allowance should be made for the epoxy compound used to encase the assembled silect transistors, it is noted that plaintiff places reliance upon *General Instrument Corporation* v. *United States*, 71 Cust. Ct. 51, C.D. 4470 (1973) for the proposition that epoxy pellets used for encapsulation purposes were within the ambit of item 807.00 (brief, p. 129). As the court reads C.D. 4470, which was decided by the writer of this opinion, the court did not so hold. In that case, which involved a claim for item 807.00 treatment for various types of diodes assembled in and exported to the States from Taiwan, the issue was whether or not encapsulation of the diodes by means of the plastic defeated the claim for allowance of item 807.00 treatment as to the diodes, and the court held that encapsulation did not defeat the importer's claim.

In C.D. 4470 the court was careful to distinguish between American products and assembled components—grouping the pellets as being one of four American products while elsewhere identifying the other products, i.e., nailhead leads, solder wafers, silver-silicon sandwich

cell, as the assembled components. And it was the diodes so assembled for which the allowance in duty was ordered by the court there, not the epoxy material. Consequently, plaintiff's reliance upon C.D. 4470 is misplaced.

Under the uncontroverted facts of this case, it is clear that the pellets do not qualify for item 807.00 treatment. In the form in which they were exported the pellets were not ready for assembly. According to the record the plastic material is of the thermosetting type which must be subjected to heat in Curacao in order to flow and assume a new permanent shape upon solidification. And during this process the material undergoes a change in chemical composition. Obviously, therefore, the pellets cannot be deemed to be fabricated components within the meaning of item 807.00 at the time of their exportation from the United States. It follows, therefore, that defendant's crossmotion for summary judgement must be granted as to plaintiff's claim for item 807.00 treatment for the epoxy compound.

Moving to the appraisement aspect of the case, the court is not impressed that any genuine factual issue exists as to the nature of the transactions involving the movement of the merchandise in issue between plaintiff and GSI. There is no question but that the products comprising the imported devices were sold and not consigned to GSI, notwithstanding the nomenclature employed by counsel in discussing the movement of the merchandise abroad and back again.

Also, the court finds no issue in the case relative to the element of profit in connection with the assembly and exportation of the merchandise at the bar in 1968. The record shows that there was no profit earned by GSI in 1968. Consequently, in the absence of any evidence of inaccurate reporting the court is in agreement with plaintiff that no profit as an element per se should be included in a constructed value appraisement affecting the 1968 devices. As the court reads 19 U.S.C.A. 1401a(d)(2) (sec. 402(d)(2), Tariff Act of 1930, as amended by the Customs Simplification Act of 1956), an addition for profit is not mandated where none was in fact experienced at the level which serves as criteria for ascertainment of this element of constructed value—in this case, GSI, by reason of its status as the sole producer in the market under consideration. See *United States* v. *Henry Maier*, 21 CCPA 41, 50, T.D. 46378 (1933). Any other view of the matter would result in the creation of an element of value as arbitrary as that existing under the old law formula of cost of production which Congress endeavored to move away from in the enactment of the new law formula of constructed value in its pursuit of commercial reality. See Senate Report No. 2560 on H.R. 6040, 84th Congress, 2d session, p. 3 (1956). Therefore, in the court's view the appraising officer erroneously calculated an element of profit in his return for the 1968 devices.

This is not to say, however, that profit does not enter into the ascertainment of constructed value for the 1968 devices. On the contrary, it does, if only in connection with the ascertainment of other elements of constructed value for these particular devices, namely materials and fabrication costs. This is simply because the criteria for ascertainment of costs of materials and fabrication, as particular elements of value, are not restricted as to location. Consequently, the resourcefulness of the appraising officer in reaching all aspects of cost, inclusive of intercorporate and intracompany profit, with respect to the elements of materials and fabrication as to the imported devices including the 1968 importations finds support in the statute, i.e., 19 U.S.C.A. 1401a(d)(1) (sec. 402(d)(1), Tariff Act of 1930, as amended by the Customs Simplification Act of 1956), and judicial precedents to which attention is called by defendant, and, therefore, must be upheld irrespective of whether such costs originate onshore in the United States or offshore in the country of exportation.

The same cannot be said with respect to the elements of general expenses and profit. In fact, it is in connection with the ascertainment of general expenses and profit that appraisement of merchandise under the residual new law formula witnesses its most radical departure from the old law standard, in the court's opinion. Under the new law no longer is the ascertainment of general expenses limitless as to place (i.e., the usual general expenses) as was the case under the old formula. Now, under the new law Congress, by linking the ascertainment of the element of general expenses with the ascertainment of the element of profit which, under the old law was limited as to place, has revealed an intention to limit the ascertainment of these two elements of a constructed value determination to offshore cost considerations. Such limitation is expressed in the statutory language, "in sales * * * in the country of exportation * * * for shipment to the United States," appearing in section 1401a(d)(2) which, of course, qualifies as to place the calculation of the elements of general expenses and profit. Cf. *Kaysons International, Ltd.* v. *United States*, 66 Cust. Ct. 560, 566, R.D. 11741 (1971).

The place limitation, of course, impacts the appraisement of the imported devices insofar as concerns the elements of general expenses and profit in view of the appraising officer's inability to employ the broader methodology such as he would be able to do if he could properly disregard the transactions at bar. A constructed value appraisement under the new statutory formula provides its own criteria for self-fulfillment. It does not permit the appraiser to go outside the guidelines in the statute.

A principal offender here is the item of corporate support expenses calculated under the heading of general and administrative expenses.

The appraising officer took the position that "It is traditional and statutorily correct to include all items of expense whether they were necessary or not. They were incurred and they are an actual expense" (exhibit B, note G). Thus, the appraising officer makes no pretense about the fact that the item of corporate support is neither offshore oriented nor involved in the production of the imported devices.

The case of *United States* v. *Cavalier Shipping Co., Inc., et al.*, 56 CCPA 117, C.A.D. 965, 412 F. 2d 245 (1969), to which defendant calls attention, supports the rejection of this item from the general expenses category because the item involved there (royalty) was incurred in the manufacture of the debarking machines offshore, and, as such, was found to be an item properly included in the cost of production and constructed value appraisements.

Likewise affected is the appraising officer's rejection of certain adjustments proposed by plaintiff under the headings of factory overhead, general expenses portion of startup costs, and other general and administrative expenses. Adjustment of these items as proposed was rejected because the proposed adjustments reflected only offshore cost considerations and not both onshore and offshore costs which were implicit in the markups and assists returned in the appraisements. In one instance, however, it is noted that the appraising officer did accept the adjustment figures proposed by plaintiff in connection with the 1969 costs for transferred administrative supplies, i.e., variance ($13,603), handling ($762), and freight ($1,855). And the appraising officer's reason for differentiating between the proposed adjustments here is lost on the court unless such action be associated with his calculation of the rate of profit (as an element of value) applicable to the 1969 devices. This rate too, like the proposed adjustments, is predicated upon offshore cost considerations.

The rationale underlying the ascertainment of the rate of profit applicable to the 1969 devices is that

> (s)ince GSI was the only manufacturer/assembler of semiconductor devices in Curacao in 1969, its experienced profit, not TI's, was the usual profit. In sum, the appraising officer was correct in utilizing GSI's own profit rate in appraising the merchandise (defendant's brief, pp. 18–19).

The court agrees with this rationale. And the only fault which can be found with the appraisements here is that the same rationale should have been applied in connection with ascertainment of the element of general expenses inasmuch as both elements are paired under the same qualifying phrases in the statute.

With respect to value calculations applicable to both the 1968 and 1969 devices, the court is of the opinion that other than the place limitation affecting ascertainment of the elements of general expenses

and profit in a constructed value determination as noted, there is no warrant in the statute for applying the profit rate so calculated against only Curacao based materials, labor, and assists as contended for under plaintiff's alternate claim. Unlike the situation in *Control Data Corporation* v. *United States*, 61 CCPA 109, C.A.D. 1132 (1974), which is relied upon by plaintiff, the materials, etc., at bar were not consigned to GSI, the assembler. They were sold to the assembler. And there is no showing in the record that any item was furnished without cost to or a charge against the assembler.

For the reasons stated plaintiff's motion for summary judgment is granted as to its claim against calculation of an element of profit applicable to the 1968 importations, and as to its claim against inclusion of onshore cost considerations in the calculation of the element of general expenses applicable to the importations. And, in the interest of minimizing mathematical error, the parties are hereby directed to submit to the court proposed findings of fact and conclusions of law resulting from the conclusions reached herein insofar as they affect the appraised unit values for each device type imported as shown in paragraph 247 of plaintiff's statement of material facts.

The foregoing constitutes the decision and orders of the court.

ERRATUM

CUSTOMS BULLETIN No. 24, dated June 11, 1980, C.D. 4856, page 59, footnote No. 1, delete this line: "According, these consolidated cases are dismissed as to that merchandise."

Decisions of the United States Customs Court

Abstracts

Abstracted Protest Decision

DEPARTMENT OF THE TREASURY, *August 11, 1980.*

The following abstracts of decisions of the United States Customs Court at New York are published for the information and guidance of officers of the customs and others concerned. Although the decisions are not of sufficient general interest to print in full, the summary herein given will be of assistance to customs officials in easily locating cases and tracing important facts.

ROBERT E. CHASEN,
Commissioner of Customs.

DECISION NUMBER	JUDGE & DATE OF DECISION	PLAINTIFF	COURT NO.	ASSESSED	HELD	BASIS	ENTRY AND MERCHANDISE
				Par. or Item No. and Rate	Par. or Item No. and Rate		
P80/119	Re, C.J. August 5, 1980	Kombi, Ltd.	77-12-14989	Item 705.35 15%	Item 734.97 Free of duty under GSP, by virtue of Ex. Order No. 11888 of 11/24/75	Stonewall Trading Co. v. U.S. (C.D. 4023)	New York Ski gloves, skimitts, or ski mittens; products of eligible beneficiary country

Decisions of the United States Customs Court

Abstracts

Abstracted Reappraisement Decisions

DECISION NUMBER	JUDGE & DATE OF DECISION	PLAINTIFF	COURT NO.	BASIS OF VALUATION	HELD VALUE	BASIS	PORT OF ENTRY AND MERCHANDISE
R80/232	Re, C. J. August 4, 1980	Adorence Co., Inc.	73-3-00918, etc.	Export value	Appraised values shown on entry papers less additions included in appraised values to reflect currency revaluation	C.B.S. Imports Corp. v. U.S. (C.D. 4739)	New York Various articles
R80/233	Re, C. J. August 4, 1980	CBS Imports Corp.	73-6-01631, etc.	Export value	Appraised values shown on entry papers less additions included in appraised values to reflect currency revaluation	C.B.S. Imports Corp. v. U.S. (C.D. 4739)	New York Various articles
R80/234	Re, C. J. August 4, 1980	CBS Imports Corp.	73-12-03475, etc.	Export value	Appraised values shown on entry papers less additions included in appraised values to reflect currency revaluation	C.B.S. Imports Corp. v. U.S. (C.D. 4739)	New York Various articles

DECISION NUMBER	JUDGE & DATE OF DECISION	PLAINTIFF	COURT NO.	BASIS OF VALUATION	HELD VALUE	BASIS	PORT OF ENTRY AND MERCHANDISE
R80/235	Boe, J. August 4, 1980	Fisher-Voith Plastics, Machines, Inc.	77-2-00241	Export value	Invoice unit price of merchandise, net packed, less included ocean freight	Agreed statement of facts	Cleveland Injection blow molding machines
R80/236	Re, C. J. August 5, 1980	Adorence Co., Inc.	73-8-00234, etc.	Export value	Appraised values shown on entry papers less additions included in appraised values to reflect currency revaluation	C.B.S. Imports Corp. v. U.S. (C.D. 4739)	Los Angeles, Long Beach Various articles
R80/237	Re, C. J. August 5, 1980	Adorence Co., Inc.	74-1-00231	Export value	Appraised values shown on entry papers less additions included in appraised values to reflect currency revaluation	C.B.S. Imports Corp. v. U.S. (C.D. 4739)	Los Angeles, Long Beach Various articles
R80/238	Re, C. J. August 5, 1980	Adorence Co., Inc.	74-5-01321	Export value	Appraised values shown on entry papers less additions included in appraised values to reflect currency revaluation	C.B.S. Imports Corp. v. U.S. (C.D. 4739)	Los Angeles, Long Beach Various articles
R80/239	Re, C. J. August 5, 1980	Himalaya, Inc.	74-5-01318, etc.	Export value	Appraised values shown on entry papers less additions included in appraised values to reflect currency revaluation	C.B.S. Imports Corp. v. U.S. (C.D. 4739)	New York Various articles

R80/240	Re, C.J. August 5, 1980	Holly Stores Inc.	76-6-01459	Export value	Appraised values shown on entry papers less additions included in appraised values to reflect currency revaluation	C.B.S. Imports Corp. v. U.S. (C.D. 4739)	New York Wearing apparel, etc.
R80/241	Re, C.J. August 5, 1980	Korvettes, Division of Arlen Realty & Development Corp.	74-8-02238, etc,	Export value	Appraised values shown on entry papers less additions included in appraised values to reflect currency revaluation	C.B.S. Imports Corp. v. U.S. (C.D. 4739)	New York Various articles
R80/242	Re, C.J. August 5, 1980	Rotterdam Nuclear B.V., et al.	77-12-04868	Export value	Appraised values shown on entry papers less additions included in appraised values to reflect currency revaluation	C.B.S. Imports Corp. v. U.S. (C.D. 4739)	New Orleans Various articles
R80/243	Boe, J. August 5, 1980	Bus and Truck Supply Co.	76-9-02145	Export value	$54,875.00 per bus, plus or minus any increases or reductions in above price, due to addition or elimination of various parts, less 10%, less value of componets of U.S. origin allowed on liquidation plus value of any Michelin tires included in shipments	Agreed statement of facts	New Orleans Inter-city passenger buses
R80/244	Boe, J. August 5, 1980	Conti Rubber Products Inc.	76-2-00905, etc.	Foreign value	Claimed unit values (all in Deutsche mark) as listed on schedule attached to decision and judgment	Agreed statement of facts	Jacksonville (Tampa) Various automotive tires

DECISION NUMBER	JUDGE & DATE OF DECISION	PLAINTIFF	COURT NO.	BASIS OF VALUATION	HELD VALUE	BASIS	PORT OF ENTRY AND MERCHANDISE
R80/245	Boe, J. August 5, 1980	Conti Rubber Products Inc.	76-4-00971, etc.	Foreign value	Claimed unit values (all in Deutsche mark) as listed on schedule attached to decision and judgment	Agreed statement of facts	Baltimore Various automotive tires
R80/246	Boe, J. August 5, 1980	Conti Rubber Products Inc.	76-4-00973, etc.	Foreign value	Claimed unit values (all in Deutsche mark) as listed on schedule attached to decision and judgment	Agreed statement of facts	Chicago Various automotive tires
R80/247	Boe, J. August 5, 1980	Conti Rubber Products Inc.	77-3-00486, etc.	Foreign value	Claimed unit values (all in Deutsche mark) as listed on schedule attached to decision and judgment	Agreed statement of facts	Seattle Various automotive tires
R80/248	Boe, J. August 5, 1980	Conti Rubber Products Inc.	78-6-00067	Foreign value	Claimed unit values (all in Deutsche mark) as listed on schedule attached to decision and judgment	Agreed statement of facts	Boston Various automotive tires
R80/249	Boe, J. August 5, 1980	Federal Pacific Electric Co.	78-5-00882	Export value	Equal to invoice unit prices, net packed	Agreed statement of facts	Buffalo Switches, switch-board parts and relays
R80/250	Boe, J. August 5, 1980	Federal Pacific Electric Co.	79-8-01267	Export value	Equal to invoice unit prices, net packed	Agreed statement of facts	Buffalo Switches, switchboard parts and relays

R80/251	Boe, J. August 5, 1980	J. C. Penney	R61/514, etc.	Export value	Appraised unit values less 7.5%, net packed	Agreed statement of facts	Norfolk Gloves and sweaters

International Trade Commission Notices

Investigations by the U.S. International Trade Commission

DEPARTMENT OF THE TREASURY

The appended notices relating to investigations by the U.S. International Trade Commission are published for the information of Customs officers and others concerned.

R. E. CHASEN,
Commissioner of Customs.

[332-112]

Quarterly and Annual Reports Providing Information on Color Television Receivers and Certain Subassemblies Thereof

AGENCY: U.S. International Trade Commission.

ACTION: Institution of an investigation under the authority of section 332(b) of the Tariff Act of 1930, as amended (19 U.S.C. 1332(b)), to establish a permanent docket for the quarterly and annual reports concerning color television receivers and certain subassemblies thereof required by Presidential Proclamation 4769 of June 30, 1980 (45 F.R. 45237, July 2, 1980).

EFFECTIVE5DATE: July 1, 1980.

FOR FURTHER INFORMATION CONTACT: Mr. William Fletcher or Mr. Scott Baker, Machinery and Equipment Division, U.S. International Trade Commission, 701 E Street NW., Washington, D.C. 20436; telephone 202-523-0378, 202-523-0361, respectively.

SUPPLEMENTARY INFORMATION: On May 16, 1980, the U.S. International Trade Commission reported to the President (publication 1068) the results of its investigation under section 203(i)(3) of the Trade Act of 1974 (19 U.S.C. 2253(i)(3)). The Commission

advised that termination of import relief in effect with respect to color television receivers and subassemblies thereof from Taiwan and Korea will have an adverse impact on the domestic industry producing like or directly competitive articles.

After considering the advice of the Commission, the President determined that an extension of the orderly marketing agreements with the Coordinating Council for North American Affairs (representing Taiwan) and the Republic of Korea, covering color television receivers and certain subassemblies thereof, is in the national interest.

On June 30, 1980, the President issued Proclamation 4769 limiting, effective July 1, 1980, the number of color television receivers imported into the United States from Taiwan and Korea through June 30, 1982, unless earlier modified or terminated.

Paragraph (8) of Presidential Proclamation 4769 directs as follows:

> (8) The USITC shall issue reports and conduct the following surveys with respect to the certain color television receivers, and subassemblies thereof the subject of this proclamation:
>
> (a) *Quarterly.* Quarterly surveys by calendar quarter to obtain from producers in the United States monthly data on production, shipments, inventories, employment, man-hours, prices, and other economic factors indicative of conditions in the U.S. industry. The initial surveys shall cover the second quarter of 1980. Subsequent surveys shall cover individual quarters with the last such survey covering the quarter which ends not less than 60 days prior to the termination of the import relief. The USITC shall publish the results of the surveys within 45 days after the end of the surveyed quarter.
>
> (b) *Annual.* Annual surveys to obtain data from producers in the United States by calendar quarter on profits, capacity, and annual data on capital expenditures and research and development expenditures; and to obtain from importers data by calendar quarter on prices, orders, and inventories. The initial surveys shall cover the calendar year 1980, and the results shall be published by March 31, 1981. The results of subsequent surveys shall be published by March 31 of each year thereafter so long as the import relief is in effect.

By order of the Commission.

Issued: August 12, 1980.

KENNETH R. MASON,
Secretary.

In the Matter of CERTAIN AIRTIGHT CAST-IRON STOVES	Investigation No. 337–TA–69

Notice of Commission Order for Written Comments Regarding Relief, Bonding and the Public Interest

AGENCY: U.S. International Trade Commission.

ACTION: Written comments on relief, bonding, and the public interest.

SUMMARY: This request follows a recommended determination of the administrative law judge in this investigation on July 7, 1980. In her recommended determination the ALJ stated that the following respondents were in violation of section 337 of the Tariff Act of 1930 (19 U.S.C. 1337) by reason of unfair methods of competition and unfair acts in the importation or sale of certain airtight cast-iron stoves in the United States: Hearth Craft, Hutch Manufacturing Co., Fireplace Distributors, International Foundries, Harbor Sales Co., Crane Industries, Great Eastern Trading Co. Inc., Heritage Stove Co., Meteor Design International Ltd., Genial Jade Industrial Co., Pyramid International Co. Ltd., Justin Taiwan Industrial Co. Ltd., Cathay Overseas Trading Co., Taiwan Active Enterprises Co. Ltd., Tinpin Trading Co., Nan Shang Enterprises Co. Ltd., Linmore Enterprise Co. Ltd., Formosa May Inc., Hermix Industries Corp., Firebird Hardware Inc., Lee-Lin Enterprise Co. Ltd., Yulson Industries Co. Ltd., KFK Industrial Co. Ltd., Stratford Mfg. Co. Ltd., You Well Co. Ltd., Collins Co. Ltd., and Wood Heat. This notice requests comments on relief, bonding, and the public interest should the Commission determine that the above-named respondents are in violation of section 337. Copies of the Administrative Law Judge's recommendation may be obtained by interested persons by contacting the office of the Secretary, U.S. International Trade Commission, 701 E Street NW., Washington, D.C. 20436, telephone 202–523–0161.

DATES: Complainant shall file and serve on all parties of record and with the Secretary to the Commission a detailed proposed Commission action, including a proposed determination of bonding, a proposed remedy, and a discussion of the effects of its proposals on the public health and welfare, competitive conditions in the U.S. economy, the production of like or directly competitive articles in the United States, and U.S. consumers by no later than the close of business on Friday, August 29, 1980. The Commission's investigative staff shall file and serve on all parties of record a formal report reflecting its investigation of public interest factors to be considered by the Commission with the staff's recommendation and conclusions no later than the close of

business on Friday, September 5, 1980. Any other party, interested agency or department, public interest group, or other member of the public wishing to file written comments and information concerning the action which complainant has proposed, any available alternatives, and the advisability of any Commission action in light of the public interest considerations listed above must file those comments no later than the close of business on Friday, September 5, 1980. Comments should conform with Commission rule 201.8 (19 CFR 201.8) and should be addressed to Kenneth R. Mason, Secretary, U.S. International Trade Commission, 701 E Street NW., Washington, D.C. 20436.

FOR FURTHER INFORMATION CONTACT: Jeffrey S. Neeley, Office of the General Counsel, U.S. International Trade Commission, 701 E Street NW., Washington, D.C. 20436, telephone 202-523-0359.

SUPPLEMENTARY INFORMATION: This investigation began with publication by the Commission of a notice in the Federal Register on July 12, 1979 (44 F.R. 40732). Twenty-five parties were named as respondents. By notice published in the Federal Register (44 F.R. 58816) on October 11, 1979, the Commission named 26 additional respondents. A subsequent notice dated October 24, 1979 (44 F.R. 61269), named one more respondent. In her recommended determination of July 7, 1980, the Administrative Law Judge found that 27 respondents had engaged in one or more unfair methods of competition or unfair acts in the importation or sale in the United States of cast-iron wood-burning or coal-burning stoves which are airtight or represented to be airtight. All of the respondents found to be violating section 337 were in default.

WRITTEN COMMENTS REQUESTED: Should the Commission adopt the recommendation of the Administrative Law Judge, it must make determinations concerning the appropriate relief and bonding, if any, and it must consider the public interest. These issues are described below.

(a) *Relief.*—In the event that the Commission were to find a violation of section 337, it would issue (1) an order which could result in the exclusion from entry of certain airtight cast-iron stoves into the United States or (2) an order which could result in requiring respondents to cease and desist from unfair methods of competition or unfair acts in the importation and sale of these airtight cast-iron stoves. Accordingly, the Commission is interested in what relief should be ordered, if any.

(b) *Bonding.*—In the event that the Commission were to find a violation of section 337 and order some form of relief, that relief would not become final for a 60-day period during which the President would consider the Commission's determination. During this period, the airtight cast-iron stoves would be entitled to enter the United

States under a bond determined by the Commission and prescribed by the Secretary of the Treasury. Should the Commission determine that a bond is unnecessary, importation could continue during this period. Accordingly, the Commission is interested in what bond should be determined, if any.

(c) *The public interest.*—In the event that the Commission were to find a violation of section 337 and order some form of relief, the Commission must consider the effect of that relief upon the public interest. Accordingly, the Commission is interested in the effect of any exclusion order or cease and desist order upon (1) the public health and welfare, (2) competitive conditions in the U.S. economy, (3) the production of like or directly competitive articles in the United States, and (4) U.S. consumers.

(d) *Request for oral argument and oral presentation.*—At present, no oral argument is planned with respect to the recommended determination of the presiding officer concerning whether there is a violation of section 337 of the Tariff Act of 1930 in this matter. Similarly, no oral presentation is planned with respect to the relief, bonding, and public interest factors set forth in section 337 (d) and (f) of the Tariff Act of 1930. (19 U.S.C. 1337). However, the Commission will consider requests for an oral argument or an oral presentation if they are received by the Secretary of the Commission not later than September 19, 1980.

By order of the Commission.

Issued: August 15, 1980.

KENNETH R. MASON,
Secretary.

[332-73]

Notice of Release for Public Comment of Provisionally Adopted Chapters of the Harmonized Commodity Description and Coding System

AGENCY: U.S. International Trade Commission.

ACTION: Release for public comment, pursuant to Commission investigation No. 332-73, under the authority of section 332(g) of the Tariff Act of 1930, as amended, of drafts of the following chapters of the Harmonized Commodity Description and Coding System as provisionally adopted by the Harmonized System Committee and the Nomenclature Committee of the Customs Cooperation Council.

Chapter 27: Mineral fuels, mineral oils and products of their distillation; bituminous substances; mineral waxes.

Chapter 31: Fertilizers.

Chapter 32: Tanning or dyeing extracts; tannings and their derivatives; dyes, pigments, and other coloring matter; paints and varnishes; putty and other mastics; inks.

Chapter 38: Miscellaneous chemical products.

Chapter 84: Nuclear reactors, boilers, machinery and mechanical appliances; parts thereof.

Chapter 85: Electrical machinery and equipment; parts thereof.

Chapter 93: Arms and ammunition; parts thereof.

Chapter 94: Furniture; bedding, mattresses, mattress supports, cushions and similar stuffed furnishings; lamps and lighting fittings, not elsewhere specified or included; illuminated signs, illuminated nameplates and the like; prefabricated buildings.

Chapter 99: Works of art, collectors' pieces, and antiques.

WRITTEN SUBMISSIONS: Parties wishing to submit written comments should do so by December 1, 1980.

HEARING: Parties desiring the Commission to hold a hearing on these draft chapters of the Harmonized Code should contact the Secretary of the Commission by October 1, 1980, and show good cause for holding a hearing.

COPIES OF DOCUMENTS: Copies of the chapters which are subject of this notice are available for public inspection at the offices of the Commission, 701 E Street NW., Washington, D.C. 20436, or at 6 World Trade Center, New York, N.Y. 10048. The Commission will also send copies to interested parties upon request.

FOR FURTHER INFORMATION CONTACT: Eugene A. Rosengarden, Director, Office of Tariff Affairs, U.S. International Trade Commission, 701 E Street, NW., Washington, D.C. 20436, telephone 202–523–0370.

SUPPLEMENTARY INFORMATION: In its public notices of February 8, 1980 (45 F.R. 9828 of Feb. 13, 1980), and March 21, 1980 (45 F.R. 19696 of Mar. 26, 1980), the Commission identified 59 chapters of the Harmonized Commodity Description and Coding System (Harmonized System) for which texts had been provisionally adopted by the Harmonized System and Nomenclature Committees of the Customs Cooperation Council. The purpose of the above mentioned notices was to invite comments and views of interested parties with respect to the 59 chapters.

Since the release of the March 21, 1980 notice, provisionally adopted tests of nine further chapters have been published by the Customs Cooperation Council. This notice hereby amends the previous notice by adding these nine new chapter texts to the list of texts released for public comment.

This notice is being issued pursuant to Commission investigation No. 332–73, instituted on January 31, 1975 (40 F.R. 6329), under section 332(g) of the Tariff Act of 1930, as amended. The investigation was initiated in accordance with section 608(c) of the Trade Act of 1974, which provides, in part, that the Commission shall institute an investigation which would provide the basis for—

> (2) full and immediate participation by the U.S. International Trade Commission in the U.S. contribution to technical work of the Harmonized Systems [sic] Committee under the Customs Cooperation Council to assure the recognition of the needs of the U.S. business community in the development of a Harmonized Code reflecting sound principles of commodity identification and specification and modern producing methods and trading practices * * *.

The Harmonized System is being developed by the Customs Cooperation Council (CCC), an 80-member international organization with headquarters in Brussels, as an international commodity classification system which will be adaptable for modernized customs tariff nomenclature purposes and for recording, handling, and reporting of transactions in international trade. The Harmonized System will be based on, and in many respects will be an extension of, the Customs Cooperation Council Nomenclature (CCCN), formerly known as the Brussels Tariff Nomenclature (BTN).

Currently, the technical team working under auspices of the CCC prepares drafts of the various chapters of the Harmonized System for consideration by the Harmonized System Committee, which was established in order to develop the code. These drafts are forwarded to the members and observers of the Committee for their review and submission of written comments. The Committee meets three times a year to consider these drafts and the written comments and presentations of the various delegations. The review of a particular chapter or group of chapters may extend to more than one meeting.

In its public notices of May 4, 1976 (41 F.R. 18716 of May 6, 1976), August 9, 1976 (41 F.R. 34370 of Aug. 13, 1976), December 20, 1976 (41 F.R. 55948 of Dec. 23, 1976), September 1, 1977 (42 F.R. 44852 of Sept. 7, 1977), February 7, 1978 (43 F.R. 5902 of Feb. 10, 1978), October 16, 1978 (43 F.R. 48723 of Oct. 19, 1978), February 14, 1979 (44 F.R. 10435 of Feb. 20, 1979), May 16, 1979 (44 F.R. 29740 of May 22, 1979), September 5, 1979 (44 F.R. 53112 of Sept. 12, 1979), January 28, 1980 (45 F.R. 7648 of Feb. 4, 1980), February 1, 1980 (45 F.R. 8168 of Feb. 6, 1980), May 20, 1980 (45 F.R. 36231 of May 29, 1980), and May 23, 1980 (45 F.R. 36230 of May 29, 1980), the Commission identified those chapters which have been considered

thus far by the Harmonized System Committee, and the chapters for for which a technical team draft has been released.

Following its deliberations on the draft chapters, the Harmonized System Committee forwards recommended texts for the chapters to the Nomenclature Committee. The Nomenclature Committee, which supervises the operations of the Convention on Nomenclature for the Classification of Goods in Customs Tariffs and is responsible for insuring international uniformity in the interpretation and application of the CCCN, reviews the recommended texts for the Harmonized System and returns the draft chapters which it has approved to the Harmonized System Committee. The draft chapters which have thusly been provisionally approved by both committees are then held in abeyance pending final revision sessions. It is anticipated that the Harmonized System Committee will begin final revision sessions early in 1981.

The draft chapters released for public comment today have been provisionally adopted by the Harmonized System Committee and the Nomenclature Committee according to the above-described procedure. As further chapters are adopted, the Commission will issue future notices requesting public comment.

In 1971, the Department of the Treasury established an Interagency Advisory Committee on Customs Cooperation Council Matters in order to provide a basis for interested Federal agencies to participate with respect to CCC matters. In order to establish and develop U.S. programs and policies with respect to the Harmonized System, the interagency committee has instituted procedures which take into account the provisions of section 608(c) of the Trade Act of 1974, which call for the Commission to contribute to the U.S. technical input to the Harmonized System Committee. Under these procedures the Commission is preparing technical comments and proposals on the various chapters of the Harmonized System for consideration by the interagency committee in the determination of U.S. proposals with respect to the Harmonized Code. In making proposals, the Commission is seeking and taking into consideration the views of trade and industry and other interested parties and of interested Government agencies.

By order of the Commission.

Issued: August 15, 1980.

KENNETH R. MASON,
Secretary.

Investigation No. 337-TA-67

Certain Inclined-Field Acceleration Tubes

Termination of Investigation With Respect to the University of Pittsburgh

AGENCY: U.S. International Trade Commission.

ACTION: Termination of investigation No. 337-TA-67, Certain Inclined-Field Accleration Tubes, with respect to respondent University of Pittsburgh.

Notice is hereby given that the Commission, having on June 25, 1980, published for comment a licensing agreement between complainant High Voltage Engineering Corp., South Bedford Street, Burlington, Mass., and respondent University of Pittsburgh, Pittsburgh, Pa., settling complainant's patent infringement claims against the university (45 F.R. 42893), and having received no comments thereon, hereby terminates this investigation with respect to the University of Pittsburgh.

EFFECTIVE DATE: August 13, 1980.

FOR FURTHER INFORMATION CONTACT: Louis Mastriani, Commission investigative attorney, 202-523-0489; or Michael Jennison, Office of the General Counsel, 202-523-0189.

AUTHORITY: The authority for termination of a respondent is contained in section 337 of the Tariff Act of 1930 (19 U.S.C. 1337) and 19 CFR 210.51-55.

SUPPLEMENTARY INFORMATION: Any party wishing to petition for reconsideration of the Commission's action must do so within 14 days of service of the Commission order. Petitions must be in accord with section 210.56 of the Commission's Rules of Practice and Procedure (19 CFR 210.56).

Copies of the Commission's action and order and any other public documents in this investigation are available to the public during official working hours (8:45 a.m. to 5:15 p.m.) in the Office of the Secretary, U.S. International Trade Commission, 701 E Street NW., Washington, D.C. 20436, telephone 202-523-0161.

Notice of the institution of this investigation was published in the Federal Register of June 27, 1979 (44 F.R. 32567).

By order of the Commission.

Issued: August 13, 1980.

Kenneth R. Mason,
Secretary.

In the Matter of CERTAIN APPARATUS FOR THE CONTINUOUS PRODUCTION OF COPPER ROD	Investigation No. 337-TA-89

Notice of Investigation

Notice is hereby given that a complaint was filed with the U.S. International Trade Commission on July 29, 1980, and amended on August 1, 1980, and August 5, 1980, under section 337 of the Tariff Act of 1930 (19 U.S.C. 1337) on behalf of Southwire Company of Carrollton, Ga., alleging that unfair methods and unfair acts exist in the importation into the United States of certain apparatus for the continuous production of copper rod, or in their sale, because the apparatus are being made in accordance with the claims of U.S. Letters Patent 4,129,170. The complaint alleges that the effect or tendency of the unfair methods of competition and unfair acts is to destroy or substantially injure an industry, efficiently and economically operated, in the United States.

Complainant requests that the Commission, after a full investigation has been conducted, order permanent exclusion from entry into the United States of the imports in question and provide all other necessary and proper relief. Complainant also requests that the Commission conduct expedited proceedings and issue a temporary exclusion order prohibiting entry into the United States of the imports in question.

Having considered the complaint, the Commission on August 11, 1980, ordered that—

(1) Pursuant to subsection (b) of section 337 of the Tariff Act of 1930 (19 U.S.C. 1337(c)), an investigation be instituted to determine whether there is reason to believe that there is a violation and whether there is a violation of subsection (a) of section 337 in the unauthorized importation of certain apparatus for the continuous production of copper rod, or in their sale, by reason that such apparatus are made in accordance with the claims of U.S. Letters Patent 4,129,180, the effect or tendency of which is to destroy or substantially injure an industry, efficiently and economically operated, in the United States;

(2) That for the purposes of this investigation so instituted, the following are hereby named as parties upon which this notice of investigation shall be served:

(a) The complainant is—

Southwire Company
126 Fertilla Street
Carrollton, Ga. 30119

(b) The respondents are the following companies alleged to be engaged in the unauthorized importation of such articles into the United States, or in their sale, and are parties upon which the complaint is to be served:

Fried, Krupp G.m.b.H.
Essen, Federal Republic of Germany

Krupp International Inc.
550 Mamaroneck Avenue
Harrison, N.Y. 10528

(c) Donald Dinan and Brooke Murdock, Unfair Import Investigations Division, U.S. International Trade Commission, 701 E Street NW., Washington, D.C. 20436, shall be the Commission investigative attorneys, parties to this investigation; and

(3) Donald K. Duvall, Chief Administrative Law Judge, U.S. International Trade Commission, shall designate the presiding officer who is instructed to issue a recommended determination as to temporary relief by September 26, 1980, and the Commission hereby shortens to 5 days the period for filing exceptions to the recommended determination and for filing alternative findings of fact and conclusions of law under section 210.54 of the Commission's rules.

The presiding officer shall also establish a schedule for oral presentations concerning the remedy, bonding, and public interest considerations for the purpose of creating an administrative record to be certified to the Commission by September 26, 1980. In addition to appearances and oral presentations on the remedy, bonding, and public interest considerations, the presiding officer shall provide for a prehearing briefing schedule to be published in the Federal Register soliciting the written views of any persons interested in this phase of the investigation. The transcript of the oral presentations, the prehearing briefs, and the other written comments will comprise the administrative record concerning remedy, bonding, and the public interest factors to be certified to the Commission. The Commission shall issue its determination on temporary relief by October 29, 1980.

The complaint is available for inspection by interested persons at the Office of the Secretary, U.S. International Trade Commission, 701 E Street NW., Washington, D.C. 20436, and in the Commission's New York Office, 6 World Trade Center, Suite 655, New York, N.Y. 10048.

By order of the Commission.

Issued: August 12, 1980.

KENNETH R. MASON,
Secretary.

(TA-201-44)

CERTAIN MOTOR VEHICLES AND CERTAIN BODIES CHASSIS THEREFOR

Notice of Receipt of Ford Motor Co. Petition

On August 4, 1980, the Commission received a petition for import relief filed by the Ford Motor Co. (Ford) under section 201 of the Trade Act of 1974 (19 U.S.C. 2251) with respect to imports of passenger cars, light trucks, vans, and utility vehicles. In its petition Ford refers to the Commission's ongoing investigation, instituted June 30, 1980, following receipt of a petition filed by the UAW. Ford urges the expeditions completion of the investigation and stated its intention to participate in the Commission's public hearing set to begin October 8, 1980. Ford does not ask for a second investigation or a change in scope of the present investigation or Commission procedures with respect to the investigation. Ford states that it is filing its own petition to provide the Commission with an additional perspective on the nature and extent of the industry's injury and to emphasize the importance of the requested relief to the domestic producers.

Since the imported articles against which Ford requests relief are already the subject of an investigation, and since Ford is not seeking a second investigation or a change in scope of the present investigation, the Commission considers Ford to be a copetitioner for import relief in the investigation that is already underway.

Notice of institution of the investigation and public hearings was published in the Federal Register of July 7, 1980 (45 F.R. 45731); notice of change in Commission procedures was published in the Federal Register of July 22, 1980 (45 F.R. 48996); and notice of the place of the Commission hearing was published in the Federal Register of August 6, 1980 (45 F.R. 52280).

By order of the Commission.

Issued: August 18, 1980.

KENNETH R. MASON,
Secretary.

[19 CFR, Part 207]

Advance Notice of Proposed Rulemaking

AGENCY: U.S. International Trade Commission.

ACTION: This is an advanced notice of proposed rulemaking. The Commission solicits suggestions from any interested persons with

regard to proposed amendments to part 207 of the Commission's Rules of Practice and Procedure (19 CFR 207, 44 F.R. 76457).

SUMMARY: On December 26, 1979, the Commission published final rules to implement the extensive changes in the U.S. countervailing duty and antidumping laws required by the Trade Agreements Act of 1979. These final rules set forth procedures for the conduct of Commission investigations under sections 303 and title VII of the Tariff Act of 1930 (19 U.S.C. 1303 and 1641–1677), and sections 102–107 of the Trade Agreements Act of 1979, Public Law No. 96–39, 93 Stat. 144. On the basis of the administrative experience with these rules since January 1, 1980, the Commission is considering proposing amendments in specific areas more fully described in the supplementary information portion of this notice. Prior to proposing specific amendments, the Commission is soliciting suggestions for the contents of proposed rules in order to take into consideration public comments suggesting changes in the provisions in these rules.

DATE: Comments and suggestions concerning the proposed rulemaking should be submitted on or before (45 days after the publication of this notice in the Federal Register).

ADDRESS: Comments and suggestions concerning the proposed rulemaking should be submitted to the Secretary, U.S. International Trade Commission, 701 E Street NW., Washington, D.C. 20436.

FOR FURTHER INFORMATION CONTACT: Edward Easton, Office of the General Counsel, U.S. International Trade Commission, 701 E Street NW., Washington, D.C. 20436, telephone 202–523–0379.

SUPPLEMENTARY INFORMATION: Subpart A of part 207 contains general rules applicable to all Commission investigations under section 303 and title VII of the Tariff Act and sections 102 through 107 of the Trade Agreements Act. In addition, subpart A implements provisions of title X of the Trade Agreements Act which relate to judicial review of Commission actions. These rules concern definitions of key terms, the service of documents, the maintenance of an administrative record, maintenance and certain records of ex parte meetings, progress reports concerning Commission investigations, limited disclosure of certain confidential information under protective order, Commission questionnaires and subpenas, and determinations by an evenly divided Commission.

Section 207.3, concerning the service of documents, requires that any party submitting a document for inclusion in the record of the investigation be served on all other parties to the investigation.

Commission rules do not require the filing of a certificate of service, however, and the Commission is considering an amendment to require that a certificate of service be filed for the record.

Section 207.7, concerning the limited disclosure of certain confidential information under protective order, does not permit in-house counsel access to confidential information. This exclusion has been criticized by the law departments of many firms and by many professional associations. The Commission is considering an amendment to give access to confidential information under protective order to only those counsel, both in-house and retained, who do not advise their firm's or their client's operating departments and who, therefore, would not be in a position where knowledge of a competitor's confidential information gained under protective order would be relevant to other areas of counsel's endeavor. Under the proposed rule counsel seeking access to confidential information under Commission protective orders would have to sign a statement to this effect.

Subpart B of part 207 provides a procedural framework for preliminary investigations under section 303 and title VII of the Tariff Act. These rules concern the filing of petitions, the contents of petitions, notice of initiation of preliminary investigations by the Director of Operations, termination of preliminary investigation by the Department of Commerce, submission of written statements and attendence at a conference, a recommendation to the Commission by the Director of Operations, the Commission's determination, and a notice of the Commission's preliminary determination.

Sections 207.13 and 207.15 of these rules concern the delegation of the conduct of preliminary investigations to the Director of Operations. Section 207.16 concerns the recommendation of the Director to the Commission concerning the disposition of the case. Prior to their promulgation, these rules were critized in their proposed state. Criticisms included fears that parties would be deprived of an opportunity to make effective oral presentations to the agency and that the Commission would rely excessively on its staff instead of exercising its own judgment in making preliminary determinations. The Commission is interested in whether the public considers the delegation a successful practice and whether the Commission ought to continue the practice.

Subpart C of part 207 provides procedures for final determinations in antidumping and countervailing duty investigations. These rules include provisions for a notice of investigation, the placing of a nonconfidential staff report on the public record before a hearing, the submission of prehearing statements, appearances at and conduct of public hearings, posthearing submissions, the Commission deter-

mination, factors considered by the Commission in making a determination, the standard for the Commission's determination, and the publication of a notice of the final determination.

Section 207.22 provides criteria for the filing of prehearing statements. Another Commission rule, section 201.12(d) provides that "Copies of witness' prepared statements should be filed with the Office of the Secretary of the Commission not less than 3 business days prior to the hearing * * * " (19 CFR 201.12(d) as amended at 44 F.R. 76476, Dec. 26, 1979.) The purpose of section 201.12(d) is to give Commissioners time before a hearing within which to review the prepared statements. The large number of investigations being conducted since January 1, 1980, has required that section 201.12(d) be waived in investigations currently scheduled. The waiver of the requirement for filing prepared testimony has led to surprise at several hearings when materials not given a significant treatment in prehearing statements were instead filed as prepared testimony. The policy of the Commission shall continue to be to reject prepared testimony which goes beyond matters raised in prehearing briefs and to continue to require that parties disclose the nonconfidential information and arguments which they believe relevant to the Commission's determination in their prehearing statements. With respect to the deadline for filing witnesses' statements, however, the rule has been waived in most of the antidumping and countervailing duty investigations conducted since January 1, 1980, and this indicates that it may not be appropriate for these investigations. Comments are solicited as to whether these rules require further clarification or change.

Subpart D contains rules for implementing sections 102, 103, and 104 of the Trade Agreements Act with respect to preexisting countervailing duty orders and antidumping and countervailing duty investitions pending as of January 1, 1980, the effective date of the Trade Agreements Act.

At the time the Commission promulgated regulations for this subpart, the Commission did not anticipate that domestic industries which had successfully petitioned for countervailing duty orders prior to the enactment of the Trade Agreements Act might not wish to participate in a Commission investigation concerning material injury under section 104 of the Act. Inasmuch as section 104 was drafted for the purpose of making the enforcement of countervailing duty orders issued prior to January 1, 1980, which were not subject to the material injury requirement imposed by section 701 of the Tariff Act, consistent with orders issued after that date, the Commission has invoked the authority of section 704 of the Tariff Act to terminate investigations under section 104 upon the request of the original petitioner

to withdraw its petition. This discretion to terminate cases under section 704 has been applied on an ad hoc basis. The Commission is considering proposing a regulation to terminate section 104 investigations similar in content to section 207.40(a) of the current rules.

Subpart E contains rules for the termination and suspension of antidumping and countervailing duty investigations and investigations to review outstanding determinations and to reopen investigations.

After reaching its determination in investigation No. AA1921-145A (Review), Electric Golf Cars from Poland (45 F.R. 39581, June 11, 1980), the Commission decided to propose amendments to section 207.45, the rule which implements section 751 of the Tariff Act which, in turn, authorizes review investigations. The Federal Register notice of this proposed rulemaking was published on August 14, 1980 (45 F.R. 54086). The period for public comment on the proposed amendments to section 207.45 will close on September 15, 1980.

Public comments are solicited on these matters and any other aspect of the conduct of antidumping and countervailing duty investigations by the Commission.

By order of the Commission.

Issued: August 18, 1980.

KENNETH R. MASON,
Secretary.

In the Matter of CERTAIN SLIDE FASTENER STRINGERS, AND MACHINES AND COMPONENTS THEREOF FOR PRODUCING SUCH SLIDE FASTENER STRINGERS SACK	Investigation No. 337-TA-85

Notice of Commission Hearing on the Presiding Officer's Recommendation and on Relief, Bonding and the Public Interest, and of the Schedule for Filing Written Submissions

AGENCY: U.S. International Trade Commission.

ACTION: The scheduling of oral argument and briefing for Investigation No. 337-TA-85, Certain Slide Fastener Stringers, and Machines and Components Thereof for Producing Such Slide Fastener Stringers.

Notice is hereby give that the presiding officer has filed her recommended determination of complainant's request for a temporary exclusion order on July 31, 1980. She has also certified the evidentiary record to the Commission for its consideration. Interested persons may obtain copies of the presiding officer's recommendation (and

all other public documents) by contacting the Office of the Secretary to the Commission, 701 E Street NW., Washington, D.C. 20436.

COMMISSION HEARING: The Commission will hold a hearing beginning at 10 a.m., e.d.t., on August 15, 1980, in the Commission's hearing room (room 331), 701 E Street NW., Washington, D.C. 20436, for two purposes. First, the Commission will hear oral argument on the presiding officer's recommendation that temporary exclusion order should not issue under section 337(f) of the Tariff Act of 1930, as amended. Second, the Commission will hear presentations concerning appropriate relief, bonding, and the public-interest factors for consideration in the event that the Commission determines that there is reason to believe that there is a violation of section 337. These matters will be heard on the same day in order to facilitate the completion of this investigation within time limits established under law and to minimize the burden of this hearing upon the parties. The procedure for each portion of the hearing follows.

ORAL ARGUMENT: A party to the Commission's investigation or an interested Federal agency wishing to present to the Commission an oral argument concerning the presiding officer's recommendation will be limited to 20 minutes. In addition, such party or agency may present oral argument of up to 10 minutes on the questions of relief, bonding, and the public interest. The oral arguments will be held in this order: Complainant, respondent, interested agencies, and Commission investigative staff. The complainant may reserve up to 5 minutes of its time for rebuttal. The issues of relief, bonding, and public interest are more fully described below.

RELIEF: If the Commission finds that there is reason to believe that a violation of section 337 has occurred, it may issue (1) an order which could result in the temporary exclusion from entry of certain slide fastener stringers, and machines and components thereof for producing such slide fastener stringers into the United States or (2) an order which could result in requiring the respondent to cease and desist from alleged unfair methods of competition or unfair acts in the importation and sale of such slide fastener stringers, and machines and components thereof for producing such slide fastener stringers. Accordingly, the Commission is interested in what relief, if any, should be ordered.

BONDING: If the Commission finds that there is reason to believe that a violation of section 337 has occurred and orders some form of relief, the President has up to 60 days to approve or disapprove the Commission's report. During this period the certain slide fastener stringers, and machines and components thereof for producing slide

fastener stringers would be entitled to enter the United States under a bond determined by the Commission and prescribed by the Secretary of the Treasury. Accordingly, the Commission is interested in what bond, if any, should be assessed.

PUBLIC INTEREST: If the Commission concludes that there is reason to believe that a violation of section 337 has occurred and orders some form of relief, it must consider the effect of that relief upon the public. Accordingly, the Commission is interested in the effect of any exclusion or cease and desist order upon (1) the public health and welfare, (2) competitive conditions in the U.S. economy, (3) the production of like or directly competitive articles in the United States, and (4) U.S. consumers.

WRITTEN SUBMISSIONS: The Commission requests that written submissions of four types be filed in connection with these proceedings before the Commission.

1. *Briefs on the presiding officer's recommendation.*—Parties to the Commission's investigation, interested agencies, and the Commission investigative staff are encouraged to file briefs concerning exceptions to the presiding officer's recommendation. Briefs must be served by hand on all parties of record to the Commission's investigation on or before the date they are filed with the Secretary. Statements made in briefs should be supported by references to the record. Persons with the same positions on the issues are encouraged to consolidate their briefs, if possible. Briefs must be filed no later than the close of business on August 7, 1980. Parties are encouraged to consolidate the filing of exceptions to the presiding officer's recommended determination and alternative findings of fact and conclusions of law under section 210.54 of the rules with this briefing requirement in order to eliminate duplicative filings. The filing date for such exceptions and alternative findings and conclusions is also August 7, 1980.

2. *Reply briefs to briefs on the presiding officer's recommendation.*—Parties to the Commission's investigation, interested agencies, and the Commission investigative staff are encouraged to file reply briefs to the briefs of opposing parties concerning exceptions to the presiding officer's recommendation in order to give greater focus to the issues. Reply briefs must be filed no later than the close of business August 12, 1980.

3. *Posthearing briefs.*—Parties to the Commission's investigation, interested agencies, and the Commission investigative staff may be asked to respond to questions in writing or to brief particular issues in more detail during the August 15, 1980 hearing. Such responses and additional briefing should be incorporated in posthearing briefs.

Posthearing briefs must be filed no later than the close of business on August 20, 1980.

4. *Requests to participate in the hearing.*—Written requests to appear at the Commission hearing must be filed by August 12, 1980.

ADDITIONAL INFORMATION: The original and 19 true copies of all briefs and written comments and any written request to participate must be filed with the Secretary to the Commission. Any person desiring to discuss confidential information, or to submit a document (or a portion thereof) to the Commission in confidence, must request in camera treatment. Such request should be directed to the chairman of the Commission and must include a full statement of the reasons why the Commission should grant such treatment. Documents or arguments reflecting confidential information approved by the Commission for in camera treatment will be treated accordingly. All nonconfidential written submissions will be open to public inspection at the Secretary's Office. Notice of the Commission's investigation was published in the Federal Register of June 13, 1980 (45 F.R. 40242).

By order of the Commission.

Issued: August 7, 1980.

KENNETH R. MASON,
Secretary.

303-TA-14 (Preliminary)

ANIMAL IDENTIFICATION TAGS FROM NEW ZEALAND

Notice of Institution of Preliminary Countervailing Duty Investigation and Scheduling of Conference

Investigation instituted.—Following receipt of a petition on August 1, 1980, filed by Y-Tex Corporation, Cody, Wyo., a domestic producer of plastic animal identification tags, the U.S. International Trade Commission on August 5, 1980, instituted a preliminary countervailing duty investigation under section 303 of the Tariff Act of 1930, as amended by section 103 of the Trade Agreements Act of 1979, to determine whether there is a reasonable indication that an industry in the United States is materially injured, or is threatened with material injury, or the establishment of an industry in the United States is materially retarded, by reason of allegedly subsidized imports from New Zealand of plastic animal identification tags provided for in item 666.00 of the Tariff Schedules of the United States. This investigation will be subject to the provisions of part 207 of the Com-

mission's Rules of Practice and Procedure (19 CFR 207, 44 F.R. 76457) and, particularly, subpart B thereof, effective January 1, 1980.

Written submissions.—Any person may submit to the Commission on or before August 27, 1980, a written statement of information pertinent to the subject matter of the investigation. A signed original and 19 copies of such statements must be submitted.

Any business information which a submitter desires the Commission to treat as confidential shall be submitted separately and each sheet must be clearly marked at the top "Confidential business data." Confidential submissions must conform with the requirements of section 201.6 of the Commission's Rules of Practice and Procedure (19 CFR 201.6). All the written submissions, except for confidential business data, will be available for public inspection.

Conference.—The Director of Operations of the Commission has scheduled a conference in connection with the investigation for August 22, 1980, at the U.S. International Trade Commission Building, 701 E Street NW., Washington, D.C. Parties wishing to participate in the conference should contact the staff investigator, Mr. William Schechter, 202–523–0300. It is anticipated that parties in support of the petition for countervailing duties and parties opposed to such petition will each be collectively allocated 1 hour within which to make an oral presentation at the conference. Further details concerning the conduct of the conference may be obtained from Mr. Schechter.

Inspection of petition.—The petition filed in this case is available for public inspection at the Office of the Secretary, U.S. International Trade Commission, and at the New York City office of the U.S. International Trade Commission located at 6 World Trade Center.

Issued: August 8, 1980.

KENNETH R. MASON,
Secretary.

(19 CFR 207.45)

Investigations to Review Outstanding Antidumping and Countervailing Duty Determinations and Outstanding Suspension Agreements

AGENCY: U.S. International Trade Commission.

ACTION: Proposed rule amendments.

SUMMARY: The proposed amendment sets forth procedures for the conduct of Commission investigations to review suspension agreements under sections 704 and 734 of the Tariff Act of 1930 and determinations under sections 704(h)(2), 705(b), 734(h)(2), and 735(b) of the Tariff Act and determinations under the Antidumping Act, 1921,

and the duty-free merchandise provisions of section 303(b) of the Tariff Act.

DATE: Comments on the proposed sule should be submitted on or before (30 days after publication of this notice in the Federal Register).

ADDRESS: Comments on the proposed rule should be submitted to the Secretary, U.S. International Trade Commission, 701 E Street NW., Washington, D.C. 20436.

FOR FURTHER INFORMATION CONTACT: Edward Easton, Office of the General Counsel, U.S. International Trade Commission, 701 E Street NW., Washington, D.C., telephone 202-523-0379.

SUPPLEMENTARY INFORMATION: Section 207.45 of the Commission's Rules of Practice and Procedure implements section 751 of the Tariff Act. The proposed amendments to the rule set forth a new procedure for the Commission decision whether to review an outstanding antidumping or countervailing duty determination upon receipt of a request for such a determination. The proposed amendment also changes the determination of the Commission in these investigations and investigations to review a suspension agreement accepted under section 704 or 734 of the Tariff Act to conform to the provisions of section 751 of the Tariff Act.

Section 207.45(a)(1) makes reference to alleged changed circumstances in describing the Commission's determination in investigations to review a suspension agreement accepted under section 704 or 734 of the Tariff Act. The proposed amendments would require the Commission to determine whether a request for a review of a suspension agreement "shows changed circumstances sufficient to warrant the review" prior to the institution of an investigation to determine "whether, in light of the changed circumstances, the agreement continues to eliminate completely the injurious effect of imports of the merchandise." This sequence and the standard for the determination are provided for in section 751 of the Tariff Act. Accordingly, the Commission proposes to remove the word alleged from section 207.45(a)(1).

Section 207.45(a)(2) provides the standard for a Commission determination in investigations to review outstanding antidumping and countervailing duty determinations. The subsection makes reference to "changed circumstances * * * which indicate" that an industry in the United States would not be threatened or the establishment of such an industry would not be materially retarded, if the countervailing duty order or antidumping order were modified or revoked. The linkage of changed circumstances with the threat of material injury or the possibility of material retardation is not pro-

vided for in section 751 of the Tariff Act and could possibly have a more restrictive effect than a standard relying only on the concepts of threat of material injury and the possibility of material retardation. Accordingly, the Commission proposes to delete the reference to changed circumstances in section 207.45(a)(2).

The Commission also proposes to change the formulation of the material injury determination in section 207.45(a) from the threat of material injury or material retardation to the standard found for countervailing duty investigations under section 104(b) of the Trade Agreements Act of 1979 (19 U.S.C. 1671 note); i.e., whether an industry in the United States would be materially injured, or would be threatened with material injury, or the establishment of an industry in the United States would be materially retarded, by reason of imports of the merchandise covered by the countervailing duty order or the antidumping order if the order were to be revoked.

Section 207.45(b) provides for the procedures to be followed in review investigations authorized by section 751 of the Tariff Act. At present section 207.45(b) provides that the procedures set forth in subpart C of part 207, title 19, shall be applicable to investigations conducted under section 207.45. This section also provides that investigations conducted under section 207.45 shall be completed within 120 days. Inquiries have been made concerning the starting date for the calculation of the 120-day period. The proposed amendment of this subsection would have the 120-day period run from the date of the institution of an investigation.

Section 207.45(b) as it is now written does not provide the bifurcated procedure suggested in section 751 of the Tariff Act. Section 751 provides that the requests for the review of suspension agreements or countervailing duty or antidumping determinations must show changed circumstances sufficient to warrant a review. Only after the Commission is satisfied that the showing required is sufficient is the institution of a review investigation called for. Section 207.45(b) has been redrafted to provide for this sequential, bifurcated procedure. In the event that the Commission finds that a request does not show changed circumstances sufficient to warrant a review, the Commission shall publish a notice to this effect in the Federal Register. This publication is provided for in subsection 516A(a)(1)(C) of the Tariff Act.

The proposed rule reads as follows:

Section 207.45 Investigation to reviewing outstanding determination.

(a) *Purpose.* Upon the receipt of information concerning, or upon a request for a review of, a determination concerning a suspension agreement accepted under section 704 or 734 of the

act or an affirmative determination made under section 704(h)(2), 705(b), 734(h)(2), or 735(b) of the act, or under the Antidumping Act or section 303(b) of the act, which shows changed circumstances sufficient to warrant a review of such determination, the Commission shall institute an investigation to determine, as the case may be (1) whether, in light of the changed circumstances, the agreement continues to eliminate completely the injurious effect of imports of the merchandise; or (2) whether an industry in the United States would be materially injured, or would be threatened with material injury, or the establishment of an industry in the United States would be materially retarded, by reason of imports of the merchandise covered by the countervailing duty order or the antidumping order if the order were to be revoked. In the absence of good cause shown, no investigation under this section 207.45 shall be instituted within 24 months of the date of publication of the notice of the suspension or determination.

(b) *Procedures.*—(1) *Commencement of proceedings*—

(A) *Upon receipt of a request.*—A proceeding is commenced by filing with the Commission the original and 19 true copies of a request. Requests for a review investigation may be filed by any person. All requests shall set forth a description of changed circumstances sufficient to warrant the institution of a review investigation by the Commission under this section.

(B) *Upon the initiative of the Commission.*—Upon receipt of information concerning a suspension agreement accepted under section 704 or 734 of the act or an affirmative determination made under 704(h)(2), 705(b), 734(h)(2), or 735(b) of the act, which shows changed circumstances sufficient to warrant a review of such determination, the Commission shall initiate an investigation to review such determination.

(2) *Institution of an investigation.*—Within 30 days after receipt of a request or, in exceptional circumstances, as soon after receipt of a request as possible, the Commission shall determine whether the request shows changed circumstances sufficient to warrant a review and, if so, shall institute an investigation. The investigation shall be instituted by notice published in the Federal Register and shall be completed within 120 days of the date of institution.

If the Commission determines that a request does not show changed circumstances sufficient to warrant a review, the request will be dismissed and a notice of the dismissal shall be published in the Federal Register stating the reasons therefor.

(3) *Procedures set forth in subpart C of part 207.*— The procedures set forth in sections 207.21 through 207.24 and section 207.28 of this part shall apply to all investigations instituted under this section 207.45.

By order of the Commission.
Issued: August 7, 1980.

KENNETH R. MASON.
Secretary.

In the Matter of CERTAIN COIN-OPERATED AUDIO VISUAL GAMES AND COMPONENTS THEREOF	Investigation No. 337–TA–87

Notice of Prehearing Conference and Hearing

Notice is hereby given that a prehearing conference will be held in this case at 9 a.m. on August 25, 1980, in the Dodge Center, room 201, 1010 Wisconsin Avenue NW., Washington, D.C., and the hearing will commence immediately thereafter.

The Secretary shall publish this notice in the Federal Register.
Issued: August 7, 1980.

JANET D. SAXON,
Administrative Law Judge.

In the matter of CERTAIN AIR-TIGHT CAST-IRON STOVES	Investigation No. 337–TA–69

Notice of Termination

Upon consideration of the presiding officer's recommendation and the record in this proceeding, the Commission is ordering the termination of Investigation No. 337–TA–69, Certain Air-Tight Cast Iron Stoves, with respect to three respondents, Oriental Kingsworld Industrial Co. Ltd., Nelson and Small Inc., and Borneo Sumatra Trading Co.

The order is effective as of August 12, 1980.

Any party wishing to petition for reconsideration of the Commission's action must do so within 14 days of service of the Commission

order. Such petitions must be in accord with Commission rule 210.56 (19 CFR 21056).

Copies of the Commission's action and order, the Commission's opinion and any other public documents in this investigation are available to the public during official working hours (8:45 a.m. to 5:15 p.m.) in the Office of the Secretary, U.S. International Trade Commission, 701 E Street NW., Washington, D.C. 20436, telephone 202-523-0161.

Notice of the institution of this investigation was published in the Federal Register of July 12, 1979 (44 F.R. 40732).

By order of the Commission.

Issued: August 12, 1980.

KENNETH R. MASON,
Secretary.

In the Matter of CERTAIN SPRING ASSEMBLIES AND COMPONENTS THEREOF, AND METHODS FOR THEIR MANUFACTURE	Investigation No. 337-TA-88

Order

Pursuant to my authority as Chief Administrative Law Judge of this Commission, I hereby designate Administrative Law Judge Janet D. Saxon as presiding officer in this investigation.

The Secretary shall serve a copy of this order upon all parties of record and shall publish it in the Federal Register.

Issued: August 14, 1980.

DONALD K. DUVALL,
Chief Administrative Law Judge.

Index

U.S. Customs Service

Treasury decisions:

	T.D. No.
Bonds, carrier	80-213
IIT bonds	80-214
Cotton, wool, and manmade fiber textile products—Restriction on entry—Colombia	80-211
Foreign currencies: Daily certified rates—July 28–August 1, 1980	80-215
Trade name: Florasynth, Inc	80-212

	C.A.D. No.
Decision of the United States Court of Customs and Patent Appeals, *Voss International Corp.*, v. *The United States*	1253

Customs Court

Articles assemblied abroad:
- Integrated circuits, silect transistors, and metal can transistors, C.D. 4867
- United States components, C.D. 4867

Construction; Tariff Schedules of the United States, item 807.00, C.D. 4867
Cross-motions for summary judgment, C.D. 4867
Epoxy compound, item 807.00 allowance, C.D. 4867
Integrated circuits, silect transistors and metal can transistors; articles assembled abroad, C.D. 4867
Metal can transistors, C.D. 4867
Silect transistors, C.D. 4867
Summary judgment, cross-motions for, C.D. 4867
Transistors, C.D. 4867
United States components; articles assembled abroad, C.D. 4867
Valuation decision:
- Construction:
  - Code of Federal Regulations, title 19, sec. 815(d)(1) (1968 ed.) C.D. 4867
  - Customs Simplification Act of 1956, C.D. 4867
  - Tariff Act of 1930, as amended:
    - Sec. 402(d)(1), C.D. 4867
    - Sec. 402(d)(g), C.D. 4867
    - Sec. 402(g), C.D. 4867
  - U.S. Code, title 19:
    - Sec. 1401a(d)(1), C.D. 4867
    - Sec. 1401a(d)(2), C.D. 4867
    - Sec. 1401a(g), C.D. 4867

Valuation decision—Continued
Issues:
Constructed value—costs—The court held that the resourcefulness of the appraising officer in reaching all aspects of cost, inclusive of intercorporate and intra-company profit, with respect to the elements of materials and fabrication as to the imported devices, found support in 19 U.S.C.A. 1401a(d)(1) (sec. 402(d)(1), Tariff Act of 1930, as amended by the Customs Simplification Act of 1956), and must be upheld irrespective of whether such costs originated onshore in the United States or offshore in the country of exportation. *Texas Instruments Incorporated*, C.D. 4867
Constructed value—profit—An addition for profit is not mandated where none was in fact experienced at the level which served as criteria for ascertainment of the element of constructed value—in this case the Geophysical Service Inc., the only producer of this type of merchandise in the Netherlands Antilles, which assembled the imported merchandise in Curacao, and exported same to the United States. (19 U.S.C.A., 1401a(d)(2)) *Texas Instruments Incorporated*, C.D. 4867
Constructed value—related parties—In determining whether or not to disregard a transaction between related parties, an appraising official must be guided by something more than mere suspician generated by the relationship between the parties per se. He must possess factual information indicative that the amount purporting to represent a particular element of value "does not fairly reflect the amount usually reflected in sales in the market under consideration of merchandise of the same general class or kind as the merchandise undergoing appraisement." 19 U.S.C.A., 1401a(g)(1), *Texas Instruments Incorporated*, C.D. 4867
Legislative history: Senate Report No. 2560 on H.R. 6040, 84th Congress 2d session (1956), p. 3, C.D. 4867
Merchandise: Integrated circuits, silect transistors, and metal can transistors, C.D. 4867
Value; constructed, C.D. 4867
Words and phrases:
Epoxy pellets, C.D. 4867
Fabricated components, C.D. 4867

SEP 15 1980
Item 950-D T 1.11/3:14/37
J6 326-864
cop. 378
R
contain

Customs Bulletin

Regulations, Rulings, Decisions, and Notices concerning Customs and related matters

and Decisions

of the United States Court of Customs and Patent Appeals and the United States Customs Court

9247
Ad.

Vol. 14 | SEPTEMBER 10, 1980 | No. 37

This issue contains

T.D. 80–216 through 80–220
General Notice
C.S.D. 80-151 through 80-175
Recent Unpublished Service Decisions

THE DEPARTMENT OF THE TREASURY
U.S. Customs Service

NOTICE

The abstracts, rulings, and notices which are issued weekly by the U.S. Customs Service are subject to correction for typographical or other printing errors. Users may notify the U.S. Customs Service, Logistics Management Division, Washington, D.C. 20229, of any such errors in order that corrections may be made before the bound volumes are published.

For sale by the Superintendent of Documents, U.S. Government Printing Office, Washington, D.C. 20402. Price: $2.25 (single copy domestic); $2.85 (single copy foreign). Subscription price: $85.00 a year domestic; $106.25 a year foreign.

U.S. Customs Service

Treasury Decisions

(T.D. 80-216)

Approval and discontinuance of consolidated aircraft bonds (air carrier blanket bonds), Customs form 7605

The following consolidated aircraft bonds have been approved or discontinued as shown below. The symbol D indicates that the bond previously outstanding has been discontinued on the month, day, and year represented by the figures which follow. PB refers to a previous bond, dated as represented by the figures in parentheses immediately following, which has been discontinued. If the previous bond was in the name of a different company or if the surety was different, the information is shown in a footnote at the end of the list.

Dated: August 20, 1980.

Name of principal and surety	Date term commences	Date of approval	Filed with district director/area director/amount
Eastern Air Lines, Inc., Miami International Airport, Miami, FL; American Casualty Co. of Reading, PA (PB 4/9/79) D 5/10/80 [1]	May 11, 1980	May 11, 1980	New York Seaport; $100,000
Hughes Air Corp., d/b/a Hughes Airwest, San Francisco International Airport, San Francisco, CA; Safeco Ins. Company of America (PB 9/18/72) 9/18/79 [2]	Sept. 18, 1979	Nov. 1, 1979	San Francisco, CA; $100,000

NOTE.—The foregoing principles have been designated as carriers of bonded merchandise.

Name of principal and surety	Date term commences	Date of approval	Filed with district director/area director/amount
JAT-Yugoslav Airlines, 630 Fifth Ave., New York, NY; Old Republic Ins. Co. (PB 10/11/76) D 7/5/80 [3]	July 5, 1980	July 14, 1980	JFK Airport, NY; $100,000

NOTE.—The foregoing principal has not been designated as a carrier of bonded merchandise.

[1] Surety is Firemen's Insurance Co. of Newark, NJ.

[2] Principal is Hughes Air West. Surety is the American Insurance Co.

[3] Surety is Boston Old Colony Ins. Co.

BON-3-01

ALFRED G. SCHOLLE,
Director, Carriers, Drawback and Bonds Division.

(T.D. 80–217)

Instruments of International Traffic

Certain steel wires used for the transportation of razor blade cartridge spacers designated as instruments of international traffic

It has been established to the satisfaction of the U.S. Customs Service that holders, generally referred to as steel spacer wires, composed of a 16-gage U-shaped wire measuring 17¾ inches long at one end and 17⅝ inches long at the other end, with an 11- or 12-gage wire 1¾ inches long spot welded to the U, and with a retainer of metal or rubber closing the other end when loaded, used for the transportation of steel spacers to be incorporated into twin blade razor cartridges, are substantial, suitable for and capable of repeated use, and used in significant numbers in international traffic.

Under the authority of section 10.41a(a)(1), Customs Regulations, I hereby designate the above-described steel wires as instruments of international traffic within the meaning of section 322(a), Tariff Act of 1930, as amended (19 U.S.C. 1322(a)). These holders may be released under the procedures provided for in section 10.41a, Customs Regulations.

(BOR–7–07)

Dated: August 15, 1980.

ALFRED G. SCHOLLE,
Director, Carriers,
Drawback and Bonds Division.

(T.D. 80–218)

(521852)

General Agreement on Tariffs and Trade

Parts 1 to 5 of annex I to Presidential Proclamation 4768 of June 28, 1980

Reprinted below are the documents included in annex I to Presidential Proclamation 4768 of June 28, 1980. Proclamation 4768, to carry out the Agreement on Implementation of Article VII of the General Agreement on Tariffs and Trade (the Customs Valuation Code) and other purposes, was printed on July 2, 1980, in the Federal

Register (45 F.R. 45135). Foreign language texts of the agreements in annex I, i.e., parts 1 and 4, are omitted from the following reproduction.

Dated: August 21, 1980.

JOHN T. ROTH,
Acting Director,
Office of Regulations and Rulings.

ANNEX I

TEXTS OF CERTAIN AGREEMENTS IDENTIFIED IN THE THIRD AND FOURTH RECITAL OF PROCLAMATION 4768 OF JUNE 28, 1980

Part 1.—Agreement on Implementation of Article VII of the General Agreement on Tariffs and Trade (the Customs Valuation Code) Entered Into on April 12, 1979

Part 2.—Trade Agreement with Switzerland Entered Into on December 18 and 21, 1979

Part 3.—Trade Agreements with the European Communities (including the European Economic Community) Entered Into on December 21, 1979, on December 27, 1979, and on January 2, 1980

Part 4.—Trade Agreement with the Dominican Republic Entered Into on January 2, 1980

Part 5.—Trade Agreement with Indonesia Entered Into on December 20 and December 29, 1979

PART 1.—AGREEMENT ON IMPLEMENTATION OF ARTICLE VII OF THE GENERAL AGREEMENT ON TARIFFS AND TRADE (THE CUSTOMS VALUATION CODE) ENTERED INTO ON APRIL 12, 1979

AGREEMENT ON IMPLEMENTATION OF ARTICLE VII OF THE GENERAL AGREEMENT ON TARIFFS AND TRADE

PREAMBLE

Having regard to the Multilateral Trade Negotiations, the Parties to this Agreement (hereinafter referred to as "Parties"),

Desiring to further the objectives of the General Agreement on Tariffs and Trade (hereinafter referred to as "General Agreement" or "GATT") and to secure additional benefits for the international trade of developing countries;

Recognizing the importance of the provisions of Article VII of the General Agreement and desiring to elaborate rules for their application in order to provide greater uniformity and certainty in their implementation;

Recognizing the need for a fair, uniform and neutral system for the valuation of goods for customs purposes that precludes the use of arbitrary or fictitious customs values;

Recognizing that the basis for valuation of goods for customs purposes should, to the greatest extent possible, be the transaction value of the goods being valued;

Recognizing that customs value should be based on simple and equitable criteria consistent with commercial practices and that valuation procedures should be of general application without distinction between sources of supply;

Recognizing that valuation procedures should not be used to combat dumping;

Hereby agree as follows:

PART I

RULES ON CUSTOMS VALUATION

Article 1

1. The customs value of imported goods shall be the transaction value, that is the price actually paid or payable for the goods when sold for export to the country of importation adjusted in accordance with the provisions of Article 8, provided:

(*a*) that there are no restrictions as to the disposition or use of the goods by the buyer other than restrictions which:

(i) are imposed or required by law or by the public authorities in the country of importation;

(ii) limit the geographical area in which the goods may be resold; or

(iii) do not substantially affect the value of the goods;

(*b*) that the sale or price is not subject to some condition or consideration for which a value cannot be determined with respect to the goods being valued;

(*c*) that no part of the proceeds of any subsequent resale, disposal or use of the goods by the buyer will accrue directly or indirectly to the seller, unless an appropriate adjustment can be made in accordance with the provisions of Article 8; and

(*d*) that the buyer and seller are not related, or where the buyer and seller are related, that the transaction value is acceptable for customs purposes under the provisions of paragraph 2 of this Article.

2. (*a*) In determining whether the transaction value is acceptable for the purposes of paragraph 1, the fact that the buyer and the seller are related within the meaning of Article 15 shall not in itself be grounds for regarding the transaction value as unacceptable. In such case the circumstances surrounding the sale shall be examined and the transaction value shall be accepted provided that the relationship did not influence the price. If, in the light of information provided by the importer or otherwise, the customs administration has grounds for considering that the relationship influenced the price, it shall communicate its grounds to the importer and he shall be given a reasonable opportunity to respond. If the importer so requests, the communication of the grounds shall be in writing.

(*b*) In a sale between related persons, the transaction value shall be accepted and the goods valued in accordance with the provisions of paragraph 1 whenever the importer demonstrates that such value closely approximates to one of the following occurring at or about the same time:

(i) the transaction value in sales to unrelated buyers of identical or similar goods for export to the same country of importation;

(ii) the customs value of identical or similar goods as determined under the provisions of Article 5;

(iii) the customs value of identical or similar goods as determined under the provisions of Article 6;

(iv) the transaction value in sales to unrelated buyers for export to the same country of importation of goods which would be identical to the imported goods except for having a different country of production provided that the sellers in any two transactions being compared are not related.

In applying the foregoing tests, due account shall be taken of demonstrated differences in commercial levels, quantity levels, the elements enumerated in Article 8 and costs incurred by the seller in sales in which he and the buyer are not related that are not incurred by the seller in sales in which he and the buyer are related.

(*c*) The tests set forth in paragraph 2(*b*) are to be used at the initiative of the importer and only for comparison purposes. Substitute values may not be established under the provisions of paragraph 2(*b*).

Article 2

1. (*a*) If the customs value of the imported goods cannot be determined under the provisions of Article 1, the customs value shall be the transaction value of identical goods sold for export to the same country of importation and exported at or about the same time as the goods being valued.

(*b*) In applying this Article, the transaction value of identical goods in a sale at the same commercial level and in substantially the same quantity as the goods being valued shall be used to determine the customs value. Where no such sale is found, the transaction value of identical goods sold at a different commercial level and/or in different quantities, adjusted to take account of differences attributable to commercial level and/or to quantity, shall be used, provided that such adjustments can be made on the basis of demonstrated evidence which clearly establishes the reasonableness and accuracy of the adjustment, whether the adjustment leads to an increase or a decrease in the value.

2. Where the costs and charges referred to in Article 8.2 are included in the transaction value, an adjustment shall be made to take account of significant differences in such costs and charges between the imported goods and the identical goods in question arising from differences in distances and modes of transport.

3. If, in applying this Article, more than one transaction value of identical goods is found, the lowest such value shall be used to determine the customs value of the imported goods.

Article 3

1. (*a*) If the customs value of the imported goods cannot be determined under the provisions of Articles 1 and 2, the customs value shall be the transaction value of similar goods sold for export to the same country of importation and exported at or about the same time as the goods being valued.

(*b*) In applying this Article, the transaction value of similar goods in a sale at the same commercial level and in substantially the same

quantity as the goods being valued shall be used to determine the customs value. Where no such sale is found, the transaction value of similar goods sold at a different commercial level and/or in different quantities, adjusted to take account of differences attributable to commercial level and/or to quantity, shall be used, provided that such adjustments can be made on the basis of demonstrated evidence which clearly establishes the reasonableness and accuracy of the adjustment, whether the adjustment leads to an increase or a decrease in the value.

2. Where the costs and charges referred to in Article 8.2 are included in the transaction value, an adjustment shall be made to take account of significant differences in such costs and charges between the imported goods and the similar goods in question arising from differences in distances and modes of transport.

3. If, in applying this Article, more than one transaction value of similar goods is found, the lowest such value shall be used to determine the customs value of the imported goods.

Article 4

If the customs value of the imported goods cannot be determined under the provisions of Articles 1, 2 and 3 the customs value shall be determined under the provisions of Article 5 or, when the customs value cannot be determined under that Article, under the provisions of Article 6 except that, at the request of the importer, the order of application of Articles 5 and 6 shall be reversed.

Article 5

1. (*a*) If the imported goods or identical or similar imported goods are sold in the country of importation in the condition as imported, the customs value of the imported goods under the provisions of this Article shall be based on the unit price at which the imported goods or identical or similar imported goods are so sold in the greatest aggregate quantity, at or about the time of the importation of the goods being valued, to persons who are not related to the persons from whom they buy such goods, subject to deductions for the following:

(i) either the commissions usually paid or agreed to be paid or the additions usually made for profit and general expenses in connexion with sales in such country of imported goods of the same class or kind;

(ii) the usual costs of transport and insurance and associated costs incurred within the country of importation;

(iii) where appropriate, the costs and charges referred to in Article 8.2; and

326-864 O - 2

(iv) the customs duties and other national taxes payable in the country of importation by reason of the importation or sale of the goods.

(*b*) If neither the imported goods nor identical nor similar imported goods are sold at or about the time of importation of the goods being valued, the customs value shall, subject otherwise to the provisions of paragraph 1(*a*) of this Article, be based on the unit price at which the imported goods or identical or similar imported goods are sold in the country of importation in the condition as imported at the earliest date after the importation of the goods being valued but before the expiration of ninety days after such importation.

2. If neither the imported goods nor identical nor similar imported goods are sold in the country of importation in the condition as imported, then, if the importer so requests, the customs value shall be based on the unit price at which the imported goods, after further processing, are sold in the greatest aggregate quantity to persons in the country of importation who are not related to the persons from whom they buy such goods, due allowance being made for the value added by such processing and the deductions provided for in paragraph 1(*a*) of this Article.

Article 6

1. The customs value of imported goods under the provisions of this Article shall be based on a computed value. Computed value shall consist of the sum of:

(*a*) the cost or value of materials and fabrication or other processing employed in producing the imported goods;

(*b*) an amount for profit and general expenses equal to that usually reflected in sales of goods of the same class or kind as the goods being valued which are made by producers in the country of exportation for export to the country of importation;

(*c*) the cost or value of all other expenses necessary to reflect the valuation option chosen by the Party under Article 8.2.

2. No Party may require or compel any person not resident in its own territory to produce for examination, or to allow access to, any account or other record for the purposes of determining a computed value. However, information supplied by the producer of the goods for the purposes of determining the customs value under the provisions of this Article may be verified in another country by the authorities of the country of importation with the agreement of the producer and provided they give sufficient advance notice to the government of the country in question and the latter does not object to the investigation.

Article 7

1. If the customs value of the imported goods cannot be determined under the provisions of Articles 1 to 6, inclusive, the customs value shall be determined using reasonable means consistent with the principles and general provisions of this Agreement and of Article VII of the General Agreement and on the basis of data available in the country of importation.

2. No customs value shall be determined under the provisions of this Article on the basis of:

(*a*) the selling price in the country of importation of goods produced in such country;

(*b*) a system which provides for the acceptance for customs purposes of the higher of two alternative values;

(*c*) the price of goods on the domestic market of the country of exportation;

(*d*) the cost of production other than computed values which have been determined for identical or similar goods in accordance with the provisions of Article 6;

(*e*) the price of the goods for export to a country other than the country of importation;

(*f*) minimum customs values; or

(*g*) arbitrary or fictitious values.

3. If he so requests, the importer shall be informed in writing of the customs value determined under the provisions of this Article and the method used to determine such value.

Article 8

1. In determining the customs value under the provisions of Article 1, there shall be added to the price actually paid or payable for the imported goods:

(*a*) the following, to the extent that they are incurred by the buyer but are not included in the price actually paid or payable for the goods:

(i) commissions and brokerage, except buying commissions;

(ii) the cost of containers which are treated as being one for customs purposes with the goods in question;

(iii) the cost of packing whether for labor or materials;

(*b*) the value, apportioned as appropriate, of the following goods and services where supplied directly or indirectly by the buyer free of charge or at reduced cost for use in connexion with the production and sale for export of the imported goods, to the extent that such value has not been included in the price actually paid or payable:

(i) materials, components, parts and similar items incorporated in the imported goods;

(ii) tools, dies, moulds and similar items used in the production of the imported goods;

(iii) materials consumed in the production of the imported goods;

(iv) engineering, development, artwork, design work, and plans and sketches undertaken elsewhere than in the country of importation and necessary for the production of the imported goods;

(*c*) royalties and licence fees related to the goods being valued that the buyer must pay, either directly or indirectly, as a condition of sales of the goods being valued, to the extent that such royalties and fees are not included in the price actually paid or payable;

(*d*) The value of any part of the proceeds of any subsequent resale, disposal or use of the imported goods that accrues directly or indirectly to the seller.

2. In framing its legislation, each Party shall provide for the inclusion in or the exclusion from the customs value, in whole or in part, of the following:

(*a*) the cost of transport of the imported goods to the port or place of importation;

(*b*) loading, unloading and handling charges associated with the transport of the imported goods to the port or place of importation; and

(*c*) the cost of insurance.

3. Additions to the price actually paid or payable shall be made under this Article only on the basis of objective and quantifiable data.

4. No additions shall be made to the price actually paid or payable in determining the customs value except as provided in this Article.

Article 9

1. Where the conversion of currency is necessary for the determination of the customs value, the rate of exchange to be used shall be that duly published by the competent authorities of the country of importation concerned and shall reflect as effectively as possible, in respect of the period covered by each such document of publication, the current value of such currency in commercial transactions in terms of the currency of the country of importation.

2. The conversion rate to be used shall be that in effect at the time of exportation or the time of importation, as provided by each Party.

Article 10

All information which is by nature confidential or which is provided on a confidential basis for the purposes of customs valuation shall be treated as strictly confidential by the authorities concerned who shall not disclose it without the specific permission of the person or government providing such information, except to the extent that it may be required to be disclosed in the context of judicial proceedings.

Article 11

1. The legislation of each Party shall provide in regard to a determination of customs value for the right of appeal, without penalty, by the importer or any other person liable for the payment of the duty.

2. An initial right of appeal without penalty may be to an authority within the customs administration or to an independent body, but the legislation of each Party shall provide for the right of appeal without penalty to a judicial authority.

3. Notice of the decision on appeal shall be given to the appellant and the reasons for such decision shall be provided in writing. He shall also be informed of his rights of any further appeal.

Article 12

Laws, regulations, judicial decisions and administrative rulings of general application giving effect to this Agreement shall be published in conformity with Article X of the General Agreement by the country of importation concerned.

Article 13

If, in the course of determining the customs value of imported goods, it becomes necessary to delay the final determination of such customs value, the importer shall nevertheless be able to withdraw his goods from customs if, where so required, he provides sufficient guarantee in the form of a surety, a deposit or some other appropriate instrument, covering the ultimate payment of customs duties for which the goods may be liable. The legislation of each Party shall make provisions for such circumstances.

Article 14

The notes at Annex I to this Agreement form an integral part of this Agreement and the Articles of this Agreement are to be read and applied in conjunction with their respective notes. Annexes II and III also form an integral part of this Agreement.

Article 15

1. In this Agreement:

(*a*) "customs value of imported goods" means the value of goods for the purposes of levying ad valorem duties of customs on imported goods;

(*b*) "country of importation" means country or customs territory of importation; and

(*c*) "produced" includes grown, manufactured and mined.

2. (*a*) In this Agreement "identical goods" means goods which are the same in all respects, including physical characteristics, quality and reputation. Minor differences in appearance would not preclude goods otherwise conforming to the definition from being regarded as identical.

(*b*) In this Agreement "similar goods" means goods which, although not alike in all respects, have like characteristics and like component materials which enable them to perform the same functions and to be commercially interchangeable. The quality of the goods, their reputation and the existence of a trademark are among the factors to be considered in determining whether goods are similar.

(*c*) The terms "identical goods" and "similar goods" do not include, as the case may be, goods which incorporate or reflect engineering, development, artwork, design work, and plans and sketches for which no adjustment has been made under Article 8.1(*b*)(iv) because such elements were undertaken in the country of importation.

(*d*) Goods shall not be regarded as "identical goods" or "similar goods" unless they were produced in the same country as the goods being valued.

(*e*) Goods produced by a different person shall be taken into account only when there are no identical goods or similar goods, as the case may be, produced by the same person as the goods being valued.

3. In this Agreement "goods of the same class or kind" means goods which fall within a group or range of goods produced by a particular industry or industry sector, and includes identical or similar goods.

4. For the purposes of this Agreement, persons shall be deemed to be related only if:

(*a*) they are officers or directors of one another's businesses;

(*b*) they are legally recognized partners in business;

(*c*) they are employer and employee;

(*d*) any person directly or indirectly owns, controls or holds 5 percent or more of the outstanding voting stock or shares of both of them;

(*e*) one of them directly or indirectly controls the other;

(*f*) both of them are directly or indirectly controlled by a third person;

(*g*) together they directly or indirectly control a third person; or

(*h*) they are members of the same family.

5. Persons who are associated in business with one another in that one is the sole agent, sole distributor or sole concessionaire, however described, of the other shall be deemed to be related for the purposes of this Agreement if they fall within the criteria of paragraph 4 of this Article.

Article 16

Upon written request, the importer shall have the right to an explanation in writing from the customs administration of the country of importation as to how the customs value of his imported goods was determined.

Article 17

Nothing in this Agreement shall be construed as restricting or calling into question the rights of customs administrations to satisfy themselves as to the truth or accuracy of any statement, document or declaration presented for customs valuation purposes.

Part II

ADMINISTRATION, CONSULTATION AND DISPUTE SETTLEMENT

Institutions

Article 18

There shall be established under this Agreement:

1. A Committee on Customs Valuation (hereinafter referred to as the Committee) composed of representatives from each of the Parties. The Committee shall elect its own Chairman and shall normally meet once a year, or as is otherwise envisaged by the relevant provisions of this Agreement, for the purpose of affording Parties the opportunity to consult on matters relating to the administration of the customs valuation system by any Party as it might affect the operation of this Agreement or the furtherance of its objectives and carrying out such other responsibilities as may be assigned to it by the Parties. The GATT secretariat shall act as the secretariat to the Committee.

2. A Technical Committee on Customs Valuation (hereinafter referred to as the Technical Committee) under the auspices of the Customs Cooperation Council, which shall carry out the responsibilities described in Annex II to this Agreement and shall operate in accordance with the rules of procedure contained therein.

Consultation

Article 19

1. If any Party considers that any benefit accruing to it, directly or indirectly, under this Agreement is being nullified or impaired, or that the achievement of any objective of this Agreement is being impeded, as a result of the actions of another Party or of other Parties, it may, with a view to reaching a mutually satisfactory solution of the matter, request consultations with the Party or Parties in question. Each Party shall afford reaching a mutually satisfactory solution of the matter, request consultations with the Party or Parties in question. Each Party shall afford sympathetic consideration to any request from another Party for consultations.

2. The Parties concerned shall initiate requested consultations promptly.

3. Parties engaged in consultations on a particular matter affecting the operation of this Agreement shall attempt to conclude such consultations within a reasonably short period of time. The Technical Committee shall provide, upon request, advice and assistance to Parties engaged in consultations.

Dispute settlement

Article 20

1. If no mutually satisfactory solution has been reached between the Parties concerned in consultations under Article 19 above, the Committee shall meet at the request of any party to the dispute, within thirty days of receipt of such a request, to investigate the matter, with a view to facilitating a mutually satisfactory solution.

2. In investigating the matter and in selecting its procedures, the Committee shall take into account whether the issues in dispute relate to commercial policy considerations or to questions requiring detailed technical consideration. The Committee may request on its own initiative that the Technical Committee carry out an examination, as provided in paragraph 4 below, of any question requiring technical consideration. Upon the request of any party to the dispute that considers the issues to relate to questions of a technical nature, the Committee shall request the Technical Committee to carry out such an examination.

3. During any phase of a dispute settlement procedure, competent bodies and experts in matters under consideration may be consulted; appropriate information and assistance may be requested from such bodies and experts. The Committee shall take into consideration the

results of any work of the Technical Committee that pertain to the matter in dispute.

Technical issues

4. When the Technical Committee is requested under the provisions of paragraph 2 above, it shall examine the matter and report to the Committee no later than three months from the date the technical issue was referred to it, unless the period is extended by mutual agreement between the parties to the dispute.

Panel proceedings

5. In cases where the matter is not referred to the Technical Committee, the Committee shall establish a panel upon the request of any party to the dispute if no mutually satisfactory solution has been reached within three months from the date of the request to the Committee to investigate the matter. Where the matter is referred to the Technical Committee, the Committee shall establish a panel upon the request of any party to the dispute if no mutually satisfactory solution has been reached within one month from the date when the Technical Committee presents its report to the Committee.

6. (*a*) When a panel is established, it shall be governed by the procedures as set forth in Annex III.

(*b*) If the Technical Committee has made a report on the technical aspects of the matter in dispute, the panel shall use this report as the basis for its consideration of the technical aspects of the matter in dispute.

Enforcement

7. After the investigation is completed or after the report of the Technical Committee or panel is presented to the Committee, the Committee shall give the matter prompt consideration. With respect to panel reports, the Committee shall take appropriate action normally within thirty days of receipt of the report. Su ch action shall include:

(i) a statement concerning the facts of the matter; and

(ii) recommendations to one or more Parties or any other ruling which it deems appropriate.

8. If a Party to which recommendations are addressed considers itself unable to implement them, it should promptly furnish reasons in writing to the Committee. In that event, the Committee shall consider what further action may be appropriate.

9. If the Committee considers that the circumstances are serious enough to justify such action, it may authorize one or more Parties to suspend the application to any other Party or Parties of such obliga-

326-864 O - 3

tions under this Agreement as it determines to be appropriate in the circumstances.

10. The Committee shall keep under surveillance any matter on which it has made recommendations or given rulings.

11. If a dispute arises between Parties relating to rights and obligations under this Agreement, Parties should complete the dispute settlement procedures under this Agreement before availing themselves of any rights which they have under the GATT, including invoking Article XXIII thereof.

PART III

SPECIAL AND DIFFERENTIAL TREATMENT

Article 21

1. Developing country Parties may delay application of its provisions for a period not exceeding five years from the date of entry into force of this Agreement for such countries. Developing country Parties who choose to delay application of this Agreement shall notify the Director-General to the Contracting Parties to the GATT accordingly.

2. In addition to paragraph 1 above, developing country Parties may delay application of Article 1.2(*b*)(iii) and Article 6 for a period not exceeding three years following their application of all other provisions of this Agreement. Developing country Parties that choose to delay application of the provisions specified in this paragraph shall notify the Director-General to the Contracting Parties to the GATT accordingly.

3. Developed country Parties shall furnish, on mutually agreed terms, technical assistance to developing country Parties that so request. On this basis developed country Parties shall draw up programmes of technical assistance which may include, *inter alia*, training of personnel, assistance in preparing implementation measures, access to sources of information regarding customs valuation methodology, and advice on the application of the provisions of this Agreement.

PART IV

FINAL PROVISIONS

Acceptance and accession

Article 22

1. This Agreement shall be open for acceptance by signature or otherwise by governments contracting parties to the GATT and by the European Economic Community.

2. This Agreement shall be open for acceptance by signature or otherwise by governments having provisionally acceded to the GATT,

on terms related to the effective application of rights and obligations under this Agreement, which take into account rights and obligations in the instruments providing for their provisional accession.

3. This Agreement shall be open to accession by any other government on terms, related to the effective application of rights and obligations under this Agreement, to be agreed between that government and the Parties by the deposit with the Director-General to the Contracting Parties to the GATT of an instrument of accession which states the terms so agreed.

4. In regard to acceptance, the provisions of Article XXVI:5 (*a*) and (*b*) of the General Agreement would be applicable.

Reservations

Article 23

Reservations may not be entered in respect of any of the provisions of this Agreement without the consent of the other Parties.

Entry into force

Article 24

This Agreement shall enter into force on 1 January 1981 for the governments [1] which have accepted or acceded to it by that date. For each other government it shall enter into force on the thirtieth day following the date of its acceptance or accession to this Agreement.

National legislation

Article 25

1. Each government accepting or acceding to this Agreement shall ensure, not later than the date of entry into force of this Agreement for it, the conformity of its laws, regulations and administrative procedures with the provisions of this Agreement.

2. Each Party shall inform the Committee of any changes in its laws and regulations relevant to this Agreement and in the administration of such laws and regulations.

Review

Article 26

The Committee shall review annually the implementation and operation of this Agreement taking into account the objectives

[1] The term "governments" is deemed to include the competent authorities of the European Economic Community.

thereof. The Committee shall annually inform the Contracting Parties to the GATT of developments during the period covered by such reviews.

Amendments

Article 27

The Parties may amend this Agreement, having regard, *inter alia*, to the experience gained in its implementation. Such an amendment, once the Parties have concurred in accordance with procedures established by the Committee, shall not come into force for any Party until it has been accepted by such Party.

Withdrawal

Article 28

Any Party may withdraw from this Agreement. The withdrawal shall take effect upon the expiration of sixty days from the date on which written notice of withdrawal is received by the Director-General to the Contracting Parties to the GATT. Any Party may, upon the receipt of such notice, request an immediate meeting of the Committee.

Secretariat

Article 29

This Agreement shall be serviced by the GATT secretariat except in regard to those responsibilities specifically assigned to the Technical Committee, which will be serviced by the secretariat of the Customs Co-operation Council.

Deposit

Article 30

This Agreement shall be deposited with the Director-General to the Contracting Parties to the GATT, who shall promptly furnish to each Party and each contracting party to the GATT a certified copy thereof and of each amendment thereto pursuant to Article 27, and a notification of each acceptance thereof or accession thereto pursuant to Article 22 and of each withdrawal therefrom pursuant to Article 28.

Registration

Article 31

This Agreement shall be registerel in accordance with the provisions of Article 102 of the Charter of the United Nations.

Done at Geneva this twelfth day of April nineteen hundred and seventy-nine in a single copy, in the English, French and Spanish languages, each text being authentic.

ANNEX I

INTERPRETATIVE NOTES

General Note

Sequential application of valuation methods

1. Articles 1 to 7, inclusive, define how the customs value of imported goods is to be determined under the provisions of this Agreement. The methods of valuation are set out in a sequential order of application. The primary method for customs valuation is defined in Article 1 and imported goods are to be valued in accordance with the provisions of this Article whenever the conditions prescribed therein are fulfilled.

2. Where the customs value cannot be determined under the provisions of Article 1, it is to be determined by proceeding sequentially through the succeeding Articles to the first such Article under which the customs value can be determined. Except as provided in Article 4, it is only when the customs value cannot be determined under the provisions of a particular Article that the provisions of the next Article in the sequence can be used.

3. If the importer does not request that the order of Articles 5 and 6 be reversed, the normal order of the sequence is to be followed. If the importer does so request but it then proves impossible to determine the customs value under the provisions of Article 6, the customs value is to be determined under the provisions of Article 5, if it can be so determined.

4. Where the customs value cannot be determined under the provisions of Articles 1 to 6, inclusive, it is to be determined under the provisions of Article 7.

Use of generally accepted accounting principles

1. "Generally accepted accounting principles" refers to the recognized consensus or substantial authoritative support within a country at a particular time as to which economic resources and obligations should be recorded as assets and liabilities, which changes in assets and liabilities should be recorded, how the assets and liabilities and changes in them should be measured, what information should be disclosed and how it should be disclosed, and which financial statements should be prepared. These standards may be broad guidelines of general application as well as detailed practices and procedures.

2. For the purposes of this Agreement, the customs administration of each party shall utilize information prepared in a manner consistent with generally accepted accounting principles in the country which is appropriate for the Article in question. For example, the determination

of usual profit and general expenses under the provisions of Article 5 would be carried out utilizing information prepared in a manner consistent with generally accepted accounting principles of the country of importation. On the other hand, the determination of usual profit and general expenses under the provisions of Article 6 would be carried out utilizing information prepared in a manner consistent with generally accepted accounting principles of the country of production. As a further example, the determination of an element provided for in Article 8.1(*b*)(ii) undertaken in the country of importation would be carried out utilizing information in a manner consistent with the generally accepted accounting principles of that country.

Note to Article 1

Price actually paid or payable

The price actually paid or payable is the total payment made or to be made by the buyer to or for the benefit of the seller for the imported goods. The payment need not necessarily take the form of a transfer of money. Payment may be made by way of letters of credit or negotiable instruments. Payment may be made directly or indirectly. An example of an indirect payment would be the settlement by the buyer, whether in whole or in part, of a debt owed by the seller.

Activities undertaken by the buyer on his own account, other than those for which an adjustment is provided in Article 8, are not considered to be an indirect payment to the seller, even though they might be regarded as of benefit to the seller. The costs of such activities shall not, therefore, be added to the price actually paid or payable in determining the cutoms value.

The customs value shall not include the following charges or costs, provided that they are distinguished from the price actually paid or payable for the imported goods:

(*a*) charges for construction, erection, assembly, maintenance or technical assistance, undertaken after importation on imported goods such as industrial plant, machinery or equipment;

(*b*) the cost of transport after importation;

(*c*) duties and taxes of the country of importation.

The price actually paid or payable refers to the price for the imported goods. Thus the flow of dividends or other payments from the buyer to the seller that do not relate to the imported goods are not part of the customs value.

Paragraph 1(a)(iii)

Among restrictions which would not render a price actually paid or payable unacceptable are restrictions which do not substantially

affect the value of the goods. An example of such restrictions would be the case where a seller requires a buyer of automobiles not to sell or exhibit them prior to a fixed date which represents the beginning of a model year.

Paragraph 1(b)

If the sale or price is subject to some condition or consideration for which a value cannot be determined with respect to the goods being valued, the transaction value shall not be acceptable for customs purposes. Some examples of this include:

(*a*) the seller establishes the price of the imported goods on condition that the buyer will also buy other goods in specified quantities;

(*b*) the price of the imported goods is dependent upon the price or prices at which the buyer of the imported goods sells other goods to the seller of the imported goods;

(*c*) the price is established on the basis of a form of payment extraneous to the imported goods, such as where the imported goods are semi-finished goods which have been provided by the seller on condition that he will receive a specified quantity of the finished goods.

However, conditions or considerations relating to the production or marketing of the imported goods shall not result in rejection of the transaction value. For example, the fact that the buyer furnishes the seller with engineering and plans undertaken in the country of importation shall not result in rejection of the transaction value for the purposes of Article 1. Likewise, if the buyer undertakes on his own account, even though by agreement with the seller, activities relating to the marketing of the imported goods, the value of these activities is not part of the customs value nor shall such activities result in rejection of the transaction value.

Paragraph 2

1. Paragraphs 2(*a*) and 2(*b*) provide different means of establishing the acceptability of a transaction value.

2. Paragraph 2(*a*) provides that where the buyer and the seller are related, the circumstances surrounding the sale shall be examined and the transaction value shall be accepted as the customs value provided that the relationship did not influence the price. It is not intended that there should be an examination of the circumstances in all cases where the buyer and the seller are related. Such examination will only be required where there are doubts about the acceptability of the price. Where the customs administration have no doubts about the acceptability of the price, it should be accepted without requesting further information from the importer. For example, the customs administra-

tion may have previously examined the relationship, or it may already have detailed information concerning the buyer and the seller, and may already be satisfied from such examination or information that the relationship did not influence the price.

3. Where the customs administration is unable to accept the transaction value without further inquiry, it should give the importer an opportunity to supply such further detailed information as may be necessary to enable it to examine the circumstances surrounding the sale. In this context, the customs administration should be prepared to examine relevant aspects of the transaction, including the way in which the buyer and seller organize their commercial relations and the way in which the price in question was arrived at, in order to determine whether the relationship influenced the price. Where it can be shown that the buyer and seller, although related under the provisions of Article 15, buy from and sell to each other as if they were not related, this would demonstrate that the price had not been influenced by the relationship. As an example of this, if the price had been settled in a manner consistent with the normal pricing practices of the industry in question or with the way the seller settles prices for sales to buyers who are not related to him, this would demonstrate that the price had not been influenced by the relationship. As a further example, where it is shown that the price is adequate to ensure recovery of all costs plus a profit which is representative of the firm's overall profit realized over a representative period of time (e.g. on an annual basis) in sales of goods of the same class or kind, this would demonstrate that the price had not been influenced.

4. Paragraph 2(*b*) provides an opportunity for the importer to demonstrate that the transaction value closely approximates to a "test" value previously accepted by the customs administration and is therefore acceptable under the provisions of Article 1. Where a test under paragraph 2(*b*) is met, it is not necessary to examine the question of influence under paragraph 2(*a*). If the customs administration has already sufficient information to be satisfied, without further detailed inquiries, that one of the tests provided in paragraph 2(*b*) has been met, there is no reason for it to require the importer to demonstrate that the test can be met. In paragraph 2(*b*) the term "unrelated buyers" means buyers who are not related to the seller in any particular case.

Paragraph 2(b)

A number of factors must be taken into consideration in determining whether one value "closely approximates" to another value. These factors include the nature of the imported goods, the

nature of the industry itself, the season in which the goods are imported, and, whether the difference in values is commercially significant. Since these factors may vary from case to case, it would be impossible to apply a uniform standard such as a fixed percentage, in each case. For example, a small difference in value in a case involving one type of goods could be unacceptable while a large difference in a case involving another type of goods might be acceptable in determining whether the transaction value closely approximates to the "test" values set forth in Article 1.2(*b*).

Note to Article 2

1. In applying Article 2, the customs administration shall, wherever possible, use a sale of identical goods at the same commercial level and in substantially the same quantities as the goods being valued. Where no such sale is found, a sale of identical goods that takes place under any one of the following three conditions may be used:

(*a*) a sale at the same commercial level but in different quantities;

(*b*) a sale at a different commercial level but in substantially the same quantities; or

(*c*) a sale at a different commercial level and in different quantities.

2. Having found a sale under any one of these three conditions adjustments will then be made, as the case may be, for:

(*a*) quantity factors only;

(*b*) commercial level factors only; or

(*c*) both commercial level and quantity factors.

3. The expression "and/or" allows the flexibility to use the sales and make the necessary adjustments in any one of the three conditions described above.

4. For the purposes of Article 2, the transaction value of identical imported goods means a customs value, adjusted as provided for in paragraphs 1(*b*) and 2 of this Article, which has already been accepted under Article 1.

5. A condition for adjustment because of different commercial levels or different quantities is that such adjustment, whether it leads to an increase or a decrease in the value, be made only on the basis of demonstrated evidence that clearly establishes the reasonableness and accuracy of the adjustments, e.g. valid price lists containing prices referring to different levels or different quantities. As an example of this, if the imported goods being valued consist of a shipment of 10 units and the only identical imported goods for which a transaction value exists involved a sale of 500 units, and it is recognized that the seller grants quantity discounts, the required adjustment may be accomplished by resorting to the seller's price list and using that price

326-864 O - 4

applicable to a sale of 10 units. This does not require that a sale had to have been made in quantities of 10 as long as the price list has been established as being *bona fide* through sales at other quantities. In the absence of such an objective measure, however, the determination of a customs value under the provisions of Article 2 is not appropriate.

Note to Article 3

1. In applying Article 3, the customs administration shall, wherever possible, use a sale of similar goods at the same commercial level and in substantially the same quantities as the goods being valued. Where no such sale is found, a sale of similar goods that takes place under any one of the following three conditions may be used:

(*a*) a sale at the same commercial level but in different quantities;

(*b*) a sale at a different commercial level but in substantially the same quantities; or

(*c*) a sale at a different commercial level and in different quantities.

2. Having found a sale under any one of these three conditions adjustments will then be made, as the case may be, for:

(*a*) quantity factors only;

(*b*) commercial level factors only; or

(*c*) both commercial level and quantity factors.

3. The expression "and/or" allows the flexibility to use the sales and make the necessary adjustments in any one of the three conditions described above.

4. For the purpose of Article 3, the transaction value of similar imported goods means a customs value, adjusted as provided for in paragraphs 1(*b*) and 2 of this Article, which has already been accepted under Article 1.

5. A condition for adjustment because of different commercial levels or different quantities is that such adjustment, whether it leads to an increase or a decrease in the value, be made only on the basis of demonstrated evidence that clearly establishes the reasonableness and accuracy of the adjustment, e.g. valid price lists containing prices referring to different levels or different quantities. As an example of this, if the imported goods being valued consist of a shipment of 10 units and the only similar imported goods for which a transaction value exists involved a sale of 500 units, and it is recognized that the seller grants quantity discounts, the required adjustment may be accomplished by resorting to the sellers' price list and using that price applicable to a sale of 10 units. This does not require that a sale had to have been made in quantities of 10 as long as the price list has been established as being *bona fide* through sales at other quantities. In the

absence of such an objective measure, however, the determination of a customs value under the provisions of Article 3 is not appropriate.

Note to Article 5

1. The term "unit price at which ---- goods are sold in the greatest aggregate quantity" means the price at which the greatest number of units is sold in sales to persons who are not related to the persons from whom they buy such goods at the first commercial level after importation at which such sales take place.

2. As an example of this, goods are sold from a price list which grants favourable unit prices for purchases made in larger quantities.

Sale quantity	Unit price	Number of sales	Total quantity sold at each price
1 to 10 units	100	10 sales of 5 units	65
		5 sales of 3 units	
11 to 25 units	95	5 sales of 11 units	55
Over 25 units	90	1 sale of 30 units	80
		1 sale of 50 units	

The greatest number of units sold at a price is 80; therefore, the unit price in the greatest aggregate quantity is 90.

3. As another example of this, two sales occur. In the first sale 500 units are sold at a price of 95 currency units each. In the second sale 400 units are sold at a price of 90 currency units each. In this example, the greatest number of units sold at a particular price is 500; therefore, the unit price in the greatest aggregate quantity is 95.

4. A third example would be the following situation where various quantities are sold at various prices.

(*a*) *Sales*

Sale quantity:	*Unit price*
40 units	100
30 units	90
15 units	100
50 units	95
25 units	105
35 units	90
5 units	100

(*b*) *Totals*

Total quantity sold:	*Unit price*
65	90
50	95
60	100
25	105

In this example, the greatest number of units sold at a particular price is 65; therefore, the unit price in the greatest aggregate quantity is 90.

5. Any sale in the importing country, as described in paragraph 1 above, to a person who supplies directly or indirectly free of charge or at reduced cost for use in connection with the production and sale for export of the imported goods any of the elements specified in Article 8.1(*b*), should not be taken into account in establishing the unit price for the purposes of Article 5.

6. It should be noted that "profit and general expenses" referred to in Article 5.1 should be taken as a whole. The figure for the purposes of this deduction should be determined on the basis of information supplied by or on behalf of the importer unless his figures are inconsistent with those obtaining in sales in the country of importation of imported goods of the same class or kind. Where the importer's figures are inconsistent with such figures, the amount for profit and general expenses may be based upon relevant information other than that supplied by or on behalf of the importer.

7. The "general expenses" include the direct and indirect costs of marketing the goods in question.

8. Local taxes payable by reason of the sale of the goods for which a deduction is not made under the provisions of Article 5.1(*a*)(*iv*) shall be deducted under the provisions of Article 5.1(*a*)(*i*).

9. In determining either the commissions or the usual profits and general expenses under the provisions of Article 5.1, the question whether certain goods are "of the same class or kind" as other goods must be determined on a case-by-case basis by reference to the circumstances involved. Sales in the country of importation of the narrowest group or range of imported goods of the same class or kind, which includes the goods being valued, for which the necessary information can be provided, should be examined. For the purposes of Article 5, "goods of the same class or kind" includes goods imported from the same country as the goods being valued as well as goods imported from other countries.

10. For the purposes of Article 5.1(*b*), the "earliest date" shall be the date by which sales of the imported goods or of identical or similar imported goods are made in sufficient quantity to establish the unit price.

11. Where the method in Article 5.2 is used, deductions made for the value added by further processing shall be based on objective and quantifiable data relating to the cost of such work. Accepted industry formulas, recipes, methods of construction, and other industry practices would form the basis of the calculations.

12. It is recognized that the method of valuation provided for in Article 5.2 would normally not be applicable when, as a result of the further processing, the imported goods lose their identity. However, there can be instances where, although the identity of the imported goods is lost, the value added by the processing can be determined accurately without unreasonable difficulty. On the other hand, there can also be instances where the imported goods maintain their identity but form such a minor element in the goods sold in the country of importation that the use of this valuation method would be unjustified. In view of the above, each situation of this type must be considered on a case-by-case basis.

Note to Article 6

1. As a general rule, customs value is determined under this Agreement on the basis of information readily available in the country of importation. In order to determine a computed value, however, it may be necessary to examine the costs of producing the goods being valued and other information which has to be obtained from outside the country of importation. Furthermore, in most cases the producer of the goods will be outside the jurisdiction of the authorities of the country of importation. The use of the computed value method will generally be limited to those cases where the buyer and seller are related, and the producer is prepared to supply to the authorities of the country of importation the necessary costings and to provide facilities for any subsequent verification which may be necessary.

2. The "cost or value" referred to in Article 6.1(*a*) is to be determined on the basis of information relating to the production of the goods being valued supplied by or on behalf of the producer. It is to be based upon the commercial accounts of the producer, provided that such accounts are consistent with the generally accepted accounting principles applied in the country where the goods are produced.

3. The "cost or value" shall include the cost of elements specified in Article 8.1(*a*) (ii) and (iii). It shall also include the value, apportioned as appropriate under the provisions of the relevant note to Article 8, of any element specified in Article 8.1(*b*) which has been supplied directly or indirectly by the buyer for use in connexion with the production of the imported goods. The value of the elements specified in Article 8.1(*b*)(iv) which are undertaken in the country of importation shall be included only to the extent that such elements are charged to the producer. It is to be understood that no cost or value of the elements referred to in this paragraph shall be counted twice in determining the computed value.

4. The "amount for profit and general expenses" referred to in Article 6.1(*b*) is to be determined on the basis of information supplied by or

on behalf of the producer unless his figures are inconsistent with those usually reflected in sales of goods of the same class or kind as the goods being valued which are made by producers in the country of exportation for export to the country of importation.

5. It should be noted in this context that the "amount for profit and general expenses" has to be taken as a whole. It follows that if, in any particular case, the producer's profit figure is low and his general expenses are high, his profit and general expenses taken together may nevertheless be consistent with that usually reflected in sales of goods of the same class or kind. Such a situation might occur, for example, if a product were being launched in the country of importation and the producer accepted a nil or low profit to offset high general expenses associated with the launch. Where the producer can demonstrate that he is taking a low profit on his sales of the imported goods because of particular commercial circumstances, his actual profit figures should be taken into account provided that he has valid commercial reasons to justify them and his pricing policy reflects usual pricing policies in the branch of industry concerned. Such a situation might occur, for example, where producers have been forced to lower prices temporarily because of an unforseeable drop in demand, or where they sell goods to complement a range of goods being produced in the country of importation and accept a low profit to maintain competitivity. Where the producer's own figures for profit and general expenses are not consistent with those usually reflected in sales of goods of the same class or kind as the goods being valued which are made by producers in the country of exportation for export to the country of importation, the amount for profit and general expenses may be based upon relevant information other than that supplied by or on behalf of the producer of the goods.

6. Where information other than that supplied by or on behalf of the producer is used for the purposes of determining a computed value, the authorities of the importing country shall inform the importer, if the latter so requests, of the source of such information, the data used and the calculations based upon such data, subject to the provisions of Article 10.

7. The "general expenses" referred to in Article 6.1(*b*) covers the direct and indirect costs of producing and selling the goods for export which are not included under Article 6.1(*a*).

8. Whether certain goods are "of the same class or kind" as other goods must be determined on a case-by-case basis with reference to the circumstances involved. In determining the usual profits and general expenses under the provisions of Article 6, sales for export to the country of importation of the narrowest group or range of goods, which includes the goods being valued, for which the neces-

sary information can be provided, should be examined. For the purposes of Article 6, "goods of the same class or kind" must be from the same country as the goods being valued.

Note to Article 7

1. Customs values determined under the provisions of Article 7 should, to the greatest extent possible, be based on previously determined customs values.

2. The methods of valuation to be employed under Article 7 should be those laid down in Article 1 to 6, inclusive, but a reasonable flexibility in the application of such methods would be in conformity with the aims and provisions of Article 7.

3. Some examples of reasonable flexibility are as follows:

(*a*) *Identical goods*—the requirement that the identical goods should be exported at or about the same time as the goods being valued could be flexibly interpreted; identical imported goods produced in a country other than the country of exportation of the goods being valued could be the basis for customs valuation; customs values of identical imported goods already determined under the provisions of Article 5 and 6 could be used.

(*b*) *Similar goods*—the requirement that the similar goods should be exported at or about the same time as the goods being valued could be flexibly interpreted; similar imported goods produced in a country other than the country of exportation of the goods being valued could be the basis for customs valuation; customs values of similar imported goods already determined under the provisions of Article 5 and 6 could be used.

(*c*) *Deductive method*—the requirement that the goods shall have been sold in the "condition as imported" in Article 5.1(*a*) could be flexibly interpreted; the "ninety days" requirement could be administered flexibly.

Note to Article 8

Paragraph 1 (a)(i)

The term "buying commissions" means fees paid by an importer to his agent for the service of representing him abroad in the purchase of the goods being valued.

Paragraph 1 (b)(ii)

1. There are two factors involved in the apportionment of the elements specified in Article 8.1(*b*)(ii) to the imported goods—the value of the element itself and the way in which that value is to be apportioned to the imported goods. The apportionment of these elements

should be made in a reasonable manner appropriate to the circumstances and in accordance with generally accepted accounting principles.

2. Concerning the value of the element, if the importer acquires the element from a seller not related to him at a given cost, the value of the element is that cost. If the element was produced by the importer or by a person related to him, its value would be the cost of producing it. If the element had been previously used by the importer, regardless of whether it had been acquired or produced by such importer, the original cost of acquisition or production would have to be adjusted downward to reflect its use in order to arrive at the value of the element.

3. Once a value has been determined for the element, it is necessary to apportion that value to the imported goods. Various possibilities exist. For example, the value might be apportioned to the first shipment if the importer wishes to pay duty on the entire value at one time. As another example, the importer may request that the value be apportioned over the number of units produced up to the time of the first shipment. As a further example, he may request that the value be apportioned over the entire anticipated production where contracts or firm commitments exist for that production. The method of apportionment used will depend upon the documentation provided by the importer.

4. As an illustration of the above, an importer provides the producer with a mould to be used in the production of the imported goods and contracts with him to buy 10,000 units. By the time of arrival of the first shipment of 1,000 units, the producer has already produced 4,000 units. The importer may request the customs administration to apportion the value of the mould over 1,000 units, 4,000 units or 10,000 units.

Paragraph 1(b)(iv)

1. Additions for the elements specified in Article 8.1(*b*)(iv) should be based on objective and quantifiable data. In order to minimize the burden for both the importer and customs administration in determining the values to be added, data readily available in the buyer's commercial record system should be used in so far as possible.

2. For those elements supplied by the buyer which were purchased or leased by the buyer, the addition would be the cost of the purchase or the lease. No addition shall be made for those elements available in the public domain, other than the cost of obtaining copies of them.

3. The ease with which it may be possible to calculate the values to be added will depend on a particular firm's structure and management practice, as well as its accounting methods.

4. For example, it is possible that a firm which imports a variety of products from several countries maintains the records of its design centre outside the country of importation in such a way as to show accurately the costs attributable to a given product. In such cases, a direct adjustment may appropriately be made under the provisions of Article 8.

5. In another case, a firm may carry the cost of the design centre outside the country of importation as a general overhead expense without allocation to specific products. In this instance, an appropriate adjustment could be made under the provisions of Article 8 with respect to the imported goods by apportioning total design centre costs over total production benefiting from the design centre and adding such apportioned cost on a unit basis to imports.

6. Variations in the above circumstances will, of course, require different factors to be considered in determining the proper method of allocation.

7. In cases where the production of the element in question involves a number of countries and over a period of time, the adjustment should be limited to the value actually added to that element outside the country of importation.

Paragraph 1(c)

1. The royalties and licence fees referred to in Article 8.1(*c*) may include, among other things, payments in respect to patents, trademarks and copyrights. However, the charges for the right to reproduce the imported goods in the country of importation shall be not added to the price actually paid or payable for the imported goods in determining the customs value.

2. Payments made by the buyer for the right to distribute or resell the imported goods shall not be added to the price actually paid or payable for the imported goods if such payments are not a condition of the sale for export to the country of importation of the imported goods.

Paragraph 3

Where objective and quantifiable data do not exist with regard to the additions required to be made under the provisions of Article 8, the transaction value cannot be determined under the provisions of Article 1. As an illustration of this, a royalty is paid on the basis of the price in a sale in the importing country of a litre of a particular product that was imported by the kilogram and made up into a solution after importation. If the royalty is based partially on the imported goods and partially on other factors which have nothing to do with the imported goods (such as when the imported goods are mixed with domestic in-

326-864 O - 5

gredients and are no longer separately identifiable, or when the royalty cannot be distinguished from special financial arrangements between the buyer and the seller), it would be inappropriate to attempt to make an addition for the royalty. However, if the amount of this royalty is based only on the imported goods and can be readily quantified, an addition to the price actually paid or payable can be made.

Note to Article 9

For the purposes of Article 9, "time of importation" may include the time of entry for customs purposes.

Note to Article 11

1. Article 11 provides the importer with the right to appeal against a valuation determination made by the customs administration for the goods being valued. Appeal may first be to a higher level in the customs administration, but the importer shall have the right in the final instance to appeal to the judiciary.

2. "Without penalty" means that the importer shall not be subject to a fine or threat of fine merely because he chose to exercise his right of appeal. Payment of normal court costs and lawyers' fees shall not be considered to be a fine.

3. However, nothing in Article 11 shall prevent a Party from requiring full payment of assessed customs duties prior to an appeal.

Note to Article 15

Paragraph 4

For the purposes of this Article, the term "persons" includes legal persons, where appropriate.

Paragraph 4(e)

For the purposes of this Agreement, one person shall be deemed to control another when the former is legally or operationally in a position to exercise restraint or direction over the latter.

Annex II

TECHNICAL COMMITTEE ON CUSTOMS VALUATION

1. In accordance with Article 18 of this Agreement, the Technical Committee shall be established under the auspices of the Customs Co-operation Council with a view, at the technical level, towards uniformity in interpretation and application of this Agreement.

2. The responsibilities of the Technical Committee shall include the following:

(*a*) to examine specific technical problems arising in the day-to-day administration of the customs valuation system of Parties and to give advisory opinions on appropriate solutions based upon the facts presented;

(*b*) to study, as requested, valuation laws, procedures and practices as they relate to this Agreement and to prepare reports on the results of such studies;

(*c*) to prepare and circulate annual reports on the technical aspects of the operation and status of this Agreement;

(*d*) to furnish such information and advice on any matters concerning the valuation of imported goods for customs purposes as may be requested by any Party or the Committee. Such information and advice may take the form of advisory opinions, commentaries or explanatory notes;

(*e*) to facilitate, as requested, technical assistance to Parties with a view to furthering the international acceptance of this Agreement; and

(*f*) to exercise such other responsibilities as the Committee may assign to it.

General

3. The Technical Committee shall attempt to conclude its work on specific matters, especially those referred to it by Parties or the Committee, in a reasonably short period of time.

4. The Technical Committee shall be assisted as appropriate in its activities by the Secretariat of the Customs Co-operation Council.

Representation

5. Each Party shall have the right to be represented on the Technical Committee. Each Party may nominate one delegate and one or more alternates to be its representatives on the Technical Committee. Such a Party so represented on the Technical Committee is hereinafter referred to as a member of the Technical Committee. Representatives of members of the Technical Committee may be assisted by advisers. The GATT secretariat may also attend such meetings with observer status.

6. Members of the Customs Co-operation Council who are not Parties may be represented at meetings of the Technical Committee by one delegate and one or more alternates. Such representatives shall attend meetings of the Technical Committee as observers.

7. Subject to the approval of the Chairman of the Technical Committee, the Secretary-General of the Customs Co-operation Council (hereinafter referred to as "the Secretary-General") may invite representatives of governments which are neither Parties nor members of the Customs Co-operation Council and representatives of inter-

national governmental and trade organizations to attend meetings of the Technical Committee as observers.

8. Nominations of delegates, alternates and advisers to meetings of the Technical Committee shall be made to the Secretary-General.

Technical Committee meetings

9. The Technical Committee shall meet as necessary but at least two times a year. The date of each meeting shall be fixed by the Technical Committee at its preceding session. The date of the meeting may be varied either at the request of any member of the Technical Committee concurred in by a simple majority of the members of the Technical Committee or, in cases requiring urgent attention, at the request of the Chairman.

10. The meetings of the Technical Committee shall be held at the headquarters of the Customs Co-operation Council unless otherwise decided.

11. The Secretary-General shall inform all members of the Technical Committee and those included under paragraphs 6 and 7 at least thirty days in advance, except in urgent cases, of the opening date of each session of the Technical Committee.

Agenda

12. A provisional agenda for each session shall be drawn up by the Secretary-General and circulated to the members of the Technical Committee and to those included under paragraphs 6 and 7 at least thirty days in advance of the session, except in urgent cases. This agenda shall comprise all items whose inclusion has been approved by the Technical Committee during its preceding session, all items included by the Chairman on his own initiative, and all items whose inclusion has been requested by the Secretary-General, by the Committee or by any member of the Technical Committee.

13. The Technical Committee shall determine its agenda at the opening of each session. During the session the agenda may be altered at any time by the Technical Committee.

Officers and conduct of business

14. The Technical Committee shall elect from among the delegates of its members a Chairman and one or more Vice-Chairmen. The Chairman and Vice-Chairmen shall each hold office for a period of one year. The retiring Chairman and Vice-Chairmen are eligible for re-election. A Chairman or Vice-Chairman who ceases to represent a member of the Technical Committee shall automatically lose his mandate.

15. If the Chairman is absent from any meeting or part thereof, a Vice-Chairman shall preside. In that event, the latter shall have the same powers and duties as the Chairman.

16. The Chairman of the meeting shall participate in the proceedings of the Technical Committee as such and not as the representative of a member of the Technical Committee.

17. In addition to exercising the powers conferred upon him elsewhere by these rules, the Chairman shall declare the opening and closing of each meeting, direct the discussion, accord the right to speak, and, pursuant to these rules, have control of the proceedings. The Chairman may also call a speaker to order if his remarks are not relevant.

18. During discussion of any matter a delegation may raise a point of order. In this event, the Chairman shall immediately state his ruling. If this ruling is challenged, the Chairman shall submit it to the meeting for decisions and it shall stand unless overruled.

19. The Secretary-General, or officers of the Secretariat designated by him, shall perform the secretarial work of meetings of the Technical Committee.

Quorum and voting

20. Representatives of a simple majority of the members of the Technical Committee shall constitute a quorum.

21. Each member of the Technical Committee shall have one vote. A decision of the Technical Committee shall be taken by a majority comprising at least two thirds of the members present. Regardless of the outcome of the vote on a particular matter, the Technical Committee shall be free to make a full report to the Committee and to the Customs Co-operation Council on that matter indicating the different views expressed in the relevant discussions.

Languages and records

22. The official languages of the Technical Committee shall be English, French and Spanish. Speeches or statements made in any of these three languages shall be immediately translated into the other official languages unless all delegations agree to dispense with translation. Speeches or statements made in any other language shall be translated into English, French and Spanish, subject to the same conditions, but in that event the delegation concerned shall provide the translation into English, French or Spanish. Only English, French and Spanish shall be used for the official documents of the Technical Committee. Memoranda and correspondence for the consideration of the Technical Committee must be presented in one of the official languages.

23. The Technical Committee shall draw up a report of all its sessions and, if the Chairman considers it necessary, minutes or summary records of its meetings. The Chairman or his designee shall report on the work of the Technical Committee at each meeting of the Committee and at each meeting of the Customs Co-operation Council.

Annex III

AD HOC PANELS

1. Ad hoc panels established by the Committee under this Agreement shall have the following responsibilities:

(*a*) to examine the matter referred to it by the Committee;

(*b*) to consult with the parties to the dispute and give full opportunity for them to develop a mutually satisfactory solution; and

(*c*) to make a statement concerning the facts of the matter as they relate to the application of the provisions of this Agreement and, make such findings as will assist the Committee in making recommendations or giving rulings on the matter.

2. In order to facilitate the constitution of panels, the Chairman of the Committee shall maintain an informal indicative list of government officials knowledgeable in the area of customs valuation and experienced in the field of trade relations and economic development. This list may also include persons other than government officials. In this connexion, each Party shall be invited to indicate at the beginning of every year to the Chairman of the Committee the name(s) of the one or two governmental experts whom the Parties would be willing to make available for such work. When a panel is established, the Chairman, after consultation with the Parties concerned, shall, within seven days of such establishment propose the composition of the panel consisting of three or five members and preferably government officials. The Parties directly concerned shall react within seven working days to nominations of panel members by the Chairman and shall not oppose nominations except for compelling reasons.

Citizens of countries whose governments are parties to a dispute shall not be eligible for membership of the panel concerned with that dispute. Panel members shall serve in their individual capacities and not as government representatives, nor as representatives of any organization. Governments or organizations shall therefore not give them instructions with regard to matters before a panel.

3. Each panel shall develop its own working procedures. All Parties having a substantial interest in the matter and having notified this to

the Committee shall have an opportunity to be heard. Each panel may consult and seek information and technical advice from any source it deems appropriate. Before a panel seeks such information or technical advice from a source within the jurisdiction of a Party, it shall inform the government of that Party. Any Party shall respond promptly and fully to any request by a panel for such information as the panel considers necessary and appropriate. Confidential information provided to the panel shall not be disclosed without the specific permission of the person or government providing such information. Where such information is requested from the panel but release of such information by the panel is not authorized, a non-confidential summary of the information, authorized by the person or government providing the information, will be provided.

4. Where the parties to the dispute have failed to reach a satisfactory solution the panel shall submit its findings in writing. The report of a panel should normally set out the rationale behind its findings. Where a settlement of the matter is reached between the parties, the report of the panel may be confined to a brief description of the dispute and to a statement that a solution has been reached.

5. Panels shall use such report of the Technical Committee as may have been issued under Article 20.4 of this Agreement as the basis for their consideration of issues that involve questions of a technical nature.

6. The time required by panels will vary with the particular case. They should aim to deliver their findings, and where appropriate, recommendations, to the Committee without undue delay, normally within a period of three months from the date that the panel was established.

7. To encourage development of mutually satisfactory solutions between the parties to a dispute and with a view to obtaining their comments, each panel should first submit the descriptive part of its report to the Parties concerned, and should subsequently submit to the parties to the dispute its conclusions, or an outline thereof, a reasonable period of time before they are circulated to the Parties.

PART 2.—TRADE AGREEMENT WITH SWITZERLAND ENTERED INTO ON DECEMBER 18 AND DECEMBER 21, 1979

DÉLÉGATION SUISSE,
AUPRÉS DES ORGANISATIONS
ÉCONOMIQUES INTERNATIONALES,
December 18, 1979.

[By express mail]

Mr. WILLIAM B. KELLY, Jr.,
Associate STR, c/o Permanent Mission, of the United States,
Economic Department, Rue de Lausanne 80.

DEAR MR. KELLY: Referring to our recent discussions and negotiations in Washington and Geneva in the context of the Tokyo Round concerning the treatment of non-competitive ASP chemicals in the U.S. Tariff Schedule XX, I have the honor to confirm the following agreement:

(1) The United States will break a special item out of item 410.22 in its Schedule XX to cover the following products:

mordant black, 75
mordant brown, 79
mordant red, 81
mordant red, 84
mordant blue, 1

for which the final rate of duty would be 9 percent.

(2) In return, Switzerland will make the following additional tariff cuts to be added to its Schedule LIX, notified as being of special interest to the United States:

-3701.20	Fr. 8.-
-3702.20	Fr. 8.-
-3703.10	Fr. 6.-

The staging of these additional reductions will be operated in parallel with the corresponding reductions in the U.S. Tariff Schedule, mentioned under para. 1 above.

Yours sincerely,

DR. B. EBERHARD,
Deputy Head of the Swiss
Delegation to the MTN.

OFFICE OF THE SPECIAL REPRESENTATIVE
FOR TRADE NEGOTIATIONS,
EXECUTIVE OFFICE OF THE PRESIDENT,
Washington, D.C., December 21, 1979.

DR. BALZ EBERHARD,
Deputy Head of the Swiss Delegation to the MTN,
Brundeshaus Ost, 3003 Berne, Switzerland

DEAR DR. EBERHARD: I am happy to acknowledge your letter of 18 December 1979 as follows:

"DEAR MR. KELLY: Referring to our recent discussions and negotiations in Washington and Geneva in the context of the Tokyo Round concerning the treatment of non-competitive ASP chemicals in the U.S. Tariff Schedule XX, I have the honor to confirm the following agreement:

(1) The United States will break a special item out of item 410.22 in its Schedule XX to cover the following products:

mordant black, 75
mordant brown, 79
mordant red, 81
mordant red, 84
mordant blue, 1

for which the final rate of duty would be 9 percent.

(2) In return, Switzerland will make the following additional tariff cuts to be added to its Schedule LIX, notified as being of special interest to the United States:

-3701.20	Fr. 8.-
-3702.20	Fr. 8.-
-3703.10	Fr. 6.-

"The staging of these additional reductions will be operated in parallel with the corresponding reductions in the U.S. Tariff Schedule, mentioned under para. 1 above.

Yours sincerely,

DR. B. EBERHARD,
Deputy Head of the Swiss Delegation to the MTN."

I confirm that the United States accepts the agreement as proposed in your letter of 18 December 1979.

Sincerely yours,

WILLIAM B. KELLY, JR.,
Associate Special Trade Representative.

326-864 O - 6

PART 3.—TRADE AGREEMENTS WITH THE EUROPEAN COMMUNITIES (INCLUDING THE EUROPEAN ECONOMIC COMMUNITY) ENTERED INTO ON DECEMBER 21, 1979, ON DECEMBER 27, 1979, AND ON JANUARY 2, 1980

DECEMBER 21, 1979.

TO THE DIRECTOR-GENERAL,
General Agreement on Tariffs and Trade, Geneva.

Negotiations Relating to Schedule XX—United States

There shall be withdrawn from Schedule XX existing concessions on the two items listed in the attached annex, which were initially negotiated with the European Economic Communities or in which the European Economic Communities has a principal supplying interest. The improved concessions on the two items, which are shown in the Annex, will be substituted for the concessions withdrawn through a rectification of Schedule XX annexed to the Geneva (1979) Protocol. Implementation of these conversions and concessions shall be at the stages and under the conditions specified in the Protocol, as amended by this agreement.

ARMIN DIVUL
On behalf of the European Economic Communities

ROBERT HERMATS
On behalf of the United States of America.

ANNEX

[In percent]

Tariff No.	Short description	Current rates of duty	Base rate	Final rate	1st stage reduction
[1] 445.5010	Polypropylene resins	1.3¢ per lb. + 10% ad. val.	15.7	12.5	14.5
626.02	Unwrought zinc; other than alloys of zinc.	0.7¢ per lb.	2.0	1.5	

[1] New item 445.52

ACCELERATION OF STAGING FOR ITEM 413.30 OF SCHEDULE XX (UNITED STATES OF AMERICA)

Pursuant to the Memorandum of Discussions of December 11, 1979, between the United States and the Commission of the European Communities, the United States, hereby, agrees to amend the implementation of its concession on Item 413.30 from 8 equal stages, pursuant to Part 3 C of Annex 1 to Schedule XX of the United States of America, to the following rates of duty, which shall become effective as listed below:

For Item 413.30, the rate of duty (percent ad valorem) for Stage 1 is 26.8, Stage 2 is 23.8, Stage 3 is 21.8, Stage 4 is 19.8, Stage 5 is 17.8, Stage 6 is 15.8, Stage 7 is 13.9, and Stage 8 is 11.9.

All other provisions of the Geneva (1979) protocol, including Part 3 C of Annex 1 to Schedule XX, (United States), shall remain in force.

In connection with the agreement set out above to accelerate tariff reductions on certain items it had notified under Section 225 of the Trade Agreements Act of 1979, the Commission intends to pursue discussions with the Office of the U.S. Trade Representative early in 1980 on the remaining items mentioned in the Memorandum of Discussions dated 11 December 1979.

Done in Brussels this 27th day of December, 1979,

For the United States
JOHN T. MCCARTHY.

For the Commission of the European Communities
RODERICK ABBOTT.

JANUARY 2, 1980.

Negotiations Relating to Schedule XX—United States

TO THE DIRECTOR-GENERAL,
General Agreement on Tariffs and Trade,
Geneva.

The existing concessions in Schedule XX on the two items listed in the attached annex shall be improved to the final rate shown in the annex. The improved concessions are made pursuant to the resolution of the US/EC Article XXVIII negotiation on certain woolen fabrics. Implementation of these concessions shall be at the stages and under the conditions specified in the Protocol as amended by this agreement.

On behalf of the European Economic Communities.

On behalf of the United States of America.

ANNEX

[In percent]

Tariff No.	Short description	Base rate of duty	Final rate
337.20	Woven fabrics wholly of silk not jacquard-figured	11	5
337.40	Woven fabrics wholly of silk jacquard figured	10.5	5

STAGING

	1980	1981	1982	1983 (percent)
337.20	10.4	8	6.5	5
337.40	9.9	8	6.5	5

PART 4.—TRADE AGREEMENT WITH THE DOMINICAN REPUBLIC ENTERED INTO ON JANUARY 2, 1979

[Translation]

DEPARTMENT OF STATE,
DIVISION OF LANGUAGE SERVICES,
December 21, 1979.

(No. 5145)

CENTRO DOMINICANO DE PROMOCION DE EXPORTACIONES
[*Dominican Center for Promotion of Exports*],
Plaza de la Independencia,
Santo Domingo, Dominican Republic.

Mr. MICHAEL H. GOLDMAN,
Adviser for Economic and Trade Affairs,
Embassy of the United States of America.

DEAR MR. GOLDMAN: This letter concerns the multinational negotiations (MTN) and the agreement concluded by the Governments of the Dominican Republic and the United States of America in the context of the MTN.

The Dominican Government is aware that the United States Government agreed to make greater efforts to reduce the import tariffs imposed on a number of products for which the Dominican Republic is a major supplier to the United States market. The list of such products includes:

Description:	*TSUSA*
Papaya fruit paste	152.65
Ginger root	161.37
Amber	188.30
Leather, nspf	791.25

The United States Government has now offered to increase its offer to include a 40 percent reduction in import tariffs on cigars with a value greater than $0.15 per unit. If this reduction in import tariffs on cigars (TSUSA 170.66) is achieved, the Dominican Government agrees not to seek an adjustment of offers if the above-mentioned products, for which the Dominican Republic is a major supplier, are not subject to the reduction of import tariffs agreed to previously by the United States Government.

Without further remarks, I remain,

Sincerely,

LUIS ALVAREZ RENTA,
Executive Director.

EMBASSY OF THE UNITED STATES OF AMERICA,
Santo Domingo, D.N., January 2, 1980.

Lic. LUIS ALVAREZ RENTA,

Director, Centro Dominicano de Promoción de Exportaciones (CEDOPEX), Plaza de la Independencia Ciudad.

DEAR LIC. ALVAREZ: This is to acknowledge receipt of your letter No. 5145 dated December 21, 1979 in which you indicated that in exchange for a reduction of 40% in the U.S. import duty applicable to cigars valued at over $0.15 each (TSUSA 170.66), the Government of the Dominican Republic agrees not to seek adjustment if U.S. duties are not reduced on the following products in the context of the multilateral trade negotiations (MTN):

Description:	*TSUSA*
Papaya paste	152.65
Ginger	161.37
Amber	188.30
Leather, nesp	791.25

The Government of the United States is prepared to offer a 40% reduction if its import duty, staged over time, on TSUSA 170.66 on the basis of the understanding described in your letter as indicated above, provided that the Government of the Dominican Republic includes TSUSA 137.10 (peppers, fresh, chilled or frozen) in which the Dominican Republic is a substantial supplier to the United States, in the list of products for which the Dominican Government will not seek adjustment if U.S. duties are not reduced in the context of the MTN.

This letter and your acknowledgement, together with your letter No. 5145 dated December 21, 1979, will constitute an Agreement between our respective countries.

Sincerely,

MICHAEL H. GOLDMAN,
Economic/Commercial Counselor.

[LS No. 95085–B]

January 2, 1980.

(No. 11)

CENTRO DOMINICANO DE PROMOCION DE EXPORTACIONES
[*Dominican Center for Promotion of Exports*],
Plaza de la Independencia,
Santo Domingo, Dominican Republic.

Mr. MICHAEL H. GOLDMAN,
Economic and Trade Adviser, Embassy of the United States of America, Santo Domingo, Dominican Republic.

DEAR MR. GOLDMAN: I hereby acknowledge receipt of your letter dated January 2, 1980, concerning the agreement between the Governments of the Dominican Republic and the United States of America in the context of the multilateral trade negotiations (MTN).

The Dominican Government agrees to include TSUSA 137.10 on the list of products contained in my letter No. 5145 dated December 21, 1979. The Dominican Republic is an important supplier of those products to the United States. The Dominican Government will not seek an adjustment of offers if those products are not subject to a reduction of import tariffs by the United States Government, provided that import tariffs under TSUSA 170.66 on cigars with a value greater than 15 cents each are reduced in stages within the context of the MTN to a total of 40 percent.

This letter together with my letter No. 5145 dated December 21, 1979, and your reply of January 2, 1980, shall constitute an agreement between our two countries.

Sincerely,

LUIS ALVAREZ RENTA,
Executive Director.

PART 5.—TRADE AGREEMENT WITH INDONESIA ENTERED INTO ON DECEMBER 20, AND 29, 1979

JAKARTA, INDONESIA, *December 20, 1979.*

DARRY SALIM,
Director for International Trade Relations,
Department of Trade, Jakarta, Indonesia

DEAR MR. SALIM: I have the honor to refer to the U.S.-Indonesian Memorandum of Understanding on the Multilateral Trade Negotiations.

I have been informed that the U.S. International Trade Commission views as inadequate the "p.m." designation under current and offered duties on hand painted batik. In order to preserve the Presidential authority to institute reduction on batik of the order of magnitude envisaged after January 3, 1980, it is necessary to include a specific figure.

Therefore, I am requesting your agreement to amend the text of the Memorandum of Understanding signed November 29, 1979. Such amendment would consist of the deletion of the phrase, repeated twice, quote p.m. unquote following the item ex numerous—hand painted batik and the insertion of the phrase quote subject to 50 percent tariff reduction unquote. Accordingly, the item would now read quote ex numerous—hand painted batik (subject to 50 percent tariff reduction and subject to whether a determination can be made to distinguish between hand painted and machine painted batik, and, if so, the adoption of a mutually satisfactory certification system by Indonesia).

In order to meet the U.S. statutory deadline I will need to receive your response as soon as possible but in no event no later than December 30, 1979.

Sincerely,

HENRY BARDACH,
Counselor for Economic
and Commercial Affairs.

REPUBLIK INDONESIA,
DEPARTEMEN PERDAGANGAN DAN KOPERASI,
Jakarta, December 27, 1979.

Mr. HENRY BARDACH,
Counselor for Economic and Commercial Affairs, the Embassy of the United States of America, Jakarta.

DEAR MR. BARDACH: I have the honor to refer to the US-Indonesian Memorandum of Understanding on the Multilateral Trade Negotia-

tions (MTN). I understand that in order for your Government to retain its statutory authority to reduce tariffs on hand-painted batiks of interest to Indonesia it is necessary to amend the text of that Memorandum of Understanding. Such amendment would consist of the deletion of the phrase p.m. following the item ex numerous—hand-painted bariks and the insertion of the phrase subject to 50 percent tariff reduction.

Accordingly, the item would now read: ex numerous—hand painted-batiks (subject to 50 percent tariff reduction and subject to whether a determination can be made to distinguish between hand-painted and machine-painted batik, and, if so, the adoption of a mutually satisfactory certification system by Indonesia).

I further have the honor to inform you that such an amendment is acceptable to my Government.

Thank you for your kind attention.

Sincerely yours,

DARRY SALIM,
Director for External Trade Relations,
Department of Trade and Cooperatives.

326-864 O - 7

(T.D. 80–219)

Cotton and Manmade Fiber Textile Products—Restriction on Entry

Restriction on entry of cotton and manmade fiber textile products manufactured or produced in India

There is published below a directive of July 22, 1980, received by the Commissioner of Customs from the chairman, Committee for the Implementation of Textile Agreements, concerning restriction on entry of cotton and manmade fiber textile products in categories 335 and 641 manufactured or produced in India. This directive amends, but does not cancel, that committee's directive of December 21, 1979 (T.D. 80–58).

This directive was published in the Federal Register on July 25, 1980 (45 F.R. 49632), by the committee.

(QUO–2–1)

Dated: August 26, 1980.

WILLIAM D. SLYNE
(For Richard R. Rosettie, Acting
Director, Duty Assessment Division).

U.S. DEPARTMENT OF COMMERCE,
INTERNATIONAL TRADE ADMINISTRATION,
Washington, D.C., July 22, 1980.

Committee for the Implementation of Textile Agreements

COMMISSIONER OF CUSTOMS,
Department of the Treasury,
Washington, D.C.

DEAR MR. COMMISSIONER: This directive amends, but does not cancel, the directive issued to you on December 21, 1979, by the chairman, Committee for the Implementation of Textile Agreements, concerning imports into the United States of certain cotton, wool, and manmade fiber textile products, produced or manufactured in India.

Under the terms of the Arrangement Regarding International Trade in Textiles done at Geneva on December 20, 1973, as extended on December 15, 1977; pursuant to the Bilateral Cotton, Wool and Man-Made Fiber Textile Agreement of December 30, 1977, as amended, between the Governments of the United States and India; and in accordance with the provisions of Executive Order 11651 of March 3, 1972, as amended by Executive Order 11951 of January 6, 1977, you

are directed to prohibit, effective on July 25, 1980, and for the 12-month period beginning on January 1, 1980, and extending through December 31, 1980, entry into the United States for consumption, and withdrawal from warehouse for consumption, of textile products in categories 335 and 641 in excess of the following adjusted levels of restraint:

Category	*Adjusted 12-month levels of restraint* [1]
335	24,213 dozen
641	68,966 dozen

The actions taken with respect to the Government of India and with respect to imports of cotton and manmade fiber textile products from India have been determined by the Committee for the Implementation of Textile Agreements to involve foreign affairs functions of the United States. Therefore, the directions to the Commissioner of Customs, which are necessary for the implementation of such actions, fall within the foreign affairs exception to the rulemaking provisions of 5 U.S.C. 553. This letter will be published in the Federal Register.

Sincerely,

PAUL T. O'DAY,
Chairman, Committee for the Implementation of Textile Agreements.

(T.D. 80-220)

Cotton, Wool, and Manmade Fiber Textile Products—Restriction on Entry

Restriction on entry of cotton, wool, and manmade fiber textile products manufactured or produced in the People's Republic of China

There is published below a directive of August 1, 1980, received by the Commissioner of Customs from the acting chairman, Committee for the Implementation of Textile Agreements, announcing export visa requirements for cotton, wool, and manmade fiber textile products manufactured or produced in the People's Republic of China.

This directive was published in the Federal Register on August 5, 1980 (45 F.R. 51872), by the committee.

(QUO-2-1)

Dated: August 26, 1980.

WILLIAM D. SLYNE
(For Richard R. Rosettie, Acting Director, Duty Assessment Division).

---

[1] The levels of restraint have not been adjusted to reflect any imports after Dec. 31, 1979.

U.S. DEPARTMENT OF COMMERCE,
INTERNATIONAL TRADE ADMINISTRATION,
Washington, D.C., August 1, 1980.

Committee for the Implementation of Textile Agreements

COMMISSIONER OF CUSTOMS,
Department of the Treasury,
Washington, D.C.

DEAR MR. COMMISSIONER: Under the terms of the Arrangement Regarding International Trade in Textiles done at Geneva on December 20, 1973, as extended on December 15, 1977, and in accordance with the provisions of Executive Order 11651 of March 3, 1972, as amended by Executive Order 11951 of January 6, 1977, you are directed to prohibit, effective on August 20, 1980, and until further notice, entry into the United States for consumption and withdrawal from warehouse for consumption of cotton, wool, and manmade fiber textile products in categories 300–369, 400–469, and 600–669, produced or manufactured in the People's Republic of China and exported on and after August 20, 1980, from the People's Republic of China or from any other country of exportation, for which the Government of the People's Republic of China has not issued an appropriate export visa, fully described below. Merchandise exported before August 20, 1980, shall be permitted entry without a visa until October 6, 1980.

The export visa will be an original circular stamp in blue ink on the front of the invoice (Special Customs invoice form 5515, successor document, or commercial invoice, when that form is used) and will be signed by an authorized official of the Government of the People's Republic of China. A facsimile of the visa stamp is enclosed.

Merchandise for the personal use of the importer and not for resale does not require a visa, regardless of value.

You are further directed to permit entry into the United States for consumption and withdrawal from warehouse for consumption of designated shipments of cotton, wool, and/or manmade fiber textile products, produced or manufactured in the People's Republic of China, notwithstanding the designated shipment or shipments do not fulfill the aforementioned visa requirements, whenever requested to do so in writing by the Chairman of the Committee for the Implementation of Textile Agreements.

A detailed description of the textile categories in terms of TSUSA numbers was published in the Federal Register on February 28, 1980 (45 F.R. 13172), as amended on April 23, 1980 (45 F.R. 27463).

In carrying out the above directions, entry into the United States for consumption shall be construed to include entry for consumption into the Commonwealth of Puerto Rico.

The action taken with respect to the Government of the People's Republic of China and with respect to imports of cotton, wool, and manmade fiber textiles and textile products from China has been determined by the Committee for the Implementation of Textile Agreements to involve foreign affairs functions of the United States. Therefore, these directions to the Commissioner of Customs, which are necessary for the implementation of such actions, fall within the foreign affairs exception to the rulemaking provisions of 5 U.S.C. 553. This letter will be published in the Federal Register.

Sincerely,

ARTHUR GAREL,
Acting Chairman, Committee for the Implementation of Textile Agreements.

Enclosure.

VISA STAMP FOR COTTON, WOOL AND MAN-MADE FIBER TEXTILE PRODUCTS EXPORTED TO THE UNITED STATES

U.S. Customs Service

General Notice

(063419)

American Manufacturer's Petition

Notice of receipt of American manufacturer's petition to classify speedometers and odometers used on "exercisers"

AGENCY: U.S. Customs Service, Department of the Treasury.

ACTION: Notice of receipt of American manufacturer's petition.

SUMMARY: Customs has received a petition from an American manufacturer requesting the classification of speedometers and odometers used on exercisers (stationary exercise cycles) under the provision for bicycle speedometers, rather than under the provisions for other parts of bicycles, or for other revolution counters, or for sport, gymnastic, athletic, or playground equipment and parts thereof.

DATES: Interested parties may comment on this petition, and comments (preferably in triplicate) must be received on or before 30 days from the date of publication in the Federal Register.

ADDRESS: Comments may be addressed to the Commissioner of Customs, attention: Regulations and Research Division, room 2426, 1301 Constitution Avenue NW., Washington, D.C. 20229.

FOR FURTHER INFORMATION CONTACT: Simon Cain, Classification and Value Division, U.S. Customs Service, 1301 Constitution Avenue NW., Washington, D.C. 20229; 202-566-5727.

SUPPLEMENTARY INFORMATION:

BACKGROUND

A petition has been filed under section 516 of the Tariff Act of 1930, as amended (19 U.S.C. 1516), by an American manufacturer of speedometers for use on bicycles and exercisers. The petitioner contends that speedometers and odometers used on exercisers should be

classifiable under the provision for bicycle speedometers in item 711.93, Tariff Schedules of the United States (TSUS), rather than under the provision for parts of bicycles in item 732.42, TSUS, or under the provision for revolution counters or other speedometers in item 711.98, TSUS, or under the provision for sport, gymnastic, athletic, or playground equipment and parts thereof in item 735.20, TSUS.

Speedometers of a type chiefly used on exercisers, such as double-gear, hub-drive speedometers constructed so that the drive chain is attached to the righthand side of the front wheel are classifiable as other speedometers in item 711.98, TSUS. However, speedometers of a type chiefly used on bicycles, such as standard single-gear, are classifiable as bicycle speedometers in item 711.93, TSUS.

COMMENTS

Pursuant to section 175.21(a) of the Customs Regulations (19 CFR 175.21(a)), the Customs Service invites written comments on this petition from all interested parties.

The American manufacturer's petition, as well as all comments received in response to this notice, will be available for public inspection in accordance with sections 103.8(b) and 175.21(b) of the Customs Regulations (19 CFR 103.8(b), 175.21(b)) during regular business hours at the Regulations and Research Division, Headquarters, U.S. Customs Service, room 2426, 1301 Constitution Avenue NW., Washington, D.C. 20229.

AUTHORITY

This notice is published in accordance with section 175.21(a), of the Customs Regulations (19 CFR 175.21(a)).

Dated: July 31, 1980.

SALVATORE E. CARAMAGNO
(For Donald W. Lewis, Director,
Office of Regulations and Rulings).

U.S. Customs Service

Customs Service Decisions

DEPARTMENT OF THE TREASURY,
OFFICE OF THE COMMISSIONER OF CUSTOMS,
Washington, D.C.

The following are decisions made by the U.S. Customs Service where the issues involved are of sufficient interest or importance to warrant publication in the CUSTOMS BULLETIN.

Dated: August 19, 1980.

JOHN T. ROTH
(For Director, Office of
Regulations and Rulings).

(C.S.D. 80-151)

Generalized System of Preferences: Substantial Transformation in Beneficiary Developing Country

Date: August 17, 1979
File: R:CV:S JLV
055691

This ruling concerns those costs of materials and direct costs of processing operations which are includable in determining whether extension cord sets, produced in Mexico from foreign materials, qualify for duty-free treatment under the Generalized System of Preferences (GSP).

Issues.—(1) Are any of the component materials of extension cord sets materials produced in Mexico within the meaning of section 503(b)(2)(A)(i), Trade Act of 1974 (19 U.S.C. 2463(b)(2)(A)(i)), and section 10.177(a)(2), Customs Regulations (19 CFR 10.177 (a)(2))?

(2) Are the costs of assembling the component materials into extension cord sets direct costs of processing operations within the meaning of section 502(b)(2)(A)(ii), Trade Act of 1974 (19 U.S.C.

2463(b)(2)(A)(ii)), and section 10.178(a), Customs Regulations (19 CFR 10.178(a))?

Facts.—Extension cord sets would be manufactured in Mexico from the following materials imported into Mexico from the United States: bunched copper wire imported on large reels; vinyl extrusion compound, vinyl molding compound, and styrene molding compound imported in the form of pellets; plug cap blades and connector contacts cut to shape and form and imported on continuous rolls; and safety caps. These materials would be processed to form extension cord sets.

First, the copper wire would be covered by extrusion of the vinyl extrusion compound so as to form vinyl-covered (insulated) wire. The insulated wire would be wound into 50,000-foot reels. The insulated wire would then be cut to specific lengths and the ends would be stripped of the insulation in preparation for the contacts and blades.

Metal contacts and blades would be crimped onto the exposed wire ends of each cord length. Vinyl pellets would then be injection molded to form a cap on the blade end (male end) of each cord and styrene pellets would be injection molded to form a connector service block on the connector end (female end) of each cord. Finally, a safety cap would be assembled onto each connector service block to form completed extension cord sets.

Law and analysis.—Insulated electrical conductors fitted with connectors and classifiable under item 688.15, Tariff Schedules of the United States, are eligible for duty-free treatment under the GSP and may be entered free of duty from Mexico if they otherwise qualify. One of the requirements for such entry under the GSP is that the sum of (1) the cost or value of materials produced in the beneficiary developing country (BDC) plus (2) the direct costs of processing operations in that BDC must be not less than 35 percent of the appraised value of the eligible article at the time of its entry into the customs territory of the United States. See section 503(b)(2)(A) of the Trade Act of 1974.

Under the proposed operation, all the materials used to produce the extension cords would be imported into Mexico from the United States. Therefore, the value of such materials will not be includable in the 35-percent requirement for the cords unless the materials are substantially transformed in Mexico into new and different articles of commerce prior to being used in the production of the cords. See section 10.177(a)(2) of the Customs Regulations. That is, the imported materials must be processed into intermediate products which are themselves articles of commerce distinct from the materials as imported and which are constituent materials used in the subsequent production of the GSP-eligible articles.

The plug blades, connector contacts, and safety caps are not processed into new and different articles of commerce prior to being assembled into the eligible article. They are assembled in their condition as imported into the extension cord sets. Therefore, the costs of these materials are not includable in the 35-percent value-added requirement for the extension cord sets.

The injection molding of the vinyl and styrene pellets into plug and connector housings results in a substantial transformation of those materials. However, the issue is whether they are transformed into new and different articles of commerce which become constituent materials used in the manufacture of the extension cord sets. It is the opinion of the Customs Service that they are not. Therefore, the costs of the plastic materials are not includable in the 35-percent value-added requirement for the extension cord sets.

Although the molding of the plastics is a manufacture of the plastics, the resulting vinyl plug or connector housings are not in fact independent intermediate products. They never exist apart from the eligible article. Therefore, they are not substantially transformed constituent materials for the purposes of the GSP.

The extrusion of the vinyl pellets over the copper wire to produce insulated copper wire is a processing operation which results in a new and different article of commerce. The resulting insulated wire is distinct from the imported plastic and wire materials, and it is a constituent material used in the production of the extension cords within the meaning of section 10.177(a)(2) of the Customs Regulations. Therefore, the costs of the insulated wire material are includable in the 35-percent value-added requirement for the extension cord sets.

In addition to the costs of the insulated wire materials, the direct costs of processing operations may also be included in order to determine whether the extension cord sets qualify for the GSP under the 35-percent value-added requirement. The costs attributed to the cutting and stripping of cord lengths, assembly of the plug blades and connector contacts, injection molding of the plug and connector housings, and assembly of the safety caps are includable as direct costs of processing operations if such costs are directly incurred in, or can be reasonably allocated to, the manufacture or assembly of the extension cord sets. However, without more explicit information as to what costs are being considered, a more specific determination is not possible.

Holdings.—(1) The vinyl-insulated wire, produced by extrusion of vinyl over wire, is a new and different article of commerce, and, if used in the manufacture of the extension cord sets, is a substantially transformed constituent material for purposes of the GSP. The other materials are not substantially transformed constituent materials

because the processing of such materials does not result in intermediate products that are distinct from the materials as imported and that are subsequently used in the production of the eligible article.

(2) The costs of the operations described in the assembly of the extension cord sets are includable in the 35-percent value-added test for the cords if such costs are directly incurred in, or can be reasonably allocated to, the manufacture or assembly of the cords within the meaning of section 10.178 of the Customs Regulations.

(C.S.D. 80–152)

Export Value: Whether Sales to a Related Selected Purchaser Fairly Reflect Market Value

Date: August 29, 1979
File: R:CV:V JV
061229

This request concerns the proper appraised values for certain bicycle parts from Italy, appraised under export value, section 402(b), Tariff Act of 1930, as amended.

Issue.—Whether the transaction price, i.e., invoiced unit price less 43 percent, between the related parties properly establishes the export value of the merchandise undergoing appraisement?

Facts.—Prior to 1975, sales of similar parts were made to unrelated purchasers in the United States at the Italian price list price prevailing on the date of exportation at discounts ranging from 25 to 35 percent. However, in December 1975, an importing subsidiary was formed for the specific purpose of acting as exclusive U.S. distributor. At that time, approximately 10 percent of the stock ownership in the subsidiary was held by the president and majority shareholder of the exporting company. The balance of shares was held by two investor/associates, each of whom personally committed $100,000 in startup capital. One of the investors became president and chief operating officer. The other held no position with, nor did he participate in anyway respecting the operation of the company. The minority shareholder's contribution of 10 percent represented financing in excess of the $200,000 pledged by the two associates. For the most part, he too had no voice in the day-to-day operations of the subsidiary. The relationship of the parties is governed by a distributorship agreement, executed on December 17, 1975 (exhibit A).

The record reflects that because of his substantial pecuniary interest in the newly formed corporation, the importer originally sought to negotiate the lowest possible price, i.e., 50 percent off the manufac-

turer's price list. However, through negotiations, the parties agreed to a discount of 43 percent for the ensuing year (1976), which was made part of the agreement. The second round of price negotiations occurred during October 1976 at the semiannual shareholder's meeting (minutes attached as exhibit E), at which time the importer again attempted to negotiate a more favorable price. However, for the reasons indicated in the minutes, it was agreed to maintain the price list price less 43 percent for all shipments during 1977, as well as all purchase orders placed during that year. This price agreement was effective through March 1978. On March 17, 1978 (exhibit H), the parties agreed to increases with respect to shipments in April, May, July, and September 1978. Further increases were scheduled to take effect in January 1979.

On or about March 20, 1977, the exporter acquired all of the outstanding stock in the subsidiary. However, pursuant to the terms of the distributorship agreement, the importer remained in the position of president and chief operating officer until early 1979.

Law and analysis.—Before we can adopt the transaction price as establishing the export value of the merchandise, it must represent the price, at the time of exportation to the United States of the merchandise undergoing appraisement, at which such or similar merchandise is freely sold or, in the absence of sales, offered for sale in the principal markets of the country of exportation. The controlling language of this excerpt of section 402(b) is the term "freely sold", which is defined in section 402(f)(1)(B) of the Tariff Act of 1930, as amended, as "sold or offered for sale in the ordinary course of trade to one or more selected purchasers at a price which fairly reflects the market value of the merchandise."

T.D. 76–118, to the extent modified by T.D. 78–344, constitutes the present position of the Customs Service regarding the criteria which may be used in determining whether the price in sales to a selected purchaser fairly reflects the market value where, as in the instant case, there are sales only to a related selected purchaser. The foregoing decisions are a response to recent decisions of the Court of Customs and Patent Appeals on the matter. What is required is that evidence be furnished showing that the transactions were at arm's length, and that the relationship of the parties does not preclude a finding that the price fairly reflects market value. Evidence to prove an arm's length transaction and a fair reflection of market value, includes, but is not limited to, the circumstances of sales, e.g., the manner in which the prices were determined, the relative markups of the importer and exporter, quantities and levels of trade, and the presence or absence of assists, as well as other dutiable elements of value required to be considered in appraising the merchandise undergoing appraisement.

We will proceed to examine the instant transactions in light of the above decisions. The available evidence demonstrates that from the inception of their relationship, the subsidiary functioned as an independent, self-sufficient entity, responsible for its own profits and losses. For example, it determined its own marketing and purchasing policies, selected its own customers and negotiated its own prices, and could do so without first obtaining approval from its parent. It maintained its own offices in the United States and performed all of its own ministerial functions independently of the parent. In addition, it was solely responsible for the payment of all charges, duties, and taxes incidental to the exportation of the merchandise, and bore the risk of loss.

You point out that certain provisions of the distributorship agreement (to wit: pars. 11 and 15) are inconsistent with the degree of independence that must exist in an arm's length relationship. Paragraph 11 provides, in pertinent part, that the distributor furnish the manufacturer with quarterly reports concerning market conditions in the United States, including marketing strategy and achievements; that the manufacturer provide the distributor free of charge, all information necessary for it to prepare price lists and catalogs in English; that it agree to provide training at its foreign facility in matters relating to the distributor's performance under the agreement; and that the manufacturer will share a portion of the distributor's advertising budget, not to exceed the sum of $50,000 for the first contract year.

Paragraph 15 requires that the U.S. distributor not sell, promote, market, or redistribute any products which, in the opinion of the seller, is competitive with its products.

We cannot agree with your contention that the foregoing provisions, ipso facto, preclude an arm's length relationship between the parties. On the contrary, contractual requirements of this type represent standard commercial practice frequently found in distributorship arrangements.

The inquirer has provided information enabling a comparison of the relative markups of the parties for the first quarter of 1978, the final period in which the transaction price was in effect. The parts chosen for comparison are high—volume dollar items, and comprise approximately 50 percent of the parts shipped. Several conclusions can be drawn from these comparisons. First, each company in comparison to the other, appears to have made a reasonable profit on sales. Second, no inferences can be drawn to logically support the conclusion that an attempt was made to transfer profits or other costs from parent to subsidiary so as to raise the spector of a rigged or special intracompany price or, third, that the element of profit to

be considered in appraising the merchandise undergoing appraisement is deficient so as to preclude the finding of a freely offered price under section 402(b).

In our opinion, the facts strongly support the conclusion that the transaction price was the result of arm's length negotiations, as tested by the legally accepted criteria, and fairly reflects the market value of the merchandise. The mere fact that the exporter acquired all of the outstanding stock in the subsidiary in March 1977 and thereafter exercised a modicum of control over its activities would not, in our view, alter this result, inasmuch as the price became effective in December 1975, and continued through March 1978.

Holding.—The transaction price establishes the export value of the merchandise.

(C.S.D. 80-153)

Classification: Pleated Polyester Fabric, Aluminum Coated and Hole Punched, as an Article

Date: October 22, 1979
File: CIA-2:R:CV:MC
061517 PR

This ruling is in response to Internal Advice Request No. 116/79, concerning the tariff classification of a pleated polyester fabric used in making window shades.

Issue.—The issue presented is whether the subject merchandise, as imported, is so far dedicated for use as an article of commerce that it has ceased to be classifiable under the provisions for fabrics in the piece, and, if so, whether the merchandise is classifiable under the specific provisions for furnishings or under the provisions for articles not specially provided for.

Facts.—The subject merchandise consists of a woven polyester fabric which has been covered on one side by vacuum-deposited aluminum. The aluminum is visible only by reason of a change in color and does not constitute a coating or filling for tariff purposes. We assume that the imported merchandise is not in chief value of the aluminum. After the aluminum is applied, the material is permanently pleated by a heat-setting method. According to information submitted by the importer, this fabric is produced in 150-centimeter widths and in lengths of 100 meters. It is imported with holes punched in both ends of the material completely through all the pleats. Prior to importation, the material is cut into widths according to the orders placed by the American distributors. In practice, the distributor does not

order sizes for customers' specific needs, but will usually purchase the merchandise in widths of from 35 to 65 centimeters and will combine two or more widths to obtain the size blind required. This is done by overlapping the materials to line up the holes on two adjacent panels and running a cord through the overlapping holes.

Law and analyis.—The three tariff provisions which must be considered in determining the proper classification of this merchandise are (1) other woven fabrics of manmade fibers, in item 338.30, Tariff Schedules of the United States (TSUS); (2) other furnishings, not ornamented, of manmade fibers, not knit and not of pile or tufted construction, in item 367.60, TSUS; and (3) other articles not specially provided for, not ornamented, of manmade fibers, not knit and not of pile construction, in item 389.62, TSUS.

In order to determine which one of the three tariff provisions most specifically describes the subject merchandise, it must be ascertained whether the merchandise, as imported, has been so far manufactured that it constitutes something other than fabric in the piece, (i.e. window blinds or shades). General headnote 10(h), TSUS, provides that unless the context requires otherwise, a tariff description for an article covers such article whether finished or not finished.

The tariff schedules do not define the term "fabric" for tariff purposes other than to require that in order to be classifiable in parts 3 and 4, schedule 3, TSUS, fabrics must be "in the piece." See headnote 1, part 3, and headnote 1, subpart A, part 4. In the commerce and industry of this country, the term "in the piece" usually refers to goods sold by the length which are intended to be cut into smaller articles, the identity of which is normally not ascertainable.

What follows is a review of some of the judicial decisions concerning the classification of merchandise as material or as unfinished articiles and the distinctions involved.

Generally, the courts have held that to be classified as an unfinished article, merchandise must not only be dedicated to use as the completed article, but also be identifiable as a specific article. Dedication by itself is not sufficient. In *The Harding Co.* v. *United States*, 23 CCPA 250, T.D. 48109 (1936), brake lining materials in rolls of 100 feet, which had to be cut to fit the individual brake shoes, were held not to be classifiable as parts of automobiles because the identity of the individual article was not fixed with certainty. In *American Import Co.* v. *United States*, 26 CCPA 72, T.D. 49612 (1938), the court held that artificial gut, of silk, imported in 60-foot lengths, even though dedicated for use as fishing leaders, was not classifiable under a provision for unfinished leaders. There the court stated:

> The mere fact that a thing has but one use does not require that it be considered as an article unfinished. If the material has been so far processed from the "material" to a partly completed article, then it loses its character as material and takes on the characteristics of the article for which the material was intended. (At pp. 75 and 76.)

Likewise, in *Bendix Mouldings, Inc.* v. *United States*, 73 Cust. Ct. 204, C.D. 4576 (1974), lengths of moldings dedicated to use in picture or mirror frames, but which had to be cut to desired sizes, were held not to be classifiable as picture frames.

> The extent and completeness of their dedication to use as frames is to no avail since in their imported condition they are not dedicated to the making of any particular frame. (At p. 207.)

Fabrics may be considered to be dedicated as specific articles of commerce in their condition as they leave the loom if they contain clearly defined cutting lines, *Oppenheimer* v. *United States*, 66 Fed. 52 (1895) and *United States* v. *Buss & Co.*, 5 Ct. Cust. Appls. 110, T.D. Appls. 110, T.D. 34138 (1914), or if they have patterns which dictate both where that fabric has to be cut and what it can be used for, *United States* v. *M. H. Rogers, Inc.*, 18 CCPA 271, T.D. 44448 (1930).

Merchandise will not be considered dedicated to a specific use by the courts if there is some, although limited other commercial use of that merchandise. See *Snow's U.S. Sample Express Co.* v. *United States*, 8 Ct. Cust. Appls. 17, T.D. 37161 (1917), where cotton fabric printed with the designs of tablecloths (or bedspreads), but which was sometimes used for curtains, was held not classifiable as unfinished tablecloths or bedspreads; and *United States* v. *Tilton Textile Inc.*, 65 CCPA 18, C.A.D. 1199 (1977), where it was held that a fabric which could be made into a pile fabric by cutting the float yarns on the surface of the fabric was not classifiable as an unfinished pile fabric because there was testimony that the fabric had some, although limited commercial value in its condition as imported.

This is not to say that merchandise containing clear lines for cutting or actually having been cut, will automatically be considered an unfinished article within the meaning of General Headnote 10(h). In *Avins Industrial Products Co.*, v. *United States*, 72 Cust. Ct. 43, C.D. 4503 (1974), steel wire which was cut to specific sizes for use as antennas, but which was capable of other uses, was classified as wire and not under the provision for parts of antennas.

Running through the above cited cases is the concept that in order to be considered an unfinished article, the identity of the unfinished article must be fixed with certainty and it must have no other real commercial value. It must also no longer be mere material, for the making of other articles. In *Paramount Import Co., Inc.* v. *United*

States, 45 CCPA 82, C.A.D. 677 (1958), the court stated in ruling on whether certain discs were classifiable as unfinished buttons:

> An article commercially suitable and commercially used for the making of different things is a material which is just as much adapted to the production of all of them as it is to the production of anyone of them. (At p. 85.)

In certain circumstances, merchandise may be processed beyond the material stage and be classifiable as an article even though its individual identity is not "fixed with certainty." In *Boyle Needle Co.* v. *United States*, 5 Ct. Cust. Appls. 43, T.D. 34009 (1913), the court upheld the classification of coiled steel wire under a provision for articles manufactured of wire, even though the wire was imported in lengths of 50 to 150 feet and would, after importation, be cut into lengths of 28 to 52 inches for use, after further processing, as sash curtain rods.

> The coiling process gives the wire a new and peculiar character, name, and use. The new article is not a "slender rod, strand, or thread of ductile metal," which is the accepted definition of the word "wire" but is an article permanently and essentially differing therefrom in form * * *. The new article has a use as a spring which differs from that of simple wire, and results from the changed form into which the original wire has been permanently converted. (At p. 44.)

Following *Boyle Needle*, the Customs Service believes that the instant merchandise has been manufactured beyond the fabric stage. It is dedicated to use as window blinds or shades and has lost its character as material. Although no evidence has been presented one way or the other, it does not appear that the subject merchandise would have any other commercial value. However, because the instant merchandise is imported in 100-meter lengths, while it may be dedicated to the making of window blinds in general, it is not dedicated to making a particular blind. Therefore, following *Harding* and *Bendix, supra*, the merchandise cannot be classified in item 367.60 as an unfinished furnishing.

Thus, the next step to be resolved is whether merchandise which has, in fact, been processed beyond the fabric stage so that it can no longer be classified as fabric, but which has not been processed to the extent that it constitutes an unfinished furnishing may be classified under a provision for articles not specially provided for. Such a result has judicial precedent other than the *Boyle Needle* case.

In re Mills, 56 Fed. 820 (1893), involved cotton fabric that was imported in long lengths with stitched hems. The fabric was used mostly for wearing apparel and had some use as curtains. It was classified by Customs as partly finished wearing apparel. The importer

claimed that the merchandise should have been classified under the provisions for manufactures of cotton.

The Board of General Appraisers classified the merchandise under the provision for cotton cloth. In upholding the claim of the importer that the merchandise should have been classified as manufactures of cotton, the court stated that in order to be classified as unfinished wearing apparel, the merchandise:

> must at least be made up sufficiently far to enable us to identify the particular article of wearing apparel that is going to be made out of it. (At p. 821.)

At this point, an observation concerning the intended broad coverage of schedule 3 is appropriate. The term "textile materials" is defined in headnote 2(a), schedule 3, as including (1) the fibers provided for in part 1 of schedule 3; (2) yarn intermediates and yarns provided for in parts 1 and 4, schedule 3; (3) cordage provided for in parts 2 and 4, schedule 3; (4) fabric provided for in parts 3 and 4, schedule 3; (5) braids; and (6) with one narrow exception, articles produced from any of the foregoing. Parts 1 through 4, schedule 3, include provisions for fibers, yarn intermediates, yarns, cordage, and fabrics of vegetable fibers, wool, silk, and manmade fibers. Thus, all articles except those specifically listed in headnote 1, schedule 3, which are wholly or almost wholly of, or in chief value of (depending on the wording of the concerned provision) vegetable fibers, wool, silk, or manmade fibers were intended to be classifiable in schedule 3.

Further evidence of the broad scope of schedule 3 is found in the Tariff Classification Study, C.I.E. 1/64, volume 1, page 226, which states:

> In order to assure the complete assimulation of *all textile articles* within the textile provisions of the proposed revised tariff schedules, provision has uniformly been made throughout such revised schedules for articles of textile materials other than vegetable fibers, wool, silk, and manmade fibers [Italic added].

Headnote 1, schedule 3, provides additional impetus to the theory that virtually all textile products were intended to be classified under the provisions contained in schedule 3. That headnote lists specified classes of merchandise that are not classifiable in schedule 3, leaving the strong implication that all other textile products were intended to be classified in schedule 3. To accomplish this, a broad interpretation of the word "articles" in subpart 7B, schedule 3, which contains the provisions covering articles of textile materials not specially provided for, would be required. The fact that the word "articles" may have different meanings in different places in the tariff schedules, depending on the context used, is a judicially accepted concept. See *United States* v. *A. Johnson & Co. Inc.*, —— CCPA, ——, C.A.D. 1218 (1978).

If the intention of the drafters of the tariff schedules is not carried out by giving a comprehensive interpretation to the word "articles" in subpart 7B, fabrics that have been cut to specific sizes for specific purposes, but which have not been so far processed that their identity has changed (such as unhemmed squares of cloth used to ball the roots of trees and shrubs) would be precluded from being classified in schedule 3 since such fabrics are not (1) "in the piece" (as required by headnote 1, part 3, and headnote 1, subpart A, part 4;) (2) identifiable as specific articles of commerce (as required by *Harding* and other cases cited above); or (3) commercially dedicated to a single use (as required by *Snow's U.S. Sample Express and Avins Industrial Products, supra*).

Holding.—Following the judicial precedents and the language of the tariff schedules, the subject merchandise is classifiable under the provision for other articles, not specially provided for, not ornamented of manmade fibers, in item 389.62, TSUS.

Effect on prior rulings.—(1) In headquarters ruling letter 060295, dated June 8, 1979, the Customs Service ruled that the "male" half of a fabric closure having mushroom-shaped projections on one surface, was classifiable under the provision for narrow fabrics, of manmade fibers, in item 347.70, TSUS. The holding in that ruling is correct and is not in conflict with the principles expressed above.

There, the fabric had not been processed to a point where its character and identity has been changed from that of a narrow fabric. Further, it did not fall within the holdings of the *Buss* and *Oppenheimer* cases, *supra*, since the closure fabric had no lines of demarcation or cutting lines to keep it from being fabric in the piece. However, to avoid any possible appearance of a conflict in the wording of that ruling with the instant ruling, pursuant to section 177.9(d), Customs Regulations, ruling letter 060295 is hereby modified as follows:

> (1) Paragraph 5 of the law and analysis portion of the ruling is changed to read as follows:
>
> > In the instant case, the identity of the final article into which the merchandise will be made has not been fixed with certainty and the merchandise has not been processed to the stage where it has ceased to have the name or character of a "narrow fabric."
>
> (2) Paragraph 6 of the law and analysis portion of the ruling is deleted.

(2) T.D. 75–90 limited the application of *Keystone Casing Supply, Inc.* v. *United States*, 72 Cust. Ct. 241, C.D. 4545 (1974). In that case, one kind of merchandise that was before the court consisted of a net fabric made on a single bar knitting machine. After knitting, the fabric was folded and seamed on a second machine to form a tubular

netting. The court held that such merchandise was classifiable under the provision for netting in the piece, in item 352.80, TSUS, and not classifiable as an article of netting, not specially provided for, in item 386.05, TSUS.

In T.D. 75–90 it was stated that Customs considered the netting to have been manufactured beyond the first operation, and, therefore, to be classifiable as an article of netting rather than as fabric in the piece. On reconsideration of the matter, and applying the principles set out above, the Customs Service concurs with the holding of the court with respect to the merchandise that was the subject of T.D. 75–90. It does not appear that the seamed tubing lost its character and identity as fabric in the piece by reason of the seaming operation. Therefore, we concur with the full holding of the court in the *Keystone* case and, pursuant to section 177.9(d), Customs Regulations, T.D. 75–90 is hereby revoked.

(C.S.D. 80–154)

Prohibited and Restricted Importations: Solid Molded Golf Balls; Patent Infringement

Date: November 2, 1979
File: PAT-3-R:E:E
710641 MC
711461 MC

This ruling concerns the exclusion order issued pursuant to the findings of an International Trade Commission investigation, "In the Matter of Certain Molded Golf Balls," Investigation No. 337–TA–35, prohibiting the importation of certain molded golf balls as infringing a U.S. patent.

Issue.—Whether certain covered golf balls are within the scope of the ITC exclusion order such that their importation should be prohibited.

Facts.—The golf balls in question have a polymeric solid center to which a separate and distinct "surlyn" cover is molded. After the separate operations of forming the center and applying the cover, the balls are then painted. Golf balls of this nature have been domestically mass produced and sold in the United States since 1969 without any question being raised as to patent infringement.

On March 22, 1979, a shipment of these golf balls was entered at a U.S. port. Pursuant to message 6283 (RES–1–O:D:C SJH) of July 7, 1978, the balls were analyzed for possible infringement of U.S. Patent No. 3,313,545. Based upon exhibit T attached to the

ITC exclusion order of investigation No. 337–TA–35, entitled "In the Matter of Certain Molded Golf Balls," a laboratory analysis was conducted which concluded that the golf balls in question here should be excluded as infringing Patent No. 3,313,545. This determination of April 17, 1979, was appealed to headquarters.

Law and analysis.—Section 337 of the Tariff Act of 1930, as amended (19 U.S.C. 1337), authorizes the International Trade Commission in certain circumstances involving unfair competition to issue exclusion orders prohibiting the importation of certain goods into the United States. Once such a determination has been made, the Customs Service enforces the prohibition pursuant to section 12.39 of the Customs Regulations (19 CFR 12.39).

ITC Determination and Exclusion Order No. 337–TA–35, concerning certain molded golf balls covered by U.S. Patent No. 3,313,545, directed that infringing balls be denied entry into the United States. Attached to the Commission determination and action was an "Infringement Test Procedure" apparently intended to be used in determining whether or not an imported golf ball infringed upon the patent. This procedure apparently originated as exhibit T of an amended complaint during the ITC investigation. Exhibit T states that the "analysis consists of cutting the golf ball in half to ascertain that the golf ball is a solid molded golf ball or a ball the majority of which is comprised of a solid molded center." Such a procedure was employed by Customs laboratories and was the basis for the exclusion determination.

ITC Exclusion Order No. 337–TA–35 was based upon claim 1 of U.S. Patent No. 3,313,545, described by the ITC as the broadest claim. Claim 1 concerns a "homogeneous molded golf ball * * * predominantly composed of a filled elastomer." In addition, the patent is quite specific in its description of

> the production of the homogeneous molded golf ball in accordance with (this) invention: The molding is effected in mating precision hemisphere molds or dies whose molding surface is covered with multiple regular projections to give the molded ball a conventional dimpled or waffled appearance * * * . The molding is a simple, straightforward operation * * * . After the molding, the ball is removed from the mold and * * * (after being) painted and marked, is then ready for marketing and use.

No mention is made of a separate covering operation because the ball is a solid molded golf ball. We have been informally advised by the ITC that paragraph 14 of the original complaint states that there are two types of golf balls, wound balls and molded balls which are either painted or covered and then painted. However, covered balls are not mentioned in the patent and the entire question of covered balls apparently did not arise during the ITC investigation. Thus, although

the patent owner sought protection against all molded golf balls, nonhomogeneous balls cannot be construed to be covered under the patent.

The golf ball in question here is not homogeneous. While the cores of both balls may be somewhat similar, the core in question is much smaller and a separate and distinct cover is applied in a separate operation. Without that cover, the core would not be a satisfactory golf ball. In addition, the distinct cover is comprised of an entirely different, separately patented (U.S. Patent No. 3,819,768) material. Basically, while the patented ball is a one-piece homogeneous ball, the one in question is a two-piece nonhomogeneous golf ball.

As mentioned, claim 1 described a ball "predominantly composed of a filled elastomer." By contrast, the elastomer center of the two-piece ball cannot be construed to predominate. First, the volume of the core is 28.57 ml. Thus the cover is nearly 30 percent of the volume of the entire ball. Second, the cover is about one-tenth of an inch thick while the paint on the patented ball is only two one-thousandth of an inch in thickness. Finally, it is the patented "surlyn" cover which gives the golf ball its distinct characteristics. Being neither homogeneous nor a predominantly filled elastomer, it is our opinion that the covered two-piece golf ball does not infringe Patent No. 3,313,545.

However, based upon a literal reading of exhibit T, it may still appear that the balls are excludable. The issue to be resolved is whether the exhibit or the language of the patent itself should control.

It is our understanding that exhibit T, submitted by the patent owner with his amended complaint, was intended to provide technical procedures and reference data for the analysis of golf balls which may infringe the patent.

Exhibit T was not included in the body of the ITC's determination and was not separately adjudicated. It was simply added to the order in the original form as it appeared in an appendix to an amended complaint. The statement referring to "a ball the majority of which is comprised of a solid molded center" goes beyond the claim of the patent. Accordingly, the exhibit should not be entitled to greater weight than the language of the patent itself.

Holding.—While exhibit T is the correct testing procedure to be employed during an initial determination as to whether a golf ball infringes Patent No. 3,313,545, the actual language of the patent limits the scope of the exclusion order. Separately covered two-piece golf balls of the nature of the herein described variety do not infringe the patent and should not be excluded.

(C.S.D. 80–155)

Conditionally Free Merchandise: Foreign-Made Motion Picture Films Rented to a Foreign Firm and Returned

Date: November 7, 1979
File: BAG–5–08 R:E:E
711263 M

This ruling concerns whether foreign-made motion picture films rented to a foreign firm for its use may be entitled to duty-free entry upon their return under section 10.68, Customs Regulations.

Issue.—Is a U.S. firm in the business of renting films to a foreign firm for the latter's use abroad entitled to duty-free entry under section 10.68, Customs Regulations, when the foreign-made films are returned to it?

Facts.—A U.S. firm is involved in the business of renting motion picture films to theaters and other organizations in the United States and abroad. Some of the films are foreign-made films on which duty was paid on their initial importation into the United States. Before sending the films abroad, the firm registers them on Customs form 4455. When the films are returned to the United States, the U.S. firm attempts to clear the films under the duty-free provision of section 10.68 of the Customs Regulations.

The District Director contends that the duty-free provision of section 10.68, Customs Regulations, is not available in this instance because:

(1) ORR Ruling 75–0134, in interpreting section 10.68, states that "* * * the tools of trade provision contemplates action by or for the account of an individual, rather than a business activity," and

(2) Section 10.68 refers to articles "taken abroad" and the District Director believes that this provision would apply to items, accompanied or unaccompanied, but which would be used abroad by the U.S. individual abroad, and would therefore not apply to the case of films being rented or loaned from one business activity to another.

Law and analysis.—Section 10.68 of the Customs Regulations provides in pertinent part, that motion picture films taken abroad may be returned without the payment of duty provided that prior to exportation the articles are registered on Customs form 4455 which is filed with Customs. When the merchandise is returned the presentation of the duplicate copy of Customs form 4455 and the declaration on Customs form 3299, in lieu of an entry, would be sufficient documentation to clear the articles.

Item 810.20, Tariff Schedules of the United States (TSUS), provides that professional books, implements, instruments, and tools

of trade, occupation, or employment, imported by or for the account of any person arriving in the United States from a foreign country may be entered free of duty, provided such articles were taken abroad by him or for his account. This provision would be considered broad enough to cover motion picture films.

Item 810.20, TSUS, is categorized by the tariff schedules as a personal exemption and, therefore, requires that the action be done by or for the account of an individual, rather than a business activity. ORR Ruling 75-0134 states that: "Therefore, the tools of trade must be taken out and returned either by the employee or for his account, and not in the name of the company." We have ruled that item 810.20, TSUS, is not concerned with the ownership of such articles but is concerned with whether such articles are taken out and returned by or for the account of an individual. Therefore, such articles mentioned in section 10.68, Customs Regulations, owned by a corporation, could be entitled to duty-free treatment under item 810.20, TSUS, if they were taken out and returned by or for the account of an employee of the corporation.

We do not believe that the term "taken abroad" mentioned in item 810.20, TSUS and section 10.68, Customs Regulations, precludes a rental or loan situation. If it were the intention of Congress to limit this provision to articles actually used by the individual by or for whose account the articles were taken out, we believe that there would have been a limiting provision, similar to the one in item 810.10, TSUS, to the effect that the articles must have been "actually used abroad by him * * *, and not intended for any other person, or for sale." Since item 810.20, TSUS, and section 10.68, Customs Regulations, do not contain the above limiting provision, we believe that section 10.68 would apply to the case of films being rented or loaned to a foreign business activity. However, although the individual by whom or for whom the article was taken abroad need not physically use the article himself, he must be absent from the United States at least during some portion of the time when the articles were outside of the United States.

In lieu of the declaration on Customs form 3299, the importer may file an informal entry on Customs form 5119-A (see sec. 143.23, Customs Regulations).

Holding.—If the films are taken out by or for the account of an employee of the corporation and the employee is absent from the United States during some portion of the time when the films were outside of this country, the films may be brought back and entered under the duty-free provision of item 810.20, TSUS, as implemented by section 10.68 of the Customs Regulations, even though the films are rented to another business entity for its use in the foreign country.

If the films are merely sent abroad and returned, however, they are subject to duty upon their reimportation.

(C.S.D. 80-156)

Drawback: Schedules (Formulas); Stock-in-Process; Nonspecification Merchandise

Date: November 7, 1979
File: DRA-1-09-R:CD:D B
210851

Issues.—(1) May formulas which account for irrecoverable waste and overweight percentages be used to determine the amount of a designated product used in the production of exported articles?

(2) May small percentages of a final product which are broken, too large, or too small, and therefore cannot be wrapped and exported, be reintroduced into production as a stock-in-process?

(3) May drawback be claimed on a portion of the foregoing product set out in (2), which cannot be reintroduced, and must be exported unwrapped?

(4) Is taste a criterion for determining same kind and quality for cocoa butter obtained from cocoa beans by the expeller method and cocoa butter obtained from cocoa beans by the press method, when both butters meet FDA and industry standards for use in production?

Facts.—Prior to submitting a drawback proposal, a large manufacturer of candy bars has raised the above issues based on the following:

The manufacturer imports chocolate crumb (a mixture of cocoa, sugar, and milk) as well as cocoa butter which is produced from African cocoa beans by means of the centrifugal or expeller method. These materials are used along with domestic chocolate crumb and cocoa butter in the production of candy bars.

During production, an average of 1 percent by weight of those ingredients is contaminated and lost as an irrecoverable waste. Additionally, the finished candy bars may be over or under the target weight for each chocolate bar. So an average weight discrepancy is factored into production formulas as is the average waste figure. The manufacturer wishes to use these formulas as bases for determining the amounts of designated (imported) and domestic merchandise used in the exported product for computing the drawback due.

The processing also results in a small percentage of bars which are too large or small or broken and cannot be wrapped. This merchandise is known as "rework" and, with one exception, is introduced into

the manufacturing process. No drawback will be claimed on this rework until it is reprocessed into finished products and is exported. The manufacturer asks if this treatment is acceptable to Customs.

The exception to the rework procedure is one particular bar which cannot be placed back into the process and is exported unwrapped. These unwrapped bars have a drawback value, equal by weight, to the packaged products and the manufacturer wishes to claim drawback on them.

Finally, the manufacturer has submitted specifications for the expeller and press cocoa butters, stating that they are totally interchangeable. The manufacturer states that the same quality bar results using either butter and the purchaser of the bar could not tell the difference in taste.

LAW AND ANALYSIS.—(1) Section 22.5, Customs Regulations, provides in pertinent parts of relative subsections:

> (a) * * * (T)he records of the manufacturer or producer shall show (1) The quantity, identity, kind, and quality of the duty-paid merchandise or of other articles manufactured or produced under drawback regulations * * * designated as the basis for the allowance of drawback on the exported articles; * * * (6) The quantity of merchandise of the same kind and quality as designated merchandise, used in the manufacture or production of the exported articles.

Schedules (formulas) may be used to determine the amount of merchandise of the same kind and quality used to produce the exported articles. However, the schedule may not give an average amount but must give the minimum amount of the same kind and quality merchandise used to produce, or appearing in, a unit of the product. For example, if two units were exported and 100 pounds of cocoa was used to produce one unit and 102 pounds to produce another unit, the schedule must state that 100 pounds of cocoa butter was used to produce each unit. An average of 101 pounds would not be acceptable.

Those nonspecification bars which are reintroduced into production constitute a stock-in-process. This reintroduction may be done, but it may require a modification of the formulas.

Also, drawback would be allowable on the overweight and/or broken bars which are exported unwrapped, but the applicant must prove the amount of designated butter in the exported product, or be limited to the lowest possible amount of butter.

(2) A drawback statement (proposal) may be approved under 19 U.S.C. 1313(b) only if the designated (imported) and domestic materials are of the same kind and quality. "Same kind and quality" does not require that two substances be identical. What is required is that the two substances may be used interchangeably to manufacture or

produce the same type and quality of exported articles without significant change in the manufacturing process.

In this case, we are dealing with cocoa butters, one imported, the other domestic, which are chemically the same except for two minor variances—microbiological plate count and amount of shell and/or germ fat. According to a representative of the Food and Drug Administration, which incidentally has set no standards for cocoa butter, these variances are insignificant. Government (FDA) and industry standards relate only to amounts of cocoa fat (butter) which must appear in different types of chocolate, chocolate liqueur, cocoa, etc.

Thus, the applicant in the instant case may use either cocoa butter without regard to its origin and still meet Government and industry standards for its products. Use of one cocoa butter or the other, or a combination of the two, does not require any changes in the manufacturing process.

Holdings.—(1) Formulas based on total weight of product produced and which contain waste and off-weight factors may be used to determine the amount of designated or domestic material used in production. The formulas must show the minimum amount of same kind and quality merchandise used to produce, or appearing in, a unit of exported product.

(2) Small percentages of a final product which do not meet specifications are considered stock-in-process and may be reintroduced as such into the manufacturing process. Accurate records of stock-in-process must be kept, if drawback is based on a "used in, less valuable waste," or a "used in" basis, and if necessary, the formulas must be modified.

(3) Drawback may be claimed on exported nonspecification merchandise, if such merchandise is listed in the drawback proposal's "Exported Articles on Which Drawback Will Be Claimed" section.

(4) In this case it is not necessary to use taste as a criterion to determine same kind and quality between cocoa butter obtained by the expeller method and cocoa butter obtained by the press method since the specifications for the two butters are sufficient to determine same kind and quality.

(C.S.D. 80-157)

Value: Assists; Dutiability of Design Information in the Public Domain

Date: November 13, 1979
File: R:CV:V JV
061468

This is in response to a request for internal advice concerning the dutiability of clothing design assists furnished to more than one overseas manufacturer.

Issue.—Whether it is proper to assess duty on the full value of a design assist where the style for such design has been previously marketed and is therefore available in the public domain for copying?

Facts.—The involved importers are divisions of a large multinational corporation headquartered in the United States. They are engaged in the importation and wholesale distribution in the United States of men's and women's sportswear. Prior to December 1976, importations were almost exclusively limited to sportswear produced by several unrelated Hong Kong manufacturers. The design information provided them by the importers was derived primarily from samples of similar type garments contemporaneously selling in other foreign markets. More recently, however, such information has been developed using the importers' multiple resources, including the services of their newly established design department. Although such design information is still derived primarily from samples coupled with observations of styling concepts and trends, the information gleaned therefrom is generally turned over to their design department for analysis, interpretation, and the embodiment of new designs. Today, they import sportswear from Singapore, Taiwan, Korea, the Philippines, and other Pacific rim countries. Just as before, designs for any given style are furnished to more than one foreign manufacturer, except that now, the different manufacturers are situated in different countries. Neither the designs nor the styles produced and marketed therefrom are protected by patent or copyright.

Law and analysis.—It has long been the policy of Customs, subject to certain limitations, that a design assist used in the production of imported merchandise will be dutiable in full each and every time it is furnished to a different overseas manufacturer in the same or different country (I.A. 341/75). Counsel for the importers takes exception with this policy, arguing that it is proper to assess duty on the full cost of developing a design for a given style only upon the initial fabrication or shipment of that style, not each time that style is fabricated by

different producers in the same or different countries. It postulates once a particular style reaches the marketplace the style information embodied in the design becomes part of the public domain and, as a consequence, cannot thereafter constitute a dutiable assist. Cited as authority is T.D. 78–337.

T.D. 78–337 involves the dutiability of research and development (R. & D.) which was formulated in 1946 and then, after being used for 28 years in the domestic market, was furnished to an overseas producer of imported merchandise. The R. & D. was covered by both a patent and copyright. The patent expired in 1963 and was not renewed. The copyright, having an effective life of 50 years, remained in force. That portion of the R. & D. not protected by the patent was ruled not to be a dutiable assist on the grounds that it constituted knowledge in the public domain (freely available to any interested person for inspection and copying). On the other hand, that portion of the R. & D. which remained under copyright was held to be dutiable at its full value because it did not constitute information in the public domain.

In Headquarters letter 541405 SPK, dated April 12, 1977, certain highway bridge design plans formulated by the State of California and adopted as standard specifications by the Federal Highway Administration were held to be dutiable only at their cost of reproduction. Our determination centered on the fact that, unlike research, development, and design information held in a patented or proprietary capacity, the designs under consideration constituted knowledge in the public domain. The controlling factor was not that the original cost or value of the data had been nullified by the initial production of the imported bridge structures or that the data was no longer essential to their production, but that any interested person, including a foreign manufacturer, could, if he so desired, obtain the information without incurring any cost over and above the administrative cost of reproduction. In effect, once these designs became freely available for inspection and copying, their value for duty purposes upon subsequent use by a different manufacturer became nugatory. By the same token, had the designs not been made freely available, they would have been dutied at their full cost of development.

You indicate that there has been no factual evidence presented to date which would substantiate that either the book of styles and designs (replete with the design information typified by the items portrayed in the book) or individual designs developed for use by the involved importers have been made freely available. This, plus the control exercised over the designs by them precludes, in your opinion, their being part of the public domain.

In the case of wearing apparel unprotected by patent or copyright, it matters not that the design itself is not freely available for inspection or copying. Once a particular style is marketed and can readily be purchased off the rack and copied and reproduced by competitors or other interested persons with no adverse legal consequences, the furnishing of the information embodied in the design to different manufacturers would not, in our view, constitute a dutiable assist. In essence, the marketing of the garment reproduced from the design signifies that the holder of the assist has relinquished control over the information contained therein, which he can no longer sell on the open market. Consequently, such a method of marketing would place the design in the public domain and, as a consequence, render its value nominal for duty purposes.

Based on the foregoing, we conclude that the subject designs, including the styles produced and marketed therefrom, constitute assists in the public domain.

Holding.—It is improper to assess duty on the full value of a clothing design assist unprotected by patent or copyright where the style for such design has been previously marketed and, therefore, is available in the public domain for copying. This is so regardless of whether the design itself becomes freely available.

(C.S.D. 80–158)

Classification: Thermal Underwear Tops; Chief Use, General Headnote 10(e)(i), TSUS

Date: November 18, 1979
File: CLA-2:R:CV:MC
060861 PR

This ruling concerns the tariff classification of thermal underwear.

Issue.—The issue presented is whether thermal underwear tops are classifiable under the provisions for underwear or under the provisions for other wearing apparel. While not directly presented, a related issue is whether thermal underwear tops and bottoms, when imported together, are classifiable as entireties.

Facts.—The submitted sample is a crew-neck long-sleeve pullover. It is packaged in a clear plastic container which contains a picture of a man wearing the packaged shirt with a pair of long underpants. The package is labeled to be "Men's Heavy Weight Thermal Underwear." The labeling also indicates that the garment is 67 percent cotton and 33 percent polyester. The sample is knitted in a ribbed or waffle pattern.

In an effort to determine if an established and uniform practice of classification is applicable to the instant merchandise, this office requested information from 20 district directors and 2 area directors concerning their classification practices with respect to the instant merchandise and similar merchandise.

The reports received clearly showed that no uniform and established practice of classification was applicable to this merchandise. Some district (area) directors reported that they uniformly classified the instant merchandise as underwear while other district (area) directors reported that they uniformly classified the same merchandise under the provisions for other wearing apparel. Likewise, the reports differed markedly on the question of classification of thermal underwear tops and bottoms as entireties—some districts (areas) reporting that when the tops and bottoms were imported together they were classified as entireties (either as underwear or under the provisions for other wearing apparel) while other district (area) directors reported that when they were imported together they were separately classifiable with the tops being classified under the provisions for other wearing apparel while the bottoms were classified as underwear.

Based on the reports, it appears that a substantial amount, if not the majority of the thermal underwear tops and thermal underwear bottoms, are imported separately. From a visit to some of the local stores in the Washington metropolitan area, it appears, at least in this area, that thermal underwear tops and thermal underwear bottoms are more often than not packaged and sold separately.

Law and analyses.—The provisions for textile underwear are found in subpart 6E, schedule 3, Tariff Schedules of the United States (TSUS). Headnote 1 to that subpart states that the subpart covers only underwear not specially provided for, of textile materials.

No definition of the term "underwear" is found any place in the tariff schedules nor have the courts adopted or approved any particular definition of that term. In the case of *Max M. Myres* v. *United States*, 9 Treas. Dec. 298, T.D. 26085 (1905), the Board of General Appraisers held that underwear was wearing apparel which was intended to be worn underneath the clothes, but which was not required to be worn next to the skin. In *Childrens Hose, Inc.* v. *United States*, 55 Cust. Ct. 6, C.D. 2547 (1965), the court ruled that nylon tights or leotards which were designed to be at least partially utilized under an outer garment and partially exposed, were not underwear:

> * * * the court may take judicial notice of the fact that leotards or tights whether worn by children or women are designed to be at least partially utilized under an outergarment and

partially exposed, depending on the age of the wearer and the purpose for which they are worn.

It would, therefore, seem that if a portion of this imported merchandise is underwear, a portion of it is not underwear. By the same token, while the exposed portion may be outerwear, the portion concealed would not be outerwear. Therefore, the articles at bar are more than underwear and more than outerwear. They are, therefore, in fact neither fish nor fowl. (At pp. 9, 10.)

It is evident, although not expressed, from the decision in *Children's Hose*, that the provisions for underwear are, in fact, use provisions. In *Admiral Craft Equipment Corp.* v. *United States*, —— Cust. Ct. ——, C.D. 4796 (1979), the court specifically stated that a provision for wearing apparel is a classification by use. Underwear is a type of wearing apparel and, following *Children's Hose*, since the classification of garments under the underwear provisions depends on how those garments are used, the provisions for underwear are no less use provisions than are the provisions which specifically provide for "wearing apparel."

In accordance with general headnote 10(e)(i), TSUS, where a tariff classification is controlled by use, other than by actual use, that use will be determined in accordance with the chief use of the class or kind of merchandise to which the imported articles belong at, or immediately prior to, the date of importation. The term "chief use" is stated in that headnote to mean the use which exceeds all other uses combined.

Where the classification of merchandise is dependent on the chief use of that merchandise, there must be proof of such use. *Advance Solvents & Chemical Corp.* v. *United States*, 34 CCPA 148, at 151, C.A.D. 358 (1947).

In determining the chief use of an article, the manner in which that article is merchandised is a consideration. *Russ Berrie & Co.*, v. *United States*, 76 Cust. Ct. 218, C.D. 4659 (1976). Other factors that can be considered are the construction and the nature of the article itself, the contents of any printed matter which is generally distributed with the article, and the type of trade to which the article is sold. *Inter-Maritime Forwarding Co. Inc.* v. *United States*, 59 Cust. Ct. 412, C.D. 3177 (1967). The characteristics of the merchandise itself may be considered, *United States* v. *Colibri Lighters (U.S.A.) Inc.* 47 CCPA 106, C.A.D. 739 (1960), and it has even been held that the presumption of correctness which attaches to Customs classification of merchandise may be overcome by the probative effect of the samples themselves. *United States* v. *Bruce Duncan Co., Inc.* v. *United States*, 50 CCPA 43, C.A.D. 817 (1963); *United States* v. *New York Merchandise Co., Inc.*, 58 CCPA 53, C.A.D. 1004 (1970). Thus, where evidence

as to actual use is limited, the character and design of the sample itself may compel a finding as to the primary use of the merchandise. *Leaf Brands, Inc.* v. *United States*, 70 Cust. Ct. 66, C.D. 4409 (1973); *Oxford International Corp.* v. *United States*, 70 Cust. Ct. 217, C.D. 4433 (1973). Adaptability, adequacy, or susceptibility of use has little, if any, probative value. *Bob Stone Cordage Co.* v. *United States*, 51 CCPA 60, C.A.D. 838 (1964).

Since the subject inquiry was presented by another division in the Customs Service headquarters in order to ascertain the quota status of this merchandise, information that might normally be submitted by an importer to the Customs Service to establish chief use is not available. However, the manner of packaging strongly indicates that the merchandise is intended for sale as underwear. Further, based on the construction and appearance of the sample, it belongs to a class of goods generally known as thermal underwear. It is recognized that the submitted sample is not only capable of being worn without other clothing on top of it but is, on occasion, so worn. When viewing the sample, it is clear that such use is incidental to use of the merchandise as underwear.

Even if the use of the garments as outerwear is more than incidental, it would not effect our determination that the merchandise is classifiable as underwear since there is no evidence of which we are aware that thermal underwear, as a class of merchandise, is not chiefly used as underwear.

Having determined that the instant merchandise constitutes underwear for tariff purposes, the question of whether the submitted sample would be classified as an entirety if imported with a matching bottom may be moot. However, since the question has arisen, we believe that it should be resolved.

Legal determination No. 79–283, issued August 29, 1979, which circulated headquarters ruling letter 059722, dated April 13, 1979, contains the following statement of the views of the Customs Service in regard to the classification of wearing apparel sets as entireties.

> Accordingly, in the absence of an established and uniform practice to the contrary, the Customs Service will usually classify wearing apparel sets as entireties, if (1) the components are coordinated as to color to the extent that it is obvious that those components were designed and intended to be worn together; (2) the components of the set are sold as a unit and not separately; and (3) the components, when joined together, form a new article which processes a character or use different from that of its parts, or one of the components in the set is so predominant that the other components are merely incidental to that predominant component.

Applying that criteria to sets of thermal underwear, it appears that those sets should not be classified as entireties for tariff purposes because a substantial volume of those components are sold as separates.

Holding.—It is the determination of the Customs Service, that garments which are advertised, labeled, and sold as thermal underwear, will, in the absence of evidence to the contrary, be considered to belong to a class of merchandise that is chiefly used as underwear and, therefore, are classifiable as such.

Effect on prior rulings.—Any prior administrative rulings by the Customs Service which are in conflict with the principles and holding of this ruling are hereby revoked if (1) the merchandise involved is not the subject of an established and uniform practice of classification, or (2) the merchandise involved is the subject of an established and uniform practice of classification, but the change in classification that would result from applying the principles and holding of this ruling will not cause the merchandise to be subject to a higher rate of duty than is presently applicable.

(C.S.D. 80–159)

Prohibited and Restricted Importations: Combination Pen and Penholder; Trademark Infringement

Date: November 19, 1979
File: TMK-3-RRUEE
711677 SO

This ruling concerns the applicability of the prohibition set forth in section 526, Tariff Act of 1930, as amended (19 U.S.C. 1526), against the importation into the United States of merchandise of foreign manufacture bearing an American trademark.

Issue.—Would the importation of a combination pen and penholder bearing the description on the package in large yellow letters, "Stretch-Cord Ballpoint Pen," infringe upon the rights of the owner of the registered trademark, "Stretch-a-Pen," for combination pen and penholders.

Facts.—An importation of combination pen and penholders packaged in plastic bubble display cards bearing the description in large yellow letters, "Stretch-Cord Ballpoint Pen," is contemplated. The importer has asked for a ruling on whether the importation of these combination pen and penholders bearing the description referred to above would infringe upon the registered trademark, "Stretch-a-Pen," which has been recorded with Customs for import protection by the trademark owner, Norbert Specialty Corp. (New York corporation).

The importer noted that their item has no brand name, only a description of the article, and expressed the opinion that the description is not sufficiently similar to "Stretch-a-Pen" to be confusing to the consumer. A sample of the imported article was submitted.

Law and Analysis.—Section 526 of the Tariff Act of 1930, as amended (19 U.S.C. 1526), prohibits the importation into the United States of any merchandise of foreign manufacture bearing a trademark owned by a corporation created or organized within the United States, provided a copy of such trademark registration is filed with the Secretary of the Treasury and recorded in the manner provided by regulations (19 CFR 133.1–133.7).

Infringement of federally registered marks is governed by the test of whether defendant's use is likely to cause confusion, or to cause mistake, or to deceive. Descriptive words such as "stretch" have little trademark significance and will not be regarded as the dominant portion of the mark, because such words may be used by everyone. While it is true that marks must be considered in their entireties, it is well settled that no one can appropriate as a trademark a generic name or one descriptive of an article of trade, its qualities, ingredients, or characteristics. It is evident that the suffixes "a-Pen" and "Cord Ballpoint Pen" neither look nor sound alike. We are of the opinion that, under the normal test applicable to unsophisticated buyers of a product at retail, there would be little likelihood of confusion.

Holding.—Entry of the imported article known as "Stretch-Cord Ballpoint Pen" would not be prohibited as infringing on the registered trademark "Stretch-a-Pen."

(C.S.D. 80–160)

Drawback: Certificate of Delivery Requirements; Section 22.15 (a) and (b), Customs Regulations

Date: November 19, 1979
File: DRA-1-09-R:CD:D B
211088

Issue.—Must a buying agent or middleman who does not have actual possession of imported merchandise or receive title thereto file a certificate of delivery for that merchandise as set out in sections 22.15 (a) and (b) of the regulations, if such certification is not necessary to trace continuity of possession from importer to manufacturer?

Facts.—Certain boxcars which have been exported and upon which drawback will be claimed were manufactured by company A. The

steel used was imported by company B which has provided six certificates of delivery (Customs form 7543) attesting to the delivery of the steel to company A. Middleman C, a buyer of steel, located the steel in possession of B, and informed A who purchased the steel through C. That intermediary then took his commission from the sale price and instructed B to deliver the steel to A. C did not take actual possession of or receive title to the steel.

Law and analysis.—The applicable regulations provide:

> *Section 22.15(a).* When the merchandise used in the manufacture of the exported articles was not imported by the manufacturer of the articles, no drawback shall be allowed until there has been filed with the District Director at the port where the drawback entry is filed a certificate of delivery in duplicate on Customs form 7543 or official evidence of the existence of such a certificate filed at another port, fully describing the merchandise delivered and tracing it from the custody of the manufacturer. * * *
>
> *Section 22.15(b).* If the merchandise was not delivered directly from the importer to the manufacturer, each intermediate transfer shall be shown on the certificate of delivery by a certificate of the person through whose possession the merchandise passed.

The reason for these regulations is clear. Customs has to know that the merchandise designated under 1313(b) or actually used to manufacture or produce the exported articles under 1313(a) is in fact the merchandise designated or used. This insures that the same merchandise will not be used as a basis for drawback more than once.

It is clear that a certificate of delivery must be executed by each person (or business entity) in the chain of possession of the merchandise before an exporter may obtain drawback. Any person who executes a certificate of delivery must have personal knowledge of the facts attested, whether the facts are known firsthand or knowledge thereof was obtained by other methods.

The question here is whether intermediary C was a "person through whose possession the merchandise passed."

For purposes of the applicable regulations, "possession" is such control over the merchandise in question that certification of delivery by a particular person (or business entity) is mandatory to trace the continuity from importer to manufacturer.

We have previously closely scrutinized the situations of parties in a drawback transaction to determine whether a bona fide principal/agent relationship existed, or whether the relationship was created by the parties merely to produce a climate for the allowance of drawback. However, it is irrelevant for purposes of this decision whether C is an agent of either A or B. As a matter of fact, it appears that C was and is an individual entrepreneur. The middleman in this instance

can certify nothing more than that he paid B for the steel and instructed that company to forward it to A, the buyer/manufacturer. The only entity which can certify actual delivery of the steel is B, the importer, and B has done so in this instance. By B's firsthand certification, Customs personnel can trace the steel from the importer to the manufacturer, which satisfies the intent of the regulations.

Should C be required to file the certificate, he or she could only inquire of B as to whether the steel had been delivered to A. This step would be superfluous for practical purposes, as well as contrary to the best evidence rule.

Holding.—Certificates of delivery are required only when necessary to trace the continuity of possession of merchandise from importer to manufacturer.

(C.S.D. 80-161)

Temporary Importation Under Bond (TIB) Entry: Whether a TIB Entry May Be Substituted for a Trade Fair Entry

Date: July 16, 1980
File: CON-1-RRUCDB
211775 L

Issue.—May an article entered for a trade fair pursuant to part 147, Customs Regulations (19 CFR 147) subsequently be admitted free of duty under bond?

Facts.

A customhouse broker asks whether a temporary importation under bond (TIB) entry may be made after the close of a trade fair to replace a trade fair entry.

Law and analysis.—Articles admitted temporarily free of duty under bond are provided for in schedule 8, part 5, subpart C, Tariff Schedules of the United States (TSUS). Headnote 1(a) to subpart C provides in part that:

> The articles described in the provisions of this subpart, *where not imported for sale or for sale on approval*, may be admitted into the United States without the payment of duty, under bond for their exportation within 1 year from the date of *importation*. * * * [Italic added.]

Section 147.42(a), Customs Regulations (19 CFR 147.42(a)), provides in part that:

> Any article entered for a fair * * * may be entered for consumption, for warehouse, or under any other provision of the Customs laws, or for another fair, or may be transferred to other

> Customs custody status or to a foreign-trade zone * * * at any time before, or within 3 months after, the closing date of the fair.

Although section 147.42(a), Customs Regulations, provides that an article entered for a fair may be entered "under any other provision of the Customs laws", headnote 1(a) to schedule 8, part 5, subpart C, TSUS, a statutory provision, requires that articles entered under TIB not be imported for sale or for sale on approval. In addition, there must be the intent, at time of importation, that they be exported or destroyed under Customs supervision within the statutory time period.

Since the statutory time period for articles entered under the TIB provision begins to run at time of importation and not at the time the TIB entry is accepted, and since articles entered under a trade fair entry may be sold and entered into the commerce of the United States, it would not be possible to establish the requisite intent to export or destroy the articles under Customs supervision which is a requirement at the time of importation to qualify for a TIB entry.

Accordingly, a TIB entry may not be substituted for a trade fair entry.

We note further that section 147.2(b), Customs Regulations (19 CFR 147.2(b)) prohibits entry under the trade fair regulations of articles previously imported under TIB. We interpret this provision to relate to the requirement that articles entered under TIB must be exported or destroyed within the statutory period and may not be sold or sold on approval.

Holding.—A TIB entry may not be substituted for a trade fair entry.

(C.S.D. 80-162)

Drawback: Whether Reducing the Degree Brix of Orange Juice Concentrate Is an Approved Manufacturing Process

Date: November 27, 1979
File: DRA-1-RRUCDB NK
211084

Issues.—(1) Whether the blending of water with concentrated orange juice to merely reduce the degree brix of the concentrate is a manufacturing process for drawback purposes and, if so, (2) whether any recourse can be taken on liquidated drawback entries covering such exported merchandise.

Facts.—In a memorandum, the Regional Commissioner of Customs, Miami, referred to two drawback contracts covering the manufacture

of orange juice concentrates with the use of orange juice concentrates and sets forth the following facts:

1. The domestic substituted and imported designated orange concentrates covered by the contracts meet the standard of identity of the Food and Drug Administration and the grade A standard of quality of the U.S. Department of Agriculture for concentrated orange juice for manufacturing (21 CFR 146.153 and 7 CFR 2852.2222);
2. The contracts contain paragraphs that describe many optional manufacturing processes with the use of the conjunctions or and either and those paragraphs may be interpreted as meaning that the blending of water with a concentrate to merely reduce the degree brix of the concentrate is an approved manufacturing process for drawback; and,
3. Drawback entries were liquidated in 1978, covering exported concentrates that were merely reduced in degree brix by the addition of water.

The Regional Commissioner requested advice as to whether drawback is allowable based on the facts submitted and, if not, what recourse can be taken on drawback entries liquidated in 1978.

Law and analysis.—The degree brix of concentrated orange juice for manufacturing as defined in 21 CFR 146.153 may range from 20° to 100°. As a practical matter, imported concentrated orange juice generally ranges in the area of 65° brix. Degree brix is a measurement of the quantity of the soluble solids (sugar) in a concentrate. It is not a measurement of its quality. The grade A quality standard of the U.S. Department of Agriculture for this product (7 CFR 2852.2222) is based on a scoring system for color, defects, and flavor.

An essential requirement of the substituted drawback law (19 U.S.C. 1313(b)), is that the substituted domestic merchandise must be of the "same kind and quality" as the designated imported merchandise. Imported 65° brix concentrate of grade A quality and domestic 50° brix concentrated orange juice of grade A quality would be considered as of the "same kind and quality" for drawback purposes. Although the two concentrates differ in degree brix, they are used interchangeably by the citrus industry in the manufacture of other orange juice products and meet the "same kind and quality" requirement of the drawback law.

Another essential requirement of the substituted drawback law is that the imported and the substituted domestic merhandise must be "used in the manufacture or production" of new articles. To hold that merely reducing the degree brix of a concentrate from 65° to 50° by the addition of water to the concentrate is a manufacturing process for drawback would jeopardize the holding that a concentrate of 65° brix and a concentrate of 50° brix of grade A qualities, are interchangeable and meet the "same kind and quality" requirement of law.

The blending of imported grade A orange juice concentrate of 65° brix with water to reduce the degree brix of the concentrate to 50° does not result in a change in the quality or character of the imported concentrate. The quality score for color, defects, and flavor of the imported 65° brix concentrate is not changed by the addition of water. Nor for that matter, a 50° brix concentrate is no more edible than a 65° brix concentrate. The reduced concentrate of 50° brix would be considered as the "same kind and quality" as another batch of grade A concentrate of 65° brix.

Under section 1514, title 19, United States Code, the liquidation of drawback entries allowing drawback, with certain exceptions not applicable to the submitted facts, become "final and conclusive upon all persons" (including the U.S. Government) within 90 days after the date of liquidation.

Holdings.—(1) The mere blending of water with concentrated orange juice for manufacturing of grade A quality to reduce the degree brix of the concentrate is not a manufacture or production for drawback, and (2) no recourse can be taken in this case to recover drawback allowed on entries liquidated in 1978.

Alternatives.—There are blending operations that may change the character (or quality) and use of grade A concentrated orange juice for manufacturing which also result in reducing the degree brix of the concentrate. Some of the blending operations are with the use of the following:

1. Fresh orange juice;
2. Pasteurized orange juice;
3. Essential oils and flavoring components;
4. Essential oils, flavoring components and water;
5. Essential oils, flavoring components and other orange concentrates; and
6. A combination of any of the above.

(C.S.D. 80-163)

Duty Assessment: Value Requirement for Samples Classifiable in Item 860.30, TSUS

Date: November 28, 1979
File: R:CV:V BS
542025

This is in further reference to your letter of June 15, 1979, on behalf of (client), in which you requested a ruling regarding the classification of certain wearing apparel used for the purpose of

soliciting orders for foreign merchandise, and the valuation of such apparel. Our ruling letter of September 4, 1979, dealt solely with the classification issues involved. This response addresses the value issue raised in your submission.

The issue involved is whether all merchandise meeting the requirements of item 860.30, TSUS, must be valued at $1 or less per unit. The response to this question depends primarily upon the meaning of the term "or" in the statute, as interpreted in light of the legislative history and rules of statutory construction.

> Item 860.30, TSUS, provides duty-free treatment for any sample * * * valued not over $1 each, *or* marked, torn, perforated, or otherwise treated so that it is unsuitable for sale or for use otherwise than as a sample * * *. [Italic added.]

Customs has interpreted this statute as providing a dichotomy between samples valued at $1 or less, and those samples unsuitable for sale due to mutilation but nevertheless valued over $1. (While the samples in either case are subject to appraisement under section 402 or 402a, Tariff Act of 1930, as amended, the appraised value of the samples is irrelevant to their inclusion under item 860.30.)

However, it is your opinion that when read in its entirety, the implication is that a sample which is worth less than $1 or a sample which has been marked, torn, or perforated stand on equal footing, and therefore, the damaged samples should have nominal value and be worth $1 or less. In the alternative, you believe the value of a damaged garment should be equal to the price at which a textile processor would purchase the garment for the purpose of reclamation. In such case, the entered value would be determined by the number of pounds times the current market price for that fiber.

As support for your position, you cite article II of the International Convention to Facilitate the Importation of Commercial Samples and Advertising Material, to which the United States became a signatory on May 28, 1953, and which was implemented by paragraph 1821 of the Tariff Act of 1930, predecessor to item 860.30, TSUS. Article II, entitled "Exemption from import duties for samples of negligible value", provides that:

> Each contracting party shall exempt from import duties samples of goods of all kinds imported into its territory, provided such samples are of negligible value and are only to be used for soliciting orders for goods of the kind represented by the samples with a view to their importation.

Paragraph 1821 of the Tariff Act of 1930, as added by Public Law 85–211 (71 Stat. 486), was approved on August 28, 1957, and provides in pertinent part the following:

> (a) Except as provided in subparagraphs (b), (c), and (d), any sample to be used in the United States only for soliciting orders for products of foreign countries.
>
> (b) Subparagraph (a) shall apply to a sample only if its value does not exceed $1, *except* that this limitation shall not apply to (1) any sample which is marked, torn, perforated, or otherwise treated, in such a manner that such sample is unsuitable for sale or for use otherwise than as a sample, or (2) any sample which is covered by subparagraph (c) or (d). [Italic added.]

It is apparent that paragraph 1821 (and its successor) has gone beyond the prescribed limits of article II of the convention by permitting duty-free entry of mutilated articles, whatever their value. This policy, however, was not new to Customs, as explained in the following pertinent Senate report, discussing paragraph 1821:

> H.R. 5924 would provide for duty-free entry of certain samples to be used in the United States only for soliciting orders for products of foreign countries; the samples that could be so entered would be limited to ones valued at less than $1 each *or* samples that have been mutilated in such ways as to leave them useful only as samples * * *. [Italic added.]
>
> At present, samples, *regardless of value*, are enterable free of duty under bond, the bonds being subject to liquidation upon exportation of the samples so entered. Samples valued at less than $1 each are also presently enterable free of duty under section 321 of the Tariff Act, a provision which authorizes collectors of Customs * * * to admit free of duty articles valued at not more than $1 each. For this reason, *enactment of H.R. 5924 would not in important degree alter the present tariff treatment of samples*. [Italic added.] See Senate Report No. 852, page 1716, United States Code Congressional and Administrative News, vol. 2 (1957).

Accordingly, the legislative history of paragraph 1821 clearly reflects a dichotomy between samples valued at $1 or less, and other samples that have been mutilated. Item 860.30, TSUS, continues this dichotomy, but uses "or" as the disjunctive term rather than the language of paragraph 1821, supra.

Furthermore, we note that the rules of statutory construction require such an interpretation. In the construction of a statute, it is the legislative intent manifested in the statute that is of importance, and such intent must be determined primarily from the language of the statute. See *American Medical Association* v. *United States*, 317 U.S. 519, 63 S. Ct. 326. The "common understood meaning" should be applied to terms employed in the enactment of a statute. See *Re Watkins' Estate (Fla.)*, 75 So. 2d 194, 45 A.L.R. 2d 1360. Thus, the word "or" as used in a statute is a disjunctive term indicating that the various members of the sentence are to be taken separately. See *Senate* v. *Dickens*, 66 Ariz. 86, 183 P. 2d 148.

Accordingly, we find that item 860.30, TSUS, provides for duty-free treatment of samples valued at $1 and under, and also provides similar treatment for mutilated samples valued in excess of $1.

(C.S.D. 80-164)

Classification: Temporary Importation Under Bond; Live Invertebrate Marine Worms Imported for Scientific Research

Date: November 23, 1979
File: RRUCMC
060896 LCS
060400 LCS

This ruling concerns the tariff status of invertebrate marine worms, phylum Sipuncula, from the offshore areas of Canada, Australia, New Zealand, and/or the Caribbean area, specifically Cayman Island, and presumably imported therefrom, for scientific research purposes.

Facts.—Live invertebrate marine worms, phylum Sipuncula, from various offshore areas of the world are to be imported into the United States for scientific research purposes. Once received at the laboratory, these specimens are killed and an unspecified protein is extracted from their tissue for further research.

Issue.—The classification of live invertebrate marine worms imported for scientific research purposes.

Law and analysis.—Live animals other than birds, asses and burros, cattle, foxes, goats, horses and mules, sheep, swine, or turtles, are provided for in item 100.95, Tariff Schedules of the United States (TSUS), dutiable at the reduced column 1 rate of duty of 3.5 percent ad valorem.

Item 852.20, TSUS, provides for the duty-free entry of wild animals (including birds and fish) imported for use, or for sale for use, in any scientific public collection for exhibition for scientific or educational purposes. However, based on the information provided, it is apparent that these marine worms are not intended for inclusion "* * * *in any scientific public collection for exhibition* * * * [italic provided]", albeit obvious that they are to be used "* * * for scientific or educational purposes." Accordingly, since both prerequisite conditions are not herein met, classification in item 852.20, TSUS, is precluded.

Alternatively, item 864.30, TSUS, provides that articles intended solely for testing, experimental, or review purposes, including plans, specifications, drawings, blueprints, photographs, and similar articles for use in connection with experiments or for study may be imported without the payment of duty, under bond for their exportation within 1

year from the date of importation, which 1-year period may be extended at the discretion of the Secretary of the Treasury, upon application, for one or more further periods of time which, when added to the initial 1-year period, shall not exceed a total of 3 years.

Upon satisfactory proof that any article admitted under the provisions of item 864.30, TSUS, has been destroyed because of its use for any purpose within these provisions, the obligation under the bond terms to export such articles shall be deemed to be satisfied.

Holding.—Live marine worms, phylum Sipuncula, intended for scientific research purposes are classifiable either under the provision for other live animals in item 100.95, TSUS, dutiable at the reduced column 1 rate of duty of 3.5 percent ad valorem, or under the provision for articles intended solely for testing, experimental or review purposes in item 864.30, TSUS, entitled to temporary duty-free entry under bond provided the requirements therefore are complied with.

Articles subject to classification in item 100.95, TSUS, have been designated "eligible articles" for purposes of the generalized system of preferences (GSP) and, if imported in accordance with the provisions of general headnote 3(C), TSUS, from the Cayman Islands, a designated beneficiary developing country (BCD), or other BCD, are entitled to duty-free entry.

(C.S.D. 80-165)

Manipulation in Bonded Warehouses: Reducing the Alcoholic Content of Imported Duty- and Tax-Paid Bulk Beer; Eligibility for Warehousing

Date: November 29, 1979
File: WAR-1-RRUCDB L 211076

Issue.—It is proposed to reduce the alcoholic content of imported duty- and tax-paid bulk beer by 50 percent in a Customs-bonded warehouse by the addition of an equal volume of water. The product will then be bottled. Does this proposed operation constitute a manipulation allowable in warehouse within the meaning of 19 U.S.C. 1562?

Facts.—An importer proposes to import bulk beer at a given alcoholic content and reduce the alcoholic content of the beer by 50 per centum subsequent to the payment of internal revenue tax and Customs duty. The reduction in alcoholic content would be accomplished by adding to the imported beer an equal volume of water.

The volume of beer, therefore, would be increased twofold. The product would then be bottled.

Law and analysis.—Title 19, United States Code, section 1557(a) provides in part that:

> (A)ny merchandise *subject to duty* * * * may be entered for warehousing and be deposited in a bonded warehouse at the expense and risk of the owner, importer or consignee [italic added].

The statement of facts indicates that the proposed operation contemplates the placing of imported duty- and tax-paid bulk beer in a Customs-bonded warehouse for the purpose of diluting with water to reduce the alcoholic content and for bottling. On the bare statement of facts, the operation would not be permissible since duty-paid merchandise may not be placed in a Customs-bonded warehouse.

Section 144.1(c), Customs Regulations (19 CFR 144.1(c)), however, provides in pertinent part that:

> If merchandise has been entered under other than a warehouse entry and has remained in continuous Customs custody, a warehouse entry may be substituted for the previous entry. If estimated duties were deposited with the superseded previous entry, that entry shall be liquidated for refund of the estimated duties without awaiting liquidation of the warehouse entry.

It should also be noted that a proposal has been submitted to amend 19 U.S.C. 1557(a) by deleting the phrase "subject to duty". The amendment, if approved, might be interpreted to allow the deposit of duty-paid merchandise in a Customs-bonded warehouse. There is no indication at this time as to whether or when the proposed amendment might be approved.

Assuming, however, that the imported bulk beer can be placed in a Customs-bonded warehouse, the issue is whether or not the proposed operation of dilution and bottling may be performed.

Title 19, United States Code, section 1562, provides in part that:

> * * * upon permission therefor being granted by the Secretary of the Treasury, and under Customs supervision, at the expense of the proprietor, merchandise may be cleaned, sorted, repacked, or otherwise changed in condition, *but not manufactured*, in bonded warehouses established for that purpose and withdrawn therefrom * * * for consumption, upon payment of the duties accruing thereon, in its condition and quantity, and at its weight, at the time of withdrawal from warehouse * * * [italic added].

The language of section 1562 clearly states that manipulation does not include manufacture. However, it is clear from the phrase "cleaned, sorted, repacked, or otherwise changed in condition," and other language in the section, that manipulation is more than mere storage.

The Supreme Court defined the word "manufacture" for Customs purposes in *Anheuser-Busch Brewing Association* v. *United States*, 207 U.S. 556 (1907) as follows:

> Manufacture implies a change, but every change is not manufacture, and yet every change in an article is the result of treatment, labor, and manipulation. But something more is necessary, as set forth and illustrated in *Hartranft* v. *Weigiman*, 121 U.S. 609 (1887). There must be a transformation; a new and different article must emerge, "having a different name, character, or use."

The test announced in the *Anheuser-Busch* case is a flexible one, as emphasized by the Customs Court in *United States* v. *International Paint Co.*, 35 C.C.P.A. 87, 93 (1948):

> It is true, as the Customs Court pointed out, that both the imported and exported products bore the name "paint" and that in that respect the exported product did not have a distinctive name different from that of the imported product. The fact that an imported product called "paint" was imported and that an exported product resulting from the processing of the imported substance was also called "paint" has been greatly emphasized by counsel * * * but we may not overlook the fact that, as also stated by the Customs Court, "the requirements of change of name, character, or use given in the definition are stated in the disjunctive."

As we understand the proposed operation, beer with an alcoholic content of 9 percent will be imported. Subsequent to importation, an equal volume of water will be added to the beer, reducing the alcoholic content and doubling the volume. The beer will then be bottled. It is our further understanding that the beer, as imported, is fit for consumption.

It is our view that since the product admitted into warehouse is beer and the product withdrawn from warehouse is still beer, although admittedly in a different condition, the described operation is permissible as a manipulation under 19 U.S.C. 1562, since the product is "otherwise changed in condition, but not manufactured."

We note that 19 U.S.C. 1311, which relates to bonded manufacturing warehouses, provides in part that:

> * * * distilled spirits which are reduced in proof and bottled in such warehouses, shall be deemed to have been manufactured *within the meaning of this section* * * * [Italic added.]

Since that provision refers only to distilled spirits and is applicable only to procedures in section 1311 bonded manufacturing warehouses, it has no effect upon the reduction in alcoholic content of beer in a manipulation warehouse.

Holding.—Imported duty- and tax-paid bulk beer may not be placed in a Customs-bonded warehouse under current law and regula-

tions. However, imported bulk beer, if entered for warehouse, may be reduced in alcoholic content by the addition of an equal volume of water. The procedure is a permissible manipulation within the meaning of 19 U.S.C. 1562. The beer, if withdrawn from warehouse for consumption following the manipulation, will be dutiable in its condition and quantity, and at its weight, at the time of withdrawal from warehouse, with such additions to or deductions from the final appraised value as may be necessary by reason of change in condition.

(C.S.D. 80-166)

Marking: Use of Tradename as Acceptable Marking on Parts of Watches

Date: December 7, 1979
File: MAR-2-05-RRUEE
710902 HS

This was initiated by (name), customhouse brokers, on behalf of Sundial Enterprises, Ltd. It concerns whether the trademark "Sundial" is acceptable for marking purposes under the special marking requirements for watches.

Issue.—Whether the trademark "Sundial" is an acceptable marking on parts of watches.

Facts.—Sundial Enterprises, Ltd., imports watches into the United States. The watches are marked with the company's registered trademark "Sundial." The company claims that all its business is done under the name "Sundial." Its letterheads and checks bear the name Sundial Enterprises, Ltd.

Law and analysis.—Schedule 7, part 2, subpart E, headnote 4, Tariff Schedules of the United States (1978), sets forth special marking requirements for watches. According to these requirements, any movement or case imported into the country shall not be permitted to be entered unless conspicuously and indelibly marked by cutting, die-sinking, engraving or stamping, with among other things, the name of the manufacturer or purchaser. The special marking requirements for watches are strictly construed.

T.D. 42092 states that where the law requires the name of the maker or purchaser on an imported article, the bona fide name is required and a trade name or trademark will generally not be accepted. A trademark will be accepted only when it includes the actual name of the manufacturer or purchaser. In cases, however, where the manufacturer or purchaser regularly carries on his business under a duly registered trade name, such trade name would be regarded as the

bona fide name of the manufacturer or purchaser for the purposes of importation.

In this case, "Sundial" is the registered trademark of Sundial Enterprises, Ltd., but the actual full name of the company is Sundial Enterprises, Ltd. The company claims that the "Sundial" marking should be sufficient marking, however, as the company does all its business under the name "Sundial."

For purposes of the special marking requirements, we are of the opinion that the name under which a company actually carries on its business will be acceptable, whether it is a trademark or a trade name. A single word, such as "Sundial," will be acceptable if it identifies the company. The kind of trademark which will not be be acceptable marking for purposes of the special marking requirements is one which describes or refers to a particular characteristic or feature of a watch or clock, but is not the name under which the company carries on its business.

Holding.—A single word, such as "Sundial," which identifies the company that manufactures or purchases watch components or cases is an acceptable marking on parts of watches.

(C.S.D. 80-167)

Bonds: Whether Bond Given To Assure Exportation or Destruction May Be Canceled by Entry of Merchandise for Warehousing

Date: December 10, 1979
File: CON-9-RRUCDB MM 210913

Issue.—Whether a bond given to assure the exportation or destruction of merchandise admitted temporarily free of duty may be canceled if the goods are entered for warehouse under a warehouse entry bond.

Facts.—A shipping skid used for holding a reactor's pressure head during transportation was admitted temprarily free of duty under bond pursuant to item 864.45, Tariff Schedules of the United States. The skid was imported on a loan basis to be returned to France. The importer now intends to purchase and retain possession of the skid and inquires as to the procedure to be followed to cancel the bond and original entry upon presentation and acceptance of a warehouse entry with required bond.

Law and analysis.—Headnote 1, schedule 8, part 5C, Tariff Schedules of the United States, which governs the entry of articles admitted temporarily free of duty under bond, provides in part that

articles, when not imported for sale or sale on approval, may be admitted into the United States without payment of duty under bond for their exportation within certain time limits.

Section 10.39(d)(1) of the Customs Regulations states in part as follows:

> If any article entered under schedule 8, part 5C, Tariff Schedules of the United States * * * has not been exported or destroyed in accordance with the regulations in this part within the bond period (including any lawful extension), the District Director shall make a demand in writing under the bond for the payment of liquidated damages equal to the entire amount of the bond. If the entry covering the articles is charged against a term bond, the demand shall be limited to an amount equal to double the estimated duties applicable to such entry. * * *

Exportation, therefore, is a statutory requirement which cannot be waived. Further, the bond posted at the time of entry obligates the importer to either export or destroy the merchandise within the prescribed time limits and cannot be accomplished by entering the merchandise into a warehouse. Failure to export or destroy articles admitted temporarily free under bond constitutes a breach of bond resulting in a demand for liquidated damages.

Concerning the substitution of a warehouse entry for the temporary importation entry, under the authority of section 10.31(g) of the Customs Regulations, such a substitution could only take place if the original entry was made because of a clerical error, mistake of fact or other inadvertence within the meaning of 19 U.S.C. 1520(c)(1). If filing the temporary importation entry comes within the purview of 19 U.S.C. 1520(c)(1), then documentary evidence should be submitted to the District Director to substantiate such a claim.

Holding.—A bond given to assure the exportation or destruction of merchandise admitted temporarily free of duty may not be canceled by entering the goods for warehouse under a warehouse entry bond. Cancellation can only be accomplished upon exportation or destruction of the goods under Customs supervision or upon payment of liquidated damages.

(C.S.D. 80-168)

Export Value: Dutiability of Freight Charges; Section 402(b), Tariff Act of 1930, as Amended

Date: December 11, 1979
File: RRUCV RP
542064

This is in reference to your letter of September 25, 1979, concerning the importation of seamless pipe from Japan.

You indicate that the importer purchases the seamless pipe in Japan on an f.o.b. Japanese port basis. The final destination for the pipe will be Prudhoe Bay, Alaska.

The routing of the shipments will be as follows:

(1) Ocean freight to Vancouver, British Columbia;

(2) Rail freight from Vancouver to Calgary, Alberta (where the pipe will be coated and recrated for reshipping);

(3) Rail freight from Calgary to Hay River, Northwest Territory; and

(4) Barge from Hay River to Prudhoe Bay, Alaska.

You ask whether the ocean freight from Japan to Canada and the rail freight from Canada to Alaska form part of the dutiable value of the subject merchandise.

We are assuming, for the purpose of this reply, that export value, section 402(b), Tariff Act of 1930, as amended, is the proper basis of appraisement for the subject merchandise. Section 402(b) provides:

> (b) *Export value.*—The export value of the imported merchandise shall be the market value or the price, at the time of exportation of such merchandise to the United States, at which such or similar merchandise is freely offered for sale to all purchasers in the principal markets of the country from which exported in the usual wholesale quantities and in the ordinary course of trade, for exportation to the United States, plus, when not included in such price, the cost of all containers and coverings of whatever nature, and all other costs, charges, *and expenses incident to placing the merchandise in condition, packed ready for shipment to the United States* [Italic added.]

In view of the above, Customs has held that, ordinarily, any cost incurred after the merchandise is packed ready for shipment to the United States, is not a part of the appraised value of merchandise for Customs purposes. Accordingly, it is our opinion in the instant case that the ocean and rail freight charges and the costs in Canada of coating and recrating incurred after the merchandise leaves the Japanese port do not form part of the dutiable value of the imported pipe.

We note that since the merchandise in question is being shipped to the United States through an intermediate country (Canada), it becomes necessary to determine the country of exportation. If the intermediate country is found to be the country of exportation, certain costs incurred after shipment from the country of origin will be added to the value of the merchandise in order to arrive at the appraised value of the imported merchandise in the intermediate country, e.g., the cost of the transportation from the country of origin to the intermediate country. However, if it is established by the invoice, bill of lading, or other documentary evidence that the merchandise was under a contract of sale to and destined for a purchaser in the United States at the time of original shipment, it shall be treated as exported from the country of origin. In this regard, see section 152.23, Customs Regulations.

(C.S.D. 80-169)

Classification: Wraparound, Fastenable Wool Body Protector

Date: December 11, 1979
File: CLA-2:RRUCGC
060939 BB

This ruling concerns the tariff classification of a "Hypothermia Emergency Lifesaving Protector."

Issues.—Whether the subject merchandise is lifesaving apparatus imported for the use of an institution established to encourage the saving of human life, a blanket, or an article of textile materials not specially provided for.

Facts.—This ruling is based upon information about the merchandise contained in the illustrated brochure which accompanied the request for ruling.

The merchandise is stated to be of 100 percent wool with velcro closures. The brochure also refers to a waterproof ground sheet which, from the illustration, appears to be part of the same article. However, we cannot determine whether this ground sheet is also made from wool. For purposes of this ruling we assume the article is in chief value of wool.

The merchandise folds out flat. It appears to be longer than a person is tall, with a hood at one end and an extension beyond the feet at the other. The protector appears to extend 18 to 24 inches on either side of the person's body. The foot extension folds up over the feet while the side extensions wrap across the body. Adjustable velcro

fasteners allow the victim to be encased by the protector in cocoon-like fashion. When not in use the protector folds into a self-contained unit with a shoulder strap for easy carrying.

The inquirer states that it will act as the importer and sales representative for this merchandise in the United States. The stated purpose of the protector is to keep an accident or shock victim warm until medical treatment begins. The inquirer and the brochure describe the merchandise as a lifesaving device. The brochure states that "the stimulus for the development of the protector was furnished by the World Lifesaving Organization."

Law and analysis.—Item 853.10, Tariff Schedules of the United States (TSUS), provides for the duty-free entry of lifesaving apparatus imported for the use of an institution established to encourage the saving of human life. The subject merchandise appears to be lifesaving apparatus. However, headnote 1, part 4, schedule 8, TSUS, requires that in order to be given duty-free treatment such apparatus must be "exclusively for the use of the institutions involved and not for distribution, sale or other commercial use within 5 years after being entered."

As the inquirer intends to act as a commercial distributor and since the brochure states the protectors should be carried on industrial and construction vehicles, private aircraft, small boats, and by ski lodges, it appears that most of these protectors would not qualify for entry under 853.10, TSUS.

If specific protectors are imported for use by a police or fire rescue unit, for example, the distributor may act as the agent for such unit by identifying the qualifying institution at the time the merchandise is entered. Under these circumstances the protectors may be entered under item 853.10, TSUS. See Headquarters Ruling Letter (HRL) 043533, dated March 10, 1976.

The inquirer states that the subject merchandise is not a blanket. We agree. Headnote 1(b), subpart B, part 5, schedule 3, TSUS, states:

> (b) the term "blankets" includes baby carriage robes, lap robes, and steamer rugs notwithstanding the fact that they are not chiefly used as bed furnishings

All of the items named in the headnote are primarily used as covers. The subject merchandise, however, is more than a cover. It is designed and used as a wraparound, fastenable, lifesaving device. In HRL 060334, dated August 30, 1979, Customs held that a "blanket wrap" with a zippered-snap closure system was classifiable as an article of textile materials not specially provided for rather than a blanket. The same principal applies to the instant merchandise.

Holding.—Assuming these protectors are in chief value of wool, that they are woven and that they are not ornamented, the merchandise is properly classifiable under the provision for articles not specially provided for, of textile materials; other articles, not ornamented, of wool, other, in item 388.40, TSUS, dutiable, if a product of New Zealand, at the column 1 rate of 16 percent ad valorem.

(C.S.D. 80–170)

Classification: Shirts as Underwear; Shirts and Pants as Entireties

Date: December 12, 1979
File: RRUCMC
060699 MH

This ruling concerns the tariff classification of several shirts, products of West Germany.

Issues.—(1) Whether the submitted samples are classifiable as underwear for tariff purposes.

(2) Whether the submitted samples, imported together with their respective pants portions, constitute entireties for tariff purposes.

Facts.—Four sample shirts are presented. All are of knit construction, and are stated to be composed of 45 percent wool, 20 percent angora rabbit hair and 35 percent nylon. They are labeled and described by the inquirer as follows:

Sample 1—men's striped crew-neck shirt, style 921/27 (ladies' style L921/47)

Sample 2—ladies' crew-neck shirt, style L920/27 (men's style 920/47)

Sample 3—ladies' zippered turtleneck shirt, style L920/82 (men's style 920/82)

Sample 4—men's turtleneck shirt, style 920/52 (ladies' style L920/52)

The inquirer presents exhibits which show that the merchandise is advertised as underwear. In addition, portions of several catalogs are presented in which the merchandise is referred to as underwear. The inquirer indicates that catalog orders will comprise between one-third and one-half of the total orders for the instant merchandise.

Law and analysis.—The competing provisions of the Tariff Schedules of the United States (TSUS) are as follows:

Schedule 3, part 6, subpart E:
Other underwear, not ornamented:
Of wool:

378.35	Knit	37.5¢ per lb+ 6.5% ad val.

Schedule 3, part 6, subpart F:
Other women's, girls', or infants' wearing apparel, not ornamented:
Of wool:
Knit:
Other:
Valued over $5 per pound:

382.58	Other	37.5¢ per lb+ 20% ad val.

The leading case concerning the tariff definition of the term underwear is *Children's Hose, Inc.* v. *United States*, 55 Cust. Ct. 6, C.D. 2547 (1965). In *Children's Hose* the Customs Court held that in order for a garment to be classifiable as underwear, that garment must be completely concealed during its normal wear. The merchandise at bar consisted of certain leotards which were found to have had specialized uses as outerwear and were held classifiable as wearing apparel for tariff purposes.

In urging that the instant merchandise is underwear, the inquirer relies on Headquarters ruling letter 059017 (dated Apr. 19, 1978) in which certain merchandise, sold exclusively in catalogs, was held to constitute underwear despite the fact that the garments were capable of being used as outerwear. The Customs Service noted that garments which were advertised and sold through catalogs rather than over the counter were less likely to be purchased for a fugitive use as outerwear.

Unlike the merchandise presented in HRL 059017, which was sold exclusively through catalogs only one-third to one-half of the instant merchandise is to be sold in catalogs. The presumption that the merchandise is less likely to be sold as outerwear is not applicable. Reliance on HRL 059017 is therefore, misplaced.

The inquirer stresses that the construction of the merchandise is relevant in determining its classification. The Customs Service agrees. In view of *Children's Hose, supra*, however, the basic inquiry must remain whether the garment will be visible with the wearer conventionally attired.

The visibility test of *Children's Hose* is determinative in considering the classification of the turtleneck garments. Portions of those garments, like the leotards in *Children's Hose*, are visible when worn.

Accordingly, the Customs Service concludes that samples 3 and 4 cannot be considered underwear for tariff purposes.

The holding in *Children's Hose* does not similarly dictate the classification of samples 1 and 2. No portion of those garments will be visible when they are normally worn.

The Customs Court has held that the provisions for wearing apparel are use provisions. *Admiral Craft Equipment Corp.* v. *United States*, ——, Cust. Ct. ——, C.D. 4796 (1979). The provisions for underwear (a type of wearing apparel), must likewise be considered use provisions.

General headnote 10(e)(i), states that a tariff provision controlled by use is governed by the chief use of the merchandise. It remains to determine the chief use of samples 1 and 2.

The determination of the chief use of particular merchandise must be based on the evidence which is presented. The inquirer has shown that the instant merchandise is advertised, packaged, and sold as underwear. It is specially constructed so as to retain warmth. In the absence of evidence to the contrary, the Customs Service concludes that the chief use of items 1 and 2 is as underwear. They are, thus, classifiable as underwear for tariff purposes.

The final question presented is whether the instant shirts constitute entireties when imported together with their respective pants portions. In Headquarters Ruling Letter 059722 (dated Apr. 13, 1979), the Customs Service enunciated the following criteria in determining whether wearing apparel sets constitute entireties:

> Accordingly, in the absence of an established and uniform practice to the contrary, the Customs Service will usually classify wearing apparel sets as entireties if (1) the components are coordinated as to color to the extent that it is obvious that those components were designed and intended to be worn together; (2) the components of the set are sold as a unit and not separately; and (3) the components, when joined together, form a new article which possesses a character or use different from that of its parts, or one of the components in the set is so predominant that the other components are merely incidental to that predominant component.

The instant merchandise is packaged and sold separately. The shirts and longies do not constitute entireties for tariff purposes.

Holding.—Assuming the instant merchandise is in chief value of wool, it is classifiable as follows: Samples 1 and 2 are classifiable in item 378.35, TSUS, dutiable at the rate of 37.5 cents per pound plus 6.5 percent ad valorem.

Samples 3 and 4 are classifiable in item 382.58, TSUS, dutiable at the rate of 37.5 cents per pound plus 20 percent ad valorem.

(C.S.D. 80-171)

Drawback: Designation of Same Kind and Quality Merchandise; Tinplate Coils

Date: December 12, 1978
File: DRA-1-09-RRUCDB: B
211104

Issue.—May tinplate be designated on a total base weight, rather than on a grade-for grade basis, for issuance of drawback under 1313(b)?

Facts.—A manufacturer produces sheet tinplate from imported tinplate coils. Upon receipt of each coil, its base weight and coating are recorded. The initial manufacturing step is "sheeting," whereby the coil is placed on line and cut into specific sheet sizes. Each sheet is then electronically scanned to detect flaws in the tin coating. It is this step which divides the tinplate sheets into prime and lesser grades.

In order to sell these lower grade sheets in commercial size lots, various base weights and coating arecombined. Upon exportation of these lots, the manufacturer can show total pounds of tinplate, but can define the base weights and coatings in ranges only. An example would be "bundle A contains 1,000 pounds tinplate; base weight 70 to 85 pounds, coating 0.25 to 0.50."

Law and analysis.—Currently, tinplate is dutiable at either 8 percent ad valorem, if valued not over 10 cents per pound (608.91, TSUS), or eight-tenths cent per pound, if valued over 10 cents per pound (608.92, TSUS). It is claimed by the applicant that all prime coated cold-rolled steel, no matter what the base weight or coating thickness, is valued well above 10 cents per pound, effectively placing an eight-tenths-cent-per-pound duty on all importations of tinplate. The applicant therefore believes that there would be no difference in drawback recovery regardless of base weight and coating and that designation may be made on total pounds of imported tinplate.

One fundamental of 1313(b) drawback is that imported merchandise of the same kind and quality as domestic merchandise used in production must be designated for drawback. To insure that same kind and quality tinplate will be designated, we have required that the parallel columns in a drawback proposal indicate ASTM, AISI, or SAE specifications for the coating and base metal. Another fundamental for allowance of drawback under 1313(b) is that the exported articles upon which drawback is claimed were produced with same kind and quality merchandise, whether imported, domestic, or a combination of the two.

Should designation in this case be made on a weight basis alone, Customs would have no way of determining whether same kind and quality merchandise had been used in manufacture of the exported sheets. The same kind and quality requirement is statutory, and we must insure that it is met in 1313(b) drawback situations. To adopt applicant's theory could result in our allowing drawback on dissimilar designated merchandise, so long as a specific rate of duty on that merchandise was the same as that which would have been assessed on the domestic had it been imported. This is not permitted by the language of the statute.

Holding.—Tinplate must be designated on a grade-for-grade basis, both as to coating and base metal. This ruling should not be construed as stating the mere cutting of tinplate coils into sheets is a manufacture or production within the meaning of the drawback laws.

(C.S.D. 80-172)

Classification: Leather Boot Roller Skates; General Interpretative Rule 10(h), TSUS

Date: December 12, 1979
File: CLA-2:RRUCGC
062466 c

This ruling concerns the tariff classification of leather boot roller skates without wheels and bearings manufactured in Taiwan.

Facts.—The sample is a roller skate boot with the sole plate and truck assemblies permanently attached. The bearings and wheel assemblies are not attached.

The inquirer maintains that this merchandise is classifiable under the provision for skates (including footwear with skates permanently attached), and parts thereof, roller skates, and parts thereof in item 734.90, Tariff Schedules of the United States (TSUS).

Issue.—Whether the merchandise is classifiable as claimed by the inquirer or whether the shoe portion is separately classifiable as footwear under schedule 7, part 1, subpart A, TSUS, and the skate portion under the provision for parts of roller skates in item 734.90, TSUS?

Law and analysis.—Schedule 7, part 1, subpart A, headnote 1(i), TSUS, provides that:

> This subpart covers boots, shoes, slippers, sandals, moccasins slipper socks (socks with applied soles of leather or other material), scuffs, overshoes, rubbers, arctics, galoshes, and all other allied footwear (including athletic or sporting boots and shoes)

of whatever material composed, and by whatever method constructed, all the foregoing, designed for human wear except (i) footwear with permanently attached skates or snowshoes (see part 5D of this schedule).

The Customs Service has held that if any portion of the roller skate was missing from a shoe-style roller skate, the shoe portion was separately classified as footwear under schedule 7, part 1, subpart A, TSUS, while the skate portion was classified under the provision for parts of roller skates in item 734.90, TSUS.

We have reconsidered our position in this matter in view of General Headnote 10(h), TSUS, which provides that unless the context requires otherwise, a tariff description for an article covers such article, whether assembled or not assembled and whether finished or not finished.

Following the above cited headnote it is our opinion that the sample roller skate boot with the sole plate and truck assemblies permanently attached constitutes unfinished roller skates.

Holding.—Merchandise represented by the sample is classifiable under the provision for skates (including footwear with skates permanently attached), and parts thereof: Roller skates, and parts thereof, in item 734.90, TSUS, and dutiable at the rate of 5 percent ad valorem.

Pursuant to Executive Order 11888, of November 24, 1975, as amended, various products from designated eligible developing countries have been granted free entry. Articles classifiable under item 734.90, TSUS, which have been produced in Taiwan are entitled to free entry if otherwise qualified. For your information we are enclosing explanatory material.

(C.S.D. 80–173)

Prohibited and Restricted Importations: Copyright Infringement; Brass Christmas Tree Ornaments

Date: December 12, 1979
File: CPR-3-RRUEE
711483 SO

This ruling concerns whether or not a shipment of brass Christmas tree ornaments is considered to be an infringing importation pursuant to section 602 of the 1976 U.S. Copyright Law (17 U.S.C. 602).

Issue.—Would the importation from Japan of a shipment of four brass Christmas tree ornaments of the filigree (cut-out) type invoiced as Santa, Double Bell, Pear Tree, and Partridge in Pear Tree infringe upon the rights of the copyright owner (name of corporation), which has recorded their copyrights for Santa and Child, Gp 116407;

Christmas Double Bell, Gp 115540; Partridge in Pear Tree, Gp 90949; and Filigree Partridge in Pear Tree, Gp 116869, for brass Christmas tree ornaments with Customs for import protection.

Facts.—A shipment of brass Christmas tree ornaments containing those referred to above was imported from Japan through the port of Longview, Washington. Pursuant to section 133.43 of the Customs Regulations (19 CFR 133.43), Customs at Longview notified the importer and the copyright owner of the suspected infringing importation. The importer wrote to our Longview office on July 17, and September 4, 1979, to deny that copying exists, stating that brass Christmas tree ornaments are available from many sources which incorporate subjects associated with Christmas such as Santa, bells, wreaths, partridges, pears, and pear trees. Specific differences in each item as compared to the copyright protected works are alleged to be present. It is also alleged that these traditional designs, particularly with respect to bells, are available in many other mediums in addition to brass, and, presumably, they are in the public domain.

The copyright owner wrote to Customs at Longview, Wash., on August 20, 1979, to make written demand for the exclusion from entry of the detained imported articles as infringing copies of their protected works. The copyright owner also filed the bond required by 19 CFR 133.43(b)(2) with Customs.

Law and analysis.—Section 501 of the 1976 United States Copyright Law (17 U.S.C. 501) provides, in part, that anyone who violates any of the exclusive rights of the copyright owner, as provided by section 106 through 118, or who imports copies or phonorecords into the United States in violation of section 602, is an infringer of the copyright. Section 602(a) of the copyright law (17 U.S.C. 602(a)), provides, in part, that inportation into the United States, without authority of the owner of the copyright under this title, of copies or phonorecords of a work that have been acquired outside the United States is an infringement of the exclusive right to distribute copies or phonorecords under section 106, actionable under section 501. Section 603(c) of the copyright law (17 U.S.C. 603(c)), provides, in part, that articles imported in violation of the importation prohibition of this title are subject to seizure and forfeiture, and that forfeited articles shall be destroyed or, alternatively, returned to the country of export whenever it is shown that the importer has no reasonable grounds for believing that his or her acts constituted a violation of law.

The test employed to determine if a design has been copied is whether an ordinary observer who is not attempting to discover disparities between two articles would be disposed to overlook them and regard their aesthetic appeal as the same. The substantial similarity

test was developed in order to bar a potential infringer from producing a supposedly new and different work by employing the tactic of making deliberate, but trivial, variations of specific features of the copyright protected work. It has also been established that copyright in a work protects against unauthorized copying not only in the original medium in which the work was produced, but also in any other medium as well.

Our comparison of the imported articles which are suspected of infringing upon the copyright protected works Santa and Child, Christmas Double Bell, and Filigree Partridge in Pear Tree with photographs of the protected works, reveals, in general, that the imported articles bear a strong resemblance to the copyright protected works. The filigree motif is employed in the imported works Santa and Double Bell to a greater extent than in the copyright protected works and there are other minor differences such as the child seated on the right knee of Santa as opposed to the left knee in the protected work. However, the differences appear to us to constitute a deliberate attempt to make minor variations in the design, while preserving a similar aesthetic appeal to the ordinary purchaser of brass Christmas tree ornaments. The Filigree Partridge in Pear Tree works appear to be almost identical.

We reach a different conclusion with respect to the imported work invoiced as Pear Tree. The copyright protected work is a solid brass pear-shaped design inscribed with a large partridge apparently perched on a bow of a pear tree. However, the imported article, while retaining the pear shape with five large leaves at the top, incorporates significant differences. The filigree design shows a smaller partridge seated in a different pose among many branches, and the rib design for the large leaves is also significantly different. We are of the opinion that this article would not convey the same aesthetic appeal to the ordinary observer as would the protected article.

Holding.—We are of the opinion with respect to the imported articles invoiced as Santa, Double Bell, Partridge in Pear Tree, that, pursuant to 17 U.S.C. 602, these articles would be prohibited entry into the United States as infringing on the rights of the copyright owner (name of corporation). The merchandise is subject to seizure and forfeiture in accordance with 17 U.S.C. 603. The U.S. Customs Service will not reach the issue raised by the importer that these familiar Christmas designs should not be subject to copyright protection because they are in the public domain.

We reach a different conclusion with respect to the imported work invoiced as Pear Tree. We are of the opinion that there is no substantial and hence infringing similarity between this work and the copyright protected work Partridge in Pear Tree. We are recommend-

ing that our Longview, Wash., office release all detained merchandise and transmit the copyright owner's bond to the importer. A copy of this ruling may be furnished to all parties concerned.

(C.S.D. 80-174)

Temporary Importation under Bond: Yard Goods Imported for Baling; Item 864.05, TSUS

Date: December 18, 1979
File: CON-9-RRUCDB L 211212

Issue.—Cotton yard goods are imported into the United States where they are baled and then exported. Is the proposed baling of the yard goods an allowable operation under the temporary importation under bond (TIB) procedure?

Facts.—A domestic company contemplates purchasing cotton yard goods from the People's Republic of China. The yard goods would be brought to its plant in the United States, baled for better compression, and then be exported to Spain.

Law and analysis.—Item 864.05, Tariff Schedules of the United States (TSUS), provides that articles to be repaired, altered, or processed (including processes which result in articles manufactured or produced in the United States) may be admitted temporarily free of duty under bond.

It is clear that the goods will not be repaired or altered. The issue remaining is whether compressing the yard goods into bales is a processing within the meaning of item 864.05, TSUS.

The U.S. Court of Customs and Patent Appeals, in *United States* v. *Border Brokerage Co.* (48 C.C.P.A. 10, 1960) pointed out that:

> Section 308(1) (the predecessor of item 864.05, (TSUS), does not apply broadly to any and all articles repaired, altered or otherwise changed in condition, but is expressly limited to those articles entering this country which are to be repaired, altered or otherwise changed in condition.

Although, in a literal sense, the yard goods are changed in condition by baling, it is our view that the change is wholly incidental to the purpose of entry, which is no more than a repacking of the articles for export. Accordingly, the baling operation is not a processing within the meaning of item 864.05, TSUS.

The operation would be allowable, however, as a manipulation pursuant to 19 U.S.C. 1562 which provides, in part, that:

> Upon permission therefor being granted by the Secretary of the Treasury, and under Customs supervision, at the expense of the proprietor, merchandise may be cleaned, sorted, repacked, or otherwise changed in condition but not manufactured, in bonded warehouses established for that purpose and be withdrawn therefrom for exportation to a foreign country * * *.

That section further provides that:

> Under such regulations as the Secretary of the Treasury shall prescribe, imported merchandise which has been entered and which has remained in continuous Customs custody may be manipulated in accordance with the provisions of this section under Customs supervision and at the risk and expense of the consignee, but elsewhere than in a bonded warehouse, in cases where neither the protection of the revenue nor the proper conduct of Customs business requires that such manipulation be done in a bonded warehouse.

Section 24.17(a)(8). Customs Regulations (19 CFR 24.17(a)(8)), states that:

> When a Customs officer or employee is assigned under authority of section 562, Tariff Act of 1930, as amended (19 U.S.C. 1562), to supervise the manipulation of merchandise at a place other than a bonded warehouse, the compensation and expenses of such officer or employee shall be reimbursed to the Government by the party in interest.

If you wish to explore this alternative, we suggest you get in touch with the District Director of Customs at the port where the manipulation would be conducted.

Holding.—The baling of cotton yard goods for exportation is not a repair, alteration, or other process within the meaning of item 864.05, TSUS. It would constitute a permissible manipulation pursuant to 19 U.S.C. 1562.

(C.S.D. 80–175)

Vessel Repair: Dutiability of Vessel Equipment Preordered From Peru and Delivered to the Vessel in the Panama Canal Zone

Date: July 3, 1980
File: VES-13-18-RRUCDC
104529 JL

This ruling concerns the dutiability under the vessel repair statute, 19 U.S.C. 1466, of equipment purchased for an American fishing vessel in a foreign port.

Issues.—(1) Is an item of vessel equipment dutiable under 19 U.S.C. 1466 when it is preordered from Peru and subsequently delivered to the vessel in the Panama Canal Zone?

(2) Was the purchase of the equipment necessitated by a casualty pursuant to 19 U.S.C. 1466(d)(1)?

Facts.—The vessel at issue operates under a register and is engaged in tuna fishing. The seine net was rebuilt and enlarged to increase the fishing capability of the vessel. This modification had the result of pressing the capacity of the power block operation. Accordingly, a new power block was ordered from a firm in Peru in 1978 which shipped the unit to the Panama Canal Zone. In April 1979, the vessel sailed on the fishing voyage at issue and put into the zone in May to pick up the new power block. It was installed by crewmembers of the vessel. The master states that the change in the power block was an urgent necessity for the proper and effective fishing operation of the ship. At the conclusion of the vessel's voyage in October 1979, the cost of the power block was declared by the master but he maintains that the purchase is free of duty under the vessel repair statute.

Law and analysis.—19 U.S.C. 1466(d)(1) states the Secretary of the Treasury is authorized to refund or remit duties * * *

> if the owner or master of such vessel furnishes good and sufficient evidence * * * that—
>
> > (1) such vessel, while in the regular course of her voyage was compelled by stress of weather or other casualty, to put into such foreign port and purchase such equipments, or make such repairs to secure the safety and seaworthiness of the vessel to enable her to reach her port of destination; * * *.

Prior to the implementation of the Panama Canal Treaty on October 1, 1979, and the issuance of T.D. 79-276, footnote 26 to part 4 of the Customs Regulations read as follows:

> The Canal Zone and the Virgin Islands are not "foreign countries" within the meaning of section 466, Tariff Act of 1930, and equipment, repair parts, or materials there purchased or repairs there made on a vessel of the United States are not dutiable.

Headquarters case 102924 dated August 11, 1977, stated that while foreign repairs to U.S. vessels, or equipment purchases by those vessels, in the Canal Zone or the Virgin Islands are not dutiable under 19 U.S.C. 1466, the ruling will not be decisive as to equipment which is merely delivered in those places. It was held that:

> We will consider the dutiability of any commercial transaction brought to our attention where there is evidence that the Virgin Islands or Canal Zone delivery is not the result of a bona fide sale in those places.

Pursuant to Headquatrers case 102924, vessel equipment which is ordered from a foreign country and merely delivered in the Canal Zone is not considered equipment purchased in the Canal Zone within the exemption formerly provided in footnote 26 to part 4 of the Customs Regulations.

In the instant case, there is no claim by the master of the vessel that the purchase of a new power block was necessitated by a casualty as provided for in 19 U.S.C. 1466(d)(1). Further, the new piece of equipment was ordered prior to the vessel's departure from the United States and any damage that was incurred as a result of the modification to the net apparently took place on a previous voyage. Therefore, it cannot be said that the vessel while in the regular course of her voyage was compelled by stress of weather or other casualty to put into a foreign port and purchase equipment to secure the safety and seaworthiness of the vessel to enable her to reach her port of destination.

Holding.—(1) There is no showing that the equipment purchase by the vessel was necessitated by a casualty pursuant to 19 U.S.C. 1466(d)(1), and no remission is authorized.

(2) Vessel equipment preordered from Peru which is delivered in the Canal Zone for installation on an American fishing vessel prior to October 1, 1979, is not considered purchased in the Canal Zone within the meaning of footnote 26 to part 4 of the Customs Regulations and is therefore dutiable under 19 U.S.C. 1466.

Effect on other rulings.—Case 102924 applied.

Recent Unpublished Customs Service Decisions

The following listing of recent administrative decisions issued by the Office of Regulations and Rulings, U.S. Customs Service, and not otherwise published, is published for the information of Customs officers and the importing community. Although the decisions are not of sufficient general interest to warrant publication as Treasury decisions, the listing describes the issues involved and is intended to aid Customs officers and concerned members of the public in identifying matters of interest which recently have been considered by the Office of Regulations and Rulings.

A copy of any decision included in this listing, identified by its date and file number, may be obtained in a form appropriate for public distribution upon written request to the Office of Regulations and Rulings, attention: Legal Reference Area, room 2404, U.S. Customs Service, 1301 Constitution Avenue NW., Washington, D.C. 20229. These copies will be made available at a cost to the requester of 10 cents per page. However, the Customs Service will waive this charge if the total number of pages copied is 10 or less.

Decisions listed in earlier issues of the CUSTOMS BULLETIN, through July 2, 1980, are available in microfiche format at a cost of $23.85 (15 cents per sheet of fiche). It is anticipated that additions to the microfiche will be made quarterly and subscriptions are available. Requests for the microfiche now available and for subscriptions should be directed to the Legal Reference Area. Subscribers will automatically receive updates as they are issued and will be billed accordingly.

Dated: August 22, 1980.

JOHN T. ROTH,
Acting Director,
Regulations and Research Division.

Date of decision	File No.	Issue
6-23-80	104499	Vessels: Whether a foreign-built yacht, brought into the United States solely for time and voyage chartering, is dutiable under the tariff schedules

Date of decision	File No.	Issue
8- 5-80	104566	Instruments of international traffic: Incidental use of foreign-built containers in domestic traffic
6-17-80	104699	Vessels: Dutiability of American-built vessel, sold to a Canadian, registered in Canada, and then resold to an American, without ever leaving U.S. waters
7-31-80	104769	Vessels: Requirement that the original register be on board a vessel documented under laws of the United States; unmanned barges
8- 7-80	104812	Carrier control: Whether a foreign vessel may engage in research in U.S. territorial waters
4-14-80	711746	Generalized system of preferences (GSP): Whether GSP status is available when consumption entry was filed after GSP status was modified, although immediate delivery release was obtained prior to effective date of modification
7-17-80	712719	Country-of-origin marking: Whether Japanese plain end pipe threaded and attached to Japanese couplings in Mexico to form oil well casing are substantially transformed in Mexico so that Mexico is the country of origin
7-17-80	712924	Country-of-origin marking: Empty cologne and perfume bottles imported into the United States where they will be filled with various products and sold to department stores for retail sale
7-17-80	713175	Prohibited and restricted importations: Motor vehicles which do not conform to U.S. emission or safety standards
7-11-80	060769	Classification: Stereo photographs; stereo viewers (274.70, 722.55, 722.56)
7-11-80	060825	Classification: Advertisements on flexible polyvinyl chloride sheets (274.90)
7-11-80	060881	Classification: Laxative capsules (440.00)
7-24-80	060884	Classification: Uncooked frozen pastry dough (182.20, 183.01)
7-11-80	061804	Classification: Acrylic knit sweaters made on weft knitting machine (382.04)
3- 5-80	061806	Classification: Building toys (737.55, 737.95)
5-21-80	061964	Classification: Crude alkyl pyridine residues (401.20, 401.46, 401.58, 793.00, 403.90)
6-29-80	062826	Classification: Fertilizer spreader (666.00)
7-11-80	062935	Classification: Tractor for log hauling (692.34)
6-29-80	062964	Classification: Unground radial ball bearings; graphite carbon ball bearings (517.91, 681.10, 680.35)
6-29-80	062970	Classification: Cryogenic container for bull semen (640.20, 657.25, 666.00)
7-11-80	063649	Classification: Combination light and siren (678.50, 732.52)
6-29-80	064077	Classification: Boys' nylon taffeta vest (376.56, 380.84)
7-11-80	064108	Classification: Shoe upper of rayon (700.60)

Date of decision	File No.	Issue
5-19-80	064198	Classification: Hemodialysis pump (660.97, 709.17)
7-11-80	064296	Classification: Commercial baking pans and covers (657.15, 657.25, 657.40, 657.60)
6-29-80	064313	Classification: Ballpoint pen parts (760.40)
6-30-80	064314	Classification: Flexible gear couplings (680.95)
6-29-80	064317	Classification: Vacuum and cooking cutter (666.25, 851.60)
7-11-80	064439	Classification: Cold rolled steel sheets laminated with plastic (657.25)
6-29-80	064454	Classification: Roofing sheets with steel core and layer of asphalt and aluminum on both sides (653.00, 657.25, 657.40)
7-11-80	064455	Classification: Pressure and load equalizer valve (680.27, 685.90)
5- 5-80	064459	Classification: Spring-suspension hobbyhorse (737.80, 737.95)
7-24-80	064466	Classification: Curiosity object (657.35, 765.25)
7-23-80	064490	Classification: Surgical drape (386.50, 389.62, 807.00)
6-29-80	064491	Classification: Plastic cutoff riser for sprinkler system (774.55)
6-29-80	064503	Classification: Plastic envelopes with adhesive backing (790.55)
6-29-80	064581	Classification: Thermostatic mixing valve (680.27)
7-11-80	064595	Classification: Computer play organ (725.47)
7-11-80	064635	Classification: Educational play sets (735.20, 737.95)
7-11-80	064665	Classification: Whether a hammer loop on nonwork jeans is ornamental; whether a rectangular fabric label with plain letters is ornamental on jeans (382.00, 382.33)
7-11-80	064679	Classification: Feeding, folding, ironing, and stacking machines designed for operations in a commercial laundry (664.10, 670.42, 670.50, 678.50)
7-11-80	064718	Classification: Fruit presser; crusher (666.25, 678.50)
7-24-80	064753	Classification: Whether fabric strip on man's pajama top which serves to complete the garment is ornamental (380.21, 380.24, 380.84)
7-11-80	064777	Classification: Sachets (386.04, 386.09, 727.86, 737.22)
6-29-80	064785	Classification: Electric water heater (684.40)
7-11-80	064792	Classification: Plastic match holder (735.20, 772.20, 772.85)
6-25-80	064844	Classification: Fiberglass protective helmets (703.70)
7-11-80	064857	Classification: Shading material (338.30, 355.81, 355.82)
7-30-80	064939	Classification: Blueberry rake (651.39)
7-11-80	065081	Classification: Whether overhanging flaps on a woman's jacket constitute ornamentation (382.04)
7-11-80	065120	Classification: Whether textile loops attached to the back of hunting garment collars constitute ornamentation

Index

U.S. Customs Service

Treasury decisions: T.D. No.
- Bonds, consolidated aircraft 80-216
- Cotton and manmade fiber textile products 80-219
- Cotton, wool, and manmade fiber textile products 80-220
- General agreement on tariffs and trade 80-218
- Instrument of international traffic 80-217

General notice: American manufacturer's petition

Customs Service decisions: C.D. No.
- Bonds 80-167
- Classification:
  - Leather boot roller skates 80-172
  - Pleated polyester fabric 80-153
  - Shirts as underwear 80-170
  - Temporary importation under bond 80-164
  - Thermal underwear tops 80-158
  - Wraparound 80-169
- Drawback:
  - Certificate of delivery requirements 80-160
  - Designation of same kind and quality 80-171
  - Conditionally free merchandise 80-155
  - Schedules (formulas) 80-156
  - Whether reducing the degree brix of orange juice concentrate is an approved manufacturing process 80-162
- Duty assessment 80-163
- Export value:
  - Dutiability of freight charges 80-168
  - Whether sales to a related selected purchaser fairly reflect market value 80-152
- Generalized system of preferences 80-151
- Manipulation in bonded warehouses 80-165
- Marking 80-166
- Prohibited and restricter importations:
  - Combination pen and penholder 80-159
  - Copyright infringement 80-173
  - Solid molded golf balls 80-154
- Temporary importation under bond:
  - Whether TIB entry may be substituted for trade fair entry 80-161
  - Yard goods imported for bailing 80-174
- Value 80-157
- Vessel repair 80-175

U.S. GOVERNMENT PRINTING OFFICE : 1980 O - 326-864

SEP 23 1980
J# 326-865
CP 378
Item 950-D T 1.11/3:14/38
contin

Customs Bulletin

Regulations, Rulings, Decisions, and Notices concerning Customs and related matters

and Decisions

of the United States Court of Customs and Patent Appeals and the United States Customs Court

9247
HCH.

Vol. 14 SEPTEMBER 17, 1980 No. 38

This issue contains

T.D. 80–221 through 80–226
C.A.D. 80–3
C.D. 4868 through 4871
Protest abstracts P80–120 through P80–21
Reap. abstracts R80–252 through R80–260
International Trade Commission Notices

THE DEPARTMENT OF THE TREASURY
U.S. Customs Service

NOTICE

The abstracts, rulings, and notices which are issued weekly by the U.S. Customs Service are subject to correction for typographical or other printing errors. Users may notify the U.S. Customs Service, Logistics Management Division, Washington, D.C. 20229, of any such errors in order that corrections may be made before the bound volumes are published.

For sale by the Superintendent of Documents, U.S. Government Printing Office, Washington, D.C. 20402. Price: $2.25 (single copy domestic); $2.85 (single copy foreign). Subscription price: $85.00 a year domestic; $106.25 a year foreign.

U.S. Customs Service

Treasury Decisions

(T.D. 80-221)

Foreign Currencies—Daily Rates for Countries Not on Quarterly List

Rates of exchange based on rates certified to the Secretary of the Treasury by the Federal Reserve Bank of New York for the Brazil cruzeiro, People's Republic of China yuan, Hong Kong dollar, Iran rial, Philippines peso, Singapore dollar, Thailand baht (tical), and Venezuela bolivar

The Federal Reserve Bank of New York, pursuant to section 522(c), Tariff Act of 1930, as amended (31 U.S.C. 372(c)), has certified buying rates for the dates and foreign currencies shown below. The rates of exchange, based on these buying rates, are published for the information and use of Customs officers and others concerned pursuant to part 159, subpart C, Customs Regulations (19 CFR 159, subpart C).

Brazil cruzeiro:	
August 4–11, 1980	$0.0187
August 12–15, 1980	.0182
People's Republic of China yuan:	
August 4–6, 1980	$0.675995
August 7–15, 1980	.679394
Hong Kong dollar:	
August 4, 1980	$0.201694
August 5, 1980	.201776
August 6, 1980	.202347
August 7, 1980	.201735
August 8, 1980	.202061
August 11, 1980	.201857
August 12, 1980	.201979
August 13, 1980	.202245
August 14, 1980	.201918
August 15, 1980	.202143
Iran rial:	
August 4–15, 1980	Not available

Philippines peso:	
August 4–15, 1980	$0. 1327
Singapore dollar:	
August 4, 1980	$0. 468713
August 5, 1980	. 468604
August 6, 1980	. 469814
August 7, 1980	. 469043
August 8, 1980	. 469704
August 11, 1980	. 469484
August 12–15, 1980	. 649814
Thailand baht (tical):	
August 4–15, 1980	$0. 0490
Venezuela bolivar:	
August 4–15, 1980	$0. 2329

(LIQ-3-TRODE)

Dated: August 27, 1980.

G. SCOTT SHREVE
(For Richard Rosettie, Acting
Director, Duty Assessment Division).

(T.D. 80–222)

Bonds

Approval and discontinuance of carriers bonds, Customs form 3587

Bonds of carriers for the transportation of bonded merchandise have been approved or discontinued as shown below. The symbol "D" indicates that the bond previously outstanding has been discontinued on the month, day, and year represented by the figures which follow. "PB" refers to a previous bond, dated as represented by figures in parentheses immediately following, which has been discontinued. If the previous bond was in the name of a different company or if the surety was different, the information is shown in a footnote at the end of the list.

Dated: August 28, 1980.

Name of principal and surety	Date of bond	Date of approval	Filed with district director/area director/amount
Assembly & Distribution Terminals of Oregon, Inc., 2800 N. Going St., Portland, OR; motor carrier; St. Paul Fire & Marine Ins. Co.	June 4, 1980	June 9, 1980	Portland, OR; $25,000

Footnotes at end of table.

Name of principal and surety	Date of bond	Date of approval	Filed with district director/area director/amount
Boston & Woonsocket Express Co., Inc., 1117 River St., Woonsocket, RI; motor carrier; The Aetna Casualty & Surety Co. (PB 10/28/69) D 6/11/80 [1]	June 4, 1980	June 12, 1980	Providence, RI; $25,000
C.O.D.E., Inc., 4800 Colorado Blvd., Denver, CO; motor carrier; Protective Insurance Co. (PB 5/22/78) D 5/22/80 [2]	May 22, 1980	May 23, 1980	El Paso, TX; $25,000
Centennial Truck Lines, Inc., 301 Broadway, Jersey City, NJ; motor carrier; Old Republic Ins. Co.	May 15, 1980	June 18, 1980	Newark, NJ; $50,000
Doral Transport Co., 43 Seapark Dr., St. Catharines, Ontario, Canada; motor carrier; Globe Indemnity Co.	June 3, 1980	June 17, 1980	Buffalo, NY; $25,000
Figol Distributors, Ltd., P.O. Box 6298, Edmonton, AB, Canada; motor carrier; St. Paul Fire & Marine Ins. Co. (PB 4/24/68) D 2/14/77 [3]	Feb. 27, 1980	Mar. 6, 1980	Great Falls, MT; $25,000
First Flight Air Charter, Inc., P.O. Box 371, Romulus, MI; motor carrier; The Aetna Casualty & Surety Co.	July 1, 1980	July 7, 1980	Detroit, MI; $50,000
Freightways, Inc., P.O. Box 5204, Charlotte, NC; motor carrier; Safeco Ins. Co. of America.	Mar. 14, 1980	June 17, 1980	Wilmington, NC; $25,000
Gay Trucking Co., P.O. Box 7179, Savannah, GA; motor carrier; Reliance Ins. Co. (PB 5/1/78) D 5/1/80 [4]	May 1, 1980	May 1, 1980	Savannah, GA; $25,000
Hambel Freight Lines, 4965 S. Howell Ave., Milwaukee, WI; motor carrier; Fidelity & Deposit Co. of MD.	Mar. 27, 1980	May 2, 1980	Milwaukee, WI; $25,000
Holland Southwest, Inc., P.O. Box 1026, Flagstaff, AZ; motor carrier; St. Paul Fire & Marine Ins. Co.	Feb. 27, 1980	May 5, 1980	Laredo, TX; $25,000
Imperial Van Lines, Inc., 2805 Columbia St., Terrance, CA; motor carrier; Fidelity and Deposit Co. of MD. (PB 4/20/77) D 7/6/80 [5]	Apr. 20, 1980	June 6, 1980	Baltimore, MD; $50,000
Kulp and Gordon, Inc., Pothouse Rd., P.O. Box 628, Phoenixville, PA; motor carrier; Western Surety Co.	May 7, 1980	June 17, 1980	Philadelphia, PA; $25,000
Lykes Brothers Steamship Co., 1770 Tchoupitoulas St., New Orleans, LA; water carrier; Hartford Accident and Indemnity Co. (PB 5/1/68) D 6/19/80	Apr. 23, 1980	June 19, 1980	New Orleans, LA; $100,000
A. J. Metler Hauling & Rigging, Inc., P.O. Box 3507, Knoxville, TN; motor carrier; Reliance Ins. Co.	May 1, 1980	May 23, 1980	New Orleans, LA; $25,000
Milne Truck Lines, Inc., 2500 West California Ave., Salt Lake City, UT; motor carrier; Federal Ins. Co. (PB 9/2/76) D 6/11/80 [6]	May 6, 1980	June 12, 1980	Los Angeles, CA; $50,000

Footnotes at end of table.

Name of principal and surety	Date of bond	Date of approval	Filed with district director/area director/amount
Sentry Air Freight Corp., 2970 NW 75th Ave., Miami, FL; Air Freight Forwarder; Investors Ins. Co. of America	Feb. 16, 1979	Dec. 15, 1979	Miami, FL; $50,000
Serv-U-Freight, Inc., P.O. Box 9547, Baltimore, MD; motor carrier; Fidelity & Deposit Co. of MD D 6/10/80	Nov. 24, 1976	Nov. 26, 1976	Baltimore, MD; $25,000
Wales Transportation, Inc., 905 Meyers Rd., Grand Prairie, TX; motor carrier; The Fidelity & Casualty Co. of NY (PB 3/7/75) D 4/7/80 [7]	Mar. 7, 1980	Apr. 7, 1980	Houston, TX; $50,000

[1] Surety is Liberty Mutual Insurance Co.
[2] Principal is Nolte Bros. Truck Line, Inc.; Surety is Reliance Ins. Co.
[3] Surety is Royal Indemnity Co.
[4] Surety is Hartford Accident & Indemnity Co.
[5] Surety is Safeco Ins. Co. of America.
[6] Surety is American Manufacturers Mutual Ins. Co.
[7] Surety is Aetna Casualty & Surety Co.

BON-3-03

GEORGE C. STEUART
(For Alfred G. Scholle, Director,
Carriers, Drawback and Bonds Division).

(T.D. 80-223)

Cotton Textile Products—Restriction on Entry

Restriction on entry of cotton textile products manufactured or produced in Macau

There is published below a directive of August 12, 1980, received by the Commissioner of Customs from the acting chairman, Committee for the Implementation of Textile Agreements, concerning restriction on entry of cotton textile products in categories 333/334/335 manufactured or produced in Macau. This directive amends, but does not cancel, that committee's directive of January 25, 1980 (T.D. 80-73).

This directive was published in the Federal Register on August 15, 1980 (45 F.R. 54392), by the committee.

(QUO-2-1)

Dated: August 28, 1980.

WILLIAM D. SLYNE
(For Richard R. Rosettie, Acting
Director, Duty Assessment Division).

U.S. DEPARTMENT OF COMMERCE,
INTERNATIONAL TRADE ADMINISTRATION,
Washington, D.C., August 12, 1980.

Committee for the Implementation of Textile Agreements

COMMISSIONER OF CUSTOMS,
Department of the Treasury,
Washington, D.C.

DEAR MR. COMMISSIONER: On January 25, 1980, the chairman of the Implementation of Textile Agreements, directed you to prohibit entry for consumption, or withdrawal from warehouse for consumption during the 12-month period beginning on January 1, 1980, and extending through December 31, 1980, of cotton textile products in combined categories 333/334/335, produced or manufactured in Macau, in excess of designated levels of restraint. The chairman further advised you that the levels of restraint are subject to adjustment.[1]

Under the terms of the Arrangement Regarding International Trade in Textiles done at Geneva on December 20, 1973, as extended on December 15, 1977; pursuant to the Bilateral Cotton, Wool and Man-Made Fiber Textile Agreement of March 3, 1975, as amended between the Governments of the United States and Portugal; and in accordance with the provisions of Executive Order 11651 of March 3, 1972, as amended by Executive Order 11951 of January 6, 1977, you are directed to amend, effective on August 18, 1980, the 12-month level established for combined categories 333/334/335 to the amount indicated:

Category	*Adjusted 12-month level of restraint* [2]
333/334/335	75,997 dozen

The actions taken with respect to the Government of Portugal and with respect to the imports of cotton textile products from Macau have been determined by the Committee for the Implementation of Textile Agreements to involve foreign affairs functions of the United States. Therefore, the directions to the Commissioner of Customs, which are necessary to the implementation of such actions,

---

[1] The term "adjustment" refers to those provisions of the Bilateral Cotton, Wool and Man-Made Fiber Textile Agreement of Mar. 3, 1975. As amended between the Governments of the United States and Portugal concerning textile products from Macau, which provide, in part, that: (1) Within the aggregate and group limits, specific levels of restraint may be exceeded by designated percentages; (2) these levels may also be increased for carryover and carryforward up to 11 percent of the applicable category limits; and (3) administrative arrangements or adjustments may be made to resolve minor problems arising in the implementation of the agreement.

[2] The level of restraint has not been adjusted to reflect any imports after Dec. 31, 1970.

fall within the foreign affairs exception to the rulemaking provisions of 5 U.S.C. 553. This letter will be published in the Federal Register.

Sincerely,

ARTHUR GAREL,
Acting Chairman, Committee for the Implementation of Textile Agreements.

(T.D. 80–224)

Cotton Textile Products—Restriction on Entry

Restriction on entry of cotton textile products manufactured or produced in Mexico

There is published below a directive of August 7, 1980, received by the Commissioner of Customs from the acting chairman, Committee for the Implementation of Textile Agreements, concerning restriction on entry of cotton textile products in category 336 manufactured or produced in Mexico. This directive amends, but does not cancel, that committee's directive of December 18, 1979 (T.D. 80–53).

This directive was published in the Federal Register on August 12, 1980 (45 F.R. 53507), by the committee.

(QUO–2–1)

Dated: August 29, 1980.

WILLIAM D. SLYNE
(For Richard R. Rosettie, Acting Director, Duty Assessment Division).

U.S. DEPARTMENT OF COMMERCE,
INTERNATIONAL TRADE ADMINISTRATION,
Washington, D.C., August 7, 1980.

Committee for the Implementation of Textile Agreements

COMMISSIONER OF CUSTOMS,
Department of the Treasury,
Washington, D.C.

DEAR MR. COMMISSIONER: This directive amends, but does not cancel, the directive issued to you on December 18, 1979, by the chairman, Committee for the Implementation of Textile Agreements, concerning imports into the United States of certain cotton and manmade fiber textile products, produced or manufactured in Mexico.

Under the terms of the Arrangement Regarding International Trade in Textiles done at Geneva on December 20, 1973, as extended on December 15, 1977; pursuant to the Bilateral Cotton, Wool and Man-Made Fiber Textile Agreement of February 26, 1979, as amended,

between the Governments of the United States and Mexico; and in accordance with the provisions of Executive Order 11651 of March 3, 1972, as amended by Executive Order 11951 of January 6, 1977, you are directed to prohibit, effective on August 14, 1980, and for the 12-month period beginning on January 1, 1980, and extending through December 31, 1980, entry into the United States for consumption and withdrawal from warehouse for consumption, of cotton, textile products in category 336, produced or manufactured in Mexico and exported on and after January 1, 1980, in excess of 22,075 dozen.[1]

Cotton textile products in category 336 which have been exported to the United States prior to January 1, 1980, shall not be subject to this directive.

Cotton textile products in category 336 which have been released from the custody of the U.S. Customs Service under the provisions of 19 U.S.C. 1448(b) or 1484(a)(1)(A) prior to the effective date of this directive shall not be denied entry under this directive.

A detailed description of the textile categories in terms of TSUSA numbers was published in the Federal Register on February 28, 1980 (45 F.R. 13172), as amended on April 23, 1980 (45 F.R. 27463).

In carrying out the above directions, entry into the United States for consumption shall be construed to include entry for consumption into the Commonwealth of Puerto Rico.

The actions taken with respect to the Government of Mexico and with respect to imports of cotton textile products from Mexico have been determined by the Committee for the Implementation of Textile Agreements to involve foreign affairs functions of the United States. Therefore, these directions to the Commissioner of Customs, which are necessary for the implementation of such actions, fall within the foreign affairs exception to the rulemaking provisions of 5 U.S.C. 553. This letter will be published in the Federal Register.

Sincerely,

ARTHUR GAREL,
Acting Chairman, Committee for the Implementation of Textile Agreements.

(T.D. 80–225)

Cotton Textile Products—Restrictions on Entry

Restriction on entry of cotton textile products manufactured or produced in Mexico

There is published below a directive of May 23, 1980, received by the Commissioner of Customs from the chairman, Committee for the

[1] The level of restraint has not been adjusted to reflect any imports after Dec. 31, 1979. Imports during the period, January through May 1980, have amounted to 10,388 dozen.

326-865 O - 80 - 2

Implementation of Textile Agreements, concerning restrictions on entry of cotton textile products in category 359 manufactured or produced in Mexico. This directive amends, but does not cancel, that committee's directive of December 18, 1979 (T.D. 80–53).

This directive was published in the Federal Register on May 29, 1980 (45 F.R. 36107), by the committee.

(QUO–2–1)

Dated: August 29, 1980.

WILLIAM D. SLYNE
(For Richard R. Rosettie, Acting
Director, Duty Assessment Division).

U.S. DEPARTMENT OF COMMERCE,
INTERNATIONAL TRADE ADMINISTRATION,
Washington, D.C., May 23, 1980.

Committee for the Implementation of Textile Agreements

COMMISSIONER OF CUSTOMS,
Department of the Treasury,
Washington, D.C.

DEAR MR. COMMISSIONER: This directive amends, but does not cancel, the directive issued to you on December 18, 1979, by the chairman of the Committee for the Implementation of Textile Agreements concerning imports into the United States of certain cotton, wool, and manmade fiber textile products, produced or manufactured in Mexico.

Under the terms of the Arrangement Regarding International Trade in Textiles done at Geneva on December 20, 1973, as extended on December 15, 1977; pursuant to the Bilateral Cotton, Wool and Man-Made Fiber Textile Agreement of February 26, 1979, as amended between the Governments of the United States and Mexico; and in accordance with the provisions of Executive Order 11651 of March 3, 1972, as amended by Executive Order 11951 of January 6, 1977, you are directed to prohibit, effective on May 23, 1980, and for the 12-month period beginning on January 1, 1980, and extending through December 31, 1980, entry into the United States for consumption and withdrawal from warehouse for consumption of cotton textile products in category 359, produced or manufactured in Mexico in excess of 543,478 pounds.[1]

The action taken with respect to the Government of Mexico and with respect to imports of manmade fiber textile products from

[1] The level of restraint has not been adjusted to reflect any imports after Dec. 31, 1979.

Mexico has been determined by the Committee for the Implementation of Textile Agreements to involve foreign affairs functions of the United States. Therefore, the directions to the Commissioner of Customs, which are necessary for the implementation of such actions, fall within the foreign affairs exception to the rulemaking provisions of 5 U.S.C. 553. This letter will be published in the Federal Register.

Sincerely,

PAUL T. O'DAY,
Chairman, Committee for the Implementation of Textile Agreements.

(T.D. 80-226)

Foreign Currencies—Daily Rates for Countries Not on Quarterly List

Rates of exchange based on rates certified to the Secretary of the Treasury by the Federal Reserve Bank of New York for the Brazil cruzeiro, People's Republic of China yuan, Hong Kong dollar, Iran rial, Philippines peso, Singapore dollar, Thailand baht (tical), and Venezuela bolivar

The Federal Reserve Bank of New York, pursuant to section 522(c), Tariff Act of 1930, as amended (31 U.S.C. 372(c)), has certified buying rates for the dates and foreign currencies shown below. The rates of exchange, based on these buying rates, are published for the information and use of Customs officers and others concerned pursuant to part 159, subpart C, Customs Regulations (19 CFR 159, subpart C).

Brazil cruzeiro:	
August 18–22, 1980	$0.0182
People's Republic of China yuan:	
August 18, 1980	$0.679394
August 19–20, 1980	.675539
August 21–22, 1980	.675356
Hong Kong dollar:	
August 18, 1980	$0.201837
August 19, 1980	.201979
August 20, 1980	.202000
August 21, 1980	.201552
August 22, 1980	.201939
Iran rial:	
August 18–22, 1980	Not available
Philippines peso:	
August 18–21, 1980	$0.1327
August 22, 1980	.1320

Singapore dollar:	
August 18, 1980	$0.467508
August 19, 1980	.466309
August 20, 1980	.469373
August 21, 1980	.469263
August 22, 1980	.469373
Thailand baht (tical):	
August 18–22, 1980	$0.0490
Venezuela bolivar:	
August 18–22, 1980	$0.2329

(LIQ-3-TRODE)

Dated: September 3, 1980.

G. Scott Shreve
(For Richard Rosettie, Acting
Director, Duty Assessment Division).

Decisions of the United States Court of Customs and Patent Appeals

(C.A.D. 80–3)

ASTRA-SJUCO, A.B., MEDLINE INDUSTRIES, AND CARING INTERNATIONAL DIVISION OF MEDLINE INDUSTRIES *v.* UNITED STATES INTERNATIONAL TRADE COMMISSION AND STERIDYNE CORPORATION

1. SECTION 337, TARIFF ACT OF 1930, AS AMENDED—THERMOMETER SHEATH PACKAGES

Determination of ITC that there was a violation of section 337 of the Tariff Act of 1930, as amended, 19 U.S.C. 1337, by importation and sale of thermometer sheath packages found by the ITC to infringe valid U.S. patents, is affirmed.

2. ID.—INFRINGEMENT—MEANING OF CLAIMS

To determine infringement, the meaning of the claims in issue must be determined by a study of all relevant patent documents, then the claims must be read on the accused structures.

3. ID.—PRESUMPTION OF PATENT VALIDITY

Presumption of patent validity can be overcome only by clear and convincing evidence.

4. EVIDENCE OF COMMERCIAL SUCCESS

Evidence of commercial success, unresolved needs, and failures of others provide indicia of nonobviousness.

5. SUBSTANTIAL INJURY TO THE INDUSTRY

Evidence establishes substantial injury to the industry.

U.S. Court of Customs and Patent Appeals

Appeal from U.S. International Trade Commission, Investigation No. 337–TA–56

[Affirmed.]

Andrew P. Vance, Barnes, Richardson and Colburn, counsel to appellants.

Dana M. Raymond, Allan H. Bonnell and *James J. Maune*, Donohue and Raymond, counsel to Astra-Sjuco A.B.

Gary L. Fairchild, Winston & Straw, counsel to Medline Industries.

Russell N. Shewmaker, General Counsel, *Claude L. Gingrich*, Deputy General Counsel, *Theodore W. Kassinger*, Office of the General Counsel, *N. Tim Yaworski*, of counsel, International Trade Commission.

Richard L. Aitken, Lane, Aitken & Ziems, counsel to Steridyne Corp.

[Oral argument on June 2, 1980, argued by Dana M. Raymond for appellants Astra-Sjuco et al.; Richard L. Aitken for appellee Steridyne Corp.; and N. Tim Yaworski for appellee ITC.]

Before MARKEY, *Chief Judge*, RICH, BALDWIN and MILLER, *Associate Judges*[1] and RE, *Chief Judge*.[1]

BALDWIN, Judge.

[1] This is an appeal from the July 25, 1979, order of the International Trade Commission (Commission) pertaining to investigation No. 337–TA–56, *In the Matter of Certain Thermometer Sheath Packages*. The Commission, with one member dissenting, determined that there was a violation of section 337 of the Tariff Act of 1930, as amended, 19 U.S.C. 1337,[2] by the importation into, and sale in, the United States of certain thermometer sheath packages found by the Commission to infringe certain claims of valid U.S. patents, and ordered that the subject packages be excluded from entry into the United States for the terms of the patents except where such importation is licensed by the patent owner. We affirm.

BACKGROUND

A complaint was filed with the Commission on June 7, 1978, on behalf of Steridyne Corp. (Steridyne), alleging that Astra-Sjuco A.B. (Astra-Sjuco), Medline Industries (Medline), and Caring International Division of Medline (Caring) were violating section 337 by the unauthorized importation and sale of certain thermometer sheath packages alleged to infringe certain claims of U.S. Patent Nos. 3,552,-558 ('558) and 3,847,280 ('280), both issued to George W. Poncy (hereinafter the Poncy patents).

Steridyne is the exclusive licensee under the Poncy patents and manufactures and sells in the United States thermometer sheath packages covered by said patents.

Astra-Sjuco is a Swedish company which supplies the imported sheath packages, marketed under the TempoTek trademark, which it buys under a long-term contract with a Swedish manufacturer,

---

[1] The Honorable Edward D. Re, U.S. Customs Court, sitting by designation.

[2] 19 U.S.C. 1337(a) provides:

(a) *Unfair methods of competition declared unlawful.*

Unfair methods of competition and unfair acts in the importation of articles into the United States, or in their sale by the owner, importer, consignee, or agent of either, the effect or tendency of which is to destroy or substantially injure an industry, efficiently and economically operated, in the United States, or to prevent the establishment of such an industry, or to restrain or monopolize trade and commerce in the United States, are declared unlawful, and when found by the President to exist shall be dealt with, in addition to any other provisions of law, as hereinafter provided.

Devello A.B. (not a party to this action). Medline is the importer of the TempoTek sheath packages and distributes them under its own name and through its Caring division. The TempoTek sheath is made in accordance with U.S. Patent No. 4,051,950 ('950), issued to Harry Jarund, a principal in Devello A.B.

The majority of the Commission determined that the TempoTek sheath falls within claims 1, 4, 5, 8, 9, 13, 15, 16, 17, and 18 of the '558 patent and claims 1, 2, and 5 of the '280 patent. The Commission treated the claims of the '280 patent as though they stand or fall with independent claims 1 and 13 of the '558 patent. Appellants' discussion in its brief also focuses on these claims, which read as follows:

1. A flexible sheath package for clinical tools and instruments comprising:

a. a sheath body of heat sealable material having an open end for the insertion of an instrument;

1. said sheath having a sterilizable exterior surface;

b. a separable, disposable outer cover for said sheath comprising heat sealable material wholly enclosing the outer surfaces of the sheath and sealed thereto on each side at the area of said sheath opening;

1. said cover having a sterilizable interior surface;

c. said sheath being defined by a seal line in the form of a tear seal, said tear seal joining said sheath and said cover together along the line of said seal, thereby enclosing said sheath body within the interior body of said cover; and

d. said outer cover and the waste portions of said sheath material outside of said seal line being separable from said sheath along said tear seal to expose said sheath for clinical use when said instrument is inserted therein.

13. Means for sheathing instruments against transmission of infectious diseases comprising an assembly having:

a. upper and lower layers of material with heat sealable, sterilizable facing surfaces;

b. intermediate layers of heat sealable, sterilizable material disposed between said upper and lower layers;

1. each of said intermediate layers being in contact with the respective adjacent heat sealable facing surface and with each other;

2. each of said intermediate layers being sealed along a marginal portion to its adjacent outer layer;

c. all of said layers being united by a seal defining the outline of the sheath, whereby a sheath is formed by said intermediate layers within the line defining said seal, said line forming a tear seal in said intermediate layers, said sheath having an open end and a closed end;

d. said upper and lower layers being strippable from said sheath and from each other substantially along said tear seal to expose said sheath for clinical use when an instrument is inserted therein.

Claims 1 and 5 of the '280 patent read:

1. A sheath package for surgical instruments and the like comprising superposed laminations of material formed into two separate layers, the inner layer of each lamination forming a sheath for the reception of an instrument, said sheath having an open end and a closed end, the outer portions of each lamination comprising a cover for said sheath, said laminations being joined together by a seal defining said sheath, said seal between said laminations being constructed so that said outer portions are strippable from said sheath along said seal upon the insertion of an instrument into said sheath.

5. A flexible sheath package comprising two flexible layers sealed together along a seal line to define a sheath, a cover enclosing the outer surfaces of said layers within said seal line, the seal between said inner layers being constructed and said cover being fixed to said layers in a manner so that the outer portions of said flexible layers outside of said seal line is torn away from said sheath when said outer layer is peeled from said sheath with an instrument within said sheath.

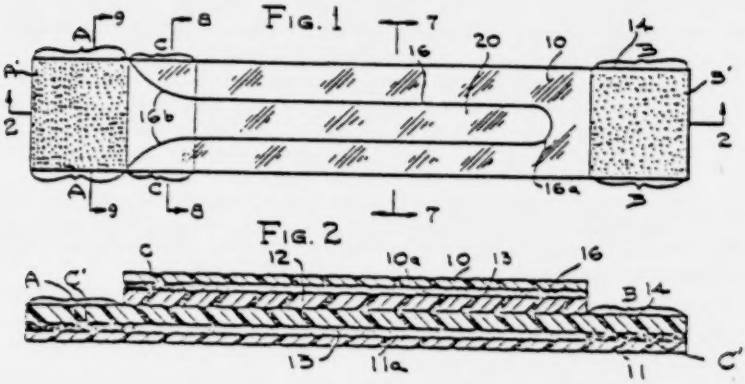

Poncy sheath package as illustrated in the '558 patent

As shown in figures 1 and 2 of the Poncy '558 patent reproduced above, the Poncy sheath package comprises two inner strips 12 and 14 of thin, flexible material and two outer strips 10 and 11 sandwiching said inner strips between said outer strips. The inner strips are joined together by a tear seal along the seal line 16, thus providing a thermometer sheath formed between the two inner strips. The outer cover strips 10 and 11 are releasably sealed to the inner strips along the tear seal line 16. The interior of the sheath 20 is open to the exterior of the

package through the mouth of the sheath so that a thermometer can be readily inserted into the sheath while the sheath is still in the package.

To use the sheath, a thermometer is inserted therein while the sheath is still in the package and the cover strips are then pulled off, leaving the thermometer sheath 20 on the thermometer. The waste material of the inner strips 12 and 14 outside the tear seal line 16 is left attached to the sheath in the sheath package until the cover strips are pulled off, at which time this waste material is automatically torn away from the sheath. The nature of the tear seal formed between the inner two strips is that it is weakened along the center of the seal line 16 so that when the waste material of the inner two strips 12 and 14 is torn away, the tear seal tears down the middle of the tear seal leaving the waste portion of the inner two strips 12 and 14 still joined together along the outer half of the tear seal with the inner half of the tear seal also still joined together to form the sheath 20.

FIG. 1.

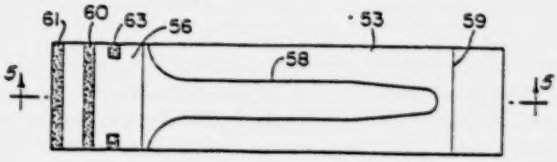

FIG. 2.

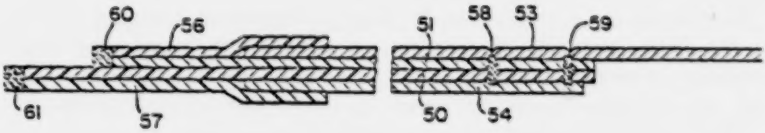

TempoTek sheath package as illustrated in Steridyne's Exhibit CS-9

The imported TempoTek sheath package, as shown in figures 1 and 2 of Steridyne's exhibit CS-9, reproduced above, comprises two inner strips 50 and 51 of thin plastic material which are joined together by a tear seal 58 to form a thermometer sheath in the two inner strips. The two inner strips 50 and 51 are sandwiched between paper cover strips 53 and 54 and are releasably sealed to the paper cover strips

326-865 O - 80 - 3

along the seal line 58. A green plastic end cover strip 56 is sealed to the upper strip 51 in the area of the mouth of the sheath and overlaps the paper cover strip 53. A white plastic end cover strip 57 is sealed to the lower inner strip 50 along the seal 61 and overlaps the paper cover strip 54. To use the TempoTek sheath package, a thermometer is inserted between the plastic strips 56 and 57 into the sheath defined by the tear seal line 58 in the inner strips 50 and 51. The cover strips are then pulled off causing the waste material of the inner strips 50 and 51 outside the seal line 58 to be torn away from the thermometer sheath with the cover strips and leaving the thermometer sheath on the thermometer.

An evidentiary hearing was conducted by a Commission Administrative Law Judge (ALJ), who recommended that the Commission determine that there was no violation of section 337 in the importation and sale in the United States of the TempoTek sheath packages. This recommendation resulted from his conclusion that the subject claims were invalid as obvious under 35 U.S.C. 103 in view of prior art, or, if valid, the subject claims were not infringed. The ALJ also concluded that the importation and sale of the TempoTek sheath had the effect or tendency to injure substantially the domestic industry.

The Commission, with one member dissenting, ordered the exclusion from entry into the United States of the TempoTek sheaths for the terms of the Poncy patents except where properly licensed. The majority determined that there was a violation of section 337 in the importation and sale of the TempoTek sheath packages, based on its conclusions of validity and infringement of the subject claims of the Poncy patents and its conclusion of substantial injury.

ISSUES

The issues are (1) whether the TempoTek sheath infringes claims of the Poncy patents, (2) if infringed, whether the infringed claims are valid in view of prior art, and (3) whether the sale of TempoTek sheaths has resulted in substantial injury to the domestic industry.

OPINION

Patent claims are to be construed in the light of the specification and the prosecution history. *United States* v. *Adams*, 383 U.S. 39, 49, 148 USPQ 479, 482 (1966). **[2]** The determination of patent infringement is a two-step process. First, the meaning of the claims in issue must be determined by a study of all relevant patent documents. Second, the claims must be read on the accused structures. *Autogiro Company of America* v. *United States*, 384 F. 2d 391, 401, 155 USPQ 697, 705 (Ct. Cl. 1967).

The claims in issue, read together with the drawings (see figs. 1 and 2 of the '558 patent and ensuing discussion supra) and the specification, encompass a laminated structure yielding a thermometer sheath package. The '558 specification notes certain objectives of the claimed structure:

> A principle object of the invention, therefore, is to provide, in a sterile, expendable package, a sterile, disposable sheath for such objects as clinical thermometers. Another object is to provide such a package into which a thermometer can readily be inserted by anyone, just prior to use thereof, so that the thermometer enters directly into a transparent sheath which has previously been sterilized and maintained in a sterile condition within the package in those areas which come into contact with the body of a patient, and from which the package can be stripped to expose the sterile sheath, whereupon the sheathed thermometer may be inserted into a body cavity, and a reading subsequently taken therefrom through said sheath, which may then be discarded. * * *
>
> Another object of the invention is to provide a transparent sheath for a thermometer in which the exterior of the sheath is sterilized and is maintained in a sterile condition by its enclosing package, which is also sterilized at those portions which come into contact with the sheath.
>
> A further object is to provide such a device which is disposable and can be mass produced in very substantial quantities in a short space of time at such low cost that is [sic] will be competitive with prior devices and methods for using thermometers and other devices which must be kept sterile in use to prevent contamination of patients.

Infringement

Appellants assert that the subject claims do not read upon the TempoTek package and that the Poncy patents are, therefore, not infringed. We disagree.

Appellants contend that claims 1 and 13 of the Poncy '558 patent are not infringed because the term "sterilizable" as used in these claims should be interpreted as meaning "capable of maintaining the sterility of the packaged sheath" and the TempoTek sheath package does not have this capability. As found by the Commission, that construction of "sterilizable" is a considerable distortion of the plain, commonly accepted meaning of the term, which is "capable of being sterilized." There is nothing in the Poncy specification or in its file history to indicate that "sterilizable" means anything other than "capable of being sterilized," a definition fully applicable to the TempoTek sheath package.

Appellants contend that infringement of claims 1 and 13 of the '558 patent is avoided in the TempoTek package because the facing surfaces of the TempoTek package are not heat sealable. Claim 1 calls for the outer cover to comprise heat sealable material and claim 13

calls for the upper and lower layers, which comprise the cover, to have heat sealable facing surfaces. Appellants assert that the paper used as a cover for the TempoTek package is a thin, relatively porous paper which does not have a heat-sealable or thermoplastic coating thereon.

However, visual inspection of appellants' TempoTek sheath package shows that its cover is sealed to the plastic inner strips along the seal line in the same manner as the cover of the Poncy sheath package. Moreover, the ALJ found, and appellants' own witness admitted, that the cover strips of the TempoTek sheath package are sealed to the inner strips along the seal line. Further, disclosure in the '950 patent covering the TempoTek sheath package states that the cover strips "are removably heat sealed." Because the sealing features of the two embodiments are identical, it is clear that they are both heat sealable within the meaning of claims 1 and 13. Appellants further contend that the test for "heat sealable" is whether or not the material can be heat sealed to itself. However, there is no basis for such a limited meaning of "heat sealable" in the specification of the Poncy patent or in its file history.

Appellants contend that claims 1 and 13 of the '558 patent are avoided because they recite seals which completely enclose the sheath. Claims 1 and 13 have different recitations in this respect. Claim 1 recites a cover which wholly encloses the outer surface of the sheath. The TempoTek sheath is not ensealed in the sheath package, since there is no seal between the green plastic strip 56 and the upper cover strip 53 where they overlap, or between the white end plastic cover strip 57 and the lower paper strip 54, where these two strips overlap (see figs. 1 and 2, TempoTek sheath package supra). Nevertheless, the TempoTek sheath is wholly enclosed by the package cover since the plastic strips 56 and 57 are contiguous with the paper cover strips 53 and 54 where they overlap, respectively. While ensealing the sheath is important from the standpoint of guaranteeing sterility of the sheath when it is provided to the user, wholly enclosing the sheath is important to the Poncy sheath package to prevent the sheath from becoming contaminated by handling of the sheath package, as stated in the specification. The TempoTek sheath, while not ensealed, is wholly enclosed for this identical reason.

Claim 13, rather than reciting a seal which completely encloses the sheath, recites that each of the intermediate layers is sealed along a marginal portion to its adjacent outer layer. In the Poncy sheath, this recitation may be construed to refer to the seal between the intermediate layers at the mouth C and C′, as shown in figure 2 of the '558 patent (reproduced supra), or in the case of the lower intermediate layer, it may be the seal C′ in the area B of the sheath. The seal C′ in

the area B insures that when the cover strips are pulled off, the waste portion of the inner two strips is pulled away with the cover strips. In the TempoTek sheath, as shown in exhibit CS–9 (reproduced supra), the cover strips, in addition to being sealed along their marginal portions at 60 and 61 to the inner strips are also sealed along the marginal portion 59 to the cover strips. The seal between the inner strips or intermediate layers 53 and 54 and the adjacent outer layers at 59 helps insure that the waste material of the inner strips is torn away from the sheath when the cover strips are pulled off as in the case of the seal C′ in the area B of the Poncy sheath. Thus, it is clear that the TempoTek sheath package has each of the intermediate layers sealed along a marginal portion to its adjacent outer layer as required in claim 13.

Appellants contend that claims 1 and 13 of the '558 patent and claims 1 and 5 of the '280 patent are not infringed because these claims require a construction whereby the covers can be separately peeled back from the sheath like a banana. However, as found by the ALJ and the Commission, both the Poncy sheath package and the TempoTek sheath package can be opened either by the method of peeling the strips off one at a time, as recommended for the Poncy sheath package, or by pulling them off simultaneously, as recommended by appellants to the users of their package. As held by the Commission, "strippable" and "peeled," as used in the claims, include any form of wresting away, whether or not the covers are peeled back like a banana or pulled off simultaneously.

Appellants further contend that the TempoTek sheath does not infringe the claims of the Poncy patents because the TempoTek sheath package does not employ the feature of the Poncy sheath package in which the waste material of the inner strips functions as part of the package cover which closes the side edges of the sheath. In the Poncy sheath package, by having the sheath defined by a tear seal in two inner strips of the package, and by having the cover joined to the inner strips along the tear seal, a sheath package is provided in which the sheath can be formed and enclosed in a package in one stroke of a single die surface with the waste portions of the inner strips enclosing the side edges of the sheath. This structure is defined in claim 1, paragraph (c) and claim 13, paragraph (c) of the Poncy '558 patent. The TempoTex sheath employs this feature in the same manner in which it is employed in the Poncy sheath. The ALJ expressly found that there is a tear seal formed between the inner two strips of the TempoTek sheath and this finding was expressly adopted by the Commission.

Accordingly, we agree with the determination of the Commission that the TempoTek sheath infringes certain claims of the Poncy patents.

Validity of the Poncy patents

[3] The '558 and '280 patents are presumptively valid.[3] This presumption can be overcome only by clear and convincing evidence, with the burden of persuasion remaining upon the party asserting invalidity. *Stevenson* v. *International Trade Commission*, 612 F. 2d 546, 550, 204 USPQ 276, 280 (CCPA 1979).

Appellants assert that the Poncy patents are invalid under 35 U.S.C. 103 because the differences between the hermetically-sealed sheath package disclosed therein and the prior art are such that the patented sheath package as a whole would have been obvious at the time the invention was made to a person having ordinary skill in the art. *Graham* v. *John Deere Co.*, 383 U.S. 1, 148 USPQ 459 (1966).

The ALJ found U.S. Patent No. 3,308,940 to Morris (Morris patent) to be the closest prior art reference. The Morris patent discloses a sheath enclosed in a package with the mouth of the sheath open to the exterior of the package to receive a thermometer while the sheath is still in the package just as in the sheath package of the Poncy inventions. The ALJ relied upon U.S. Patent No. 2,998,880 to Ladd (Ladd patent), U.S. Patent No. 3,235,063 to Jarund (Jarund '063 patent), and U.S. Patent No. 2,760,630 to Lakso (Lakso patent), for a disclosure of separately strippable or peelable cover strips with simultaneous removal of waste material outside of the tear seal line.

Appellants do not rely on the Ladd and Lakso patents, but assert that the only difference between the Poncy sheath package and the prior art is that it combines the feature of hermetically sealing the outer sheath surfaces, as disclosed by the Morris patent, with the feature of attaching the covers to the sheath around its perimeter, as disclosed by the Jarund '063 patent, for a cover on one side of the sheath and as illustrated in the Italian patent,[4] for two facing covers to enclose both the top and bottom sheath surfaces.

Appellants' argument that the concept of automatic waste removal with the cover strips is foreshadowed by the Jarund '063 patent and the Italian patent has no basis. In the Jarund patent, the removal of the waste material during the manufacturing process is specifically taught. Appellants provide no explanation how a person of ordinary skill in the art looking at the Jarund patent would have conceived of a sheath package in which waste material is left around the sheath in such a manner that it would be automatically removed when the cover strips are pulled off after a thermometer has been inserted into

[3] 35 U.S.C. 282 provides in part: "A patent shall be presumed valid. Each claim of a patent (whether in independent, dependent, or multiple dependent form) shall be presumed valid independently of the validity of other claims; dependent or multiple dependent claims shall be presumed valid even though dependent upon an invalid claim. The burden of establishing invalidity of a patent or any claim thereof shall rest on the party asserting such invalidity."

[4] Italian Patent No. 511535, granted Jan. 26, 1955, to Soc.a. r.l. E.L.T.O. a Torino.

the sheath. Appellants' reliance on the Italian patent is similarly misplaced. The Italian patent has nothing to do with packaging the gloves that are disclosed therein and, accordingly, the concept of automatic removal of waste material with the cover strips after inserting an instrument in the packaged sheath is not suggested by the disclosure of the Italian patent.

The Commission found that even if, as appellants contend, retaining the waste material in the package were a matter of choice by the manufacturer, it is another matter to design a sheath package structure which incorporates the waste material and contributes to the purpose of the package while removing a manufacturing step which would otherwise increase the product's cost. The Commission further found that the concept of using the waste material as part of the package is not revealed directly by the prior art and is not obvious therefrom. As stated in the specification of the '558 patent, referring to the formation of the tear seal:

> The action of the die (not shown) has the effect of weakening a thermoplastic material along the center of the line 16 of the seal formed by the die so that the plastic portions thereof outside the boundary of the sheath formed by the seal can be torn away, the remaining portions of the thermoplastic material adhering to the strip 11 along the edge of the line formed by the seal.

From this description, it is clear that the waste material functions to enclose the side edges of the sheath.

Indicia of nonobviousness

[4] The ALJ found that there is considerable evidence of commercial success, unresolved needs, and failures of others met by the Poncy sheath package. More specifically, the ALJ found that the Poncy sheath package was the first sheath package to be successfully marketed in the United States and was sought by the buying public and competing or potential manufacturers. The Commission found this evidence demonstrated the unobviousness of the Poncy invention. Appellants contend that the Commission's reliance thereon is improper because there is no evidence in the record of any nexus between the evidence and the claimed invention. The record, however, contains credible uncontroverted evidence showing a nexus. The need for an inexpensive thermometer sheath package to solve the problem of patient infection by clinical thermometers was recognized as early as 1957 when the application for U.S. Patent No. 2,910,174 to Reid was filed in the Patent Office. The Reid patent was followed by numerous other proposals for thermometer sheath packages represented by U.S. Patent No. 2,915,175 to Diamant, U.S. Patent No. 2,969,141 to Katzin, U.S. Patent No. 3,092,252 to Brause et al., the Jarund '063 patent, U.S. Patent No. 3,221,555 to Biber, the Morris patent,

U.S. patent No. 3,215,265 to Welin-Berger, and U.S. Patent No. 3,416,651 to Jarund. These patents show a continuing effort by those working in the art to develop a reliable product to solve the problem of thermometer contamination. These prior proposals were not successful, as evidenced by the fact that it was the Poncy sheath package that was the first sheath package to be successfully marketed in the United States. Thus, a long-felt need for a commercially reliable sheath package existed at the time of the Poncy invention in 1968.

The Poncy sheath package, even though initially marketed by a small company in which the promotion and selling was done by Mr. Poncy himself, was commercially successful and was sought out by the general public, as established by the unsolicited letters in the record of individuals seeking to acquire the product. The fact that the prior sheath packages were not adopted, the fact that the Poncy sheath package had advantages over the prior art proposals which made it a practical product, both from the standpoint of the cost of manufacture and from the standpoint of reliability and simplicity establishes the nexus between the invention and its proven success.

Accordingly, we agree with the determination of the Commission that those claims found infringed are valid.

Double patenting

Appellants maintain that the Poncy '280 patent is void for double patenting. This argument was presented to the ALJ who decided adversely to appellants in his recommended determination. Appellants did not file exceptions to this decision and neither briefed nor argued this issue before the Commission. The issue was not raised before the Commission. Accordingly, we do not reach it. *See Tong Seae Industrial Co. Ltd.* v. *International Trade Commission*, No. 79–38 (CCPA Jan. 7, 1980).

Injury

[5] Appellants assert that the evidence does not establish that the industry has been substantially injured by the importation of the TempoTek sheaths. However, the ALJ specifically found that appellants sell the accused packages in substantially the same units of packaging as Steridyne; appellants have sold the accused packages to customers of Steridyne; appellants have solicited accused package sales from Steridyne's customers, one of which purchased over one million of the accused products in 1978; Steridyne's profitability declined during the time period that the TempoTek sheath packages became established in the United States market; the ratio of appellants' sales to Steridyne's sales in appellants' first year of marketing acheived 40 percent; Steridyne's former western sales representative switched from the patented sheath packages to the accused goods resulting

in lost sales; as a result of losing one of its customers to appellants, Steridyne no longer has the security of a long-term arrangement with that customer under which it was to supply a large volume of sheaths; Steridyne's depressed market posture is exacerbated by the fact that once a customer switches to a new product, it is almost impossible to switch the customer back again; because of appellants' large capacity for producing and selling the accused sheath compared to Steridyne, with only 15 employees and a limited number of dealer distributors, appellants have the capacity to further decrease Steridyne's share of the market, if not destroy Steridyne's business. In the face of these findings of fact clearly supported by the record, appellants still maintain in their brief that there is no evidence that Steridyne has lost a single sale as a consequence of the accused importation. We are persuaded otherwise.

CONCLUSION

We hold that the TempoTek sheath infringes certain claims of the Poncy patent. Appellants have failed to carry their burden of persuasion in asserting the invalidity of those claims. The Commission's affirmative determination of injury to an industry is supported by substantial evidence in the record. Accordingly, the Commission's determination that there was a violation of section 337 in the importation into, and sale in, the United States of certain thermometer sheath packages found to infringe certain claims of valid U.S. patents is *affirmed*.

326-865 O - 80 - 4

Decisions of the United States Customs Court

United States Customs Court

One Federal Plaza
New York, N.Y. 10007

Chief Judge

Edward D. Re

Judges

Paul P. Rao
Morgan Ford
Scovel Richardson
Frederick Landis
James L. Watson
Herbert N. Maletz
Bernard Newman
Nils A. Boe

Senior Judge

Samuel M. Rosenstein

Clerk

Joseph E. Lombardi

Customs Decisions

(C.D. 4868)

ARNOLD PICKLE & OLIVE CO., PLAINTIFF, *v.* UNITED STATES, DEFENDANT

Consolidated Court No. 73-7-01647

Packing Cost

[Judgment for plaintiff.]

(Decided August 13, 1980)

Glad, Tuttle & White (*Robert Glenn White* on the memorandum) for the plaintiff.

Alice Daniel, Assistant Attorney General; *Joseph I. Liebman*, Attorney in Charge, Field Office for Customs Litigation (*Susan Handler-Menahem* on the memorandum), for the defendant.

WATSON, Judge: The trial in this case was limited to the question of the costs of packing certain cucumbers for shipment to the United States in 1971. Plaintiff had previously been granted a partial summary judgment as to the export value of the cucumbers, exclusive of the packing costs. *Arnold Pickle & Olive Co.* v. *United States*, 79 Cust. Ct. 50, C.D. 4712, 435 F. Supp. 921 (1977).

The court is satisfied that plaintiff has proven the packing costs by preponderance of the evidence. The minor flaws emphasized by defendant are tolerable imperfections and not failures of proof. The testimoney of two of the owners of plaintiff, the accountant for Pickle Mex, and the supervisor of the packing was sufficient to prove the costs of labor, supervision, salt, ice, grading machinery and scales, as well as the free availability of well water.

The court adopts the reasonable period of 8 years for depreciation of the weighing scale and, rejecting the calculations based on the partial use of volunteer labor, considers all packing to have been done by paid workers. As a result, the court finds the cost of packing for each truckload entry to be $43.56210 plus, for those entries in which ice was used, the cost of ice set out in plaintiff's exhibit No. 17.

Judgment will be entered accordingly.

(C.D. 4869)

EVVAN IMPORTERS, INC., PLAINTIFF, *v.* UNITED STATES, DEFENDANT

Stabilized Turquoise

Court No. 78-2-00309

SEMIPRECIOUS STONE—STABILIZED TURQUOISE

Low-grade, porous turquoise whose pores were filled with clear plastic remained a semiprecious stone within the meaning of the tariff schedules. The process of stabilization did not make the stones "more than" or "other than" turquoise and did not change them into a manufactured product.

[Judgment for plaintiff.]

(Decided August 13, 1980)

Samuel W. Gilman, for the plaintiff.

Alice Daniel, Assistant Attorney General; *Joseph I. Liebman*, Attorney in Charge, Field Office for Customs Litigation (*Susan C. Cassell*, trial attorney), for the defendant.

WATSON, Judge: This action raises the question of whether stabilized turquoise is a semiprecious stone. The stabilized turquoise involved was low-grade, porous turquoise, mined in Arizona. It was

stabilized by a vacuum process in which its pores were filled with clear plastic. This decreased its tendency to crumble when cut and also gave it a somewhat darker or "wetter" appearance. After stabilization the turquoise was sent to Israel for cutting and polishing.

Upon importation, it was then classified as parts of jewelry under item 740.38 of the Tariff Schedules of the United States (henceforth TSUS) and assessed with duty at the rate of 27½ percent ad valorem. Plaintiff claims that it should be classified as semiprecious stones under item 520.39 of the TSUS and should therefore be assessed with duty at the rate of 2½ percent ad valorem.

Defendant takes the view that the addition of plastic makes the importation more than or other than a semiprecious stone and that it is not considered a semiprecious stone in the trade and commerce of the United States. Defendant's expert witness opined that the application of foreign substances to turquoise made it unnatural and that stabilization by impregnation with plastic made it a manufactured product. Defendant referred to the State laws of those States in which turquoise is an important component of native American jewelry and stressed that those laws consider stabilized turquoise as unnatural.

Plaintiff's expert witness testified that stabilization did not change the basic characteristics of the turquoise stones or their identity as semiprecious stones and was consistent with accepted traditional methods of treating turquoise such as waxing and oiling. Plaintiff also relied on R. Shipley's *Dictionary of Gems and Gemmology* (6th ed.) which stated that "plastic, paraffin, wax, oil, and other substances are often impregnated in turquoise to improve its color." In addition, plaintiff referred to R. Webster's *Gems and Their Sources, Descriptions and Identification*, which states as follows at page 218:

> Specimens of turquoise are sometimes oiled or waxed and are considered commercially acceptable and presumably the method of hardening the soft friable American turquoise by impregnating with colloidal silica is also acceptable.

The court is of the opinion that plaintiff's position is correct as a matter of law and that there is an acceptable range of treatment to which a stone can be subjected without changing its basic identity. In the court's view the guiding principle in this case is that a tariff description by name describes all forms of the named article. *Nootka Packing Co. et al.* v. *United States*, 22 CCPA 464, T.D. 47464 (1935); *T. M. Duche & Sons, Inc., et al.* v. *United States*, 44 CCPA 60, C.A.D. 638 (1957). The use of a foreign substance to strengthen the stone's porous structure is in the nature of a preservation of its essential characteristics and an aid to its use in a conventional manner. To the extent that the stabilization improves its surface color it is a minor

enhancement. In neither respect does stabilization transform or manufacture the stone into something else. A distinction must be made between State laws defining turquoise for the purpose of maintaining the integrity of arts and crafts and tariff laws naming "semiprecious stones" as a category of articles of general commerce. The tariff laws must be read more broadly because they are meant to classify articles in a more diversified context. That is to say, they must take into account the endless variations or modifications to which named articles are reasonably subject. They are not designed to protect or preserve one ideal or traditional form at the expense of another.

To call the importations more than turquoise is mistaken. The case law concept of more than does not mean that more than one substance is present in an object. It means that from the standpoint of functional analysis the object is a combination not adequately described by a particular tariff term. For example, the term "motor" may not include articles which consist of motors and gears or motors and clutches. See *United States* v. *A. W. Fenton Co., Inc.*, 49 CCPA 45, C.A.D. 794 (1962); *United States* v. *Acec Electric Corp.*, 60 CCPA 113, C.A.D. 1091, 474 F. 2d 1009 (1973). Here the impregnated plastic has no divergent functional aspect. In fact, it simply aids in the single normal use of the stone. Its presence, therefore, does not make the stone more than a stone in a functional sense.

If we turn to consider the stone strictly as a mineral substance then the consequence of the insertion of the foreign material is more easily discussed. It would be incorrect to draw an analogy to those cases in which partial ingredients played an important role in the classification of chemical mixtures. See for example, *United States* v. *Aceto Chemical Co., Inc.* 64 CCPA 78, C.A.D. 1186, 553 F. 2d 685 (1977); *United States* v. *Cavalier Shipping Co., Inc.*, 60 CCPA 152, C.A.D. 1103, 478 F. 2d 1256 (1973). In those cases the partial or minute ingredients were themselves described in the tariff schedules and hence their ability to force the remaining ingredients out of the provision where they would normally fit had to be closely considered. Here the defendant would have the classification of the dominant material defeated by an ingredient which is not described in the tariff schedules and has no comparable special claim to importance.

In the court's opinion the best analogy is offered by those cases in which modifications of basic objects or articles did not remove them from eo nomine descriptions. Thus, in *National Lead Co.* v. *United States*, 51 Cust. Ct. 13, C.D. 2407 (1963), the use of cement to make briquettes out of antimony ore did not remove the importation from classification as antimony ore. Nor did the binding together of ground wood charcoal with starch, remove an importation from classification as wood charcoal. *Britton & Co.* v. *United States*, 41 Cust. Ct. 64,

C.D. 2021 (1958). In the same manner the treatment of cedar fence-posts with pigmented wood preservative did not convert them from posts to lumber. *Arthur J. Humphreys, Inc.* v. *United States*, 74 Cust. Ct. 73, C.D. 4588, 394 F. Supp. 1395 (1975), *aff'd*, 63 CCPA 75, C.A.D. 1168 (1976). When, in addition to these analogous situations, it is considered that respected, published authorities in the field of gemmology indicate that impregnation of turquoise with substances intended to harden it and improve its color is a recognized practice, the court's legal conclusion is reinforced by the realities of the trade.

The court concludes that stabilized turquoise remains turquoise, is a semiprecious stone within the meaning of that term, and is properly described as such in item 520.39 of the TSUS.

Judgment will enter accordingly.

(C.D. 4870)

WAY DISTRIBUTORS, INC., PLAINTIFF, *v.* UNITED STATES, DEFENDANT

Sheets of Rubber

Consolidated Court No. 73-4-00943

EXPANDED RUBBER

Rubber which had been expanded by means of a blowing agent was properly classified as expanded rubber even though the signs of expansion were not visible to the naked eye.

INTERPRETATIVE RULE—ADMINISTRATIVE PROCEDURE ACT

A ruling by the Customs Service that defined expanded rubber in terms of the detection of signs of expansion under a magnification of 30 diameters was an interpretative rule, exempt from the notice and comment requirements of 5 U.S.C. 553.

AMERICAN MANUFACTURERS PROTEST

Section 516 of the Tariff Act of 1930 is not the exclusive method by which an American manufacturer may seek to bring about a change in the classification of imported merchandise.

[Judgment for defendant.]

(Decided August 13, 1980)

Doherty and Melahn (*William E. Melahn* and *Robert Emmet Mullin, Jr.*, on the memorandum) for the plaintiff.

Alice Daniel, Assistant Attorney General; *Joseph I. Liebman*, Attorney in Charge, Field Office for Customs Litigation (*Jerry P. Wiskin* on the memorandum), for the defendant.

Murray Sklaroff, amicus curiae.

Lamb & Lerch (*David R. Ostheimer* and *Sidney H. Kuflik* on the memorandum), *amicus curiae.*

WATSON, Judge: This consolidated action challenges the classification of sheets of rubber used for making shoe soles. The imported

products are known by the trade names of Bovinide, Polyflex, Superlite, and Norazell. Bovinide will be used here to refer to all of them. The products were exported from West Germany and entered at the Port of Boston in 1972 and 1974.

The imported sheets were classified as expanded rubber under item 770.80 of the Tariff Schedules of the United States and assessed with duty at the rate of 12.5 percent ad valorem. Plaintiff claims that these sheets should be classified as rubber sheets under item 771.42, dutiable at the rate of 6 percent ad valorem, or, alternatively, as rubber articles not specially provided for under item 774.60, dutiable at the rate of 8.5 percent ad valorem.

Plaintiff also claims that ORR Ruling 202–71, upon which the disputed classification was based, was promulgated in violation of the rulemaking provision of the Administrative Procedure Act, 5 U.S.C. 553. Plaintiff further claims that ORR Ruling 202–71 was issued in violation of section 516 of the Tariff Act of 1930, of which more anon.

The crux of plaintiff's classification claim is the argument that the importations are not expanded rubber, yet the evidence shows that they are expanded by means of a blowing agent albeit to a lesser degree than other expanded rubber. Plaintiff tried to prove that the lesser degree of expansion made them something other than expanded rubber, something assertedly known commercially as semiexpanded, microcellular or semicomparted rubber. However, plaintiff failed to persuade the court that the importation represents a distinctly named commercial product.

The distinctions drawn by plaintiff are entirely matters of gradation in an article with the same general characteristics and uses, i.e., expanded rubber used for shoe soles. Plaintiff failed to prove that use of magnification to detect the regular cellular construction (which is the visual evidence of expansion) was improper or indicates a product distinct for tariff purposes from one whose structural character can be determined with the naked eye.

Apart from its definitional argument plaintiff attacked the classification on procedural grounds. The underlying ORR Ruling 202–71, which set the standard of microscopic enlargement of 30 diameters for the detection of expanded rubber, was composed as a response to a letter written to the Commissioner of Customs by counsel for the Heel and Sole Division of the Rubber Manufacturers Association, Inc. That letter of June 3, 1970, expressed concern with the classification of imported synthetic rubber shoe-soling material and argued that the importations were expanded by the introduction of a blowing agent and were being imported at lower rates of duty than those applicable to expanded synthetic rubber.

According to plaintiff, ORR Ruling 202–71 was a "rule" and the process by which it was composed was "rulemaking," all within the Administrative Procedure Act, 5 U.S.C. 551(4).

As a consequence, plaintiff asserts that ORR Ruling 202–71 is invalid because it was issued without conformity to the requirements of the Administrative Procedure Act, namely, without public notice of the proposed rule in the Federal Register under 5 U.S.C. 553(b) and without affording interested persons an opportunity to participate in the rulemaking under 5 U.S.C. 553(c). Although the defendant does not dispute the general applicability of the terms of the Administrative Procedure Act, it does argue that ORR Ruling 202–71 is an "interpretative rule" which is specifically excepted from the notice and participation requirements by 5 U.S.C. 553(b)A. Defendant's point is well taken. In essence, ORR Ruling 202–71 is the agency's statement of its understanding of the meaning of a specific tariff description. It is an administrative construction of language which is eventually subject to judicial construction and falls squarely within the meaning of interpretation.

This ruling is a typical interpretative rule in that it defines the agency's understanding of the statutory term "expanded rubber." See K. Davis, "Administrative Law Treatise" section 503 at 300–304 (1958). Plaintiff argues that the ruling had a "substantial impact," in that it led to a doubling of its duty payments. It thus seeks to aline itself with cases which measure the "impact" of a rule to determine whether procedural safeguards should be utilized for the making of a rule which might normally be exempt from section 553 notice and comment requirements. See for example, *Pharmaceutical Manufacturers Assn.* v. *Finch*, 307 F. Supp. 858 (D. Del. 1970). However, the court has found no example of the impact test in use for a rule which is unambiguously interpretative and, in addition, no reason to apply it here. Interpretative rules of a strictly definitional nature may have a far greater impact than a definition of expanded "rubber" and still be excluded from the requirements of section 553. See *Eastern Kentucky Welfare Rights Organization* v. *Simon*, 506 F. 2d 1278 (D.C. Cir. 1974). The impact test appears to be a useful device for arriving at the procedures of rulemaking when the rule does not fit easily into one of the section 553 exemptions or, conceivably, as a measure of when common law concepts of elementary fairness are called into play. In any event, the impact should be a drastic one, in which vital interests are affected before the court steps beyond the terms of section 553. See K. Davis, "Administrative Law of the Seventies" section 6.01–7 (1976). The effect of the ruling under consideration is a normal effect of rulings interpreting tariff language and no exceptional factors distinguish it from other rulings. To attribute "substantial impact" to every

ordinary, adverse interpretative ruling would be absurd. Nothing would be left of the necessary exception of interpretative rules from the notice and comment requirements. See K. Davis, "Administrative Law Treatise" section 6.30 at 595 (2d ed. 1978).

Additional arguments by plaintiff were without merit. The fact that this ruling may have reversed a prior ruling is of no consequence. In either event it is an exempt interpretative rule. In making this rule the agency was not required to consult plaintiff nor was it required to avoid communication with those advocating an interpretation adverse to plaintiff. Interested parties may communicate their views to the agency at any time and in any manner not inconsistent with statute or law. The existence of section 516 of the Tariff Act of 1930, which allows an American manufacturer to complain and seek to change the classification of imported merchandise does not mean that section 516 is the only permissible way for American manufacturers to attempt to bring about a change in import classification. Such a restrictive view finds no support in law or legislative history.

For the reasons expressed above the court finds that the classification was substantively and procedurally correct and judgment will enter accordingly.

(C.D. 4871)

BROWNING METALS CORP., PLAINTIFF, *v.* UNITED STATES, DEFENDANT

Coated wire

Court No. 79-8-01340

Wire coated with a plastic material to protect it from the stress of manufacture into springs was properly classified as round wire of alloy steel under item 609.45 of the TSUS rather than under the claimed provision for covered wire of item 642.97. Headnote 1 to part 1 of schedule 6, the part in which the wire was classified, specifically announces the coverage of that part over wire coated for protective purposes.

[Judgment for defendant.]

(Decided August 15, 1980)

Mandel & Grunfeld (*Steven P. Florsheim* on the memorandum) for the plaintiff.

Alice Daniel, Assistant Attorney General; *Joseph I. Liebman,* Attorney in Charge, Field Office for Customs Litigation (*Susan C. Cassell* on the memorandum), for the defendant.

WATSON, Judge: This dispute involves imported stainless steel wire coated with a plastic substance intended to act as a lubricant in the manufacture of the wire into helical springs. The wire was classified

as round wire of alloy steel under item 609.45 of the Tariff Schedules of the United States (TSUS) and assessed with duty accordingly.[1]

Plaintiff claims classification as other wire covered with nonmetallic material under item 642.97 of the TSUS, dutiable at the rate of 8.5 percent ad valorem. Although the claim has some literal plausibility it quickly founders on a crucial headnote relating to the item under which the wire was classified. Headnote 1 to part 2 of schedule 6 states the provisions of part 2 apply to products "whether or not (they) have been subjected to treatments to improve the properties or appearance of the metals or to protect them against rusting, corrosion or other deterioration." The headnote goes on to list a wide variety of treatment including "coating with enamel, paint, lacquer, or other nonmetallic substances * * *." Plaintiff argues for a fine distinction between coatings which protect against the ravages of nature and those which protect against the stresses of manufacture. However, the court does not read this subtle distinction in the headnote and considers it an artificial and strained reading. The simpler and more realistic approach is that the headnote intends to speak of all coatings of a protective nature. It follows that wire coated to protect it from the stresses of manufacture remains correctly classifiable in part 2 of schedule 6 under item 609.45.

The part 3 provision claimed by plaintiff for other wire covered with nonmetallic material must obviously be construed in harmony with the wire provisions of part 2. The headnote under discussion takes care to specifically exclude the items named in the claimed provision from part 2 of schedule 6. But plaintiff has failed to demonstrate why the claimed provision for covered wire would be a more accurate classification of the imported wire. No special or peculiar commercial meaning has been proven which would remove the coated wire from the provision in which it was classified. Obviously, in an abstract and literal sense all coated wire is covered. But such classification for the imported wire would make headnote 1 of part 2 entirely meaningless. For the moment it suffices to say that the wire covered with nonmetallic material of item 642.97 is wire other than that which is coated within the meaning of headnote 1. The implications of specific types or methods of "coating" or "covering" wire will have to be examined in this context as they arise.

For the reasons expressed above, plaintiff's claim must be rejected and judgment issued for the defendant.

[1] 10.5 percent ad valorem plus 0.75 cent per pound on the chromium content in excess of 0.2 percent pursuant to item 607.01 of the TSUS, as prescribed by headnote 4, subpart B, part 2, schedule 6.

Appeal to U.S. Court of Customs and Patent Appeals

APPEAL 80–37.—International Spring Mfg. Co. *v.* United States.—METAL LEAF SPRINGS—SPRINGS AND LEAVES FOR SPRINGS, OF BASE METAL—OTHER—SUITABLE FOR MOTOR VEHICLE SUSPENSION—TSUS. Appeal from C.D. 4862.

In this case leaf springs of base metal were held properly classified by Customs under item 652.88 of the Tariff Schedules of the United States as other springs and leaves for springs, of base metal, and properly assessed with duty at the rate of 9.5 percent ad valorem. Plaintiff-appellee claimed that the merchandise should have been classified under item 652.84 as springs and leaves for springs, of base metal, suitable for motor vehicle suspension, and assessed with duty at the rate of 4 percent ad valorem.

It is claimed that the Customs Court erred in overruling the protest in rendering a judgment for the appellee (defendant below); in not rendering a judgment for appellant (plaintiff below); in dismissing the case; in not finding and holding that the merchandise in issue is properly classifiable under item 652.84 supra; in finding and holding that the merchandise in issue is not suitable for motor vehicle suspension; in finding and holding that there was no evidence that the imported springs were suitable for use in motor vehicle suspension; in not finding and holding that the imported springs are actually, practically, and commercially fit for use in motor vehicle suspension; in finding and holding that the vehicles, in which the merchandise in issue is used, are not motor vehicles for tariff purposes; in not finding and holding that the statutes and regulations dealing with nontariff matters are evidence of the common meaning of the term motor vehicle for tariff purposes; in not finding and holding that the fifth wheel type trailers are similar to automobile truck tractors and function as a single integrated unit when connected to the motive unit.

Decisions of the United States Customs Court

Abstracts

Abstracted Protest Decisions

DEPARTMENT OF THE TREASURY, *August 18, 1980.*

The following abstracts of decisions of the United States Customs Court at New York are published for the information and guidance of officers of the Customs and others concerned. Although the decisions are not of sufficient general interest to print in full, the summary herein given will be of assistance to Customs officials in easily locating cases and tracing important facts.

ROBERT E. CHASEN,
Commissioner of Customs.

DECISION NUMBER	JUDGE & DATE OF DECISION	PLAINTIFF	COURT NO.	ASSESSED	HELD	BASIS	PORT OF ENTRY AND MERCHANDISE
				Par. or Item No. and Rate	Par. or Item No. and Rate		
P80/120	Newman, J. August 12, 1980	Simmon Omega, Inc., et al.	72-3-00591, etc.	Items 722.16, 722.18, 722.34, 722.60, 722.64, 774.60, 657.20, 688.50 and 685.90 Various rates	Item 668.25 Free of duty	Simmon Omega, Inc. v. U.S. (C.D. 4815)	New York Phototypesesetting machines and parts and accessories thereof

P80/121	Boe, J. August 12, 1980	K-Mart Corp.	79-5-00889	Item 737.95 17.5%	Item A737.15 Free of duty pursuant to General Headnote 3(c) of TSUS, authorized by title V of Trade Act of 1974, and Ex. Order No. 11888 of 11/26/75	Agreed statement of facts	Longview (Portland, Oreg.) Models to a scale larger than 1 to 85 produced within Hong Kong

Decisions of the United States Customs Court

Abstracts

Abstracted Reappraisement Decisions

DECISION NUMBER	JUDGE & DATE OF DECISION	PLAINTIFF	COURT NO.	BASIS OF VALUATION	HELD VALUE	BASIS	PORT OF ENTRY AND MERCHANDISE
R80/252	Re, C.J. August 12, 1980	Adorence Co., Inc.	74-11-03269	Export value	Appraised values shown on entry papers less additions included in appraised values to reflect currency revaluation	C.B.S. Imports Corp. v. U.S. (C.D. 4739)	Los Angeles, Long Beach Various articles
R80/253	Re, C.J. August 12, 1980	Korvettes, Division of Arlen Realty & Development Corp.	74-4-01063, etc.	Export value	Appraised values shown on entry papers less additions included in appraised values to reflect currency revaluation	C.B.S. Imports Corp. v. U.S. (C.D. 4739)	New York Various articles
R80/254	Watson, J. August 13, 1980	Sandoz, Inc., et al.	R66/3102, etc.	United States value	U.S. selling prices, less 1% cash discount as determined by Customs officer at time of appraisement; less amounts shown in	U.S. v. Geigy Chemical Corporation et al. (C.A.D. 1155)	New York Benzenoid dyestuffs

					column III of "Schedule of Appraisement and Claims," attached to decision and judgment, which represent profit and general expenses usually made in U.S. on sales of dyestuffs of same class or kind; less costs of transportation and insurance from place of shipment to place of delivery in amounts determined by Customs officer at time of appraisement; divided by 1.40 or such other factor applied by Customs officer, to allow for Customs duties payable on imported dyestuffs.		
R80/255	Newman, J. August 13, 1980	Castelazo & Associates	R69/5975, etc.	United States value	Determined by adding to f.o.b. unit invoice price in Swiss francs converted to a dollar value at rate of exchange in effect at time of entry (the "claimed value"), 53% of difference between claimed value and appraised value	Agreed statement of facts	Los Angeles Machine tools and accessories and parts thereof

DECISION NUMBER	JUDGE & DATE OF DECISION	PLAINTIFF	COURT NO.	BASIS OF VALUATION	HELD VALUE	BASIS	PORT OF ENTRY AND MERCHANDISE
R80/256	Newman, J. August 13, 1980	Charmilles Corp. of America	R70/7424, etc.	United States value	Determined by adding to f.o.b. unit invoice price in Swiss francs converted to a dollar value at rate of exchange in effect at time of entry (the "claimed value"), 53% of difference between claimed value and appraised value	Agreed statement of facts	New York Machine tools and accessories and parts thereof
R80/257	Newman, J. August 13, 1980	Charmilles Corp. of America	R70/8791	United States value	Determined by adding to f.o.b. unit invoice price in Swiss francs converted to a dollar value at rate of exchange in effect at time of entry (the "claimed value"). 53% of difference between claimed value and appraised value	Agreed statement of facts	New York Machine tools and accessories and partsl thereof
R80/258	Newman, J. August 13, 1980	McClary, Swift & Co., Inc.	R70/9460, etc.	United States value	Determined by adding to f.o.b. unit invoice price in Swiss francs converted to a dollar value at rate of exchange in effect at time of entry (the "claimed value"), 53% of difference between claimed value and appraised value	Agreed statement of facts	Seattle Machine tools and accessories and parts thereof

R80/259	Boe, J. August 13, 1980	Charmilles Corp. of America	76-10-02251	United States value	Determined by adding to f.o.b. unit invoice price in Swiss francs converted to a dollar value, for entries covered by schedule A, attached to decision and judgment, at fixed rate of exchange as shown on special customs invoice in entry documents (the "claimed value"), and for entries covered by schedule B, attached to decision and judgment, at rate of exchange in effect at time of entry (the "claimed value"), 53% of difference between claimed value and appraised value	Agreed statement of facts	New York Machine tools and accessories and parts thereof
R80/260 [1]	Boe, J. August 13, 1980	Charmilles Corp. of America	78-4-00649, etc.	United States value	Determined by adding to f.o.b. unit invoice price in Swiss francs converted to a dollar value, at fixed rate of exchange as shown on special customs invoice in entry documents (the "claimed value"), 53% of difference between claimed value and appraised value	Agreed statement of facts	Los Angeles Machine tools and accessories and parts thereof

[1] An order entered on Aug. 13, 1980, vacated and set aside the decision and judgment entered in this action on July 29, 1980 (reappraisement abstract No. R80/230).

International Trade Commission Notices

Investigations by the U.S. International Trade Commission

DEPARTMENT OF THE TREASURY

The appended notices relating to investigations by the U.S. International Trade Commission are published for the information of Customs Officers and others concerned.

R. E. CHASEN,
Commissioner of Customs.

In the Matter of CERTAIN APPARATUS FOR THE CONTINUOUS PRODUCTION OF COPPER ROD	Investigation No. 337-TA-89

Notice to all Parties

Notice is hereby given that a prehearing conference will be held in this case at 9 a.m. on August 26, 1980, in the Dodge Center, room 201, 1010 Wisconsin Avenue NW., Washington, D.C., and the hearing will commence immediately thereafter.

The Secretary shall publish this notice in the Federal Register.

Issued: August 22, 1980.

JANET D. SAXON,
Administrative Law Judge.

In the Matter of CERTAIN HOLLOW-FIBER ARTIFICIAL KIDNEYS	Investigation No. 337-TA-81

Notice of Granting of Motion to Add Terumo Corp. as a Respondent

Upon consideration of Motion Docket No. 81-5, as certified to the Commission by the Administrative Law Judge (ALJ) on July 14, 1980,

and the ALJ's recommendation that the motion be denied, the Commission has ordered that said motion is granted.

Copies of the Commission action and the Commission order are available to the public during official working hours at the Office of the Secretary, U.S. International Trade Commission, 701 E Street NW., Washington, D.C., telephone 202-523-0161.

By order of the Commission.

Issued: August 28, 1980.

KENNETH R. MASON,
Secretary.

In the Matter of CERTAIN AIRTIGHT CAST-IRON STOVES	Investigation No. 337-TA-69

Notice of Extension of Time for Filing Written Comments

I. BACKGROUND

On August 15, 1980, the Commission issued a notice setting the times when comments would be due concerning relief, bonding, and the public interest with regard to several respondents found to be in default by the Administrative Law Judge. See 45 F.R. 55547, August 20, 1980. The time for filing comments by the complainants was August 29, 1980. On August 21, 1980, the complainants filed a motion for extension of time to file their comments (Motion 69-32) asking that their deadline be extended until September 19, 1980. No objections to the motion have been received from any parties.

II. ACTION

Having considered the above motion, the Commission on August 27, 1980, granted Motion 69-32 and ordered the times for filing written comments extended by 3 weeks.

III. ORDER

Accordingly, the Commission orders that—

1. Motion No. 69-32 is granted;

2. The deadline for filing written comments by complainants is extended until September 19, 1980;

3. The deadline for filing written comments is extended until September 26, 1980, for the Commission investigative attorney, other parties, and interested persons;

4. Requests for oral arguments or oral presentations must be made by October 3, 1980;

5. The Secretary shall serve this notice upon all parties of record, upon the interested federal agencies, and shall have this notice published in the Federal Register.

By order of the Commission.

Issued: August 28, 1980

KENNETH R. MASON,
Secretary.

TA-131(b)-5, TA-503(a)-7 and 332-113

Probable Economic Effects of Possible Tariff Reductions Under Section 124 of the Trade Act of 1974 and Designation of Certain Articles as Eligible Articles for purposes of the Generalized System of Preferences

AGENCY: U.S. International Trade Commission.

ACTION: In accordance with the provisions of section 131(b) and 503(a) of the Trade Act of 1974 (hereinafter referred to as the act) and section 332(g) of the Tariff Act of 1930, as amended, the Commission has instituted investigations Nos. TA-131(b)-5, TA-503(a)-7, and 332-113 for the purpose of obtaining, to the extent practicable, information of the kind described in section 131(d) of the act. This information is for use in connection with the preparation of advice requested by the U.S. Trade Representative (USTR) with respect to certain listed articles as to the probable economic effects on U.S. industries producing like or directly competitive articles and on consumers of (1) possible concessions on certain listed articles under the residual tariff reduction authority granted to the President under section 124 of the act or continuance of duty-free treatment if the existing rate of duty is free, and (2) the elimination of U.S. import duties under the U.S. Generalized System of Preferences (GSP).

EFFECTIVE DATE: August 20, 1980.

FOR FURTHER INFORMATION CONTACT: (1) Agricultural products, Mr. Edward Furlow, 202-523-0234; (2) textile products, Mr. Reuben Schwartz, 202-523-0114; (3) chemical products, Dr. Aimison Jonnard 202-523-0423; (4) minerals and metals, Mr. Larry Brookhart 202-523-0275; (5) machinery and equipment, Mr. Aaron Chesser 202-523-0353; (6) miscellaneous manufactures, Mr. Selma Coble 202-523-0103; Office of Industries, U.S. International Trade Commission, 701 E Street NW., Washington, D.C. 20436; (7) legal aspects, Mr. William Gearhart, 202-523-0487, Office of General Counsel, at the same address.

SUPPLEMENTARY INFORMATION: On August 5, 1980, in accordance with section 131(a) and 503(a) of the act and pursuant to

the authority of the President delegated to the USTR by Executive Order 11846, as amended by Executive Order 11947, the USTR furnished the U.S. International Trade Commission with lists of articles which are being considered for (1) possible concessions under the residual tariff reduction authority of section 124 of the act or continuance of duty-free treatment, or (2) designation as eligible articles for purposes of the GSP set forth in title V of the act. The USTR published the lists of articles in the August 8, 1980 Federal Register (45 F.R. 52978). A notice correcting errors in the August 8, 1980, notice was published in the Federal Register of August 20, 1980 (45 F.R. 55556). Copies of the lists are available upon request from the Secretary at the Commission's office in Washington, D.C.

Section 504(d) of the act exempts from one of the competitive-need limits in section 504(c) articles for which no like or directly competitive article was being produced in the United States on the date of enactment of the act. Accordingly, pursuant to the authority of section 332(g) of the Tariff Act of 1930, as amended (19 U.S.C. 1332(g)), and in conformity with the delegation of authority from the President to him of Executive Order 11846 as amended by Executive Order 11947, the USTR requested that the Commission also provide advice with respect to whether products like or directly competitive with any products described in the attached tariff categories were being produced in the United States on Janaury 3, 1975.

PUBLIC HEARING: A public hearing in connection with the investigation will be held in the Commission Hearing Room, 701 E Street NW., Washington, D.C. 20436, beginning at 10 a.m., e.s.t., on November 5, 1980, to be continued on November 6 and 7, 1980, if required. All persons shall have the right to appear by counsel or in person, to present information, and to be heard. Requests to appear at the public hearing should be filed with the Secretary, U.S. International Trade Commission, 701 E Street NW., Washington, D.C. 20436, not later than noon, October 28, 1980.

WRITTEN SUBMISSIONS: In lieu of or in addition to appearances at the public hearing, interested persons are invited to submit written statements concerning the investigation. All written statements, including prepared statements filed by witnesses at the public hearing, should include a summary of material included in the statement. Commercial or financial information which a submitter desires the Commission to treat as confidential must be submitted on separate sheets of paper, each clearly marked "Confidential Business Information" at the top. All submissions requesting confidential treatment must conform with the requirements of section 201.6 of the Commission's Rules of Practice and Procedure (19 CFR 201.6). All written submissions, except for confidential business information, will be

made available for inspection by interested persons. To be insured of consideration by the Commission, written statements should be submitted at the earliest practicable date, but no later than November 18, 1980. All submissions should be addressed to the Secretary at the Commission's office in Washington, D.C.

By order of the Commission.

Issued: August 22, 1980.

KENNETH R. MASON,
Secretary.

(19 CFR 207.40)

Notice of Termination of Countervailing Duty Investigation Concerning Certain Steel Products from Italy

AGENCY: U.S. International Trade Commission.

ACTION: Termination of countervailing duty investigation under section 704(a) of the Tariff Act of 1930 and section 104(b)(1) of the Trade Agreements Act of 1979, with regard to certain steel products from Italy.

EFFECTIVE DATE: August 26, 1980.

FOR FURTHER INFORMATION CONTACT: Mr. Dan Leahy, Office of Investigations, telephone 202-523-1369.

SUPPLEMENTARY INFORMATION: The Trade Agreements Act of 1979, subsection 104(b)(1), requires the Commission in the case of a countervailing duty order issued under section 303 of the Tariff Act of 1930, upon the request of a government or group of exporters of merchandise covered by the order to conduct an investigation to determine whether an industry in the United States would be materially injured, threatened with material injury or that the establishment of such industry, would be materially retarded if the order were to be revoked. On March 27, 1980, the Commission received requests from the Societa Anonima Elettrificazione S.p.a. and from the delegation of the Commission of the European Communities for the review of outstanding countervailing duty orders on galvanized fabricated structural steel units for the erection of electrical transmission towers (T.D. 67-102) and certain steel products: fabricated structural steel units for the erection of electrical transmission towers, not galvanized (T.D. 69-113).

On June 13, 1980, the Commission was notified by letter that United States Steel, the original petitioner in these countervailing duty orders wished to withdraw its petition on certain steel products (T.D. 69-113) as to all of the nine product groups covered by that order pursuant to section 704(a) of the Tariff Act of 1930.

While there is no provision in the Trade Agreements Act of 1979, or in its legislative history, permitting termination of a transition case investigation, termination of a properly instituted countervailing duty investigation is permitted under section 704(a). That section directs the Commission to solicit public comment prior to termination and approve such termination only if it is in the public interest. Since termination is permitted in cases based on newly filed countervailing duty petitions, it should also be permitted as to existing countervailing duty orders.

On July 9, 1980 (45 F.R. 46262 (July 9, 1980)), the Commission published a notice in the Federal Register requesting public comment by August 8, 1980, on the proposed termination of the Commission investigation on certain steel products from Italy (T.D. 69–113). No adverse comments were received in response to the Commission's notice.

Pursuant to section 704(a) of the Tariff Act of 1930 the Commission is therefore terminating its investigation under section 104(b)(1) of the Trade Agreements Act of 1979 on certain steel products from Italy (T.D. 69–113) which includes the following nine product groups:

Commodity:

1. Steel pipes for penstocks, even armored, of the type used for hydroelectric installations.
2. Cables, ropes, plaits, and such in iron or steel wire, with or without core of other materials, excluding those insulated for electricity; except as stated below: Galvanized steel wire rope, and stainless steel aircraft cable.
3. Staples in strip form.
4. Nails of iron or steel.
5. Bolts and nuts of iron or steel except as noted below: Galvanized nuts.
6. Rivets of iron or steel.
7. Forged steel grinding balls.
8. Wheels and axles of vehicles for railroads.
9. Iron and steel constructions and their parts, such as pieces for bridges, steel structural works, gates, frameworks, etc., not galvanized.

In addition to publishing this Federal Register notice, the Commission is serving a copy of this notice on all persons who have written the agency in connection with this investigation and is also notifying the Department of Commerce of its action in this case.

By order of the Commission:

Issued: August 27, 1980.

KENNETH R. MASON,
Secretary.

In the Matter of CERTAIN APPARATUS FOR THE CONTINUOUS PRODUCTION OF COPPER ROD	Investigation No. 337-TA-89

Order

Pursuant to my authority as Chief Administrative Law Judge of this Commission, I hereby designate Administrative Law Judge Janet D. Saxon as Presiding Officer in this investigation.

The Secretary shall serve a copy of this order upon all parties of record and shall publish it in the Federal Register.

Issued: August 18, 1980.

DONALD K. DUVALL,
Chief Administrative Law Judge.

In the Matter of CERTAIN SHELL BRIM HATS	Investigation No. 337-TA-86

Notice

Notice is hereby given that a hearing shall be held at 10 a.m., September 23, 1980, in suite 201, 1010 Wisconsin Avenue, Washington, D.C., for the purpose of hearing arguments and testimony regarding complainant's motion for default (motion docket No. 86-1).

The Secretary shall serve a copy of this notice upon all parties of record and shall publish it in the Federal Register.

Issued: August 19, 1980.

DONALD K. DUVALL,
Presiding Officer.

In the Matter of CERTAIN APPARATUS FOR THE CONTINUOUS PRODUCTION OF COPPER ROD	Investigation No. 337-TA-89

Notice Concerning Procedure for Submission of Information on Public Interest Factors

Notice is hereby given that oral presentations concerning remedy, bonding, and the public interest considerations, which factors the Commission is to consider in the event it determines relief should be granted, will be heard beginning at 9 a.m. on September 5 in room 201, 1010 Wisconsin Avenue NW., Washington, D.C. 20007. Written

submissions on these questions may be submitted at any time until that date.

If oral presentations are made, participants will have the option of presenting the statement of a witness under oath, subject to cross-examination, or making an oral statement of position, not under oath, and not subject to cross-examination.

In the oral presentations all parties, interested persons, and government agencies will be limited in their presentations to no more than 15 minutes, not including cross-examination, if there is cross-examination. Each participant will be permitted an additional 5 minutes for closing arguments after all oral presentations have been concluded. Requests for permission to make oral presentations of positions should be filed, in writing, with the Secretary of the Commission at his office in Washington no later than close of business, August 29, 1980.

The Secretary shall publish this notice in the Federal Register.

Issued: August 18, 1980.

JANET D. SAXON,
Administrative Law Judge.

In the Matter of CERTAIN HEADBOXES AND PAPERMAKING MACHINE FORMING SECTIONS FOR THE CONTINUOUS PRODUCTION OF PAPER AND COMPONENTS THEREOF	Investigation No. 337-TA-82

Notice of Termination

Upon consideration of the presiding officer's recommendation and the record in this proceeding, the Commission is ordering the termination of investigation No. 337-TA-82, certain headboxes and papermaking machine forming sections for the continuous production of paper and components thereof, as to respondent Procter & Gamble, by granting motion docket No. 82-8 by Procter & Gamble.

The order is effective as of August 21, 1980.

Any party wishing to petition for reconsideration of the Commission's action must do so within 14 days of service of the Commission order. Such petitions must be in accord with Commission rule 210.56 (19 CFR 210.56).

Copies of the Commission's action and order and any other public documents in this investigation are available to the public during official working hours (8:45 a.m. to 5:15 p.m.) in the Office of the Secretary, U.S. International Trade Commission, 701 E Street NW., Washington, D.C. 20436, telephone 202-523-0161.

Notice of the institution of this investigation was published in the Federal Register of April 8, 1980 (45 F.R. 23832).

By order of the Commission.

Issued: August 21, 1980.

KENNETH R. MASON,
Secretary.

In the Matter of CERTAIN APPARATUS FOR THE CONTINUOUS PRODUCTION OF COPPER ROD	Investigation No. 337-TA-89

Notice to all Parties

Notice is hereby given that a prehearing conference will be held in this case at 9 a.m. on August 29, 1980, in the Dodge Center, room 201, 1010 Wisconsin Avenue NW., Washington, D.C.

Notice is also given that the hearing in this proceeding will commence at 9 a.m. on September 2, 1980, in the Dodge Center, room 201, 1010 Wisconsin Avenue NW., Washington, D.C.

The Secretary shall publish this notice in the Federal Register.

Issued: August 18, 1980.

JANET D. SAXON,
Administrative Law Judge.

(19 CFR Part 207)

Advance Notice of Proposed Rulemaking

On August 19, 1980, a version of the enclosed notice with several errors was sent to persons on the Commission's mailing list. The enclosed version of the notice will appear in the Federal Register.

KENNETH R. MASON,
Secretary.

(19 CFR, Part 207)

Advance Notice of Proposed Rulemaking

AGENCY: U.S. International Trade Commission.

ACTION: This is an advance notice of proposed rulemaking.

SUMMARY: On December 26, 1979, the Commission published final rules to implement the extensive changes in the U.S. counter-

vailing duty and antidumping laws required by the Trade Agreements Act of 1979 (19 CFR 207, 44 F.R. 76457). These final rules set forth procedures for the conduct of Commission investigations under sections 303 and title VII of the Tariff Act of 1930 (19 U.S.C. 1303 and 1641–1677), and sections 102–107 of the Trade Agreements Act of 1979, Public Law 96–39, 93 Stat. 144. On the basis of the administrative experience with these rules since January 1, 1980, the Commission is considering proposing amendments in specific areas more fully described in the supplementary information portion of this notice. Prior to proposing specific amendments, the Commission is soliciting suggestions for the contents of proposed rules in order to take into consideration public comments suggesting changes in the provisions in these rules.

DATE: Comments and suggestions concerning the proposed rulemaking should be submitted on or before (45 days after the publication of this notice in the Federal Register).

ADDRESS: Comments and suggestions concerning the proposed rulemaking should be submitted to the Secretary, U.S. International Trade Commission, 701 E Street NW., Washington, D.C. 20436.

FOR FURTHER INFORMATION CONTACT: Edward Easton, Office of the General Counsel, U.S. International Trade Commission, 701 E Street NW., Washington, D.C. 20436, telephone 202–523–0379.

SUPPLEMENTARY INFORMATION: Subpart A of part 207 contains general rules applicable to all Commission investigations under section 303 and title VII of the Tariff Act and sections 102 through 107 of the Trade Agreements Act. In addition, subpart A implements provisions of title X of the Trade Agreements Act which relate to judicial review of Commission actions. These rules concern definitions of key terms, the service of documents, the maintenance of and administrative record, maintenance and certain records of ex parte meetings, progress reports concerning Commission investigations, limited disclosure of certain confidential information under protective order, Commission questionnaries and subpenas, and determinations by an evenly divided Commission.

Section 207.3, concerning the service of documents, requires that any party submitting a document for inclusion in the record of the investigation serve copies of the document on all other parties to the investigation. Commission rules do not require the filing of a certificate of service, however, and the Commission is considering an amendment to require that a certificate of service be filed for the record.

Section 207.7, concerning the limited disclosure of certain confidential information under protective order, does not permit in-house

counsel access to confidential information. This exclusion has been criticized by the law departments of many firms and by many professional associations. The Commission is considering an amendment to give access to confidential information under protective order to only those counsel, both in-house and retained, who do not advise their firm's or their client's operating departments and who, therefore, would not be in a position where knowledge of a competitor's confidential information gained under protective order would be relevant to other areas of counsel's endeavor. Under the proposed rule counsel seeking access to confidential information under Commission protective orders would have to sign a statement to this effect.

Subpart B of part 207 provides a procedural framework for preliminary investigations under section 303 and title VII of the Tariff Act. These rules concern the filing of petitions, the contents of petitions, notice of initiation of preliminary investigations by the Director of Operations, termination of preliminary investigation by the Department of Commerce, submission of written statements and attendance at a conference, a recommendation to the Commission by the Director of Operations, the Commission's determination, and a notice of the Commission's preliminary determination.

Sections 207.13 and 207.15 of these rules concern the delegation of the conduct of preliminary investigations to the Director of Operations. Section 207.16 concerns the recommendation of the Director to the Commission concerning the disposition of the case. Prior to their promulgation, these rules were criticized in their proposed state. Criticisms included fears that parties would be deprived of an opportunity to make effective oral presentations to the agency and that the Commission would rely excessively on its staff instead of exercising its own judgment in making preliminary determinations. The Commission is interested in whether the public considers the delegation a successful practice and whether the Commission ought to continue the practice.

Subpart C of part 207 provides procedures for final determinations in antidumping and countervailing duty investigations. These rules include provisions for a notice of investigation, the placing of a nonconfidential staff report on the public record before a hearing, the submission of prehearing statements, appearances at and conduct of public hearings, posthearing submissions, the Commission determination, factors considered by the Commission in making a determination, the standard for the Commission's determination, and the publication of a notice of the final determination.

Section 207.22 provides criteria for the filing of prehearing statements. Another Commission rule, section 201.12(d) provides that "Copies of witness' prepared statements should be filed with the Office

of the Secretary of the Commission not less than 3 business days prior to the hearing * * *" (19 CFR 201.12(d) as amended at 44 F.R. 76476, December 26, 1979). The purpose of section 201.12(d) is to give Commissioners time before a hearing within which to review the prepared statements. The large number of investigations being conducted since January 1, 1980, has required that section 201.12(d) be waived in investigations currently scheduled. The waiver of the requirement for filing prepared testimony has led to surprise at several hearings when materials not given a significant treatment in prehearing statements were instead filed as prepared testimony. The policy of the Commission shall continue to be to reject prepared testimony which goes beyond matters raised in prehearing briefs and to continue to require that parties disclose the nonconfidential information and arguments which they believe relevant to the Commission's determination in their prehearing statements. With respect to the deadline for filing witnesses' statements, however, the rule has been waived in most of the antidumping and countervailing duty investigations conducted since January 1, 1980, and this indicates that it may not be appropriate for these investigations. Comments are solicited as to whether these rules require further clarification or change.

Subpart D contains rules for implementing sections 102, 103, and 104 of the Trade Agreements Act with respect to preexisting countervailing duty orders and antidumping and countervailing duty investigations pending as of January 1, 1980, the effective date of the Trade Agreements Act.

At the time the Commission promulgated regulations for this subpart, the Commission did not anticipate that domestic industries which had successfully petitioned for countervailing duty orders prior to the enactment of the Trade Agreements Act might not wish to participate in a Commission investigation concerning material injury under section 104 of the act. Inasmuch as section 104 was drafted for the purpose of making the enforcement of countervailing duty orders issued prior to January 1, 1980, which were not subject to the material injury requirement imposed by section 701 of the Tariff Act, consistent with orders issued after that date, the Commission has invoked the authority of section 704 of the Tariff Act to terminate investigations under section 104 upon the request of the original petitioner to withdraw its petition. This discretion to terminate cases under section 704 has been applied on an ad hoc basis. The Commission is considering proposing a regulation to terminate section 104 investigations similar in content to section 207.40(a) of the current rules.

Subpart E contains rules for the termination and suspension of antidumping and countervailing duty investigations and investiga-

tions to review outstanding determinations and to reopen investigations.

After reaching its determination in investigation No. AA1921-145A (Review), *Electric Golf Cars from Poland* (45 F.R. 39581, June 11, 1980), the Commission decided to propose amendments to section 207.45, the rule which implements section 751 of the Tariff Act which, in turn, authorizes review investigations. The Federal Register notice of this proposed rulemaking was published on August 14, 1980 (45 F.R. 54086). The period for public comment on the proposed amendments to section 207.45 will close on September 15, 1980.

Public comments are solicited on these matters and any other aspect of the conduct of antidumping and countervailing duty investigations by the Commission.

By order of the Commission.

Issued: August 20, 1980.

KENNETH R. MASON,
Secretary.

Investigation No. 731-TA-4 (Final)

COUNTERTOP MICROWAVE OVENS FROM JAPAN

Notice of Change of Date of Public Hearing

Notice is hereby given that the hearing in this investigation will be held beginning at 10 a.m., e.s.t., Tuesday, December 9, 1980, in the Commission's Hearing Room, U.S. International Trade Commission Building, 701 E Street NW., Washington, D.C. 20436. A hearing date of October 16, 1980, had previously been announced in the Commission's notice of institution of the investigation as published in the Federal Register of July 30, 1980 (45 F.R. 50685). The Commission's hearing has been rescheduled as a result of the postponement by the U.S. Department of Commerce of its final determination as to the question of whether countertop microwave ovens from Japan are being, or are likely to be, sold in the United States at less than fair value.

The Commission will prepare and place on the record by November 18, 1980, a staff report containing preliminary findings of fact, the public portion of which will be made available to interested persons. All persons desiring to appear at the Commission's hearing and make oral presentations must file prehearing statements on or before December 3, 1980, and should attend a prehearing conference to be held at 10 a.m., e.s.t., on December 2, 1980, in room 117 at the U.S. International Trade Commission Building. Requests to appear at the Commission's hearing should be filed in writing with the Secre-

tary to the Commission not later than close of business (5:15 p.m., e.s.t.), December 3, 1980. For further information concerning the conduct of the investigation, hearing procedures, and rules of general application, consult the Commission's Rules of Practice and Procedure, part 207, subpart C (19 CFR 207), and part 201, subparts A through E (19 CFR 201).

By order of the Commission.

Issued: August 20, 1980.

KENNETH R. MASON,
Secretary.

In the Matter of CERTAIN HOLLOW-FIBER ARTIFICIAL KIDNEYS	Investigation No. 337-TA-81

Notice of Denial of Motion to Amend to Add a Contract Claim to the Notice of Investigation

Upon consideration of motion docket No. 81-1, as certified to the Commission by the Administrative Law Judge (ALJ) on June 5, 1980, and the ALJ's recommendation that the motion be granted, the Commission has ordered that said motion is denied.

Copies of the Commission action and Commission order are available to the public during official working hours at the Office of the Secretary, U.S. International Trade Commission, 701 E Street NW., Washington, D.C., telephone 202-523-0161.

By order of the Commission.

Issued: August 22, 1980.

KENNETH R. MASON,
Secretary.

(332-73)

Notice of Release for Public Comment of U.S. Administration Draft Comments on Draft Chapter of the Harmonized Commodity Description and Coding System

AGENCY: U.S. International Trade Commission.

ACTION: Release for public comment, pursuant to Commission investigation No. 332-73, under the authority of section 332(g) of the Tariff Act of 1930, as amended, of a draft of, and draft U.S. comments on, the following chapter of the Harmonized Commodity Description and Coding System.

Chapter 83: Miscellaneous articles of base metal.

WRITTEN SUBMISSIONS: Parties wishing to submit written comments should do so by August 29, 1980.

COPIES OF DOCUMENTS: Copies of the draft chapter and draft U.S. comments thereon which are the subject of this notice are available for public inspection at the offices of the Commission, 701 E Street NW., Washington, D.C. 20436, or at 6 World Trade Center, New York, N.Y. 10048. The Commission will also send copies to interested parties upon request.

FOR FURTHER INFORMATION CONTACT: Eugene A. Rosengarden, Director, Office of Tariff Affairs, U.S. International Trade Commission, 701 E Street NW., Washington, D.C. 20463; telephone 202-523-0370.

SUPPLEMENTARY INFORMATION: The purpose of this notice is to obtain the comments and views of interested parties with respect to the above mentioned draft chapter of the Harmonized Commodity Description and Coding System, and of the draft U.S. comments thereon.

This notice is being issued pursuant to Commission investigation No. 332-73, instituted on January 31, 1975 (40 F.R. 6329), under section 332(g) of the Tariff Act of 1930. The investigation was initiated in accordance with section 608(c) of the Trade Act of 1974, which provides, in part, that the Commission shall institute an investigation which would provide the basis for—

> (2) full and immediate participation by the U.S. International Trade Commission in the U.S. contribution to technical work of the Harmonized Systems [sic] Committee under the Customs Cooperation Council to assure the recognition of the needs of the U.S. business community in the development of a Harmonized Code reflecting sound principles of commodity identification and specification and modern producing methods and trading practices * * *.

The Harmonized Commodity Description and Coding System (Harmonized Code) is being developed by the Customs Cooperation Council (CCC), an 80-member international organization with headquarters in Brussels, as an international commodity classification system which will be adaptable for modernized customs tariff nomenclature purposes and for recording, handling, and reporting of transactions in international trade. The Harmonized Code will be based on, and in many respects will be an extension of, the Customs Cooperation Council Nomenclature (CCCN), formerly known as the Brussels Tariff Nomenclature (BTN).

Currently, the technical team working under auspices of the CCC prepares drafts of the various chapters of the Harmonized Code for

consideration by the Harmonized System Committee, which was established in order to develop the code. These drafts are forwarded to the members and observers of the Committee for their review and submission of written comments. The Committee meets three times a year to consider these drafts and the written comments and presentations of the various delegations. The review of a particular chapter or group of chapters may extend to more than one meeting.

In 1971, the Department of the Treasury established an Interagency Advisory Committee on Customs Cooperation Council Matters in order to provide a basis for interested Federal agencies to participate with respect to CCC matters. In order to establish and develop U.S. programs and policies with respect to the Harmonized Code, the interagency committee has instituted procedures which take into account the provisions of section 608(c) of the Trade Act of 1974, which call for the Commission to contribute to the U.S. technical input to the Harmonized System Committee. Under these procedures the Commission is preparing technical comments and proposals on the various chapters of the Harmonized Code for consideration by the interagency committee in the determination of U.S. proposals with respect to the Harmonized Code. In making proposals, the Commission is seeking and taking into consideration the views of trade and industry and other interested parties and of interested Government agencies.

The draft U.S. comments on the chapter of the Harmonized Code released for public comment today relate specifically to the technical team draft of this chapter and should be read in conjunction therewith.

In its public notices of May 4, 1976 (41 F.R. 18716 of May 6, 1976), August 9, 1976 (41 F.R. 34370 of Aug. 13, 1976), December 20, 1976 (41 F.R. 55948 of Dec. 23, 1976), September 1, 1977 (42 F.R. 44852 of Sept. 7, 1977), February 7, 1978 (43 F.R. 5902 of Feb. 10, 1978), October 16, 1978 (43 F.R. 48723 of Oct. 19, 1978), February 14, 1979 (44 F.R. 10435 of Feb. 20, 1979), May 16, 1979 (44 F.R. 29740 of May 22, 1979), September 5, 1979 (44 F.R. 53112 of Sept. 12, 1979), January 28, 1980 (45 F.R. 7648 of Feb. 4, 1980), February 1, 1980 (45 F.R. 8168 of Feb. 6, 1980), May 20, 1980 (45 F.R. 36231 of May 29, 1980), and May 23, 1980 (45 F.R. 36230 of May 29, 1980), the Commission identified those chapters which have been considered thus far by the Harmonized System Committee, and the chapters for which a technical team draft has been released.

By order of the Commission.

Issued: August 20, 1980.

KENNETH R. MASON,
Secretary.

Index

U.S. Customs Service

Treasury decisions: T.D. No.

Daily rates for countries not on quarterly list 80–221
Carriers Bonds 80–222
Cotton textile products—restrictions on entry 80–223
Cotton textile products—restrictions on entry 80–224
Cotton textile products—restrictions on entry 80–225
Daily rates for countries not on quarterly list 80–226

U.S. Court of Customs and Patent Appeals: C.A.D. No.

Astra-Sjuco, A.B., Medline Industries, and Caring international division of Medline Industries v. U.S. International Trade Commission and Steridyne Corporation 80–3

Customs Court

Administrative Procedure Act; Interpretative rule, C.D. 4870
American manufacturers protest; classification, C.D. 4870
Appeal to U.S. Court of Customs and Patent Appeals (p. —);
Appeal 80–37—Metal leaf springs; springs and leaves for springs, of base metal; other; suitable for motor vehicle suspension; TSUS
Classification; American manufacturers protest, C.D. 4870
Coated wire; round wire of alloy steel, C.D. 4871
Construction:
Administrative Procedure Act, C.D. 4870
ORR ruling 202–71, C.D. 4870
Tariff Act of 1930, sec. 516, C.D. 4870
Tariff Schedules of the United States:
Item 520.39, C.D. 4869
Item 607.01, C.D. 4871
Item 609.45, C.D. 4871
Item 642.97, C.D. 4871
Item 740.38, C.D. 4869
Item 770.80, C.D. 4870
Item 771.42, C.D. 4870
Item 774.60, C.D. 4870
Schedule 6:
Headnote 1, part 2, C.D. 4871
Part 2, subpart B, headnote 4, C.D. 4871
U.S. Code, title 5:
Sec. 551(4), C.D. 4870
Sec. 553, C.D. 4870
Sec. 553(b), C.D. 4870
Sec. 553(b)(A), C.D. 4870

Covered wire, C.D. 4871
Expanded rubber; sheets of rubber, C.D. 4870
Interpretative rule; Administrative Procedure Act, C.D. 4870
Jewelry, parts of, C.D. 4869
Lexicographic source; *R. Shipley's Dictionary of Gems and Gemmalogy* (Sixth Edition), C.D. 4869
More than doctrine not applied; turquoise, stabilized, C.D. 4869
Other wire covered with nonmetallic material, C.D. 4871
Parts of jewelry, C.D. 4869
Round wire of alloy steel; coated wire, C.D. 4871
Rubber:
    Articles, not specially provided for, C.D. 4870
    Expanded; rubber sheets, C.D. 4870
    Sheets; rubber, expanded, C.D. 4870
Semiprecious stones; stabilized turquoise, C.D. 4869
Sheets of rubber, expanded rubber, C.D. 4870
Stabilized turquoise; semiprecious stones, C.D. 4869
Treatises and related publications:
    K. Davis, *Administrative Law Treatise*, sec. 503 (1958), pp. 300–304
    K. Davis, *Administrative Law Treatise* (2d ed. 1978), sec. 6.30, p. 595, C.D. 4870
    Davis, *Administrative Law of the Seventies*, sec. 601 (1976), C.D. 4870
    R. Webster, *Gems and their Sources, Descriptions and Identification*, p. 218, C.D. 4869
Turquoise, stabilized; more than doctrine not applied, C.D. 4869
Valuation decision:
    Issue:
        Export value—proof—packing costs—The trial in this case was limited to the question of the costs of packing certain cucumbers for shipment to the United States in 1971. Plaintiff had previously been granted a partial summary judgment as to the export value of the cucumbers, exclusive of the packing costs. *Arnold Pickle & Olive Co.* v. *United States*, 79 Cust. Ct. 50, C.D. 4712 (1977). The court found that plaintiff had proven the packing costs by a preponderance of the evidence and the testimony of two of the owners of plaintiff was sufficient to prove the costs of labor, supervision, salt, ice, grading machinery and scales, as well as the free availability of well water. *Held* the cost of packing for each truckload entry to be $43.56210 plus, for those entries in which ice was used, the cost of ice set out in plaintiff's exhibit 17. *Arnold Pickle & Olive Co.*, C.D. 4868
    Merchandise; cucumbers, C.D. 4868
    Value; export, C.D. 4868
    Words and phrases; packing cost, C.D. 4868
Wire:
    Coated, C.D. 4871
    Covered, C.D. 4871
Words and phrases:
    Bovinide, C.D. 4870
    Norazell, C.D. 4870
    Polyflex, C.D. 4870
    Semiprecious stone, C.D. 4869
    Stabilized turquoise, C.D. 4869
    Superlite, C.D. 4870
    Turquoise, C.D. 4869

U.S. GOVERNMENT PRINTING OFFICE : 1980 O - 326-865

SEP 24 1980
326-866 Item 950-D T1.11/3:14/39
378
contin

Customs Bulletin

Regulations, Rulings, Decisions, and Notices concerning Customs and related matters

and Decisions

of the United States Court of Customs and Patent Appeals and the United States Customs Court

92447
N.Y.

Vol. 14 SEPTEMBER 24, 1980 No. 39

This issue contains

T.D. 80–227 through 80–231
General Notice
C.S.D. 80-176 through 80-200
C.R.D. 80–8
Protest abstracts 80 P/122 through 80 P/128
Reap. abstracts 80 R/261 through 80 R/275

International Trade Commission Notice

THE DEPARTMENT OF THE TREASURY
U.S. Customs Service

NOTICE

The abstracts, rulings, and notices which are issued weekly by the U.S. Customs Service are subject to correction for typographical or other printing errors. Users may notify the U.S. Customs Service, Logistics Management Division, Washington, D.C. 20229, of any such errors in order that corrections may be made before the bound volumes are published.

For sale by the Superintendent of Documents, U.S. Government Printing Office, Washington, D.C. 20402. Price: $2.25 (single copy domestic); $2.85 (single copy foreign). Subscription price: $85.00 a year domestic; $106.25 a year foreign.

U.S. Customs Service

Treasury Decisions

(T.D. 80–227)

Drawback Contracts (Rates)

There follows two approved drawback contracts (rates). Anyone who can comply with the conditions of one of these contracts may adhere to it by notifying a Regional Commissioner of Customs in writing of its intentions to do so and providing him with the following information:

1. Name and address of adherent;
2. Factories which will operate under the contract;
3. If a corporation, the names of officers or persons with power of attorney who will sign drawback documents on behalf of adherent.

These contracts are designed to simplify drawback procedures for certain common manufacturing operations. It of course does not preclude or limit the use of individual contracts.

Dated: September 4, 1980.

George C. Steuart
(For Alfred G. Scholle, Director,
Carriers, Drawback and Bonds Division).

(A) Drawback Contract Under 19 U.S.C. 1313(b) for Orange Juice Products

Imported merchandise or drawback products to be designated as the basis for drawback on the exported products	*Duty-paid, duty-free, or domestic merchandise of the same kind and quality as that designated which will be used in the production of the exported products*
Concentrated orange juice for manufacturing (of not less than 55° Brix) as defined in the stand-	Concentrated orange juice for manufacturing (of not less than 55° Brix) as defined in the stand-

ard of identity of the Food and Drug Administration (21 CFR 146.153) and meets the grade A standard of the U.S. Department of Agriculture (7 CFR 2852.2221–2231).	ard of identity of the Food and Drug Administration (21 CFR 146.153) and meets the grade A standard of the U.S. Department of Agriculture (7 CFR 2852.2221–2231).

The imported merchandise which we will designate on our claims will be so similar in quality to the merchandise used in producing the exported articles on which we claim drawback that the merchandise used would, if imported, be subject to the same rate of duty as the imported designated merchandise.

Fluctuations in market value resulting from factors other than quality will not affect the drawback.

EXPORTED ARTICLES ON WHICH DRAWBACK WILL BE CLAIMED

1. Orange juice from concentrate (reconstituted juice).
2. Frozen concentrated orange juice.

GENERAL STATEMENT

We process orange juice products for our own account. We may produce products for the account of another producer or another producer may produce products for our account under contract within the principal and agency relationship outlined in T.D. 55027(2) and 55207(1).

PRODUCTION

1. *Orange juice from concentrate (reconstituted juice).*—Concentrated orange juice for manufacturing is reduced to a desired 11.8° Brix by a blending process to produce orange juice from concentrate. The following optional blending processes may be used:

The concentrate is blended with fresh orange juice (single strength juice); or

The concentrate is blended with essential oils, flavoring components, and water; or

The concentrate is blended with water and is heat treated to reduce the enzymatic activity and the number of viable microorganisms.

2. *Frozen concentrated orange juice.*—Concentrated orange juice for manufacturing is reduced to a desired degree Brix of not less than 41.8° Brix by the following optional blending processes:

The concentrate is blended with fresh orange juice (single strength juice); or

The concentrate is blended with essential oils and flavoring components and water.

MULTIPLE PRODUCTS, WASTE, LOSS OR GAIN

Not applicable.

PROCEDURES AND RECORDS MAINTAINED

We will maintain records to establish:

1. The identity and specifications of the merchandise we designate;
2. The quantity of merchandise of the same kind and quality as the designated merchandise we used to produce the exported articles;
3. That, within 3 years after receiving it at our factory, we used the designated merchandise to produce articles. During the same 3-year period, we produced the exported articles.

We realize that to obtain drawback we must establish that the completed articles were exported within 5 years after the importation of the imported merchandise.

Our records establishing our compliance with these requirements will be available for audit by Customs during business hours. We understand that drawback is not payable without proof of compliance with title 19, United States Code, section 1313(b), and part 22 of the Customs Regulations.

INVENTORY PROCEDURES

Our inventory procedures will show how we will satisfy the legal requirements discussed under the heading "Procedures and Records maintained." We understand that if our records do not show that we satisfy those legal requirements, drawback cannot be paid.

BASIS OF CLAIM FOR DRAWBACK

The basis for claim for drawback will be the quantity of concentrated orange juice for manufacturing used in the production of the exported articles.

It is understood that when fresh orange juice is used as "cutback," it will not be included in the "pounds solids" when computing the drawback due.

AGREEMENTS

The corporation specifically agrees that it will:

1. Comply fully with the terms of this statement when claiming drawback;
2. Open its factory and records for examination at all reasonable hours by authorized Government officers;

3. Keep its drawback related records and supporting data for at least 3 years from the date of liquidation of any drawback claim predicated in whole or in part upon this statement;

4. Keep this statement current by reporting promptly to the Regional Commissioner who liquidates its claims any changes in the number or locations of its offices or factories, the corporate name, or the corporate organization by succession or reincorporation;

5. Keep a copy of this statement on file for ready reference by employees and require all officials and employees concerned to familiarize themselves with the provisions of this statement; and,

6. Issue instructions to insure proper compliance with title 19, United States Code, section 1313(b), part 22 of the Customs Regulations and this statement.

(B) DRAWBACK CONTRACT UNDER 19 U.S.C. 1313(b) ARTICLES MANUFACTURED USING STEEL

Imported merchandise or drawback products to be designated as the basis for drawback on the exported products	*Duty-paid, duty-free or domestic merchandise of the same kind and quality as that designated which will be used in the manufacture of the exported products*
Steel of one general class, e.g. an ingot, falling within one SAE, AISI, or ASTM [1] specification, and if the specification contains one or more grades falling within one grade of the specification.	Steel of the same general class, specification and grade as the steel in the column immediately to the left hereof.

1. The duty-free or domestic steel used instead of the duty-paid steel will be interchangeable for manufacturing purposes with the duty-paid steel. To be interchangeable a steel must be able to be used in place of the substituted steel without any additional processing step in the manufacture of the article on which drawback is to be claimed.

2. Because the duty-paid steel that is to be designated as the basis for drawback is dutiable according to its value, the amomt of duty can vary with its size (gage, width, or length). Inasmuch as the designated duty-paid steel may differ in size from the steel actually used to manufacture the exported articles, the drawback claimant agrees to designate the lowest value steel first, then the next higher

[1] Standards set by the Society of Automotive Engineers (SAE), the American Iron and Steel Institute (AISI), or the American Society for Testing and Materials (ASTM).

value steel, and so on, designating the steel having the highest value last.

3. The drawback claimant agrees that the duty-paid steel will be so similar in quality to the steel used to manufacture the articles on which drawback will be claimed that the steel so used, if imported, would be classifiable in the same tariff item number and at the same rate of duty as the duty-paid imported steel.

4. It is agreed that any fluctuation in market value caused by a factor other than quality does not affect drawback.

5. If the steel is coated or plated with a base metal, in addition to meeting the requirements for uncoated or unplated steel set forth in the parallel columns the drawback applicant agrees that the base-metal coating or plating on the duty-free or domestic steel used in place of the duty-paid steel will have the same composition and thickness as the coating or plating on the duty-paid steel. If the coated or plated duty-paid steel is within a SAE, AISI, ASTM specification, any duty-free or domestic coated or plated steel covered by the same specification and grade (if two or more grades are in the specification) is considered to meet this criterion for same kind and quality.

EXPORTED ARTICLES ON WHICH DRAWBACK WILL BE CLAIMED

The exported articles will have been manufactured in the United States using steels described in the parallel columns above.

GENERAL STATEMENT

We manufacture for our own account. We may produce articles for the account of another or another manufacturer may produce articles for our account under contract within the principal and agency relationship outlined in T.D. 55027(2) and 55207(1).

PRODUCTION

The steels described in the parallel columns will be used to manufacture new and different articles, having distinctive names, characters and uses.

MULTIPLE ARTICLES

Not applicable.

WASTE

The drawback claimant understands that no drawback is payable on any waste which results from the manufacturing operation. Unless the claim for drawback is based on the quantity of steel appearing in the exported articles, the drawback claimant agrees to keep records

to establish the value (or the lack of value), the quantity, and the disposition of any waste that results from manufacturing the exported articles. If no waste results, the drawback claimant agrees to keep records to establish that fact.

LOSS OR GAIN

The drawback applicant agrees to keep records showing the extent of any loss or gain in net weight or measurement of the steel caused by atmospheric conditions, chemical reactions, or other factors.

PROCEDURES AND RECORDS MAINTAINED

We will maintain records to establish:

1. The identity and specifications of the merchandise we designate;
2. The quantity of merchandise of the same kind and quality as the designated merchandise [2] we used to produce the exported articles;
3. That, within 3 years after receiving it at our factory, we used the designated merchandise to produce articles. During the same 3-year period, we produced [3] the exported articles.

We realize that to obtain drawback the claimant must establish that the completed articles were exported within 5 years after the importation of the imported merchandise.

Our records establishing our compliance with these requirements will be available for audit by Customs during business hours. We understand that drawback is not payable without proof of compliance with title 19, United States Code, section 1313(b), and part 22 of the Customs Regulations.

BASIS OF CLAIM

The drawback claimant agrees to claim drawback on the quantity of steel used in producing the exported articles only if there is no waste or valueless or unrecovered waste in the manufacturing operation.

If there is no waste or if the drawback claimant does not want to keep records of any waste involved, the drawback claimant may claim drawback on the quantity of eligible steel that appears in the exported articles.

If there is valuable waste recovered from the manufacturing operation and records are kept which show the quantity and value of the

[2] If claims are to be made on an "appearing in" basis, the remainder of this sentence should read "appearing in the exported articles we produced."

[3] The date of production is the date an article is completed.

waste from each lot of steel, the drawback claimant may claim drawback on the quantity of eligible material used to produce the exported articles less the amount of that steel which the value of the waste would replace.

AGREEMENTS

The corporation specifically agrees that it will:

1. Comply fully with the terms of this statement when claiming drawback;

2. Open its factory and records for examination at all reasonable hours by authorized Government officers;

3. Keep its drawback related records and supporting data for at least 3 years from the date of liquidation of any drawback claim predicated in whole or in part upon this statement;

4. Keep this statement current by reporting promptly to the Regional Commissioner who liquidates its claims, any changes in the number or locations of its offices or factories, the corporate name, or the corporate organization by succession or reincorporation;

5. Keep a copy of this statement on file for ready reference by employees and require all officials and employees concerned to familiarize themselves with the provisions of this statement, and

6. Issue instructions to insure proper compliance with title 19, United States Code, section 1313(b), part 22 of the Customs Regulations and this statement.

(T.D. 80–228)

Manmade Fiber Textile Products—Restriction on Entry

Restriction on entry of manmade fiber textile products manufactured or produced in Singapore

There is published below a directive of August 13, 1980, received by the Commissioner of Customs from the acting chairman, Committee for the Implementation of Textile Agreements, concerning restriction on entry of manmade fiber textile products in category 604 manufactured or produced in Singapore. This directive amends, but does not cancel, that committee's directive of December 14, 1979 (T.D. 80–50).

This directive was published in the Federal Register on August 19, 1980 (45 F.R. 55252), by the committee.

(QUO–2–1)

Dated: September 4, 1980.

WILLIAM D. SLYNE,
(For Richard R. Rosettie, Acting
Director, Duty Assessment Division).

326-866 O - 80 - 2

U.S. DEPARTMENT OF COMMERCE,
INTERNATIONAL TRADE ADMINISTRATION,
Washington, D.C., August 13, 1980.

Committee for the Implementation of Textile Agreements

COMMISSIONER OF CUSTOMS,
Department of the Treasury,
Washington, D.C.

DEAR MR. COMMISSIONER: This directive further amends, but does not cancel, the directive issued to you on December 14, 1979, by the chairman, Committee for the Implementation of Textile Agreements, concerning imports into the United States of certain cotton, wool, and manmade fiber textile products, produced or manufactured in Singapore.

Under the terms of the Arrangement Regarding International Trade in Textiles done at Geneva on December 20, 1973, as extended on December 15, 1977; pursuant to the Bilateral Cotton, Wool and Man Man-Made Fiber Textile Agreement of September 21 and 22, 1978, as amended, between the Governments of the United States and Singapore; and in accordance with the provisions of Executive Order 11651 of March 3, 1972, as amended by Executive Order 11951 of January 6, 1977, you are directed to prohibit, effective on August 18, 1980, and for the 12-month period which began on January 1, 1980 and extends through December 31, 1980, entry into the United States for consumption and withdrawal from warehouse for consumption of manmade fiber textile products in category 604, produced or manufactured in Singapore, in excess of 975,610 pounds.[1]

The action taken with respect to the Government of Singapore and with respect to imports of manmade fiber textile products from Singapore has been determined by the Committee for the Implementation of Textile Agreements to involve foreign affairs functions of the United States. Therefore, these directions to the Commissioner of Customs, which are necessary for the implementation of such actions, fall within the foreign affairs exception to the rulemaking provision of 5 U.S.C. 553. This letter will be published in the Federal Register.

Sincerely,

ARTHUR GAREL,
Acting Chairman, Committee for the Implementation of Textile Agreements.

[1] The level of restraint has not been adjusted to reflect any imports after Dec. 31, 1979.

(T.D. 80-229)

Coastwise Transportation—Customs Regulations Amended

Section 4.93(b)(2), Customs Regulations, amended to add Italy to the list of nations whose registered vessels are permitted to transport certain articles coastwise

TITLE 19—CUSTOMS DUTIES

CHAPTER I—U.S. CUSTOMS SERVICE

PART 4—VESSELS IN FOREIGN AND DOMESTIC TRADES

AGENCY: U.S. Customs Service, Department of the Treasury.

ACTION: Final rule.

SUMMARY: This document amends the Customs Regulations to add Italy to the list of nations which permit vessels of the United States to transport certain articles specified in section 27, Merchant Marine Act of 1920, as amended, between their ports. Satisfactory evidence has been obtained by the Department of State that Italy places no restriction on the transportation of the specified articles by vessels of the United States between ports in Italy. This amendment provides reciprocal privileges for vessels of Italian registry.

EFFECTIVE DATE: February 26, 1980.

FOR FURTHER INFORMATION CONTACT: Charles W. Hart, Carriers, Drawback, and Bonds Division, U.S. Customs Service, 1301 Constitution Avenue NW., Washington, D.C. 20229; 202-566-5706.

SUPPLEMENTARY INFORMATION:

BACKGROUND

Section 27, Merchant Marine Act of 1920, as amended (46 U.S.C. 883) (the act), provides generally that no merchandise shall be transported by water, or by land and water, between points in the United States except in vessels built in and documented under the laws of the United States and owned by U.S. citizens. However, the act, as amended by Public Law 90-474 (82 Stat. 700; T.D. 68-227), provides that if the Secretary of State advises the Secretary of the Treasury that a foreign nation does not restrict the transportation of certain articles between its ports by vessels of the United States, reciprocal privileges will be accorded to vessels of that nation, and the prohibition against the transportation of those articles between points in the United States will not apply to its vessels.

Section 4.93(b)(1), Customs Regulations (19 CFR 4.93(b)(1)), lists those nations found to extend reciprocal privileges to vessels of the

United States for the transportation of empty cargo vans, empty lift vans, and empty shipping tanks. Those nations found to grant reciprocal privileges to vessels of the United States for the transportation of equipment for use with cargo vans, lift vans, or shipping tanks; empty barges specifically designed for carriage aboard a vessel and certain equipment for use with such barges; certain empty instruments of international traffic; and certain stevedoring equipment and material are listed in section 4.93(b)(2), Customs Regulations (19 CFR 4.93(b)(2)).

Italy is included in the list in section 4.93(b)(1), Customs Regulations (19 CFR 4.93(b)(1)), of those nations found to extend reciprocal privileges to vessels of the United States for the transportation of empty cargo vans, empty lift vans, and empty shipping tanks.

On February 26, 1980, the Department of State advises the Secretary of the Treasury that Italy now places no restriction on the transportation of the other articles listed in the act by vessels of the United States between ports in Italy. Therefore, reciprocal privileges are accorded to vessels of Italian registry as of that date.

FINDING

On the basis of the information received from the Secretary of State, as described above, I find that the Government of Italy places no restriction on the transportation of the other articles specified in section 27 of the Merchant Marine Act of 1920, as amended, by vessels of the United States between points in Italy. Therefore, reciprocal privileges are accorded to vessels of Italian registry as of February 26, 1980.

AMENDMENT TO THE REGULATIONS

To reflect the reciprocal privileges granted to Italy, section 4.93(b)(2), Customs Regulations (19 CFR 4.93(b)(2)), is amended by inserting "Italy" between "Israel" and "Liberia" in the list of nations under this section.

(Sec. 27, 41 Stat. 999, as amended, sec. 14, 67 Stat. 516, Public Law 90-474, 82 Stat. 700 (5 U.S.C. 301, 19 U.S.C. 1322(a), 46 U.S.C. 883).)

INAPPLICABILITY OF PUBLIC NOTICE AND DELAYED EFFECTIVE DATE REQUIREMENTS

Because this is a minor amendment in which the public is not particularly interested and there is a statutory basis for the described extension of reciprocal privileges, notice and public procedure pursuant to 5 U.S.C. 553(b)(B) are unnecessary. In accordance with 5 U.S.C. 553(d)(1), a delayed effective date is not required because this amendment grants an exemption.

REGULATIONS DETERMINED TO BE NONSIGNIFICANT

In a directive published in the Federal Register on November 8, 1978 (43 F.R. 52120), implementing Executive Order 12044, Improving Government Regulations, the Treasury Department stated that it considers each regulation or amendment to an existing regulation published in the Federal Register and codified in the Code of Federal Regulations to be significant. However, regulations which are nonsubstantive, are essentially procedural, do not materially change existing or establish new policy, and do not impose substantial additional requirements or costs on, or substantially alter the legal rights or obligations of, those affected, with secretarial approval may be determined not to be significant. Accordingly, it has been determined that this document does not meet the Treasury Department criteria in the directive for significant regulations.

DRAFTING INFORMATION

The principal author of this document was Betty A. Stemley, Regulations and Research Division, Office of Regulations and Rulings, U.S. Customs Service. However, personnel from other offices of the Customs Service and the Departments of State and the Treasury participated in its development.

Dated: August 29, 1980.

JOHN P. SIMPSON
(For Assistant Secretary of the Treasury).

[Published in the Federal Register, Sept. 15, 1980 (45 F.R. 60900)]

(T.D. 80-230)

Bonds

Approval and discontinuance of carriers bonds, Customs form 3587

Bonds of carriers for the transportation of bonded merchandise have been approved or discontinued as shown below. The symbol "D" indicates that the bond previously outstanding has been discontinued on the month, day, and year represented by the figures which follow. "PB" refers to a previous bond, dated as represented by figures in parentheses immediately following, which has been discontinued. If the previous bond was in the name of a different company or if the surety was different, the information is shown in a footnote at the end of the list.

Dated: September 8, 1980.

Name of principal and surety	Date of bond	Date of approval	Filed with district director/area director/amount
American Auto Shippers, Inc., 450 Seventh Ave., NY, NY; motor carrier; Old Republic Insurance Co.	June 23, 1980	June 23, 1980	New York Seaport, NY $50,000
Bicentennial Transport, Inc., 317 N. Point Blvd., Baltimore, MD; motor carrier; Fidelity and Deposit Co. of MD. (PB 1/21/80) D 6/12/80 [1]	June 12, 1980	June 18, 1980	Baltimore, MD $25,000
Burgmeyer Brothers, Inc., P.O. Box 192, Reading, PA; motor carrier; Fidelity & Deposit Co. D 7/27/80	Nov. 18, 1977	Nov. 25, 1977	Philadelphia, PA $50,000
Roger A. Chilton DBA Chilton Trucking Co., Route 5, Box 934, Beaumont, TX; motor carrier St. Paul Fire and Marine Ins. Co.	July 18, 1980	July 28, 1980	Port Arthur, TX $25,000
Coastal Transport & Trading Co., Inc., a w/o/s of Refrigerated Transport Co., Inc., 3901 Jonesboro Rd., SE Forest Park, GA; motor carrier; The Aetna Casualty and Surety Co. of Ill. (PB 8/25/72) D 8/13/80 [2]	Aug. 13, 1980	Aug. 14, 1980	Savannah, GA $25,000
Denver Southwest Express P.O. Box 9799, Little Rock, Arkansas; motor carrier; St. Paul Fire and Marine Ins. Co.	June 2, 1980	July 11, 1980	New Orleans, LA $25,000
Momsen Trucking Co., 13811 "L" St., Omaha, NB; motor carrier; St. Paul Fire & Marine Ins. Co.	July 16, 1980	July 24, 1980	Chicago, IL. $25,000
National Carriers, Inc., P.O. Box 1358, 1501 E. Eighth, Liberal, KS; motor carrier; American Casulaty Co. of Reading, PA.	June 4, 1980	June 19, 1980	St. Louis, MO $50,000
Palmer Motor Express, Inc., P.O.B. 103, Savannah, GA; motor carrier; Commercial Union Ins. Co. (PB 5/1/75) D 4/11/80 [3]	Apr. 11, 1980	Apr. 11, 1980	Savannah, GA $25,000
River Transport Inc., P.O. Box 633, Charlottetown, P.E.I., Canada, motor carrier; Peerless Ins. Co. D 6/30/80	Feb. 10, 1976	Feb. 25, 1976	Portland, ME $25,000
J.H. Rose Truck Line, Inc., P.O.B. 16190, Houston, TX; motor carrier; Lawyers Surety Corp.	May 10, 1980	June 30, 1980	Houston, TX $25,000
Schultz Transit, Inc., 323 Bridge St., Winona, MN; motor carrier; The Aetna Casualty & Surety Co. (PB 2/12/76) D 5/29/80	Apr. 1, 1980	May 29, 1980	Laredo, TX $25,000
Shaffer Trucking, Inc., P.O. Box 418, U.S. Rt. 1, New Kingstown, PA; motor carrier; St. Paul Fire & Marine Ins. Co.	Aug. 17, 1980	June 27, 1980	Philadephia, PA $50,000
Transport Motor Express, Inc., 2329 Meyer Rd., P.O.B. 958, Fort Wayne, Indiana; motor carrier; Insurance Co. of North America D 6/20/80	Oct. 31, 1968	Dec. 17, 1968	Cleveland, OH $30,000

Name of principal and surety	Date of bond	Date of approval	Filed with district director/area director/amount
United States Trucking Corp., (A NY Corp) New County Rd., Secaucus, NJ; motor carrier; Federal Ins. Co. (A NJ Corp) (PB 6/4/64) D 6/9/80 [4]	June 9, 1980	June 9, 1980	New York Seaport, NY $100,000
United Trnasports, Inc., 4900 Santa Fe St., Oklahoma City, OK; motor carrier; Hartford Accident & Indemnity Co. (PB 4/30/68) D 6/23/80 [5]	Apr. 30, 1980	June 23, 1980	Houston, TX $25,000
Western Cargo Carriers, Inc., 17405 Valley View, Cerritos, CA; motor carrier; Peerless Ins. Co.	May 14, 1980	June 16, 1980	Los Angeles, CA $50,000
Wooster Express Inc., South Windsor, CT; motor carrier; Fireman's Ins. Co. of Newark D 7/18/80	July 1, 1977	July 5, 1977	Bridgeport, CT $50,000

[1] Principal is Bicentennial Trucking, Inc.
[2] Principal is Refrigerated Transport Co., Inc.
[3] Surety is the Travelers Indemnity Co.
[4] Surety is the Travelers Indemnity Co.
[5] Surety is Seaboard Surety Co.

BON-3-03

GEORGE C. STEUART
(For Alfred G. Scholle, Director,
Carriers, Drawback and Bonds Division).

(T.D. 80-231)

Foreign Currencies—Daily Rates for Countries Not on Quarterly List

Rates of exchange based on rates certified to the Secretary of the Treasury by the Federal Reserve Bank of New York for the Brazil cruzeiro, People's Republic of China yuan, Hong Kong dollar, Iran rial, Philippines peso, Singapore dollar, Thailand baht (tical), and Venezuela bolivar

The Federal Reserve Bank of New York, pursuant to section 522(c), Tariff Act of 1930, as amended (31 U.S.C. 372(c)), has certified buying rates for the dates and foreign currencies shown below. The rates of exchange, based on these buying rates, are published for the information and use of Customs officers and others concerned pursuant to part 159, subpart C, Customs Regulations (19 CFR 159, subpart C).

Brazil cruzeiro:	
August 25–26, 1980	$0. 1082
August 27–29, 1980	. 0179
People's Republic of China yuan:	
August 25–28, 1980	$0. 675356
August 29, 1980	. 678748

Hong Kong dollar:	
August 25, 1980	$0. 202061
August 26, 1980	. 201959
August 27, 1980	. 202184
August 28, 1980	. 201979
August 29, 1980	. 202081
Iran riral:	
August 25–29, 1980	Not available
Philippines peso:	
August 25–29, 1980	$0. 1320
Singapore dollar:	
August 25, 1980	$0. 468823
August 26, 1980	. 469373
August 27, 1980	. 470256
August 28, 1980	. 472144
August 29, 1980	. 470478
Thailand baht (tical):	
August 25–29, 1980	$0. 0488
Venezuela bolivar:	
August 25–29, 1980	$0. 2329

(LIQ-3-TRODE)

Dated: September 10, 1980.

G. Scott Shreve
(For Richard Rosettie, Acting
Director, Duty Assessment Division).

ERRATUM

In Customs Bulletin, volume 14, dated August 17, 1980, Front cover, should read No. 35 instead of No. 3b.

U.S. Customs Service

General Notice

(521743)

Extension of Time for Comments in Response to Proposed Change of Practice Concerning Garments With Traditional, but Primarily Decorative Features, and Garments With Simulated Features

AGENCY: U.S. Customs Service, Department of the Treasury.

ACTION: Notice of extension of time for comments.

SUMMARY: This document extends the period of time permitted for the submission of comments in response to a notice published in the Federal Register on August 14, 1980 (45 F.R. 54085), inviting the public to comment as to whether a decision of the U.S. Customs Court, *The Ferriswheel* v. *United States*, C.D. 4844 (Feb. 21, 1980), requires the Customs Service to change its current uniform and established practice of classifying garments with traditional, but primarily decorative features, as well as garments with simulated features, as nonornamented wearing apparel. Comments were to have been received on or before September 15, 1980. However, Customs has received several requests to extend the period of time to allow for the preparation and submission of more detailed comments by interested members of the public.

DATES: Comments must be received on or before October 15, 1980.

ADDRESS: Written comments, preferably in triplicate, should be addressed to the Commissioner of Customs, attention: Regulations and Research Division, room 2426, U.S. Customs Service, 1301 Constitution Avenue NW., Washington, D.C. 20229.

FOR FURTHER INFORMATION CONTACT: Harold Loring, Regulations and Research Division, U.S. Customs Service, 1301 Constitution Avenue NW., Washington, D.C. 20229; 202-566-8238.

Dated: September 9, 1980

SALVATORE E. CARAMAGNO
(For the Director, Office of
Regulations and Rulings).

[Published in the Federal Register, Sept. 15, 1980 (45 F.R. 60921)]

326-866 O - 80 - 3

U.S. Customs Service

Customs Service Decisions

The following are decisions made by the U.S. Customs Service where the issues involved are of sufficient interest or importance to warrant publication in the CUSTOMS BULLETIN.

Dated: September 2, 1980.

DONALD W. LEWIS,
Director,
Office of Regulations and Rulings.

(C.S.D. 80-176)

Classification: Fruit Products; Preserves or Jam

Date: December 31, 1979
File: CLA-2:RRUCGC
060450 LCS

This ruling concerns the Customs classification of fruit products labeled "(name) Preserves" packed by (name of foreign company), and imported by (name of importer).

Facts.—Fruit products (i.e., strawberry, apricot, peach, and plum), manufactured in Israel and stated to meet the "Standard of Identity" applicable to "Preserves or Jams," promulgated by the Food and Drug Administration, U.S. Department of Health, Education, and Welfare (21 CFR 29.3), are imported through the ports of New York, Baltimore, Boston, Los Angeles, and San Francisco.

The inquirer states this merchandise had been classified previously under the provisions for all jellies, jams, marmalades, and fruit butters, according to the particular fruit or fruits used, in schedule 1, part 9, subpart C, Tariff Schedules of the United States (TSUS), and specifically in items 153.02 through 153.32 thereof. The importer states that recently the national import specialist advised "* * * that henceforth the products will be classified generally under schedule 1, part 9, subpart B * * *" and specifically under those TSUS items of subpart B covering berries or fruits "prepared or preserved" in item 146.14 through 150.00, TSUS.

Issue.—Is merchandise represented by the sample submitted by

the inquirer classifiable under the provisions for all jellies, jams, marmalades, and fruit butters, in items 153.02 through 153.32, TSUS (some of which as products of Israel are entitled to duty-free treatment pursuant to the Generalized System of Preferences (GSP)), or as prepared or preserved fruit in items 146.14 through 150.00, TSUS, both according to the specific fruit or fruits from which produced?

Law and analysis.—In *Julius Goldfarb* v. *United States*, 55 Cust. Ct. 120, C.D. 2560 (1965), the Customs Court, citing *United States* v. *Mercantil Distribuidora et al.* 43 CCPA 111, C.A.D. 617 (1956), held that, absent any showing of "* * * a commercial designation different from the common or dictionary meaning of jam * * * the common meaning prevails."

The Court in *Goldfarb* stated:

> In Webster's New International Dictionary, second edition, 1956, jam is defined as "A product made by boiling fruit and sugar to a thick consistency without preserving the shape of the fruit, as raspberry jam." Indeed, the semantics of derivation of the word suggest that a fruit jam is a fruit preserve in which the fruit is jammed, that is, crowded, caught fast and crushed or bruised.

Moreover, the court cited with approval the definitions set forth in the "* * * well-known book for cooks, called the New Fannie Farmer Boston Cooking School Cookbook, ninth edition * * *" as follows:

> Jam or Marmalade. Fruit cut into small pieces cooked with syrup until jellylike; and
>
> Preserves. Fruit canned in a sugar syrup, thinner than jam. The fruit is usually left whole or in fairly large pieces (at p. 127).

The inquirer apparently seeks a blanket ruling, based on the four sample jars (i.e., apricot, peach, plum, and strawberry preserve) submitted with the inquiry, that all (name) preserves are fruit jams within the scope of that term as defined by the court in *Goldfarb* and included under items 153.02 through 153.32, TSUS. Organoleptic examination of three of the samples submitted reveals (one, the peach, was broken in shipment and was discarded) thick, highly viscous substances of relatively uniform consistency throughout each mass. No recognizable pieces of fruit, apart from a few pieces of plum skin in the "Plum Preserve," were observed. Accordingly, the samples submitted meet the test in *Goldfarb* and constitute "jam" for tariff purposes. This position is consistently followed by the Customs Service (e.g., CLA-2:R:CV:MC, 034766, September 16, 1974; CLA-2:R:CV:MC, 051617 WJA, May 19, 1977; MCS 463.52S, 010768, September 15, 1971.

However, this does not mean nor does it constitute a ruling to the effect that all products bearing the (name) label and identified as "(name) Preserve" constitute "jam" for tariff classification purposes.

Information received from the national import specialist in New York indicates that repeated problems have been encountered with regard to this particular type of merchandise and that numerous conferences have been held with importers, manufacturers' representatives, and foreign service officers of the countries of origin, both to clarify Customs' position and to suggest methods of producing a product which would conform to the above-stated requirements. Although some manufacturers produced acceptable "jam" for a period of time thereafter, as a result of either inability or unwillingness, certain manufacturers failed to continue to produce jams within the scope of these requirements. Accordingly, our New York office has required importers or their brokers to make entry of these continuously nonconforming products under the appropriate provision for prepared or preserved fruit in subpart B, schedule 1, part 9, TSUS, subject to verification by actual examination of representative wharf samples or samples received.

The term "preserve" or "preserved" if used on the labels of such merchandise, is not, has not been, and will not be determinative in and of themselves of the tariff classification thereof.

Under these circumstances, the action taken by our New York field office is justified and is consistent with our goals of proper classification, commercial certainty, and protection of the revenue.

Holding.—Merchandise represented by the above-described samples is classifiable under the provision for jam according to the particular fruit or fruits used in the manufacture thereof in items 153.02 through 153.32, TSUS. Merchandise which contains whole or recognizable pieces of the fruit or fruits from which manufactured is properly classifiable under the appropriate item number in schedule 1, part 9, subpart B, TSUS, based on the type of fruit or fruits as prepared or preserved edible fruits. However, until such time as the national import specialist in New York is satisfied that particular manufacturers are producing products consistently within the scope of the term "jam" for tariff purposes, entries are to be filed in accordance with his specific instructions.

(C.S.D. 80–177)

Instruments of International Traffic: Fiberboard Containers

Date: December 31, 1979
File: BOR-7-07-RRUCDC
104402 MKT

This ruling concerns whether certain fiberboard containers are instruments of international traffic pursuant to title 19, United States Code, section 1322(a), and section 10.41a, Customs Regulations (19 CFR 10.41a).

Issue.—Whether fiberboard containers used to carry cargo are instruments of international traffic.

Facts.—A corporation plans to employ fiberboard containers, approximately 81 inches long, 59 inches wide, and 62 inches high, to carry cargo. Initially, about 2,000 containers, each with a life span of three round trips, will be in use passing through the ports of New York, Los Angeles, San Francisco, Honolulu, and Anchorage. The containers will be printed with the corporate logo, which is a type of bird (a crane), and with the serial code CPNJL.

Law and analysis.—Title 19, United States Code, section 1322(a), provides that vehicles and other instruments of international traffic, of any class specified by the Secretary of the Treasury, shall be granted the customary exceptions from the Customs laws to such extent and subject to such terms and conditions as may be prescribed in regulations or instructions of the Secretary of the Treasury. To qualify as an "instrument of international traffic" within the meaning of section 1322(a), an article must be a container or holder, substantial, suitable for and capable of repeated use, and used in significant numbers in international traffic (sec. 10.41a fn. 38a, Customs Regulations; 19 CFR 10.41a fn. 38a).

T.D. 56243 and T.D. 74–296 designate wooden boxes similar to the fiberboard containers in this case as instruments of international traffic. Because the fiberboard containers fall within the class of containers described in T.D. 56243 and T.D. 74–296 and they are substantial, suitable for, and capable of repeated use, and used in significant numbers in international traffic, we consider them to qualify as instruments of international traffic within the meaning of section 1322(a). These containers may be released in accordance with section 10.41a, Customs Regulations.

Holding.—Fiberboard containers, approximately 81 inches long, 59 inches wide, and 62 inches high, used to carry cargo, qualify as instruments of international traffic within the meaning of title 19, United States Code, section 1322(a). These containers may be released in accordance with section 10.41a, Customs Regulations.

Effect on other decisions.—T.D. 56243 and T.D. 74–296 are followed.

(C.S.D. 80–178)

Prohibited and Restricted Importations: Trademark Infringement Involving Marks Similarly Spelled and Pronounced

Date: January 2, 1980
File: TMK-3-RRUEE
711879 SO

This ruling concerns the applicability of the prohibition set forth in section 42 of the act of July 5, 1946 (commonly referred to as the

Lanham Act, 60 Stat. 440; 15 U.S.C. 1124), against the importation into the United States of goods bearing infringing marks and names.

Issue.—Would the importation of ceramic figurines bearing the mark "Yadro" infringe upon the rights of the owner of the registered trademark "Lladro," for porcelain and ceramic vases, statuettes, and figurines.

Facts.—Ceramic figurines bearing the mark "Yadro" have been imported from Korea. Our Laredo, Tex., district office considered these figurines to be an infringement upon the registered trademark "Lladro" (pronounced Yadro). The trademark owner, Lladro, S. A., a Spanish corporation, has recorded their trademark for porcelain and ceramic vases, statuettes, and figurines with Customs for import protection. A notice of redelivery for the shipment of imported ceramic figurines was issued by our Laredo office. A sample imported figurine was submitted for our consideration.

Law and analysis.—Section 42 of the act of July 5, 1946 (commonly referred to as the Lanham Act, 60 Stat. 440, 15 U.S.C. 1124), prohibits the importation into the United States of merchandise which shall copy or simulate a registered trademark of any foreign manufacturer or trader who is entitled under the provisions of a treaty, convention, declaration, or agreement between the United States and any foreign country to advantages afforded by law to citizens of the United States in respect to trademarks, provided, a copy of such trademark registration is filed with the Secretary of the Treasury and recorded in the manner provided by regulations (19 CFR 133.1–133.7).

Infringement of federally registered marks is governed by the test of whether defendant's use is likely to cause confusion, or to cause mistake, or to deceive. In considering the question of whether or not the marks are confusingly similar, we note that the marks are not identical. However, the only difference is that the imported figurines bear a mark that begins with the letter "Y" followed by "adro" while the registered trademark begins with "Ll" followed by "adro." As noted above, the Spanish pronuciation of "Ll" is the same as the English "Y" sound, so that in English, both marks sound alike. In view of the striking similarity of appearance and pronunciation, we are of the opinion that, under the normal test applicable to unsophisticated buyers of a product at retail, there would be a substantial likelihood of confusion.

The more distinctive the trademark is, the greater its influence in stimulating sales, its hold on the memory of purchasers, and the likelihood of associating similar designations on other goods with the same source. A purely fanciful, coined mark such as "Kodak" is labeled as strong, while words in common use on a variety of products which are descriptive or suggestive, such as "Gold Seal," "Royal,"

"Blue Ribbon," "Premium," "Champion," "Ideal," "Star," etc., are considered to be weak marks. We would consider "Lladro" to be a strong mark, entitled to protection over a wide range of related products and variations on appearance of the mark.

The "Lladro" trademark has been in continuous use in commerce since October 30, 1963. Consequently, the Lladro, S.A., trademark has become distinctive and strongly associated with the Lladro, S.A., business and its reputation for quality products. It appears to us that the manufacturers and importers of the ceramic figurines bearing the alleged infringing mark are latecomers in the industry. In a situation such as this, any doubts regarding the likelihood of confusion should be resolved in favor of the prior user of the mark. The theory behind this is that the newcomer's field of selection of a mark is not so limited as to require the adoption of a mark likely to cause confusion.

Holding.—Entry of the imported ceramic figurines bearing the mark, "Yadro," would be prohibited entry into the United States as infringing on the registered trademark, "Lladro." Importations of ceramic figurines bearing the infringing mark should be detained pursuant to section 133.22 of the Customs Regulations (19 CFR 133.22). Articles detained pursuant to 19 CFR 133.22, may be released to the importer if any of the circumstances allowing exemption from trademark restrictions set forth in 19 CFR 133.21(c) are established. You may furnish a copy of this ruling to all concerned parties.

(C.S.D. 80–179)

Country-of-Origin Marking: Use of Abbreviation and Name of City

Date: January 2, 1980
File: MAR-1-01-RRUEE
711381 HS

This ruling concerns whether the name of the country of origin of crystals manufactured in the Philippines can be abbreviated on the crystals.

Issue.—Whether crystals manufactured in the Philippines can be marked with an abbreviation of the name of the country of origin or with the name of the city in which they are manufactured.

Facts.—Crystals are manufactured by the company in Manila, Philippines. Increased labor rates in the United States, where the stamping of the name of the country of origin on the crystals occurs, have prompted the company to request approval to abbreviate Philippines to Philip or Manila or some form of abbreviation with a maximum of six characters. Any marking with more than six charac-

ters requires the company to double its stamping cycle at an annual cost of $3,500 and reduces machine capacity.

Law and analysis.—Section 304 of the Tariff Act of 1930, as amended (19 U.S.C. 1304), provides in general that all articles of foreign origin imported into the United States must be legibly and conspicuously marked to indicate the English name of the country of origin to an ultimate purchaser in the United States. The Secretary of the Treasury has the authority to determine whether certain words, phrases, or abbreviations will be acceptable as the English name. The intent is to insure that the marking will give the ultimate purchaser definite and reliable information as to the exact country of origin without the need for speculation or interpretation. The regulations adopt a strict standard and require that the English name of the country of origin must be used unless another marking to indicate the English name is specifically authorized by the Commissioner of Customs.

As the Commissioner of Customs has not authorized the use of any abbreviations to indicate the Philippines as the country of origin of a product, the crystals may not be marked "Philip" or any other form of abbreviation.

"Manila," also, is not an acceptable marking. In *International Publishers, Inc.* v. *United States*, T.D. 48723 (1936), it was held that the marking required by section 304 shall include the name of the country of origin, and the name of a subdivision such as a city within the country of origin is not alone sufficient.

Holding.—Crystals manufactured in the Philippines marked "Manila" or with an abbreviation of Philippines would not comply with the marking requirements of 19 U.S.C. 1304.

(C.S.D. 80–180)

Drawback: Landing Certificate as Proof of Exportation; Section 22.17 (a) and (b), Customs Regulations

Date: January 8, 1980
File: DRA-1-RRUCDB NK
211068

Issue.—Whether the signature of a revenue officer of a foreign country required on a landing certificate for drawback purposes may be waived.

Facts.—A manufacturer exports aircraft for drawback. A landing certificate is necessary to prove exportation. The manufacturer requests that Customs accept a foreign landing certificate which contains a stamped official seal of the foreign customs administration

and waive the requirement that the certificate be signed by a revenue officer of the foreign country.

Law and analysis.—Section 22.17(a) of the Customs Regulations provides, in part, that a landing certificate shall be required for every aircraft which departs from the United States under its own power if drawback is claimed on the aircraft or any part thereof. Landing certificates for aircraft shall show the exact time of landing of the aircraft in the foreign country and describe the aircraft or parts thereof, on which drawback is claimed in sufficient detail to enable Customs officers to identify them with the bill of lading, air waybill, cargo manifest, or notice of exportation.

Section 22.17(b) further states that whenever a landing certificate is required, it shall be signed by a revenue officer of the foreign country to which the merchandise is exported, unless it is shown that such country has no customs administration, in which case the certificate may be signed by the consignee or the vessel's agent at the place of lading.

The word "shall" in sections (a) and (b) denotes a mandatory requirement that a landing certificate is required when aircraft departs from the United States under its own power when drawback is claimed, and the certificate must be signed by a revenue officer of the foreign country. Since the foreign country involved has a customs administration, a landing certificate which is not signed by a revenue officer of that foreign country is not complete and does not conform to the requirements of sections (a) and (b). The regulations do not require the stamped seal of the foreign customs administration on landing certificates and such a seal does not constitute the signature of a revenue officer of the foreign country.

Holding.—The requirement that a landing certificate shall be signed by a revenue officer of the foreign country to which the merchandise is exported for drawback is mandatory and cannot be waived.

Alternative.—The facts submitted do not indicate whether the manufacturer was unable to obtain the signature of the revenue officer of the foreign country to complete the landing certificate. Section 22.17(e) of the Customs Regulations provides that when a landing certificate is required and cannot be produced, an application for its waiver may be made to the Regional Commissioner accompanied by evidence of exportation and landing abroad as may be available. If the Regional Commissioner is satisfied by the evidence submitted that the merchandise (aircraft) has been exported he may grant the waiver. If not, the Regional Commissioner shall transmit the application to Headquarters for a final determination.

(C.S.D. 80-181)

Special Appraisement: Allocation of Costs for Wearing Apparel Imported Under Item 807.00, TSUS

Date: January 8, 1980
File: CLA-2-R:CV:V RP
061430

This is in reference to the subject internal advice request submitted in connection with the importation of wearing apparel under item 807.00, Tariff Schedules of the United States (TSUS).

Issue.—Whether certain costs for wearing apparel imported under item 807.00, TSUS, are allocable to the U.S. components or whether such costs form part of the dutiable value of the assembled items as assists.

Facts.—(Name of importer) imports wearing apparel assembled in Mexico under item 807.00, TSUS. The articles being produced are uniforms, and the question presented concerns the calculation of constructed value for such articles under item 807.00, TSUS. (Importer) performs the following product and component design functions which are necessary to later incorporate components into the finished assembled article.

1. (Importer) employs designers who spend the greatest portion of their time engaged in research, including visiting local and out-of-town fabric and trim suppliers, going to fashion shows, and evaluating market requirements.

A written description or design sketch of a uniform is prepared utilizing an existing pattern or design. Since the products are uniforms, the esthetic efforts of the designers are expended on specific components such as collars, cuffs, fronts, pockets, sleeves, etc., and the design efforts are attributable thereto.

2. Patternmakers interpret the sketch or written description of the designer and make the first hardboard patterns of the components.

3. Patterns are then submitted to employees who produce sample garments. These employees produce (importer) salesmens' sample lines, which are ultimately shown to their customers.

4. A computer is utilized in the grading of the component patterns. Grading increases or decreases the dimensions of a component in order to increase or decrease the size of the ultimate garment.

The operations involved in grading the component pattern are as follows: Initially, the component pattern is digitized by converting the graphic two-dimensional shape to a numerical value on an x-y axis. Grade rules are then established which conform to a particular desired fit by (importer). This data is stored in the computer. Next, instructions are entered into the computer which indicate what grade

rule is to be used to obtain a desired size. The result is plotted or drawn automatically by the computer in what is called a nest. The nest indicates the dimensions of each size for a particular component. The graded components are then laid out in a given area, as dictated by the fabric width, providing maximum fabric utilization. This results in a marker, which is placed on top of spread fabric for cutting purposes.

5. The product development section cuts and sews the first factory samples, and insures construction compatibility in manufacturing. This section also makes all working samples, written specification sheets, and salesmen samples.

It is the opinion of your office that the costs incurred by the importer in connection with the design process outlined above are fully dutiable, except where the importer has clearly demonstrated that an expense is allocable to the components and qualifies for exemption under item 807.00, TSUS. In most stages of the design process, you are of the opinion that some portion of the expenses are allocable to the components.

The Chief, Duty Assessment Branch VII/VIII, New York Seaport, submitted his comments in a memorandum (file CLA-2-03, S:C: DVIII-79-576). New York takes the position that only the cosst related to the computer grading operation (step 4) are directly allocable to the American-made components and should not be included in the cost of fabrication of the assembled article.

Counsel for the importer believes that the costs incurred in step 3 and step 5 form part of the dutiable value of the subject merchandise. However, counsel contends that the costs involved in the remaining steps in the design process are directly allocable to the components.

Law and analysis.—Articles imported under item 807.00, TSUS, are appraised on their full value, less the costs or value of the American-made components contained therein. Headnote 3(a), subpart B, part 1, schedule 8, TSUS, provides in part that if no charge is made for U.S. components assembled into an imported article, then the cost of these components will be "the value of such components at the time of shipment for exportation." If the appraising officer determines that the value of these components set out in the invoice and entry papers is not reasonable then the value of such products shall be determined in accordance with section 402 or 402a of the Tariff Act of 1930, as amended. Section 10.19(a)(1), Customs Regulations, provides that in the absence of market value information, the value of American-made components

> shall be the sum of all costs incurred in producing the items, including general expenses, an amount for profit, and all costs

incurred from the time the items are completed to the time they arrive at the port of exportation.

Section 10.19(b)(3), Customs Regulations, provides that the cost of fabrication of an assembled article includes:

> Costs of research, development, design, engineering, and blueprints, except where they are directly allocable to American-made components. Where they are directly allocable to American-made components they are to be included in the value of those components, and are not to be included in the cost of fabrication.

In the case before us, we are of the opinion that the costs associated with steps 3 and 5 in the design process form part of the dutiable value of the imported merchandise. These costs are incurred in connection with the development of design samples or factory samples, and are related to the garment in its finished condition; therefore, they are dutiable as assessed.

It is our opinion that the costs associated with steps 1, 2, and 4 in the design process are directly allocable to the American-made components. The design effort described in step 1 are expended on the specific components, with the exception of the designer's general research work (i.e., attending fashion shows, visiting fabric suppliers, etc.), which is preconceptual in nature and does not form part of dutiable value. With respect to the pattern makers described in step 2, we note that Headquarters has ruled that costs for preparing or manufacturing such patterns are directly allocable to the American-made components. (file R:CV:V NM 400033, dated Feb. 14, 1977). Moreover, we believe that the entire computer grading process described in step 4 is related to the grading of the components. While it is true that computer grading is a step toward the development of the finished garment, the evidence demonstrates that the computer is utilized solely for the grading of the components, in order to prepare the component design for cutting purposes.

Holding.—It is our opinion that the costs associated with steps 3 and 5 in the design process form part of the dutiable value of the assembled merchandise. With respect to the expenditures associated with steps 1, 2, and 4 (to the extent that the value or cost of the American-made components encompass these expenditures), we conclude that these costs are directly allocable to American-made components, and are not to be included in the cost of fabrication of the assembled merchandise.

(C.S.D. 80-182)

Country-of-Origin Marking: Exception From Individual Marking for Articles With Properly Marked Containers

Date: January 9, 1980
File: MAR-2-03-RRUEE
711568 HS

This ruling concerns country-of-origin marking on gold-plated articles.

Issue.—Whether articles composed primarily of a base metal having a surface layer of electroplated gold that are marked "Canada Gold Co." comply with country-of-origin marking requirements.

Facts.—A company plans to import from Canada certain articles such as cigarette cases, pendant watches, pendants, cigarette lighters, paperweights, rings, belt buckles, bracelets, and stickpins composed primarily of a base metal having a surface layer of electroplated gold. Each article comprises a replica of a bullion bar with one face having a serial number, a trademark and the company's name, "Canada Gold Co." No other marking will appear on the articles. Each article will be shipped in a cloth bag to which a cardboard tag will be attached. The cloth bags and cardboard tags will be marked "Made in Canada."

Law and analysis.—Section 304 of the Tariff Act of 1930, as amended (19 U.S.C. 1304), provides in general that all articles of foreign origin must be legibly and conspicuously marked to indicate the English name of the country of origin to an ultimate purchaser in the United States.

Customs has ruled that the name of a place appearing in connection with the name of a firm so that it might appear that the place named is only the address of the firm without any indication that such firm is the manufacturer does not sufficiently indicate that the article so marked is produced in the place so named. Accordingly, merely marking articles "Canada Gold Co." would not comply with general marking requirements.

However, there are exceptions to the marking requirements set forth in 19 U.S.C. 1304(a)(3). Among these exceptions is paragraph (a)(3)(D) which excepts articles from marking if their containers will reasonably indicate the origin of the article. For an item to fall under this exception the item must reach the ultimate purchaser in a properly marked container and the container must reach the ultimate purchaser unopened.

It is our opinion that if the articles in question are sold to ultimate purchasers (in this case, retail purchasers) in cloth bags that are properly marked "Made in Canada," the individual articles may be excepted from marking.

326-866 O - 80 - 4

Holding.—Articles which are marked "Canada Gold Co." do not meet country-of-origin marking requirements. However, if they reach ultimate purchasers in cloth bags which are properly marked "Made in Canada," the articles may be excepted from individual country-of-origin marking.

(C.S.D. 80-183)

Drawback: Manufacture or Production for Drawback Pruposes; 19 U.S.C. 1313(a)

Date: January 9, 1980
File: DRA-1-RRUCDB NK 210323

Issue.—Whether the filling of an imported glass vial with an antibiotic and transforming the article into an injectable constitutes more than mere packaging to satisfy the manufacture or production requirement of the drawback law.

Facts.—Empty glass vials are imported in an unsterilized state. After importation, the vials are washed and sterilized. The sterilization process consists of passing the vials on a stainless steel belt through a heating chamber exposed to dry heat at a temperature not less than 538° F for a minimum time of 30 minutes. The vials are then conveyed into a cooling section of the equipment where they are cooled by a stream of filtered sterile cool air to room temperature. The vials are immediately filled in a sterile room with a sterile antibiotic powder. The filled vials are sealed with domestic sterile rubber stoppers and domestic aluminum caps which are crimped over the neck of the vials and rubber stoppers. The vials are then labeled and in the condition as processed are injectables ready for use with hypodermic syringes.

Law and analysis.—To allow drawback under section 1313(a), title 19, United States Code, the designated imported merchandise must be used to manufacture or produce new articles for exportation. New and different articles of commerce must emerge from the process.

The mere packing or filling of glass containers with merchandise does not constitute a manufacture or production to satisfy the requirement of the drawback law. However, the facts described above constitute more than a mere packing or filling of glass containers. Glass vials were imported and a process resulted in injectables having a different character and use than the initial imported articles.

Holding.—The importation of empty unsterilized glass vials and the transformation of the glass vials into sterile injectables ready for use with hypodermic syringes constitutes a manufacturing or production process under the drawback law.

(C.S.D. 80–184)

Vessel Stores, Supplies and Equipment: Definition of and Distinction Between Terms for Duty Purposes

Date: January 10, 1980
File: VES-13-05-RRUCDC
104352 PH

To: All Regional Commissioners, Office of Investigations.
From: Chief, Carrier Rulings Branch.
Subject: Memorandum concerning vessel equipment and sea stores.

The attached memorandum concerning the distinction between vessel equipment and sea stores may be of interest to you and vessel repair liquidators, carrier control officers, marine officers, and boarding inspectors within your region.

VESSEL EQUIPMENT AND SEA OR SHIPS' STORES

Title 19, United States Code, section 1446, provides, in part, that vessels arriving in the United States from foreign ports may retain on board, without the payment of duty, all coal and other fuel supplies, ships' stores, sea stores, and the legitimate equipment of such vessels. However, title 19, United States Code, section 1466, provides, in part, that the equipments purchased for a vessel documented under the laws of the United States to engage in the foreign or coasting trade (U.S. vessels) shall, on the first arrival in any port of the United States, be liable to entry and the payment of a duty of 50 percent on the cost thereof in the foreign country.

In construing these statutes, Customs has ruled that section 1446 authorizes the retention on board, duty-free, of the articles named therein, whether laden abroad or in the United States, but that the provisions of section 1466 are also applicable in the case of U.S. vessels (T.D. 50380(5)). Accordingly, at the time of first arrival in the United States of a U.S. vessel from a foreign port at which equipment and stores were purchased, equipments would be subject to duty under section 1466, unless excepted from duty under that provision, and ships' stores and sea stores which were not considered to be "equipments" could be retained on board free of duty. Therefore, the definitions of and the distinction between "equipments" and "ships' stores and sea stores" are crucial ones.

The definition of equipment, for purposes of section 1466, is extensively considered in the case of *H. E. Warner, Trustee* v. *United States*, 28 CCPA 143, C.A.D. 136 (1940). In that case, the court ruled that the term "equipments" relates to more than "such articles as are

designed for use and used in connection with the 'navigation, propulsion, operation, or safety of a vessel.' " The court quoted (at 28 CCPA 143, 148) and utilized a definition of the terms "outfit and equipment" as "including portable articles necessary or appropriate for the navigation, operation, or maintenance of a vessel, but not permanently incorporated in or permanently attached to its hull or propelling machinery, and not constituting consumable supplies." In utilizing this definition to distinguish between "equipment" and "sea stores", the court stated that the terms "outfit" and "equipment" are practically synonymous.

"Sea stores" are generally defined as "supplies for the consumption, sustenance, and medical needs of the crew and passengers during the voyage." (28 CCPA 143, at 150, quoting from *Southwestern Shipbuilding Co.* v. *United States*, 13 Ct. Cust. App. 74, T.D. 40934 (1925). See also; T.D. 22433 and T.D. 49814(4).)

"Ships' stores" are defined to "embrace those articles which form 'part of the body, tackle, apparel, or function of a ship,' being necessary for the ship itself," as opposed to "sea stores" which are "intended for the health and sustenance of the crew or passengers." (T.D. 22433, quoting from *United States* v. *Twenty-four Coils of Cordage*, 28 Fed. Cases 276 (1832)).

It is clear that in some instances the definitions of "equipments" and "ships' stores" overlap. In a letter, dated October 12, 1948, Customs ruled that a spare propeller was both equipment and ships' stores, for purposes of the exemption from entry in title 19, United States Code, section 1441(4). It has been argued before the Customs Court that sections 1446 and 1466 are in conflict (T.D. 43625). However, rather than find a conflict in the statutes, the court ruled that the duty-free provisions of section 1446 apply to ships' stores, etc., on board at the time the vessel last left a U.S. port.

Based upon the foregoing materials, the general rule for this matter can be summarized as follows. If articles which are defined as "equipments" (whether or not they are also "ships' stores") are purchased abroad for a U.S. vessel, and if none of the exceptions under section 1466 are applicable, the articles are dutiable under that section. Articles which are not considered to be equipment and which are within the purview of section 1446 are free of duty if retained on board a U.S. vessel arriving from a foreign port even if purchased abroad. (See, 28 CCPA 143.) Generally, the articles which may be retained on board a vessel free of duty, under section 1446, are consumable supplies including sea stores, as defined above, and articles consumed in their use, unless purchased for repair purposes (T.D. 39340, as modified by T.D. 39507). Listed below are articles which have been held to be dutiable under section 1466, as equipment, and articles which have

been held to be not dutiable as sea stores or consumable supplies. The lists are not exhaustive; the articles in them have been chosen for purposes of illustration.

EQUIPMENT—DUTIABLE

(See also; Customs Circular VES-13-CR, Mar. 11, 1971, which contains a digest of major Customs rulings on the dutiability of foreign repairs and equipment.)

Crockery—plates, cups, and saucers (C.A.D. 136).

Bolts, nuts and packing (T.D. 35824).

Blankets for passengers and crew (C.D. 362).

Towels for glasses, wire steel brooms for cleaning machinery, pot scrubs, ordinary envelopes, various forms for use on vessel, ink bottles, pillow slips, tablecloths, binding cord, resin (13 Ct. Cust. App. 74, T.D. 40934 (1925)).

Shifting boards, grain bags, burlap, and tying rope (these items were dutiable as equipments purchased abroad even though not on board when the vessel returned to the United States) (30 Cust. Ct. 481, Abst. 57403 (1953)).

Varnish and enamels as well as paint (T.D. 39507).

Electric light bulbs and fixtures (T.D. 33386, but see C.I.E. 1759/56 for an exception).

SEA STORES OR CONSUMABLE SUPPLIES—NOT DUTIABLE

Washing soda, kerosene, and turpentine (unless purchased for repair purposes—for example, paint) (T.D. 39340, as modified by T.D. 39507).

Freon gas for vessel refrigerator (C.I.E. 40/52, 366/60, and 877/64).

Food, medicine, cleaning materials, and oil (C.I.E. 18/49).

Snowflake flares (Bureau letter of Jan. 25, 1943).

Rags, glue, and soap powder (Bureau letter of Mar. 17, 1947).

Soap powder (Bureau letter of Aug. 14, 1940).

(C.S.D. 80-185)

Brokers: Statutory Requirement for Corporate Customhouse Broker's License; Effect of Incorporation on Licensed Officers' Individual Liability

Date: January 11, 1980
File: BRO-3-02-RRUEE
711551 JB

This ruling concerns whether an individual customhouse broker intending to incorporate and apply for a corporate customhouse

broker's license must have another corporate officer licensed as a broker, and the effect of incorporation, for Customs purposes, on the broker's individual liability if he is a corporate officer and employee.

Issues.—May the statutory requirement that a corporate applicant for a broker's license have at least two officers licensed as individual customhouse brokers be waived when an individual broker is the sole shareholder of corporate stock? Are licensed officers of a Customs brokerage corporation for Customs purposes personally liable for its transaction of Customs business?

Facts.—The individual broker conducting business as a sole proprietor will be the sole shareholder of the corporation which will comply with all legal requirements in the State where the firm is to be incorporated.

Law and analysis.—19 U.S.C. 1641(a) prescribes that a broker's license shall not be granted to any corporation unless licenses as customhouse brokers have been granted to at least two of the officers of the corporation. This requirement, therefore, may not be waived in the case of a corporation having a sole shareholder who is a licensed broker, and who desires to obtain the benefit of limited liability of transacting business as a corporate entity. Under the corporation's bylaws various operating, administrative, and ministerial duties and responsibilities may be delegated to the licensed officers under the positions and responsibilities described therein. Licenses of customhouse brokerage corporations are deemed revoked by operation of law if they are without at least two officers licensed as brokers for a continuous period of more than 60 days.

Corporate as well as individual brokers conducting business as sole proprietors are held strictly responsible for the acts or omissions of employees within the scope of their employment, and for acts or omissions of employees which, in the exercise of reasonable care and diligence, the broker could have foreseen (19 CFR 111.3(b)). A licensed officer of a corporate broker is required to exercise responsible supervision and control over the transaction of Customs business of the corporation (19 CFR 111.28(a)). If it is established that a licensed officer failed to exercise such supervision and control, or has failed or refused to comply with the duties and obligations of a customhouse broker, such failure or refusal may be deemed grounds for the suspension or revocation of his individual license (19 CFR 111.53).

Pursuant to 19 CFR 111.44, brokers may not limit their liability to a client for a claim arising out of the wrongful or negligent action of the broker in a matter handled by them as a broker. There is no current provision in Customs law or regulations limiting broker's liability to clients under 19 CFR 111.44 by the posting of Customs bond.

Holding.—The requirement that a corporate applicant for a custom-

house broker's license have at least two corporate officers who are licensed as brokers pursuant to 19 U.S.C. 1641(a) may not be waived in the case of a sole shareholder of a corporation's stock seeking the benefits of corporate organization.

Failure to exercise responsible supervision and control or refusal to comply with the duties and obligations of a customhouse broker by a licensed corporate officer does not prohibit disciplinary action looking to the suspension or revocation of the officer's individual license as well as the license of the corporation.

(C.S.D. 80-186)

Carrier Control: Transportation of Panel Truck and Equipment Between U.S. Ports Aboard Foreign-Flag Vessel

Date: May 30, 1980
File: VES-3-20-RRUCDC
104688 JM

This ruling concerns the coastwise transportation of a panel truck with repair equipment by a foreign-flag vessel.

Issue.—Whether a foreign-flag vessel may transport between points in the United States a panel truck containing repair equipment to be used in repairing the vessel while at sea.

Facts.—A company operates a foreign-flag container vessel which brings containers into the United States from foreign ports. The company employs certain repair companies to repair, recondition, and service various types of equipment used on board to facilitate the loading, offloading and movement of such containers. The carrier proposes to place a panel truck containing generators, winches, welders, etc., aboard the vessel at one U.S. port for use in repair work, and to unload the truck and equipment at a second U.S. port. The vessel operator has requested a ruling on the proposed action.

Law and analysis.—46 U.S.C. 883, prohibits (with certain exceptions not relevant here) the transportation of merchandise between points in the United States in a foreign-flag vessel, a foreign-built vessel, or vessel which at one time has been under foreign-flag or ownership.

The word "merchandise" in section 883 has been held by the Customs Service to mean "merchandise" as defined in title 19, United States Code, section 1401, that is, "goods, wares, and chattels of every description." Under such definition the panel truck and accompanying equipment would be considered merchandise for the purpose of section 883.

In a case involving circumstances similar to those in the subject case, Customs held on November 9, 1978 (103639), that transportation of a mobile van and equipment on a foreign-flag vessel between ports in the United States for the purpose of repairing containers aboard the vessel constituted a violation of 46 U.S.C. 883. The ruling was based on a finding that the van and equipment were not used in the stowage, lading, or unlading of cargo in the foreign trade.

Since the proposed action would constitute a violation of the coastwise laws, to allow the proposed transportation would require a waiver of the coastwise laws. There is not general authority to waive the coastwise laws. The only authority is under the act of December 27, 1950, 64 Stat. 1120 (note preceding sec. 1, title 46, U.S.C.) which provides, pursuant to the request of the head of any Federal agency, for the waiver of any of the navigation laws to the extent deemed necessary in the interest of national defense. Such waiver is mandatory on request of the Secretary of Defense and discretionary on the request of the head of any other Federal agency.

Holding.—Transportation of a panel truck and equipment between points in the United States on a foreign-flag vessel for the purpose of effecting repairs to the vessel while at sea constitutes a coastwise transportation of merchandise in violation of 46 U.S.C. 883.

(C.S.D. 80-187)

Drawback: Testing of One Machine as Evidence that Similar Machine Fails to Meet Specifications

Date: January 16, 1980
File: DRA-1-RRUCDB NK
211295
I/A 252/79

Issue.—Whether performance tests by a foreign manufacturer that result in the failure of a (machine) to meet specifications is evidence for drawback that an imported (machine) of a similar type and size also does not meet specifications.

Facts.—A (domestic facility) required a (machine) that under full stress would rotate at (x) revolutions per minute. A (machine) was imported which met this requirement in accordance with tests performed by the foreign manufacturer. Prior to installation at the (domestic facility) the importer was notified by the foreign manufacturer that the (subparts) may fracture and cause extensive damage to the (machine) and requested the importer to return the (part) under warranty obligations for replacement of the (subparts).

Another similar type and size (machine) was tested for performance by the foreign manufacturer and resulted in the fracture of the (subparts). It was determined that the supplier of the (subparts) used in the two (parts) miscalculated the metallurgical composition of the (subparts) which failed to conform to the physical and performance specifications of the manufacturer.

Law and analysis.—Section 1313(c) of title 19, United States Code, provides for drawback upon compliance with applicable regulations on the exportation of merchandise not conforming to specifications. Section 22.32(b) of the Customs Regulations sets forth the documents to accompany the drawback entry to show that the imported merchandise does not conform to specifications including a requirement that the actual owner show in detail in what manner the merchandise does not conform to specifications. Testing by the manufacturer showed that the (part) was imported with a latent defect unknown to the importer and, therefore, it did not conform to specifications and could not be used for its intended use.

Holding.—Testing of a (part) which showed an unknown latent defect due to the composition of its (subparts) that did not meet specifications of the manufacturer, is evidence for drawback that a similar imported (part) of the same composition also does not meet specifications.

(C.S.D. 80-188)

Generalized System of Preferences: Merchandise "Imported Directly" From BDC

Date: January 16, 1980
File: CLA-2:RRUCGC
061352 JLV

Re Decision on application for further review of protest No. 4501-7-000050

This protest was filed against your action classifying certain bottles and chrome plated tops (unassembled salt and pepper shakers) under the provision for other household articles of base metal, not coated or plated with precious metal, in item 654.20, Tariff Schedules of the United States (TSUS), duitable at 8.5 percent ad valorem on an appraised value of $0.0857 per bottle and top unit. The articles are covered by consumption entry No. 113502, dated September 14, 1976, liquidated on April 1, 1977.

Facts.—Separate shipments of chrome plated tops and glass bottles were entered as nonprivileged foreign merchandise in Foreign Trade Zone No. 15 at Kansas City, Mo. All the articles were produced in

Taiwan and shipped directly to the foreign trade zone (FTZ) in separate shipments.

The bottles were shipped in cartons containing 864 bottles. The tops were shipped in master cartons containing inner cartons of 432 tops.

Prior to removal from the FTZ, one carton of bottles and two inner cartons of tops were placed in a large carton. No manipulation other than packaging was performed in the FTZ. Upon removal from the FTZ the repackaged bottles and tops were entered for consumption as duty free under the GSP in item 657.20, TSUS. Customs advanced the rate and value and liquidated under item 654.20, TSUS, at 8.5 percent ad valorem.

The articles were appraised by Customs at $0.0857 per unit, based on the invoiced unit value of $0.0245 for the bottles and the higher of two invoiced unit values for the tops. The tops involved four separate shipments. Each of the four invoices described the tops as "chrome plated ABS tops." Two of the invoices showed a value of $0.0616 per top and two showed a value of $0.0532 per top. Markings by the examining Customs officer on three of the invoices indicate that the tops were plastic. There were no identifying or distinguishing descriptions on the invoices that would explain the value difference in the tops.

A certificate of origin form A accompanied the shipment of bottles and all but one shipment of tops. The form A's were issued for the various shipments of bottles and tops, not for salt and pepper shaker units. It is noted that the 62,640 tops for which no form A was presented were part of a shipment of 101,520 tops brought into the FTZ. The invoice indicates that 38,880 tops had been previously withdrawn.

The protestant claims that the merchandise should be classified under the provision for articles of iron or steel, not coated or plated with precious metal, in item 657.20, TSUS, and duty free under the GSP. Furthermore, the protestant claims that the assessed value is incorrect. The invoice values were for two different types of tops with different values rather than the same tops purchased at two different prices.

Although samples were submitted, they were not forwarded to this office because the samples did not conform to the entered merchandise. One sample had a glass bottom and metal top. The other two had plastic bottoms and plastic tops.

Finally, the claim for GSP treatment is based on the fact that the articles are products of Taiwan, designated as eligible articles, and imported directly within the meaning of section 10.175(c)(1) of the Customs Regulations (19 CFR 10.175(c)(1)).

Issue.—(1) Is the merchandise in question "imported directly" within the meaning of the Generalized System of Preferences (GSP)?

(2) Is the merchandise classifiable under item 654.20, TSUS, as liquidated?

(3) Is the merchandise properly appraised at $0.0857 per unit?

Law and analysis.—There is a question as to whether the merchandise is classifiable as an article in chief value of metal under item 654.20 or 657.20, TSUS. Although originally entered as articles in chief value of metal, the markings by the examining Customs officer on the invoices indicate that the tops were chrome plated plastic rather than metal. There is no other evidence to the contrary.

In headquarters ruling letter, dated February 4, 1977 (file 046461), unassembled salt and pepper dispensers consisting of glass bottles and chrome plated plastic tops were classified as household articles in item 772.03, TSUS. The description and value of those articles are very similar to the description and value of the merchandise at issue. Furthermore, the ruling letter was issued to the same importer involved in this protest.

It is our opinion, therefore, that the merchandise under protest is in chief value of plastics and should be classified in item 772.03, TSUS, and dutiable at the rate of 8.5 percent ad valorem. Articles classifiable under this provision may be entered duty free under the GSP if they otherwise qualify.

The protesting party also claims that the proper appraised value for the merchandise should reflect the actual invoice prices because two different styles of tops are involved. The protestant, however, did not submit either samples of the imported merchandise or documentation as to the cost breakdown for the alleged price differences. To the contrary, the invoice descriptions were the same for all the tops and the manufacturer or seller is the same for all the tops.

The available evidence indicates that the tops are similar and that the Customs officer properly appraised the merchandise by using the higher of the two values for the plastic tops. It is our opinion, therefore, that the value of $0.0619 per top is the correct value used in appraising the imported merchandise.

Finally, there is the issue as to whether the imported merchandise is eligible for duty-free treatment under the GSP. A product of Taiwan classifiable in item 772.03, TSUS, may be entered duty free if it otherwise qualifies under the GSP.

Section 503(b)(1) of the Trade Act of 1974 requires that duty-free treatment with respect to an eligible article shall apply only to an article imported directly from a beneficiary developing country (BDC) into the Customs territory of the United States. In headquarters' letter, dated January 9, 1976 (ORR ruling 76–0079), we held that an

article imported into a FTZ was imported for purposes of the GSP. However, under Executive Order 11888, which implemented the GSP, the article must be both imported and entered for consumption to be eligible for duty-free treatment.

In this case, the tops and bottles were "imported" for purposes of the GSP. However, the articles entered for consumption were unassembled salt and pepper dispensers.

Nonprivileged foreign merchandise is subject to appraisement and classification at the time of its constructive transfer to Customs territory and to the rate of duty in force at the time of its entry for consumption. See section 146.48(e) of the Customs Regulations (19 CFR 146.48(e)). For purposes of the GSP, an article must be classified under a tariff provision designated as eligible for the GSP. Therefore, the salt and pepper dispensers, not the individual components, must satisfy the criteria for the GSP.

In this case, the entered articles (salt and pepper dispensers) were not the articles imported from Taiwan. They consist of components imported into a FTZ from Taiwan.

The importer cites section 10.175(c)(1)(ii) of the Customs Regulations (19 CFR 10.175(c)(1)(ii)) as the basis for considering the entered article as "imported directly" under the GSP. That provision, however, applies to merchandise shipped through a free trade zone in a BDC. If such merchandise is merely repacked into other containers and does not enter into the commerce of that BDC prior to shipment to the United States, then that merchandise may be considered "imported directly" for purposes of the GSP.

It is our opinion that an article is not imported directly if, as in this case, the repacking operations are performed in a FTZ other than one established by a BDC. The purpose of the GSP is to further the economic development of developing countries. The provision in section 10.175(c)(1)(ii) is an exception which is not contrary to this purpose. It does not, however, encompass the operations performed in a FTZ established by the United States or a non-BDC country.

A procedural requirement for duty-free entry under the GSP is submission of a certificate of origin form A for the eligible articles. In this case, the form A's relate to the tops and to the bottles, not to the articles as entered. Therefore, the entry is deficient in this respect.

Holding.—The claims of the protesting party are denied. However, the merchandise is classifiable as household articles of plastics, in item 772.03, TSUS, and dutiable at the rate of 8.5 percent ad valorem. The entry should be reliquidated to reflect this.

The claim for GSP status is denied because the merchandise as entered for consumption was not imported directly within the meaning of the GSP.

(C.S.D. 80-189)

Bonds: Movement by Private Carrier of Its Own Goods; Section 112.11(a)(4), Customs Regulations

Date: January 18, 1980
File: BON-3-RRUCDB B
211215

Issue.—May a private carrier's bond (Customs form 3588) be accepted from a private carrier for transportation of his own goods as ship's chandler to vessels berthed in nearby ports when no bonded common carrier facilities are reasonably available?

Facts.—A firm, operator of a bonded public warehouse, does business as a ship's chandler, selling ships' supplies to various vessels berthed at Chester and Philadelphia, Pa., and Wilmington, Del. All merchandise transported by the chandler belongs to that firm. The District Director at Philadelphia has determined that bonded common carrier facilities are not reasonably available, as set out in 19 U.S.C. 1553, and plans to approve an application by the chandler for designation as a private bonded carrier and accept a private carrier's bond on Customs form 3588. The field also plans to accept a term bond for exportation or transportation (Customs form 7559).

Law and analysis.—The chandler cannot be designated a private bonded carrier, as set out in 19 U.S.C. 1551, and Customs cannot accept the chandler's private carriers bond. Section 1551 provides in relevant part:

> A private carrier, upon application, may in the discretion of the Secretary, be designated * * * a carrier of bonded merchandise * * * subject to such regulations * * * as the Secretary may prescribe * * *.

The regulations prescribed are set out in section 112.11(a)(4)(i)(ii)(iii)(A)(B)(C), Customs Regulations. Regardless of the availability of bonded common carrier facilities, a private bonded carrier can be designated as such and a private carrier's bond can be accepted if that person meets the requirements of that regulation. The applicant in this case does not meet the movement requirements of subsections (iii)(A)(B)(C) of the regulations, which are:

> (iii) The merchandise is to be transported: (A) From the port of importation, or port where entered for warehouse, to the private carrier's Customs bonded warehouse or bonded container station for physical deposit; (B) from the private carriers' Customs bonded warehouse or bonded container station to another Customs bonded warehouse for physical deposit; or (C) if for exportation, from the private carrier's Customs bonded warehouse or bonded container station to a Customs bonded warehouse at the port of exportation.

It is clear from a reading of those subsections that a designated private carrier cannot transport merchandise under bond from that carrier's bonded facilities for direct lading on a vessel for exportation.

The private carrier's bond (Custom Form 3588), which the Customs field office plans to accept from the applicant, specifically refers to regulations under section 551 of the Tariff Act of 1930, as amended (19 U.S.C. 1551). It is clear this bond cannot be accepted in this case.

Sections 1551 and 1553 of title 19, United States Code, are separate and distinct, and have no relation to each other. Section 1553 allows the transportation of bonded merchandise destined for a foreign country to be transported otherwise than by a bonded common carrier in places where no bonded common carrier facilities are reasonably available, under such regulations as the Secretary shall prescribe. The regulations cited above are not applicable to carriers operating under this statute when bonded facilities are not reasonably available. The regulation which is applicable is section 18.20(b) of the regulations, which requires that a bond for exportation or transportation or for transportation and exportation (single entry) (Customs Form 7557) be accepted in these cases.

Holding.—The applicant is not eligible for designation as a private bonded carrier under 19 U.S.C. 1551 because of the applicable regulations; therefore, a private carrier's bond cannot be accepted from that firm. Because bonded common carrier facilities are not reasonably available, under the provisions of 19 U.S.C. 1553, a bond for exportation or transportation or for transportation and exportation (single entry), as directed by section 18.20(b) of the regulations, may be accepted. The movements contemplated by the applicant can be accomplished in this manner.

Possible alternative.—Although not directly allowed by a regulation, since the applicant will be transporting under bond on a continuous basis, we see no reason why a term bond for transportation and exportation, on Customs form 7559, or a general term bond (which includes a bond for transportation and exportation), on Customs form 7595, cannot be accepted.

(C.S.D. 80-190)

Entry: Transfer of Liability for Duties Prior to Completion of Entry Process

Date: January 18, 1980
File: BON-1-RRUCDB MM 210751

Issue.—Whether a broker is contractually or statutorily liable for payment of increased or additional duties on merchandise released in

his name under his bond when the entry summary for such merchandise is filed in the name of the actual owner under the owner's bond.

Facts.—Actual owner A has on file with Customs a valid term or general term bond. Customhouse broker B makes an entry in his own name, obligating his own bond. Within the prescribed time B files the entry summary in the name of A.

Law and analysis.—Section 484(a), Tariff Act of 1930, as amended (19 U.S.C. 1484(a)), provides that the consignee of imported merchandise must (1) make entry by filing documents (entry documentation) necessary to determine whether the merchandise may be released from Customs custody, and (2) file any other documentation (entry summary documentation) necessary to enable Customs to assess duties, collect statistics on imported merchandise, and determine whether other requirements of law or regulations are met.

Section 485(a), Tariff Act of 1930, as amended (19 U.S.C. 1485(a)), provides for certain declarations to be made by the consignee making an entry under 19 U.S.C. 1484. Further, section 141.19 of the Customs Regulations requires the consignee in whose name the entry is made to execute the declaration on the entry summary for merchandise entered for consumption, warehouse, or temporary importation under bond, or the rewarehouse or bonded manufacturing warehouse entry.

The petitioner contends that if the entry documentation is filed by a broker in his name and the entry summary documentation containing the declaration is filed in the name of the actual owner then the statutory provisions of 19 U.S.C. 1485(a), will not be complied with because the declaration will not have been made by the person in whose name entry was made.

As noted above, the entry process is not completed for purposes of 19 U.S.C. 1484 and 1485, until the entry summary documentation is filed with Customs. Therefore, it is Customs opinion that when merchandise is released in the name of the broker and the entry summary documentation is made in the name of the importer, the consignee in whose name entry is made for purposes of 19 U.S.C. 1485(a), would be the importer in whose name the entry summary is filed. Substitution of a principal for an agent prior to or at the time of filing the entry summary would not violate the entry declaration requirement of 19 U.S.C. 1485(a), because the entry process has not been completed.

Concerning the bond liability of the two parties, section 142.4(b)(2) reads:

> If entry is made in the name of an agent, supported by the agent's bond, or in the name of a principal, supported by the principal's bond, and the entry summary thereafter is filed in the name of the other party, the party named in the entry summary shall file one of the bonds enumerated in paragraph (a) of this section. In this circumstance, the bond obligation of the

party in whose name entry was made shall be terminated, as to any liability which may accrue after the bond filed by the party named in the entry summary becomes effective, and the party filing the entry summary need not file the separate declaration of the actual owner and the superseding bond otherwise required under section 141.20 of this chapter.

Holding.—If the broker's liability is transferred to the actual owner prior to the completion of the entry process, then his contractual and statutory liability for payment of increased or additional duties is terminated upon completion of that transfer.

(C.S.D. 80-191)

Constructed Value: Dutiability of Payments for Use in the United States of Patented Process

Date: Jauuary 21, 1980
File: RRUCV: BS
061493

Issue.—Whether certain royalties paid to obtain the use of patents and know-how in connection with a "precarbon process" are dutiable.

Facts.—The importer, a manufacturer of steel and steel products, engaged the German engineering firm of (name) to design coke batteries for use in the United States. Certain foreign components were obtained with (name's) assistance to be used in the manufacture or assembly of the batteries. The importer states that for the most part these components were standard or off-the-shelf products of the third party manufacturers and comprised approximately one-fourth or less of each of the completed batteries. Certain engineering assists were provided by (name) and/or the importer in connection with some of these battery components and the dutiability of these assists is not in issue.

In operating the completed coke batteries in the United States, the importer utilizes a "precarbon process", which involves a method of preheating coal before it is fed into the coke ovens. The right to use this process was granted to the importer pursuant to a license agreement between itself and (name). The agreement provided that (name) furnish to the importer "* * * all know how, information, and material to enable (the importer) to have manufactured and to erect, put on stream, operate and maintain the process plant * * *". The rights and technical information were granted to (name) for the benefit of the importer by a third party (X), of West Germany. For the first process plant the importer made a royalty payment of $625,000 and for the second plant $800,000. The two plants related to the two coke batteries herein involved.

In the opinion of the Area Director, New York Seaport, the precarbon process is an integral part of the production of the foreign components used in construction of the coke batteries, and therefore the royalties paid for the know-how, technical information, etc., are dutiable costs of production.

On the other hand, the importer argues that the know-how, data, and technical information granted through the purchase of the precarbon process are not connected with the manufacture of the imported components and therefore the royalties paid for such process are not dutiable. In a submitted affidavit, the president of (name), states that to the best of his knowledge no technology or engineering originating from (X) was used to produce any articles, machines or equipment imported to the United States for use in the coke batteries. A similar statement is made by the importer's manager for purchasing—construction. However, (name) does advise that certain specification data, such as dimensions, tolerances, capacities and temperatures were transmitted to every manufacturer of machines and equipment in order for them to prepare a contract bid for the particular components involved. (Name) states that these specifications did not result in any saving for the manufacturers in design or construction work.

Law and analysis.—Section 402(d)(1) of the Tariff Act of 1930, as amended, provides in pertinent part that the constructed value of imported merchandise shall include the cost of materials and of fabrication or other processing of any kind used in producing such or similar merchandise.

In order to satisfy statutory constructed value, it is the actual cost of manufacture and not the manufacturer's actual cost that must be determined. See *Goodrich-Gulf Chemicals Inc.* v. *United States*, R.D. 11733 (1971). Accordingly, the essential question is whether the know-how and other information acquired by the importer pursuant to the license agreement was necessary to, and was used in the production of, the imported components. Thus, in ORR 74-0343, we held that a royalty payment for the right to use a patented process which in turn was an integral part of the assembly of certain merchandise was considered to be part of constructed value.

Holding.—The record establishes that the know-how, technical information, and other data acquired by the importer in order to construct the precarbon process were not used to produce the imported components. While certain dimensions, tolerances, etc., were furnished free of charge to the manufacturers, this information was in the nature of specifications, and was not an integral part of the production of the components. Rather, such information appears to

be " * * * instructions which every buyer must give to a manufacturer." See *Exbrook, Inc.* v. *United States* 69 Cust. Ct. 224 (1972).

Under the circumstances, the royalties paid under the license agreement are not dutiable.

We must emphasize, however, that royalty payments made for processing techniques, equipment, know-how, technical assistance, designs, and other types of production assists required to produce imported goods are dutiable. Thus, what the royalty payment is made for will determine whether or not that payment constitutes part of dutiable value. Each case must be examined in light of its own facts, and our holding in this situation is applicable only to the particular circumstances involved.

(C.S.D. 80–192)

Classification: Grass Skis

Date: January 23, 1980
File: CLA–2: RRUCGC
061608 c

This request for internal advice was initiated by the law firm of (name), in a letter dated February 28, 1979.

Facts.—The grass skis in issue measure approximately 2 feet in length and have a set of rollers attached to a flexible belt. This assembly rotates around a metal track to which is affixed a binding which is designed to hold a conventional snow ski boot. It is assumed that these grass skis are manufactured in a country whose products are entitled to column 1 rates of duty.

The inquirer maintains that the grass skis are classifiable under the eo nomine provision for skis and snowshoes, in item 734.96, Tariff Schedules of the United States (TSUS).

Issue.—Whether the grass skis involved are essentially the skis provided for in item 734.96, TSUS, or are classifiable under the provision for sport equipment not specially provided for, in item 735.20, TSUS.

Law and analysis.—The inquirer states that grass skis were not in existence at the time the tariff schedules were enacted. However, he points out that tariff acts are made for the future as well as the present and tariff descriptions are designed to cover merchandise not known to commerce at the time the tariff statute was created. See *Davies Turner & Co.* v. *United States*, 45 CCPA 39, C.A.D. 669 (1957), and *Smillie & Co.* v. *United States*, 12 Ct. Cust. Appls. 365, T.D. 40520 (1924).

In order to show that the grass skis in issue are essentially those

skis provided for in item 734.96, TSUS, the inquirer states the following:

1. The grass skis are used for skiing on grass.
2. They can and are used on the same slopes which are used for snow skiing.
3. The snow skier can practice his proficiency and movements when there is no snow on the ground in preparation for the snow skiing season.
4. The grass skis give the skier the same sensation of movement as in snow skiing.
5. The grass skis are sold primarily by snow ski shops.
6. Ski poles used in snow skiing are also necessary in grass skiing.
7. Ski boots which skiers use in snow skiing are also used with the grass skis.

The inquirer further states that although the grass skis are sports equipment provided for in item 735.20, TSUS, they are more specifically provided for under the eo nomine provision for skis, in item 734.96, TSUS.

It is to be noted that this office, in a ruling abstracted as T.D. 66–7(19), held that light skis on wheels with rubber tires and metal bindings thereon, used for training on dry land, are classifiable as skis, in item 734.96, TSUS.

Holding.—In light of the above referenced ruling and the fact that skis are eo nomine provided for, it is our view that the grass skis in issue are classifiable under the provision for skis and snowshoes, in item 734.96, (TSUS), dutiable at the rate of 8 percent ad valorem.

(C.S.D. 80–193)

Constructed Value: Addition for Profit Where no Profit is Realized

Date: January 24, 1980
File: RRUCV JV
061853

This request concerns the proper valuation of certain ladies outerwear imported from the Dominican Republic. The merchandise was appraised on the basis of constructed value, section 402(d), Tariff Act of 1930, as amended.

Issue.—Propriety of adding an amount for profit to the constructed value of the merchandise undergoing appraisement where it is established that the related manufacturer experienced a loss due to high startup costs. The basis of appraisement is not in dispute.

Facts.—The transactions involve "related parties", as defined in section 402(g), Tariff Act of 1930, as amended. There are no other producers of merchandise of the same class or kind in the Dominican Republic. The present controversy arose over a contemplated value advance based on the addition of a factor of 8 percent for profit in the calculation of the appraised value of the merchandise. Counsel for the importer claims that the proposed addition is unwarranted since the manufacturer failed to earn a profit for the period involved.

Law and analysis.—As you know, section 402(d)(2) requires that when the appraising officer is determining the general expenses and profit factor to be included in constructed value he must first look to what is usual in the production of merchandise of the same general class or kind in the country of exportation. Only where there are no other producers of the same general class or kind in the country of exportation, may resort be had to the actual general expenses and profit of the producer of the imported merchandise. In such cases, the actual general expenses and profit of the producer becomes that which is usual for purposes of satisfying the statute.

Likewise, where the foreign producer sells to its parent company who is the sole importer of merchandise of that class or kind from the country of exportation, the producer's actual general expenses and profit will be adopted for constructed value purposes unless there is persuasive evidence that the amount included for general expenses and profit is not fairly reflective of an amount usually reflected in an arms-length transaction. Where evidence exists that by reason of the relationship between importer and exporter, the amount included for general expenses and profit does not fairly reflect the amount required by the statute, the transaction may be disregarded, and, if no unrelated transactions are available for consideration, the determination of the addition for general expenses and profit under section 402(d)(2), Tariff Act of 1930, as amended, would be based on the best evidence available as to what the general expenses and profit would have been if the transaction had occurred between unrelated parties.

Under the old law, general expenses and profit were provided for separately in different subdivisions and were required to be proven as separate items in establishing a value on the basis of constructed value. In addition, the old law provided for minimum percentages for general expenses and for profit. The Customs Simplification Act of 1956 and amended section 402(d), brought the two components together in a single subdivision. The new law, as provided for in section 402(d)(2), eliminates these percentages, but requires that an addition be made for the usual general expenses and profit as a single element of value. See *Fashion Ribbon Co.* v. *United States*, 62

Cust. Ct. 1015, A.R.D. 252 (1969). In view of this action and the interpretation given to the old law, it is evident that Congress did not require a separate itemization for general expenses and profit under section 402(d).

It is undisputed that the manufacturer's failure to experience a profit in this case is due entirely to its extraordinary general expenses, incurred by high startup costs. It would naturally follow from such a situation that profits would be either nonexistent or significantly lower than expected. We find nothing in the record to indicate that a profitable operation abroad was not intended or reasonably anticipated. This is evident by the fact that the parties operate as separate profit centers each responsible for its own profitability. Furthermore, there is no evidence to suggest a shifting of profits (in whole or in part) from subsidiary to parent so as to give rise to the establishment of a rigged or special intercompany price for the purpose of avoiding duties. On the contrary, the 1978 profit and loss statements of the parent company reflect minimal profits on sales in the United States of the merchandise undergoing appraisement. These minimal returns, in our opinion, would undoubtedly preclude a shifting of profits for the purpose mentioned. In view of these facts, and since the appraising officer has apparently accepted the manufacturer's actual expenses as usual, it necessarily follows that he must also accept its actual profit of zero.

Counsel is correct in asserting that Customs cannot have it both ways. It cannot on the one hand accept the actual general expenses of the manufacturer regardless of how extraordinary they may be and on the other hand reject the resulting failure to earn a profit on the mere assumption that a profit would usually be reflected in an arm's-length sale. There must be something more. That is, there must be persuasive evidence that by reason of the relationship of the parties, the amount included for general expenses and profit as a single element of value does not fairly reflect the amount required by the statute. It is only then that the transaction may be disregarded and resort be had to utilizing all reasonable ways and means to arrive at the addition for purposes of satisfying the statute. We find no evidence, much less persuasive evidence, in this case that the amount for general expenses and profit is other than would be reflected if the transaction had been at arm's-length. Since no basis either in law or in fact exists upon which to support the proposed addition, it must be rejected.

Holding.—A profit factor should not be added to the constructed value of imported merchandise where it is established that the related manufacturer's (sole producer of merchandise of that class or kind in the country of exportation) failure to earn a profit is due entirely to its extraordinary general expenses, which the appraising officer has accepted as being usual (actual) for the purpose of satisfying the

statute. In order to disregard the transaction between the related parties and make the appropriate addition, there must be persuasive evidence that by reason of their relationship, the amount included for general expenses and profit as a single element of value does not fairly reflect the amount required by the statute.

(C.S.D. 80-194)

Vessels: Landing and Modification of Fish Nets Which Are the Equipment of Foreign-Flag Fishing Vessels

Date: January 25, 1980
File: VES-13-RRUCDC
104430 JL

This ruling concerns the landing and modification of fish nets which are equipment of foreign-flag fishing vessels.

Issues.—(1) May imported fish nets be supplied to foreign-flag vessels being constructed in American shipyards?

(2) It is permissible to offlade fish nets which are vessel equipment onto a dock for modification without the payment of duty?

Facts.—Fish nets of foreign origin are to be imported and supplied directly to foreign-flag fishing vessels which are under construction at American shipyards in San Diego and Tacoma. After the fish nets are laded onboard the vessel, it is desired to offlade them to the dock to modify them. The modifications consist of attaching U.S. origin float lines and chain lead lines.

Law and analysis.—In *Otte* v. *United States*, T.D. 36489 (USCCA 1916), it was held that fish nets are ships' equipment.

19 U.S.C. 1446 provides that vessels arriving in the United States from foreign ports may retain on board without the payment of duty the legitimate equipment of such vessels, but if landed and delivered it shall be considered and treated as imported merchandise.

19 U.S.C. 1309(a)(2) provides that articles of foreign origin may be withdrawn from any Customs bonded warehouse or from continuous Customs custody elsewhere than in a bonded warehouse free of duty for supplies (including equipment) or repair of foreign vessels employed in the fisheries or in the whaling business.

The provisions of 19 U.S.C. 1309(a)(2) are operative in the case of foreign vessels actually employed in the fisheries or in the whaling business. Under the factual situation presented, the relief afforded by section 1309 is only available when the nets in question are delivered to the vessel subsequent to their delivery and after being put into service in the fisheries under a foreign flag.

19 U.S.C. 1446 would not apply as the vessel would not have arrived in the United States from a foreign port. The nets would therefore not be subject to duty upon their offlading from the vessel for modification on the dock. However, Customs control is necessary because 19 U.S.C. 1453 provides that if any merchandise is laden on, or unladen from, any vessel without a special license or permit therefor issued by the District Director, the master of such vessel and every other person who knowingly is concerned, or who aids therein, in removing or otherwise securing such merchandise shall each be liable to a penalty equal to the value of the merchandise so laden or unladen, and such merchandise shall be subject to forfeiture. If the value thereof is $500 or more, the vessel on or from which the same shall be laden or unladen shall be subject to forfeiture. Accordingly, before such nets may be unladed, an application for a permit or special license shall be made by the master, owner, or agent of the vessel on Customs form 3171. The District Director of Customs' office at the port concerned will determine what supervision, if any will be necessary during the entire operation.

Holding.—(1) Fish nets of foreign origin dedicated to use as ship's equipment may be laded aboard a foreign-flag vessel constructed in an American shipyard free of duty under 19 U.S.C. 1309(a)(2) subsequent to its completion and registry under a foreign flag.

(2) Such nets, after being laden aboard the vessel, may be offladen for modifications on the dock under a permit or a special license for lading and unlading granted by the District Director of Customs.

(C.S.D. 80-195)

Vessel Repairs: Dutiability of Warranty Work, Inspections and Surveys

Date: January 25, 1980
File: VES-13-18-RRUCDC
104344 JL

To: Regional Commissioner of Customs, Los Angeles, Calif.

This is in reference to your letter of October 30, 1979, in which you requested a ruling pursuant to section 4.14(k), Customs Regulations, on a petition filed by (U.S. company) for relief from duties accruing under section 466, Tariff Act of 1930, as amended, on the cost of repairs covered by vessel repair entry 186775, dated May 17, 1979, regarding the (vessel No. 3).

The file discloses that the (vessel No. 2), according to the petitioner formerly the (vessel No. 1), was sold to (foreign company), (foreign city), Japan; that the vessel's document was surrendered; that the bow and stern sections were removed from the vessel and scrapped;

that the midbody was used in the construction of the (vessel No. 3); and that a new official number was issued to the resulting vessel by the U.S. Coast Guard. The Coast Guard has informed us that the (vessel No. 3), official No. 594374, was built in 1977 in Japan; that the vessel was issued a permenant register on September 8, 1978; and that its home port is listed as Wilmington, Del.

On August 3, 1979, you transmitted to (U.S. company) a copy of Customs form 226 reflecting tentative liquidation of vessel repair entry No. 186775. On September 28, 1979 (U.S. company) filed a petition for reconsideration under 4.14(k), Customs Regulations, expressing its position that the items contained in the vessel repair entry which are listed as "Guarantee Item—No Charge" and that those items generally referred to as "modifications" are duty free.

In your August 3 letter, you expressed the opinion that the "No Cost" items performed in Japan are dutiable because they constitute "prepaid foreign repairs". (U.S. company's) position, as expressed in their September 28 petition, is that charges for warranty work performed by the builder of the vessel are not additional costs which (U.S. company) has to bear, as opposed to a service contract where such contract requires additional moneys to maintain equipment.

In a ruling to you concerning the vessel (name), case No. 104319, dated December 12, 1979, on pages 4 and 5 we discussed the proper treatment of no cost guarantee items and the petitioner's position that these were not dutiable. We held that remission of duty on such items is not authorized by the vessel repair statute, 19 U.S.C. 1466, and that to extend the "one round voyage" rule abstracted in T.D. 71-83, and the holding in ORR ruling 23-69 would be unwarranted because it would be contrary to the purpose of the statute, i.e., protection of American shipyards and the manufacturers of American parts. Accordingly, following the ruling in case No. 104319 we hold that warranty work performed in a foreign shipyard under a contract is dutiable to the extent that such work would have ordinarily been dutiable under the vessel repair statute.

We note on (foreign company) invoice 352 228600-2 that item Nos. G-0177, Sump Survey, and G-0130, Gyro Pilot Check, are inspections or surveys which did not lead to repairs. Following the holding in CIE 429/61, these items which did not lead to dutiable repairs are not dutiable under the statute and should be liquidated accordingly

In analysing the invoices and the Customs forms 226 which were submitted with the petition and executed by the company's regional manager on October 1, 1979, we hold that the following items which the petitioner contends are nondutiable by virtue of being modifications to the hull and fittings of the vessel are instead dutiable as either repairs or equipment purchases and/or installation expenses:

Bill No. 352-228600-03

1. Engine Department.—Item No. 1 entails the installation of a new air compressor which is "owner furnished". If this item was purchased overseas it is dutiable under the statute pursuant to the holding in CIE 94/60, even if it is of U.S. manufacture. In any case, the installation expenses are dutiable. The following items are also dutiable:

(3) fire extinguisher (repair).

(4) low oil outlet pressure alarm (repair).

(5) spare parts furnished (equipment purchases).

(6) flow meter installed in cylinder oil tank (equipment purchases).

(7) modified meters (repairs).

(8) installed steel board in machine shop (equipment purchase and installation).

(9) modified oil mist detector (repair).

2. Electric department.—The following are dutiable:

(1) installation of 34 time lapse meters (equipment purchases and installation).

(2) owner-supplied menn pressure calculator installation (equipment installation). The calculator may be dutiable per CIE 94/60.

(3) engineroom telephone alarm modifications (repairs).

(4) huge vessel light installation (equipment purchase and installation).

Invoice No. 352-228600-4

1. Engine department.—

(10) propellor blades polished (repair).

(15) spare impeller parts relocated from storeroom to engine room (installation of equipment).

(17) relocation of welding machine (equipment installation).

2. Electric department.—

(5) space heater relocated (equipment installation).

Turning now to (foreign company) invoice No. 352-228600-01, we note that you have tentatively liquidated 12,117,900 yen in survey costs as dutiable. We note that on the copy of the original Customs form 226 submitted by (U.S. company) these items are listed as "Survey (Warranty)" but a reading of items 3 through 47 therein indicates that the work performed probably was conducted in order to comply with U.S. Coast Guard and ABS survey requirements. Headquarters ruling No. 103480, copy enclosed, which clarified CIE 429/61, held that where a survey is undertaken to meet the specific requirements of a governmental entity, classification society, insurance carrier, etc., the cost is not dutiable even when dutiable

repairs are effected as a result thereof. Therefore, if the above-mentioned items were conducted as part of an ABS and/or U.S. Coast Guard survey, they would not be dutiable.

(C.S.D. 80-196)

Vessel Repairs: Application for Relief From Payment of Vessel Repair Duties; Timeliness of Filing; Section 4.14(e), Customs Regulations

Date: January 25, 1980
File: VES-13-18-RRUCDC
104314 JL

This ruling concerns an application for relief from payment of vessel repair duties filed pursuant to section 4.14(e)(2), Customs Regulations.

Issue.—Was the application for relief from payment of vessel repair duties timely filed?

Facts.—A vessel repair entry was filed for the (name of vessel) on March 24, 1977, in Houston, Tex. The entry was subsequently liquidated and marked "posted" on March 3, 1978. On May 24, 1979, counsel for the owners of the vessel filed a request for reconsideration asking that Customs reconsider its liquidation on "equitable grounds."

Counsel contends in its application as follows:

1. Receipt by the vessel owner of the certified notice of liquidation in the mails was delayed beyond the 90-day period subsequent to the day of liquidation because the address used by Customs was incorrect.
2. The referral by Customs personnel of representatives of the owner to the San Francisco regional office on August 24, 1978, delayed the identification of the liquidation problem by proper personnel of the owner, thus causing identification of the problem to be delayed beyond the 90-day period.
3. There is no record in the owner's files of its receiving the preliminary notice of liquidation.
4. The problems which have occurred regarding the receipt of the notices were not due to any intentional negligence or wrongdoing by the owners.
5. No vessel repair duties are due on the entry because the vessel qualifies as a special purpose vessel within the meaning of 19 U.S.C. 1466(e).

Law and analysis.—Section 4.14(e), Customs Regulations, provides that an application for relief from payment of vessel repair duties may be filed with Customs alleging that the items covered thereby are within the provisions of 19 U.S.C. 1466(c) (now (e)) and that it shall be filed within 90 days from the date of entry. Extensions of time are authorized before liquidation but the last sentence of section 4.14(e) provides as follows:

Inasmuch as an unprotested liquidation insofar as it relates to the classification of items under section 466(a) of the Tariff Act of 1930, as amended, is final at the expiration of 90 days, a subsequent application in regard to such classification cannot be considered in the absence of a timely protest.

Section 159.9(c), Customs Regulations, provides as follows:

> Date of liquidation. The bulletin notice of liquidation shall be dated with the date it is posted or lodged in the customhouse for the information of importers. The entries for which the bulletin notice of liquidation has been prepared shall be stamped "liquidated," with the date of liquidation, which shall be the same as the date of the bulletin notice of liquidation. *Such stamping shall be deemed the legal evidence of liquidation.* [Italic supplied.]

Section 174.12(e) provides in relevant part as follows:

> Time of filing. Protest shall be filed, in accordance with section 514, Tariff Act of 1930, as amended (19 U.S.C. 1514).
> Within 90 days after either:
> (1) the date of notice of liquidation or reliquidation in accordance with sections 159.9 or 159.10 of this chapter; * * *

In applying the above to the facts of this case, we find that the application for relief under section 4.14(e) was not filed before liquidation, the liquidation was accomplished approximately 1 year following the filing of the entry, the entry was stamped with the date of liquidation which is the legal evidence of liquidation pursuant to section 159.9(c), and no protest was filed as required by section 174.12(e) within 90 days after the date of notice of liquidation. Inasmuch as the bulletin notice of liquidation is the only legal notice of liquidation required of the Customs Service, we find the arguments pertaining to the nonreceipt by the petitioner of either a preliminary notice of liquidation or a final notice of liquidation to be irrelevant. We do note that the address used in mailing the certified notice of liquidation to the vessel owner was that which was supplied in the vessel repair entry.

As to the argument that the problems were not due to intentional negligence or wrongdoing on the owner's part and that the application should be considered on equitable grounds, we find that we do not have the authority to consider this petition inasmuch as the District Director's classification of the items as dutiable under 19 U.S.C. 1466, is not subject to reconsideration once a liquidation has been accomplished, unless a valid protest was filed. As can be readily seen from the above, no protest was timely filed and, therefore, the liquidation is binding on all parties thereto.

Holding.—The application for relief was not timely filed as it was submitted more than 90 days subsequent to liquidation of the entry in question.

(C.S.D. 80-197)

Vessel Repairs: Nondutiability of Lubricant and Refrigerant as Consumable Supplies

Date: January 25, 1980
File: VES-13-18-RRUCDC
104211 JL

This ruling concerns a petition filed under section 4.14(k), Customs Regulations, for relief from payment of vessel repair duties.

Issues.—(1) Is Capella "D" Waxfree oil a preservative and therefore dutiable under the vessel repair statute, or is it a lubricant which is a consumable supply and not dutiable?

(2) When propylene glycol is used as a refrigerant in a refrigeration system on a vessel, is it dutiable as a preservative or is it nondutiable by virtue of being a consumable supply similar to freon gas?

Facts.—Following a South American voyage, an American flag vessel declared and entered purchases of freon gas, Capella "D" Waxfree oil and propylene glycol. The Regional Commissioner tentatively classified the Capella "D" and the propylene glycol as articles which are preservative in nature and therefore dutiable under 19 U.S.C. 1466. The vessel owner has filed a peitition for relief under section 4.14(k), Customs Regulations, maintaining that propylene glycol mixed with water is a secondary refrigerant in the refrigeration system on the vessel, Freon 11 being the primary refrigerant. The owner further maintains that Capella "D" Waxfree oil is a lubricant used in the compressor of the refrigeration system and is therefore a consumable supply.

Law and analysis.—19 U.S.C. 1466(a), the vessel repair statute, provides in relevant part as follows:

> The equipments, or any part thereof, including boats, purchased for, or the repair parts or materials to be used, or the expenses of repairs made in a foreign country upon a vessel documented under the laws of the United States to engage in the foreign or coasting trade, or a vessel intended to be employed in such trade, shall, on the first arrival of such vessel in any port of the United States, be liable to entry and the payment of an ad valorem duty of 50 per centum on the cost thereof in such foreign country * * *.

T.D. 39340 held in part that it appears to be well established that consumable supplies which are consumed in their use aboard a vessel would not be subject to duty under the vessel repair statute.

CIE 887/64, dated May 26, 1964, held that freon gas for vessel refrigeration systems is a consumable supply and its purchase in a foreign country, regardless of whether it is in connection with repairs

or whether the quantity purchased exceeds the quantity on board, will not subject it to vessel repair duties.

Headquarters case No. 101242, dated March 31, 1975, held that propylene glycol used as a brine for refrigerating machinery and the air-conditioner on a vessel was not a consumable supply because it could be recovered if desired.

While propylene glycol and freon gas are not identical substances, when used in refrigeration machinery as a heat transfer medium they serve precisely the same function. Inasmuch as freon gas for vessel refrigeration systems has long been held to be a consumable supply, propylene glycol when used in the same manner in the same type of equipment should also be considered a consumable supply not subject to duty under the vessel repair statute, notwithstanding the holding in case 101242.

CIE 18/49, dated January 12, 1948, identified oil as an item which is free of duty under the vessel repair statute as a consumable supply. Since Capella "D" Waxfree oil is a lubricant used in the compressor of the vessel's refrigeration system, it is a consumable supply and is not subject to duty under the vessel repair statute.

Holdings.—(1) Capella "D" Waxfree oil is a consumable supply when used as a lubricant in the compressor of a refrigeration system and is nondutiable under the vessel repair statute.

(2) Propylene glycol, when used as a refrigerant, is a consumable supply and is not dutiable under the vessel repair statute.

Effect on other holdings.—Case No. 101242 overruled.

(C.S.D. 80–198)

Classification: Parts of a Rotary Tilling Device

Date: January 28, 1980
File: CLA-2:RRUCGC
062304 jh

In your letter of May 18, 1979, submitted on behalf of your client (name), you request the tariff classification of component parts for a rotavator, product of France. You state that the rotavator will be manufactured in the United States using a mixture of American parts together with the imported parts.

The imported parts consist of a filler plug, inspection plug, level plug, setscrew, locknut, spring washer, nut, and gasket, all of which are used in a chain case cover and a jackshaft assembly, rotor drive shaft housing assembly, and a stub axle housing assembly.

The rotavator is a rotary tiller which cuts and lifts the soil in preparation for planting. It is mounted behind a farm tractor by

means of a 3-point hitch device. It is powered directly from the tractor power takeoff, through a universal drive shaft, to a single-speed transmission. The jackshaft then transmits the power from the gear box to the side chain drive. Power is then conveyed through the rotor drive shaft housing to the transverse rotor to which are fixed the soil working blades.

It is your position that the component parts should be classified under the provision for parts of machinery for soil preparation, in item 666.00, Tariff Schedules of the United States (TSUS), and entitled to duty-free entry. We agree that the articles are described in item 666.00, TSUS, but not necessarily classifiable thereunder.

The filler plug, inspection plug, level plug, jackshaft assembly, rotor drive shaft housing assembly, and the stub axle housing assembly would be classifiable as parts of machinery for soil preparation and cultivation, in item 666.00, TSUS, and entitled to duty-free entry.

General interpretative rule 10(ij), TSUS, states that a provision for parts of an article covers a product solely or chiefly used as part of such article, but does not prevail over a specific provision for such part. There are specific provisions for screws, locknuts, gaskets, and washers.

Item 870.45 of the tariff schedules provides for parts to be used in articles provided for in item 666.00, whether or not such parts are chiefly used as parts of such articles and whether or not covered by a specific provision within the meaning of general interpretative rule 10(ij), and entitled to duty-free entry. However, headnote 2(ii) to schedule 8, part 7, provides that item 870.45, TSUS, does not apply to articles provided for in schedule 6, part 3 (subparts A through F) with certain exceptions.

The gaskets are parts to be used in the rotavator which is provided for in item 666.00, TSUS. Inasmuch as the gaskets are classifiable under item 773.25, TSUS, which is not excepted by schedule 8, part 7, headnote 2(ii), they would be classifiable under the provisions of item 870.45, TSUS, and entitled to duty-free entry provided they are actually used as parts of the rotavator and you comply with the applicable Customs Regulations (secs. 10.131 through 10.139, copy enclosed).

Inasmuch as the setscrews, locknuts, and spring washers are provided for in schedule 6, part 3D, they are excluded from item 870.45, TSUS, and are classifiable as follows:

(a) Setscrew M16x 100 Hex. G8.8, and the setscrew M10x 25 Hex. G8.8 are classifiable as screws having shanks or threads over 0.24 inch in diameter, in item 646.63, TSUS, and dutiable under item 923.53, TSUS, at the modified rate of 15 percent ad valorem.

(b) Locknut M16 and nut M10 Hex. G8 are classifiable under the provision for nuts of iron or steel, in item 646.56, TSUS, and dutiable under item 923.52, TSUS, at the modified rate of 0.1 cent per pound plus 15 percent ad valorem.

(c) Spring washer is classifiable under the provision for spiral and other lock washers, in item 646.65, TSUS, and dutiable at the rate of 9.5 percent ad valorem.

(C.S.D. 80-199)

Country-of-Origin Marking: Assessment of Additional Marking Duties Notwithstanding Redelivery Demand Not Timely Made

Date: January 30, 1980
File: MAR-1-01-RRUEE
711890 HS

This ruling clarifies section 141.113(a), Customs Regulations.

Issue.—If Customs does not demand redelivery within the time period specified within section 141.113(a), Customs Regulations, may the 10 percent additional marking duties still be assessed on goods that do not meet country-of-origin marking requirements?

Facts.—Section 141.113(a), Customs Regulations, provides that demand for redelivery for the purpose of marking or labeling of merchandise that is not legally marked shall be made not later than 30 days after either the date of entry, in the case of merchandise examined in public stores and places or arrival, or the date of examination, in the case of merchandise examined at the importer's premises. Clarification is requested as to whether additional marking duties may be assessed on goods that do not meet country-of-origin marking requirements if the demand for redelivery is not made within the time period specified within section 141.113(a).

Law and analysis.—Section 304 of the Tariff Act of 1930, as amended (19 U.S.C. 1304), provides that every imported article shall be marked to indicate to an ultimate purchaser in the United States the English name of the country of origin of the article.

The District Director may demand redelivery to Customs custody of any article (or its container) previously released which is found to be not marked legally with its country of origin for the purpose of requiring the article (or its container) to be properly marked. Section 141.113(a), Customs Regulations, provides that demand for the redelivery to Customs custody for the purpose of requiring articles to be marked legally shall be made not later than 30 days after either the date of entry, in the case of merchandise examined in public stores and places of arrival, or the date of examination, in the case of

merchandise examined at the importer's premises. If demand for redelivery is not made within this specified 30-day period, liquidated damages may not be assessed for failure to redeliver the goods.

Section 134.2, Customs Regulations, provides that articles not marked as required shall be subject to additional duties of 10 percent of their final appraised value unless they are exported or destroyed under Customs supervision prior to liquidation of the entry, as provided in section 304(c) of the Tariff Act of 1930, as amended (19 U.S.C. 1304). There is no time limit beyond when the 10-percent additional marking duties can no longer be assessed. While demand for redelivery must be timely made for purposes of assessing liquidated damages under the redelivery bond, there is no requirement that demand for redelivery even be made for Customs to assess the 10-percent additional marking duties upon liquidation of an entry. In *A. N. Deringer, Inc.* v. *United States* (C.D. 2408), the U.S. Customs Court held that demanding redelivery is not a prerequisite to the imposition of marking duties. Demand of redelivery, the court said, is merely an administrative procedure to assist importers to meet the statutory conditions basic to avoidance of marking duties.

Holding.—If Customs does not demand redelivery of articles that are not properly marked within the time period specified within section 141.113(a), Customs Regulations, the 10-percent additional marking duties described in section 134.2, Customs Regulations, may still be assessed on the articles if they do not meet country-of-origin marking requirements. Liquidated damages for failure to redeliver would be precluded, though, if demand for redelivery is not timely made in accordance with section 141.113(a).

(C.S.D. 80–200)

Classification: Candy in the Shape of Baseballs and Plastic Miniature Bat Filled With Powdered Candy

Date: February 4, 1980
File: CLA-2: RRUCGC
062560 c

To: Area Director of Customs, New York, N.Y.
From: Director, Classification and Value Division.
Subject: Reconsideration of decision reached in internal advice request No. 167/78 relating to the tariff classification of a package of five candy baseballs and a plastic minature bat manufactured in Hong Kong.

This request for reconsideration was initiated by the law firm of (name) in a letter dated July 17, 1979.

Facts.—The merchandise involved consists of five pieces of candy in the shpe of baseballs approximately ¾ inch in diameter and a plastic miniature bat approximately 4¾ inches in length filled with powdered candy, all of which are enclosed in a cellophane bag labeled "Candy Baseballs with Bat."

As stated in the original decision there is no dispute as to the classification of the candy balls. They are classifiable under the provision for candy and other confectionery, not specially provided for, in item 157.10, Tariff Schedules of the United States (TSUS).

Our original decision holding that the bat and candy contained therein is classifiable as an entirety under item 737.95, TSUS, was based on the perception that the merchandise before us is identical in nature and use to that before the court in the case of *The Spesco Corporation* v. *United States*, 62 Cust. Ct. 297, C.D. 3749 (1969).

The inquirer maintains that the entire importation is classifiable as candy under item 157.10, TSUS, because it consists of candy in its usual containers and should be classified as claimed by virtue of general headnote 6(b)(i), TSUS.

Alternatively, the inquirer claims that if the merchandise is considered to be candy in an unusual container, that all the candy should be classified as claimed, and the plastic baseball bat under the provision for other articles not specially provided for, of plastics in item 774.60, TSUS.

Issue.—Is the merchandise involved governed by the decision in the *Spesco* case, supra?

Law and analysis.—In the *Spesco* case, supra, the court held that candy-filled tool replicas comprised the actual merchandise being imported and that the tool replicas were not containers within the meaning of general headnote 6(b), TSUS. The tool replicas had significant uses as playthings for children quite apart from their original contents, and were classified as toys in item 737.90, currently 737.95, TSUS.

It is our view that the instant merchandise is not governed by the *Spesco* case supra, for the following reasons:

(1) It appears that the nature and predominant feature of the baseball bats filled with candy is the candy noting that the container is worthless without the candy.

(2) An examination of the sample bats filled with powdered candy leads up to the conclusion that this merchandise would be immediately discarded after the powdered candy is consumed. Any use as a toy by children would in our opinion be a fugitive use.

General Headnote 6(b)(i), TSUS, relating to the tariff treatment of containers not imported empty provides that:

> The usual or ordinary types of shipping or transportation containers or holders, if not designed for, or capable of, reuse, and containers of usual types ordinarily sold at retail with their contents, are not subject to treatment as imported articles. Their cost, however, is under section 402 or 402a of the Tariff Act, a part of the value of their contents and if their contents are subject to an ad valorem rate of duty such containers or holders are, in effect, dutiable at the same rate as their contents.

It is our position that the plastic baseball bat is a usual container whose tariff treatment is governed by general headnote 6(b)(i), TSUS.

Holding.—The powdered candy is classifiable under the provision for candy and other confectionary in item 157.10, TSUS, and dutiable at the rate of 7 percent ad valorem.

The plastic miniature baseball bat is not subject to treatment as an imported article. However, pursuant to general headnote 6(b)(i), TSUS, it is in effect dutiable at the same rate as the powdered candy.

You should inform the inquirer of this ruling.

Decisions of the United States Customs Court

United States Customs Court

One Federal Plaza
New York, N.Y. 10007

Chief Judge

Edward D. Re

Judges

Paul P. Rao
Morgan Ford
Scovel Richardson
Frederick Landis
James L. Watson
Herbert N. Maletz
Bernard Newman
Nils A. Boe

Senior Judge

Samuel M. Rosenstein

Clerk

Joseph E. Lombardi

Customs Rules Decision

(C.R.D. 80–8)

INDUSTRIAL FASTENERS GROUP, AMERICAN IMPORTERS ASSOCIATION, PLAINTIFF *v.* THE UNITED STATES, HON. PHILIP M. KLUTZNICK, SECRETARY OF COMMERCE; HON. ROBERT E. HERZSTEIN, UNDER SECRETARY OF COMMERCE FOR INTERNATIONAL TRADE; HON. ROBERT E. CHASEN, COMMISSIONER OF CUSTOMS WASHINGTON, D.C., DEFENDANTS

Memorandum on Plaintiff's Motions for a Temporary Restraining Order and Preliminary Injunction: Countervailing Duties on Industrial Fasteners From India

Court No. 80-7-01157

(Dated August 20, 1980)

Barnes, Richardson & Colburn, Esqs. (*Andrew P. Vance*, Esq., of counsel), for the plaintiff.

Alice Daniel, Assistant Attorney General, *Joseph I. Liebman*, Attorney in Charge, Field Office for Customs Litigation, and *John J. Mahon*, trial attorney, Esqs., for the defendant.

NEWMAN, Judge: In a matter of novel impression, this court has issued for the first time a temporary restraining order (TRO) and preliminary injunction. These extraordinary remedies are now available by reason of significant changes made by the Trade Agreements Act of 1979 (Public Law 96-39, 93 Stat. 144, enacted July 26, 1979) in procedures for judicial review of administrative determinations in countervailing and antidumping cases. The main purpose of this memorandum is to call these injunctive orders of first impression and but one aspect of the expanded jurisdiction of the court to the attention of the international trade community.

Briefly, the facts and circumstances surrounding the issuance of the TRO and injunction are: In this action, plaintiff seeks review of the final countervailing duty determination and order of the International Trade Administration, U.S. Department of Commerce, respecting certain industrial fasteners from India, published in the Federal Register on July 21, 1980 (45 F.R. 48607 et seq.). On April 30, 1980, pursuant to a preliminary countervailing duty determination (45 F.R. 28786 et seq.), the liquidations of certain entries of industrial fasteners from India were suspended. Following the final countervailing duty determination and order contested in this action, Customs issued orders on (or before) July 25, 1980, to commence liquidation of all entries which had been suspended on or after April 30, 1980, in accordance with the preliminary countervailing duty determination.

In this context, plaintiff was faced with a critical problem—indeed, an emergency situation—on the eve of the impending liquidations ordered by Customs. It is questionable whether, apart from obtaining a judicial review of the Commerce Department's underlying final countervailing duty determination, importers would be entitled to file administrative protests against individual liquidations by Customs, and to contest any denied protests in this court. However, section 516A(c)(2) of the Tariff Act of 1930, as added by Public Law 96-39, 1979, supra, provides that the Customs Court may enjoin the liquidation of entries of merchandise covered by a determination of the administering authority (the International Trade Administration) upon a request by an interested party for such relief and upon a

proper showing that the requested relief should be granted under the circumstances. Additionally, rule 19.1(b) of the Rules of the Customs Court provides for the issuance of a TRO under certain conditions.

In the present case, plaintiff has filed a summons, a verified complaint, and applications for a TRO and an injunction. In connection with plaintiff's applications, conferences were called by the court on July 28, 1980, and August 5, 1980; and a hearing was directed for August 7, 1980, at which oral argument was presented. Andrew P. Vance, Esq. represented the plaintiff association and Joseph I. Liebman, Attorney in Charge, Field Office for Customs Litigation, and John J. Mahon, trial attorney, Esqs. appeared on behalf of defendant. Also present at the first conference was Daniel A. Pinkus, Assistant Chief Counsel for Customs Court Litigation, U.S. Customs Service. Counsel for plaintiff adequately demonstrated that if protests against individual liquidations are not possible, enjoining liquidation of the entries was required to maintain the status quo and preserve the importers' right to judicial review, since without an injunction many entries would be liquidated prior to the time the courts could enter a final decision on the merits of the dispute. Any such liquidations would preclude plaintiff from obtaining the full benefit of a favorable ruling on Commerce's final countervailing duty determination. Under the circumstances herein, the relief requested by plaintiff is appropriate; and furthermore, defendants have stated in open court that they do not object to the proposed order granting an injunction. Hence, this memorandum includes the TRO that was entered on July 28, 1980 (effective until Aug. 7, 1980), and a subsequent order granting an injunction entered on August 7, 1980 (effective during the pendency of this litigation in the Customs Court and its appellate tribunals).

This court emphasized at the hearing that it had no intention to impinge upon the jurisdiction of the Court of Customs and Patent Appeals. But plainly—and counsel for plaintiff conceded—if plaintiff were successful on the merits, and most certainly if plaintiff were not successful on the merits, plaintiff faced a perilous interval in the period after judgment rendered by the Customs Court and the taking of an appeal to the appellate tribunal and that court's action relative to a stay.

Parenthetically, Peter Buckfeller, Esq., attorney for the petitioner before the Department of Commerce (who has not yet intervened in this case as an interested party) was orally notified by this court of plaintiff's applications and of the hearing on August 7, 1980.

INDUSTRIAL FASTENERS GROUP, AMERICAN IMPORTERS ASSOCIATION, PLAINTIFF *v.* THE UNITED STATES, ET AL., DEFENDANTS

Court No. 80-7-01157

Temporary Restraining Order

(Dated July 28, 1980)

Upon reading and filing plaintiff's application for temporary restraining order, the affidavit of counsel in support of issuance of the temporary restraining order, the verified complaint and motion for preliminary injunction and memorandum in support thereof, and upon all other papers and proceedings had herein, including a hearing attended by counsel for the named parties, it clearly appearing—

(1) That immediate and irreparable injury, loss, or damage may result to the applicant before all possible interested parties or their attorney(s) can be heard in opposition to this application;

(2) That the injury suffered by the assessment of countervailing duties in accordance with a final countervailing duty determination and order (July 21, 1980, 45 F.R. 48607), in an amount equal to 18 percent of the f.o.b. for each particular entry, on all entries suspended pursuant to a preliminary countervailing duty determination (Apr. 30, 1980, 45 F.R. 28786) on industrial fasteners from India may be irreparable because such countervailing duty assessment may not be susceptible to administrative protest and would be irrecoverable even if the determination by the International Trade Administration, Department of Commerce is held to be invalid by this court;

(3) That orders to liquidate suspended entries were issued by Friday, July 25, 1980, allowing liquidations of the entries in question to begin immediately, potentially causing the aforementioned irreparable harm;

(4) That importers, including members of the plaintiff trade association, may have no means of contesting the legitimacy of the countervailing duty assessments upon the liquidation of the subject entries; and

(5) That restraint of such liquidations will preserve the status quo until there is an opportunity to hold a hearing on the application for a preliminary injunction concurrently filed, and that such restraint will cause no harm to adverse parties, it is hereby

ORDERED that the defendants herein, together with their delegates and all other officers, agents, servants, and employees of the U.S. Customs Service shall be and they hereby are restrained from the liquidation of any and all entries or withdrawals from warehouse for consumption of certain industrial fasteners from India, which are

subject to the final countervailing duty determination and countervailing duty order issued by the Commerce Department and published in the Federal Register on July 21, 1980 (45 F.R. 48607), until August 7, 1980, at time of hearing before the court; and it is

FURTHER ORDERED that defendants respond to plaintiff's motion for preliminary injunction by personal service on plaintiff's counsel on or before August 6, 1980 at 12 noon, and it is

FURTHER ORDERED that plaintiff's motion for preliminary injunction is set down for hearing before this court at 10 a.m. on August 7, 1980, and it is

FURTHER ORDERED that this order shall expire 10 days from the date of entry of same unless extended for good cause shown.

INDUSTRIAL FASTENERS GROUP, AMERICAN IMPORTERS ASSOCIATION, PLAINTIFF, *v.* THE UNITED STATES, ET AL., DEFENDANTS

Court No. 80-7-01157

Order

(Dated August 7, 1980)

Upon reading and filing plaintiff's motion for preliminary injunction, its memorandum of points and authorities in support of motion for preliminary injunction, and the verified complaint; and upon defendants' oral representation to this court that they do not object to an order enjoining the liquidation of entries of certain industrial fasteners from India, covered by the countervailing duty determination and countervailing duty order published by the Department of Commerce on July 21, 1980 (45 F.R. 48607), during the pendency of this litigation; and it appearing to the court that preliminary injunctive relief is appropriate under the circumstances of this case;

And after hearing oral argument by Andrew P. Vance, Esq., on behalf of plaintiff, and by John J. Mahon, Esq., on behalf of defendants, it is hereby

ORDERED that the defendants herein, together with their delegates and all other officers, agents, servants, and employees of the U.S. Customs Service shall be and they hereby are enjoined during the pendency of this litigation from the liquidation of any and all entries or withdrawals from warehouse for consumption of certain industrial fasteners from India, which are subject to the final countervailing duty determination and countervailing duty order issued by the Commerce Department and published in the Federal Register on July 21, 1980 (45 F.R. 48607).

Decisions of the United States Customs Court

Abstracts

Abstracted Protest Decisions

DEPARTMENT OF THE TREASURY, *September 2, 1980.*

The following abstracts of decisions of the United States Customs Court at New York are published for the nformation and guidance of officers of the customs and others concerned. Although the decisions are not of sufficient general interest to print in full, the summary herein given will be of assistance to customs officials in easily locating cases and tracing important facts.

ROBERT E. CHASEN,
Commissioner of Customs.

DECISION NUMBER	JUDGE & DATE OF DECISION	PLAINTIFF	COURT NO.	ASSESSED	HELD	BASIS	PORT OF ENTRY AND MERCHANDISE
				Par. or Item No. and Rate	Par. or Item No. and Rate		
P80/122	Ford, J. August 19, 1980	Border Brokerage Co., Inc.	79-6-00992	Item 680.22 11%	Item 680.27 5%	Judgment on the pleadings	Blaine (Seattle) Uniflow valves
P80/123	Watson, J. August 19, 1980	Sunshine Cover and Tarp Inc.	80-5-00836	Item 389.62 25¢ per lb. + 15%	Item 735.20 10%	The Newman Importing Co., Inc. v. U.S. (C.D. 4648)	Los Angeles Nylon tents, size 7′ x 7′

P80/124	Maletz, J. August 19, 1980	Granada Electronics, Inc.	79-10-01555	Item 735.20 10%	Item 734.20 Free of duty under GSP by virtue of Ex. Order No. 11888 of 11/24/75	APF Elect onics, Inc. v. U.S. (C.D. 4784)	New York T.V. game machines; product of eligible beneficiary country
P80/125	Newman, J. August 19, 1980	The Copeland Co., Inc., a/c Goyoung International, Inc.	79-4-00585	Item 734.77 7.5%	Item 734.77 Free of duty under GSP by virtue of Ex. Order No. 11888 of 11/24/75	Agreed statement of facts	Miami Golf gloves; product of eligible beneficiary country
P80/126	Newman, J. August 19, 1980	Tropical Customs Brokers, Inc., a/c Interbel Trading Co., Inc.	79-5-00787	Item 734.77 7.5%	Item 734.77 Free of duty under GSP by virtue of Ex. Order No. 11888 of 11/24/75	Agreed statement of facts	Miami Golf gloves; product of eligible beneficiary country
P80/127	Maletz, J. August 25, 1980	John V. Carr & Son, Inc.; Paccar Inc., d/b/a Dynacraft Company	78-3-00390	Item 772.65 4%	Item 772.66 Free of duty	John V. Carr & Son, Inc., et al. v. U.S. (C.D. 4652)	Port Huron (Detroit) Hose of rubber or plastics; Canadian articles and original motor vehicle equipment

DECISION NUMBER	JUDGE & DATE OF DECISION	PLAINTIFF	COURT NO.	ASSESSED	HELD	BASIS	PORT OF ENTRY AND MERCHANDISE
				Par. or Item No. and Rate	Par. or Item No. and Rate		
P80/128	Richardson, J.	Fairchild Semiconductor, A Division of Fairchild Camera and Instrument Corporation	73-4-00892	Item 687.60 10%, 8.5% or 7% on full value of imported merchandise Items 687.60/807.00 10%, 8.5% or 7% on full value of imported merchandise, less cost or value of U.S. products	Items 687.60/807.00 Cost or value of U.S. products deductible from value of imported merchandise; correct amount of duty as to each entry shown on exhibit 2 attached to decision and judgment as "Revised Duty"	U.S. v Texas Instruments Incorporated (C.A.D. 1178) General Instrument Corporation v. U.S. (C.A.D. 1062)	San Francisco American goods returned; semiconductors, transistors and/or integrated circuits containing U.S. fabricated components (silicon dice and gold wire)

Decisions of the United States Customs Court

Abstracts

Abstracted Reappraisement Decisions

DECISION NUMBER	JUDGE & DATE OF DECISION	PLAINTIFF	COURT NO.	BASIS OF VALUATION	HELD VALUE	BASIS	PORT OF ENTRY AND MERCHANDISE
R80/261	Watson, J. August 19, 1980	Toby Tex Inc.	80-1-00067	American selling price	$2.50 per pair net packed	Converse Rubber Company v. U.S. (R.D. 11716)	New York Footwear
R80/262	Newman, J. August 19, 1980	Brother International Corp.	R65/24882, etc.	Export value	Appraised unit values less 7.5%, net packed	Agreed statement of facts	Longview (Portland, Oreg.) Sewing machine and console
R80/263	Newman, J. August 19, 1980	Mitsui & Co. (USA), Inc.	78-4-00617	Cost of production	Invoice unit prices, less any included freight and insurance, in amounts shown on entry papers, net, packed	Judgment on the pleadings	Los Angeles Lathes
R80/264	Newman, J. August 19, 1980	J. C. Penney	R64/10452, etc.	Export value	Appraised unit values less 7.5%, net packed	Agreed statement of facts	Philadelphia Tubing mats

DECISION NUMBER	JUDGE & DATE OF DECISION	PLAINTIFF	COURT NO.	BASIS OF VALUATION	HELD VALUE	BASIS	PORT OF ENTRY AND MERCHANDISE
R80/265	Newman, J. August 19, 1980	J. C. Penney	R64/12293, etc.	Export value	F.o.b. unit invoice prices plus 20% of difference between f.o.b. unit invoice prices and appraised values	Agreed statement of facts	Philadelphia Tubing mats
R80/266	Newman, J. August 19, 1980	J. C. Penney	R64/13428, etc.	Export value	F.o.b. unit invoice prices plus 20% of difference between f.o.b. unit invoice prices and appraised values	Agreed statement of facts	Portland, Oreg. Tubing mats
R80/267	Newman, J. August 19, 1980	J. C. Penney	R64/14154, etc.	Export value	Appraised unit values less 7.5%, net packed	Agreed statement of facts	New Orleans Tubing mats
R80/268	Re, C. J. August 25, 1980	Amerex Trading Corp.	73-7-01858	Export value	Appraised values shown on entry papers less additions included in appraised values to reflect currency revaluation	C.B.S. Imports Corp. v. U.S. (C.D. 4739)	Charleston, S.C. Merchandise covered by involved entries
R80/269	Re, C. J. August 25, 1980	Korvettes, Division of Arlen Realty & Development Corp.	73-5-01316	Export value	Appraised values shown on entry papers less additions included in appraised values to reflect currency revaluation	C.B.S. Imports Corp. v. U.S. (C.D. 4739)	New York Merchandise covered by involved entries
R80/270	Ford, J. August 25, 1980	B & K Instruments, Inc.	R65/25195, etc.	Export value	Invoice unit prices less, where applicable, the items specified on invoices as saved packing	Agreed statement of facts	Cleveland Items specified on schedule A, attached to decision and judgment

R80/271	Richardson, J. August 25, 1980	Polaroid Corporation	77-2-00212, etc.	Cost of production	$1.423 per roll	Agreed statement of facts	Boston; New York T20C Photographic roll film for Polaroid cameras
R80/272	Re, C.J. August 26, 1980	Adorence Co., Inc.	73-12-03479	Export value	Appraised values shown on entry papers less additions included in appraised values to reflect currency revaluation	C.B.S. Imports Corp. v. U.S. (C.D. 4739)	New York Merchandise covered by involved entries
R80/273	Re, C.J. August 26, 1980	Adorence Co., Inc.	77-3-00513, etc.	Export value	Appraised values shown on entry papers less additions included in appraised values to reflect currency revaluation	C.B.S. Imports Corp. v. U.S. (C.D. 4739)	New York Merchandise covered by involved entries
R80/274	Re, C.J. August 26, 1980	Adorence Co., Inc.	78-2-00351, etc.	Export value	Appraised values shown on entry papers less additions included in appraised values to reflect currency revaluation	C.B.S. Imports Corp. v. U.S. (C.D. 4739)	New York Merchandise covered by involved entries
R80/275	Re, C.J. August 26, 1980	Korvettes Division of Arlen Realty & Development Corp.	73-4-01065, etc.	Export value	Appraised values shown on entry papers less additions included in appraised values to reflect currency revaluation	C.B.S. Imports Corp. v. U.S. (C.D. 4739)	New York Merchandise covered by involved entries

Recent Unpublished Customs Service Decisions

The following listing of recent administrative decisions issued by the Office of Regulations and Rulings, U.S. Customs Service, and not otherwise published, is published for the information of Customs officers and the importing community. Although the decisions are not of sufficient general interest to warrant publication as Treasury decisions, the listing describes the issues involved and is intended to aid Customs officers and concerned members of the public in identifying matters of interest which recently have been considered by the Office of Regulations and Rulings.

A copy of any decision included in this listing, identified by its date and file number, may be obtained in a form appropriate for public distribution upon written request to the Office of Regulations and Rulings, attention: Legal Reference area, room 2404, U.S. Customs Service, 1301 Constitution Avenue NW., Washington, D.C. 20229. These copies will be made available at a cost to the requester of 10 cents per page. However, the Customs Service will waive this charge if the total number of pages copied is 10 or less.

Decisions listed in earlier issues of the CUSTOMS BULLETIN, through July 2, 1980, are available in microfiche format at a cost of $23.85 (15 cents per sheet of fiche). It is anticipated that additions to the microfiche will be made quarterly and subscriptions are available. Requests for the microfiche now available and for subscriptions should be directed to the Legal Reference Area. Subscribers will automatically receive updates as they are issued and will be billed accordingly.

Dated: September 8, 1980.

JOHN T. ROTH,
Acting Director,
Regulations and Research Division.

Date of decision	File No.	Issue
8-29-80	104756	Instruments of international traffic: Stainless steel containers used to transport nickel powder
8-22-80	104766	Instruments of international traffic: Plastic bobbins and steel beams used to transport yarn and rovings
8-29-80	104796	Vessels: Whether floats for pipelines are vessels for purposes of the Jones Act
8-13-80	104805	Carrier control: Whether merchandise manifested for a U.S. port may be diverted foreign after vessel's departure for foreign
8-11-80	104806	Carrier control: Whether a cable survey device may be carried between coastwise points by a non-coastwise-qualified vessel
8-27-80	104822	Carrier control: Whether a vessel which is proceeding between coastwise ports via a foreign port may use the incomplete cargo declaration procedure of either section 4.75 or section 4.84, Customs Regulations
8-26-80	104832	Vessels: Whether a foreign fishing vessel arrives in distress within the meaning of section 4.96(g), Customs Regulations, if the refrigeration system for the fish is malfunctioning
7-28-80	713031	Entry: Use of immediate delivery procedure at Mexico border ports of entry under Public Law 95-410
7-30-80	060905	Classification: Cheese (117.75, 117.88)
5-21-80	061199	American selling price: Vinyl boots (700.60)
8-11-80	062523	Classification: Model airplane engine mount (737.95)
6-25-80	062906	Classification: Laminated strips of manmade fiber (309.20, 309.21, 309.25)
7-24-80	062990	Classification: Cheese (117.88)
7-24-80	064271	Classification: Steel products (607.66, 607.94, 609.80, 609.84, 657.25)
7-11-80	064458	Classification: Fur plates (124.20, 124.60)
8-11-80	064570	Classification: Bead frame (710.60)
7-11-80	064666	Classification: Vest made from pieced fabrics (380.84)
8-11-80	064702	Classification: Lead foil (644.42)
7-30-80	064806	Classification: Screening material (338.30, 355.81, 355.82)
8-11-80	064828	Classification: Skinless frankfurters (107.25)
7-11-80	064906	American selling price: Shoe with cotton upper and rubber or plastic sole (700.60)
7-30-80	064915	Classification: Whether a label with stylized lettering on jeans constitutes ornamentation (382.00)
7-30-80	064929	Classification: Artificial sweetener (413.30)
7-24-80	065049	Classification: Whether triple stitching on the seams of a cotton work shirt ornaments the garment
7-11-80	065052	Classification: Halloween headwear (703.72, 737.95, 772.30)
7-24-80	065157	Classification: Dress with lace top (382.02)
7-24-80	065237	Classification: Laboratory analysis of samples
7-24-80	065245	Classification: Whether X-stitching is ornamental on garment

Date of decision	File No.	Issue
8-20-80	066070	Classification: Meat cones (107.62)
7-24-80	066076	Classification: Steel wire chimney brushes (750.70)
8- 7-80	066080	Classification: Tin canisters used to transport bottles of wine; usual shipping or transportation containers; general headnote 6(b)(i), TSUS
7-30-80	066108	Classification: Wool underwear with lace edging (378.05)
6-27-80	066113	Classification: Radio-controlled model cars; hand-held transmitters (685.60, 737.15)
8- 1-80	066126	Classification: Cocoa-flavored powdered drink mix (183.00, 183.05, 950.23)
8-11-80	066172	Classification: Waterless toilet (653.96)

Judgment of the U.S. Customs Court in Appealed Case

AUGUST 20, 1980

APPEAL 80-2.—United States *v.* RMS Electronics, Inc.—BALUNS, IMPEDANCE MATCHING COUPLERS, OR MATCHING TRANSFORMERS—TRANSFORMERS—TELEVISION APPARATUS AND PARTS—OTHER TRANSFORMERS—TSUS.—C.D. 4818 affirmed June 26, 1980 (C.A.D. 1249).

International Trade Commission Notices

Investigations by the U.S. International Trade Commission

DEPARTMENT OF THE TREASURY

The appended notices relating to investigations by the U.S. International Trade Commission are published for the information of Customs Officers and others concerned.

R. E. CHASEN,
Commissioner of Customs.

731–TA–29 (Preliminary)

ASPHALT ROOFING SHINGLES FROM CANADA

Notice of Institution of Preliminary Antidumping Investigation and Scheduling of Conference

AGENCY: U.S. International Trade Commission.

ACTION: Institution of preliminary antidumping investigation to determine whether there is a reasonable indication that an industry in the United States in materially injured, or is threatened with material injury, or the establishment of an industry is materially retarded, by reason of imports from Canada of certain asphalt roofing shingles, provided for in items 256.90 and 523.91 of the Tariff Schedules of the United States (TSUS), allegedly sold or likely to be sold at less than fair value.

EFFECTIVE DATE: August 21, 1980.

FOR FURTHER INFORMATION CONTACT: Vera Libeau, Senior Investigator; 202–523–0368.

SUPPLEMENTARY INFORMATION:

BACKGROUND

This investigation is being instituted following receipt of a petition on August 21, 1980, filed by the Asphalt Roofing Manufacturers

Association, on behalf of domestic producers of asphalt roofing shingles. The petition requested the imposition of additional duties in an amount equal to the amount by which the foreign market value exceeds the U.S. price of asphalt roofing shingles imported from Canada.

Authority.—Section 733(a) of the Tariff Act of 1930 (19 U.S.C. 1673b(a)) requires the Commission to make a determination of whether there is a reasonable indication that an industry in the United States is materially injured, or is threatened with material injury, or the establishment of an industry in the United States is materially retarded, by reason of imports alleged to be, or likely to be, sold in the United States at less than fair value. Such a determination must be made within 45 days after the date on which a petition is filed under section 732(b) or on which notice is received from the Department of Commerce of an investigation commenced under section 732(a). Accordingly, the Commission, on August 29, 1980, instituted preliminary antidumping investigation No. 731-TA-29. This investigation will be subject to the provisions of part 207 of the Commission's Rules of Practice and Procedure (19 CFR 207, 44 F.R. 76457) and particularly, subpart B thereof.

Written submissions.—Any person may submit to the Commission on or before September 19, 1980, a written statement of information pertinent to the subject matter of this investigation. A signed original and 19 copies of such statements must be submitted.

Any business information which a submitter desires the Commission to treat as confidential shall be submitted separately and each sheet must be clearly marked at the top "Confidential business data." Confidential submissions must conform with the requirements of section 201.6 of the Commission's Rules of Practice and Procedure (19 CFR 201.6). All written submissions, except for confidential business data, will be available for public inspection.

Conference.—The Director of Operations of the Commission has scheduled a conference in connection with this investigation for 10 a.m., e.d.t., on September 15, 1980, at the U.S. International Trade Commission Building, 701 E Street NW., Washington, D.C. Parties wishing to participate in the conference should contact the senior investigator for the investigation, Ms. Vera Libeau; 202-523-0368. It is anticipated that parties in support of the petition for antidumping duties and parties opposed to such petition will each be collectively allocated 1 hour within which to make an oral presentation at the conference. Further details concerning the conduct of the conference will be provided by the senior investigator.

Inspection of petition.—The petition filed in this case is available for public inspection at the Office of the Secretary, U.S. International

Trade Commission and at the New York City Office of the U.S. International Trade Commission located at 6 World Trade Center.

By order of the Commission:

Issued: August 29, 1980.

KENNETH R. MASON,
Secretary.

Index

U.S. Customs Service

Treasury decisions:

	T.D. No.
Drawback contracts, general	80-227
Manmade fiber textile products—restrictions on entry	80-228
Customs Regulations amended	80-229
Carriers bond	80-230
Daily rates for countries not on quarterly list	80-231

Customs Service decisions:

	C.S.D. No.
Bonds: Movement by private carrier of its own goods	80-189
Brokers: Statutory requirement for corporate customhouse broker's license	80-185
Carrier control: Transportation of panel truck and equipment between U.S. ports	80-186
Classification:	
Candy in the shape of baseballs and plastic miniature bat filled with powdered candy	80-200
Fruit products	80-176
Grass skis	80-192
Parts of a rotary tilling device	80-198
Constructed value:	
Addition for profit where no profit is realized	80-193
Dutiability of payments for use in the United States of patented process	80-191
Country-of-origin marking:	
Assessment of additional marking duties notwithstanding redelivery demand not timely made	80-199
Exception from marking for article with properly marked containers	80-182
Use of abbreviation and name of city	80-179
Drawback:	
Landing certificate as proof of exportation	80-180
Manufacture or production for drawback purpose	80-183
Testing of one machine as evidence that similar machine fails to meet specifications	80-187
Entry: Transfer of liability for duties prior to completion of entry process	80-190
Generalized system of preference: Merchandise "imported directly" from BDC	80-188
Instruments of international traffic: Fiberboard containers	80-177
Prohibited and restricted importations: Trademark infringement involving marks similarly spelled and pronounced	80-178
Special appraisement: Allocation of costs for wearing apparel imported under item 807.00 TSUS	80-181

Vessel repairs: C.S.D. No.
Application for relief from payment of vessel repair duties 80–196
Dutiability of warranty work, inspections and surveys 80–195
Nondutiability of lubricant and refrigerant as consumable supplies 80–197
Vessel stores, supplies and equipment: Definition of and distinction between terms for duty purposes 80–184
Vessels: Landing and modification of fish nets which are the equipment of foreign-flag fishing vessels 80–194

Customs Court

Administrative agency's findings; stay of proceedings, C.R.D. 80–8
Construction:
Rules of U.S. Customs Court, rule 19.1(b), C.R.D. 80–8
Tariff Act of 1930, as amended, sec. 516A(c)(2), C.R.D. 80–8
Trade Agreements Act of 1979, C.R.D. 80–8
Countervailing duties:
Industrial fasteners from India, C.R.D. 80–8
Motion for temporary restraining order and preliminary injunction, C.R.D. 80–8
Industrial fasteners from India; countervailing duties, C.R.D. 80–8
International Trade Administration; review of final countervailing duty determination, C.R.D. 80–8
Irreparable, immediate injury; preliminary injunction, C.R.D. 80–8
Judgment in appealed case (p. —); Appeal 80–2—Baluns, impedance matching couplers, or matching transformers; transformers; television apparatus and parts; other transformers; TSUS
Judicial review of administrative determination; Trade Agreements Act of 1979, C.R.D. 80–8
Motion for temporary restraining order and preliminary injunction; countervailing duties, C.R.D. 80–8
Preliminary injunction; irreparable, immediate injury, C.R.D. 80–8
Preservation of status quo; restrained from the liquidation of entries, C.R.D. 80–8
Restrained from the liquidation of entries; preservation of status quo, C.R.D. 80–8
Review of final countervailing duty determination; International Trade Administration, C.R.D. 80–8
Stay of proceedings; administrative agency's findings, C.R.D. 80–8
Trade Agreements Act of 1979; judicial review of administrative determination, C.R.D. 80–8

328-755
378
Item 950-D
T 1.1/3:14/40

Customs Bulletin

Regulations, Rulings, Decisions, and Notices concerning Customs and related matters

and Decisions

of the United States Court of Customs and Patent Appeals and the United States Customs Court

9247

Vol. 14 | OCTOBER 1, 1980 | No. 40

This issue contains

T.D. 80-232
General Notices
ITC Investigations No. 337-TA-52; No. 79-25/31
C.R.D. 80-9
Protest abstracts P80/129
Reap. abstracts R80/276 and R80/277
International Trade Commission Notices

THE DEPARTMENT OF THE TREASURY
U.S. Customs Service

NOTICE

The abstracts, rulings, and notices which are issued weekly by the U.S. Customs Service are subject to correction for typographical or other printing errors. Users may notify the U.S. Customs Service, Logistics Management Division, Washington, D.C. 20229, of any such errors in order that corrections may be made before the bound volumes are published.

For sale by the Superintendent of Documents, U.S. Government Printing Office, Washington, D.C. 20402. Price: $2.25 (single copy domestic); $2.85 (single copy foreign). Subscription price: $85.00 a year domestic; $106.25 a year foreign.

U.S. Customs Service

Treasury Decision

(T.D. 80-232)

Foreign Currencies—Daily Rates for Countries Not on Quarterly List

Rates of exchange based on rates certified to the Secretary of the Treasury by the Federal Reserve Bank of New York for the Brazil cruzeiro, People's Republic of China yuan, Hong Kong dollar, Iran rial, Philippines peso, Singapore dollar, Thailand baht (tical), and Venezuela bolivar

The Federal Reserve Bank of New York, pursuant to section 522(c), Tariff Act of 1930, as amended (31 U.S.C. 372(c)), has certified buying rates for the dates and foreign currencies shown below. The rates of exchange, based on these buying rates, are published for the information and use of Customs officers and others concerned pursuant to part 159, subpart C, Customs Regulations (19 CFR 159, subpart C).

Brazil cruzeiro:	
September 1, 1980	Holiday
September 2–5, 1980	$0. 0179
People's Republic of China yuan:	
September 1, 1980	Holiday
September 2–5, 1980	$0. 678748
Hong Kong dollar:	
September 1, 1980	Holiday
September 2, 1980	$0. 202716
September 3, 1980	. 202511
September 4, 1980	. 202450
September 5, 1980	. 202388
Iran rial:	
	Not available
Philippines peso:	
September 1, 1980	Holiday
September 2–5, 1980	$0. 1320

Pages
missing

relate to fines, penalties, forfeitures, and liquidated damages for violations of customs and navigation laws. Under the act, section 592, Tariff Act of 1930 (19 U.S.C. 1592), relating to entry of merchandise by fraud or negligence, was amended.

New procedures were adopted for the imposition of a monetary penalty or, in limited circumstances, for the seizure of merchandise for a violation of 19 U.S.C. 1592 in a document published in the Federal Register on June 4, 1979, as T.D. 79-160 (44 F.R. 31950). Guidelines used by Customs for the mitigation of claims for monetary penalties assessed pursuant to 19 U.S.C. 1592 were recently approved by the Treasury Department. Notice advising the public that the guidelines were available upon request from Customs was published in the Federal Register on June 17, 1980, as T.D. 80-160 (45 F.R. 40975). The fact that the guidelines were available was also incorporated in the Customs Regulations.

Because of the widespread interest generated by the notice, Customs believes it is in the interest of the public to publish the guidelines. Further, in light of the consequences the guidelines could have on persons or organizations subject to their application, Customs believes it is in the interest of the efficient and effective administration of the Customs laws and regulations relating to fines, penalties, and forfeitures to solicit comments from the public on the guidelines. As presently drafted these guidelines are applicable to all fines, penalties, and forfeitures actions under section 592. Customs is trying to determine whether these guidelines should also be used in initially establishing a penalty and in determining the level of culpability.

SOLICITATION OF COMMENTS ON GUIDELINES FOR ESTABLISHMENT OR MITIGATION OF CLAIMS FOR MONETARY PENALTIES

Accordingly, Customs invites comments on the guidelines as they apply to the present mitigation process and in order to determine whether they should be modified so they can be utilized during the stage in the penalty process when a determination is being made to establish the penalty and determine the degree of culpability. The guidelines as recently approved by the Treasury Department are attached to this document as appendix A. These guidelines are presently being used in considering a petition to remit or mitigate penalties which have already been established.

Consideration will be given to any written comments, preferably in triplicate, that are submitted timely to the Commissioner of Customs. After Customs has reviewed and analyzed the comments, a recommendation may be made to the Treasury Department concerning appropriate changes or modifications to the guidelines. Comments submitted will be available for public inspection in accordance with

section 103.8(b), Customs Regulations (19 CFR 103.8(b)), during regular business hours at the Entry Procedures and Penalties Division, Headquarters, U.S. Customs Service, 1301 Constitution Avenue NW., room 2331, Washington, D.C. 20229.

DRAFTING INFORMATION

The principal author of this document was John E. Elkins, Regulations and Research Division, Office of Regulations and Rulings, U.S. Customs Service. However, personnel from other Customs offices participated in its development.

Dated: September 15, 1980.

R. E. CHASEN,
Commissioner of Customs.

[Published in the Federal Register, Sept. 22, 1980 (45 F.R. 62954)]

APPENDIX A

GUIDELINES FOR MITIGATION—19 U.S.C. 1592

A monetary penalty incurred under section 592, Tariff Act of 1930, as amended (19 U.S.C. 1592), hereinafter section 592, may be remitted or mitigated under 19 U.S.C. 1618 if it is determined (1) that the penalty was incurred without willful negligence or any intention by the petitioner to defraud the revenue or violate the law, or (2) there exist such mitigating circumstances as to justify remission or mitigation. No relief is authorized unless one of these two basic conditions of 19 U.S.C. 1618 is met. The guidelines below will be used by the U.S. Customs Service in arriving at a just and reasonable disposition of liabilities arising under section 592 within the stated limitations. These guidelines do not change or add to existing delegated authority and will be used within the framework of that authority.

(A) CLASSIFICATION OF VIOLATIONS

There are three classifications of violations of section 592. These are: (1) Fraud, (2) gross negligence, and (3) negligence. Fraud is a violation resulting from an act or acts (of commission or omission) which defraud the revenue or otherwise violate section 592, deliberately done with intent to defraud the revenue or otherwise violate the statute. Gross negligence is a violation resulting from an act or acts (of commission or omission) done with actual knowledge of or wanton disregard for the relevant facts and with indifference or disregard for the offender's obligations under the statute, done without demonstrable intent to defraud the revenue or violate the statute. Negligence is a

violation resulting from an act or acts (of commission or omission), done through the failure to exercise due care in ascertaining or recording the truth of the facts or with failure to use due care in ascertaining the offender's obligations under the statute, done without demonstrable intent to defraud the revenue or violate the statute.

(B) DISPOSITION OF CASES WHICH NORMALLY RESULT IN A LOSS OF DUTIES

(1) *Normal disposition.*—For cases involving negligence or gross negligence, normal disposition under 19 U.S.C. 1618 will result in no relief from the monetary penalties prescribed by section 592; i.e., for negligence, the lesser of the domestic value of the merchandise or two times the loss of duties; and for gross negligence, the lesser of the domestic value of the merchandise or four times the loss of duties. For cases involving fraud, normal disposition will result in a mitigated liability equal to the lesser of the domestic value of the merchandise or 8 times the loss of duties. For cases involving a prior disclosure, see chapter III, section 6.7 of the Fines, Penalties and Forfeitures Handbook.

(2) *Additional considerations.*—Additional relief beyond the normal disposition shall be provided in accordance with subparagraph (5) if any of the factors referred to in subparagraph (3) and, under appropriate circumstances, subparagraph (6), are found to exist. In those cases involving a fraudulent violation, the existence of aggravating factors may justify less relief than the normal disposition outlined above. The normal disposition in cases involving negligence or gross negligence is the statutory amount; therefore, the existence of aggravating factors cannot result in less relief than the normal disposition.

(3) *Mitigating factors.*—Listed below are the usual mitigating factors which may justify mitigation of a claim for a monetary penalty beyond that provided in subparagraph (1). If it is anticipated that a mitigating factor other than those discussed below will form the basis for additional relief, advice should be requested from the Chief, Commercial Fraud and Negligence Penalties Branch, to insure uniform application throughout the Customs Service.

(*a*) *Contributory Customs error*

This factor does not include the failure of the Customs officials to notice the fact or facts upon which the claim is based, nor does it include the absence of specific guidelines relating to the subject matter of the alleged violations. This factor would include erroneous advice given by a Customs official, if it appears that the violator reasonably relied upon the information. If the claimed erroneous advice was not

given in writing, the violator has the burden of establishing this claim by a preponderance of the evidence.

(*b*) *Cooperation in investigation*

In order to obtain the benefits of this factor, the violator must exhibit cooperation beyond that expected from a person under investigation for a Customs violation. Some examples of the cooperation contemplated include assisting Customs officials to an unusual degree in auditing the books and records of the violator and assisting Customs in obtaining additional information relating to the subject violation or other violations. Merely providing the books and records of the company involved may not be considered cooperation justifying mitigation.

(*c*) *Immediate remedial action*

This factor would include the immediate payment of the duties withheld from the United States. In certain extreme circumstances, this factor may include the removal of an offending employee. The correction of organizational or procedural defects will not be considered a mitigating factor. It is expected that any importer or other involved individual will seek to remove or change any condition which contributed to the existence of a violation.

(*d*) *Inexperience in importing*

In order for the violator to benefit from this factor, the violation must have resulted from ordinary negligence and the inexperience must be specifically related to the violation. For example, an experienced manufacturer of shirts who begins importing will not usually be granted mitigation if it misdescribes the content of the shirt.

(*e*) *Prior good record*

In order for the violator to benefit from this factor, the violation must have occurred as a result of negligence or gross negligence, and the violator must be able to show a consistent pattern of importations without violation of section 592. This pattern does not, of course, involve entries which are the subject of the instant investigation.

NOTE.—The burden of proving the existence of any mitigating factor rests with the violator. The mere assertion of the existence of the mitigating factor without satisfactory elaboration or documentation will not be considered sufficient evidence.

(4) *Aggravating factors.*—In cases involving ordinary or gross negligence, aggravating factors should only be considered if the existence of mitigating factors (subparagraph (3)) has been established. In cases involving fraudulent violations, aggravating factors may always be considered.

328-755 O - 80 - 2

The following items constitute examples of aggravating factors:

(a) Obstructing the investigation, e.g., withholding evidence.
(b) Lack of cooperation.
(c) Prior violations of the Customs laws.

If the District Director contemplates the use of an aggravating factor not listed here, advice should first be requested from the Chief, Commercial Fraud and Negligence Penalties Branch to insure uniform application of aggravating factors throughout the Customs Service.

(5) *Disposition of cases involving mitigating factors or aggravating factors.*—In order to insure general uniformity, mitigation of claims for monetary penalties beyond that provided in subparagrpah (1) shall be as follows:

(a) The existence of one mitigating factor found in subparagraph (3) may not, in every case, justify any mitigation beyond normal disposition. Mitigation may, however, be granted by the authorized Customs official in an amount not to exceed 25 percent of the total loss of duties.

Example—Assuming a monetary penalty based on a finding of gross negligence, with a resulting loss of revenue of $1,000, the normal disposition would be $4,000, plus the deposit of any actual loss of duties. The presence of one mitigating factor as provided in subparagraph (3) may, where deemed appropriate, permit mitigation of the claim for monetary penalty to an amount between $3,750 and $4,000, plus the deposit of any actual loss of duties.

(b) The existence of two mitigating factors will ordinarily require mitigation in an amount no less than 25 percent of the total loss of duties or no greater than 50 percent of the total loss of duties.

Example—Assuming the same circumstances as in the preceding example, the presence of two mitigating factors may, where deemed appropriate, permit mitigation of the claim for monetary penalty to an amount between $3,500 and $3,750, plus the deposit of any actual loss of duties.

(c) The existence of three mitigating factors will ordinarily result in mitigation in an amount no less than 50 percent of the total loss of duties or no greater than 75 percent of the total loss of duties.

Example—Assuming the same circumstances as in subparagraph (5)(a), the presence of three mitigating factors may, where deemed appropriate, permit mitigation of the claim for monetary penalty to an amount between $3,250 and $3,500 plus the deposit of any actual loss of duties.

(d) The existence of four or more mitigating factors would ordinarily justify mitigation in an amount equal to one time the total loss of duties.

Example—Assuming the same circumstances as in subparagraph (5)(a), the presence of four or more mitigating factors may, where deemed appropriate, permit mitigation of the claim for monetary penalty to $3,000.

Assuming a monetary penalty based on a finding of fraud with a loss of revenue of $1,000, the normal disposition would be $8,000, plus the deposit of any actual loss of duties. In such cases, the presence of four or more mitigating factors may, where deemed appropriate, permit mitigation of the claim for monetary penalty to $7,000.

(e) The existence of any mitigating factor may be negated by a finding of an aggravating factor on a 1-to-1 basis; or, in appropriate cases, a severe aggravating factor may negate all mitigating factors.

(f) In cases involving fraudulent violations, the existence of aggravating factors may serve as a basis for justifying less relief than that provided in subparagraph (1), unless negated by mitigating factors. For each aggravating factor not offset by mitigating factors, the normal disposition may be increased by one time the total loss of duties. The mitigated claim may not, however, exceed the domestic value of the merchandise.

Example.—Assuming a monetary penalty based on a finding of fraud with the loss of revenue of $1,000, the normal disposition would be $8,000, plus the deposit of any actual loss of duties. The presence of one aggravating factor would, where deemed appropriate, permit mitigation to an amount not to exceed $9,000 (i.e., $8,250, $8,500, or $8,750). The presence of two aggravating factors would permit mitigation to an amount not to exceed $10,000.

(g) In the event mitigation in an amount exceeding that authorized above is contemplated, advice should be sought from the Chief, Commercial Fraud and Negligence Penalties Branch to insure uniformity throughout the Customs Service.

(6) *Other extraordinary factors justifying further relief.*—After a final determination has been made with respect to the culpability of the violator and the existence or nonexistence of mitigating or aggravating factors, the following four factors may be considered in connection with further relief. If it is contemplated that one or more of these four factors will serve as a basis justifying further relief beyond that provided in subparagraphs (1) and (5), advice should be requested from the Chief, Commercial Fraud and Negligence Penalties Branch.

(a) Difficulty in obtaining jurisdiction over the violator.

(b) Inability to pay the normal disposition or mitigated amount. The party claiming the existence of this factor must present documentary evidence in support thereof, i.e., copies of income tax returns, current financial statements, and independent audit reports.

(c) Extraordinary expenses. This factor may include such expenses as those incurred in providing one-time computer runs solely for submission to the Customs Service to aid it in analyzing a case involving an unusual number of entries, each involving several factors, e.g., violations involving item 807, Tariff Schedules of the United States. Usual accounting and legal expenses (both general and Customs), or the cost incurred in instituting remedial action would not be considered extraordinary expenses.

(d) Customs knowledge of the violation. Additional relief may, in certain limited circumstances, be granted if it is determined that the Customs Service had actual knowledge of a violation (as opposed to constructive knowledge of a violation) of section 592 for a period exceeding 6 months in cases involving ordinary negligence or 12 months in cases involving gross negligence and failed to inform the violator so that corrective action might be taken with respect to future entries. This factor shall not be applicable where any delay in the investigation is attributable to the violator. Any additional relief which may be justified with respect to this factor would be limited to those entries filed after the periods of time outlined.

(C) DISPOSITION OF CASES INVOLVING NO LOSS OF DUTIES

(1) *Normal disposition.*—For cases involving negligence or gross negligence, normal disposition under title 19, United States Code, section 1618 will result in no relief from the monetary penalties prescribed by section 592; i.e., for negligence, 20 percent of the dutiable value of the merchandise; and for gross negligence, 40 percent of the dutiable value of the merchandise. For cases involving fraud, normal disposition will result in a mitigated liability equal to 80 percent of the domestic value of the merchandise. When a claim for monetary penalty is made in connection with violations involving both a loss of duties and no loss of duties, disposition of each violation will have to be made independently.

This paragraph also applies to those cases involving a claim for monetary penalty which is originally determined to involve a loss of duties, but after investigation, it is concluded that no loss of duties is involved. For example, the District Director may issue a claim for monetary penalty for failure to declare a commission which is believed to be a dutiable selling commission; however, after investigating the claims of the petitioner, it is determined that the commission was a nondutiable buying commission. Although there is no loss of duties, there is still a violation of section 592.

(2) *Additional considerations.*—Additional relief beyond the normal disposition shall be provided in accordance with subparagraph (3) below, if any of the factors referred to in paragraph (B)(3) and, under appropriate circumstances, paragraph (B)(6), are found to exist. In those cases involving a fraudulent violation, the existence of aggravating factors may justify less relief than the normal disposition outlined above. The normal disposition in cases involving negligence or gross negligence is the statutory amount; therefore, the existence of aggravating factors cannot result in less relief than the normal disposition.

(3) *Disposition of cases involving mitigating factors or aggravating factors.*—In order to insure general uniformity, mitigation of claims for monetary penalties beyond that provided in subparagraph (1) shall be as follows:

(a) The existence of one mitigating factor found in paragraph (B)(3) may not, in every case, justify any mitigation beyond normal disposition. Mitigation may, however, be granted by the authorized Customs official in an amount not to exceed 4 percent of dutiable value in cases of ordinary negligence, 5 percent of dutiable value in cases of gross negligence, and 10 percent of domestic value in cases involving fraud.

Example—Assuming a monetary penalty based on ordinary negligence where the dutiable value of the merchandise is $10,000, the normal disposition would be $2,000 (20 percent of dutiable value). The presence of one mitigating factor may, where deemed appropriate, permit mitigation of the claim for monetary penalty to an amount between $1,600 and $2,000 (0.04×$10,000=$400).

Assuming a monetary penalty based on fraud where the domestic value of merchandise is $20,000, the normal disposition would be $16,000 (80 percent of domestic value). The presence of one mitigating factor may, where deemed appropriate, permit mitigation of the claim for monetary penalty to an amount between $14,000 and $16,000 (0.10×$20,000=$2,000).

(b) The existence of two mitigating factors will ordinarily require mitigation:

i. in cases of ordinary negligence, in an amount no less than 4 percent or greater than 8 percent of dutiable value;

ii. in cases of gross negligence, in an amount no less than 5 percent or greater than 10 percent of dutiable values;

iii. in cases involving fraud, in an amount no less than 10 percent or greater than 20 percent of domestic value.

Example—Ordinary negligence: Assuming the same circumstances as in the preceding example involving ordinary negligence, the

presence of two mitigating factors may, where deemed appropriate, permit mitigation of the claim for monetary penalty to an amount between $1,200 and $1,600 (0.08×$10,000=$800).

Fraud: Assuming the same circumstances as in the preceding example, the presence of two mitigating factors may, where deemed appropriate, permit mitigation of the claim for monetary penalty to an amount between $12,000 and $14,000 (0.20×$20,000=$4,000).

(c) The existence of three mitigating factors will ordinarily result in mitigation:

i. in cases of ordinary negligence, in an amount no less than 8 percent or greater than 12 percent of dutiable value;

ii. in cases of gross negligence, in an amount no less than 10 percent or greater than 15 percent of dutiable value;

iii. in cases involving fraud, in an amount no less than 20 percent or greater than 30 percent of domestic value.

Example—Ordinary negligence: Assuming the same circumstances set out in the earlier examples, the presence of three mitigating factors may, where deemed appropriate, permit mitigation of the claim for monetary penalty to an amount between $800 and $1,200 (0.12× $10,000=$1,200).

Fraud: Assuming the same circumstances set out in the earlier examples, the presence of three mitigating factors may, where deemed appropriate, permit mitigation of the claim for monetary penalty to an amount between $10,000 and $12,000 (0.30×$20,000=$6,000).

(d) The existence of four or more mitigating factors would ordinarily justify mitigation in an amount equal to 16 percent of dutiable value in cases of ordinary negligence, 20 percent of dutiable value in cases of gross negligence, and 40 percent of domestic value in cases involving fraud.

Example—Ordinary negligence: Assuming the same circumstances set out in the earlier examples, the presence of four or more mitigating factors may, where deemed appropriate, permit mitigation of the claim for monetary penalty to $400 (0.16×$10,000=$1,600).

Fraud: Assuming the same circumstances set out in the earlier examples, the presence of four or more mitigating factors may, where deemed appropriate, permit mitigation of the claim for monetary penalty to $8,000 (0.40×$20,000=$8,000).

(e) The existence of any mitigating factor may be negated by a finding of an aggravating factor on a 1-to-1 basis; or, in appropriate cases, a severe aggravating factor may negate all mitigating factors.

(f) In cases involving fraudulent violations, the existence of aggravating factors may serve as a basis for justifying less relief than that provided in this paragraph, unless negated by mitigating factors.

For each aggravating factor not offset by mitigating factors, the normal disposition may be increased by 10 percent of the domestic value. The mitigated claim may not, however, exceed the domestic value of the merchandise.

Example—Assuming a monetary penalty based on a finding of fraud where the domestic value is $20,000, the normal disposition would be $16,000. The presence of one aggravating factor would, where deemed appropriate, permit mitigation to an amount not to exceed $18,000 (i.e., $16,500, $17,000, or $17,500).

(g) In cases involving a prior disclosure, and the degree of culpability is determined to be ordinary negligence or gross negligence, the claim for monetary penalty is to be remitted in full. In cases involving a prior disclosure, and the degree of culpability is determined to be fraud, the claim for monetary penalty, an amount equal to 10 percent of the dutiable value, shall not be mitigated in the absence of extraordinary factors. See paragraph (B)(6) above.

(h) In the event mitigation in an amount exceeding that authorized above is contemplated, advice should be sought from the Chief, Commercial Fraud and Negligence Penalties Branch to insure uniformity throughout the Customs Service.

(D) VIOLATIONS OF LAWS ADMINISTERED BY OTHER AGENCIES

Violations of laws administered by other agencies (such as Foreign Assets Control, Agriculture, Fish and Wildlife) should be referred to the appropriate agency for its recommendations. In the absence of extraordinary circumstances, such recommendations shall be followed. In the event it is contemplated that such recommendations should not be followed, advice shall be requested from the Chief, Commercial Fraud and Negligence Penalties Branch.

(E) LIABILITY OF CUSTOMHOUSE BROKERS

A broker should be held liable and subject to these guidelines only if he (1) committed a fraudulent violation, or (2) is otherwise culpable and shared in the financial benefits from the violation. If both importer and broker are actually culpable and shared in the financial benefits, each party may be assessed the penalty as finally determined under these guidelines. If the broker committed a negligent violation without sharing in the financial benefits, the penalty should be mitigated to a flat sum appropriate to the degree of negligence. In such cases involving ordinary negligence on the part of the broker, the flat sum should ordinarily not exceed $250. In cases involving gross negligence on the part of the broker, the flat sum should ordinarily not exceed $500.

A broker should not be held as a guarantor to make the Government whole (by payment of the actual loss of revenue) where he himself is not guilty of a violation. Filing an entry as importer of record (in his own name on behalf of an importer), would not alone make the broker liable for the actual loss of revenue or any penalty. If he is the importer of record, the broker is, of course, responsible for payment of any increased duties found to be due.

Decisions of the United States Court of Customs and Patent Appeals

(ITC Investigation No. 337 TA-52)

SOUTHWIRE CO. *v.* UNITED STATES INTERNATIONAL TRADE COMMISSION No. 79-25/31

1. SECTION 337 TARIFF ACT OF 1930, AS AMENDED (19 U.S.C. 1337)—COPPER ROD.

International Trade Commission decisions terminating portions of Investigation under 19 U.S.C. 1337 involving the importation of a continuous casting and hot rolling system.

2. ITC SUMMARY DETERMINATION—LICENSES.

The parties' contract licensed Bell to acquire and operate its continuous casting and hot rolling system, and the ITC's summary determination to that effect was proper, there being no issue of material fact.

3. ID.—WAIVER OF 30-DAY REQUIREMENT.

Waiver by the ITC of the 30-day requirement for filing a motion for summary determination is proper where there are good and sufficient reasons present.

Appeal No. 79-25

SOUTHWIRE COMPANY *v.* UNITED STATES INTERNATIONAL TRADE COMMISSION AND FRIED, KRUPP GMBH AND KRUPP INTERNATIONAL AT&T, WESTERN ELECTRIC CO. ET AL

Appeal No. 79-31

SOUTHWIRE COMPANY *v.* UNITED STATES INTERNATIONAL TRADE COMMISSION AND FRIED, KRUPP GMBH AND KRUPP INTERNATIONAL AT&T, WESTERN ELECTRIC CO. ET AL

The attorneys for the above appeal are as follows:

Southwire Appeals—79-25 and 31

Herbert Cohen, Victor M. Wigman, George C. Myers, Jr., Wigman & Cohen, 1735 Jefferson Davis Highway, Arlington, Va. 22202.

James H. Bratton, Jr., Frederick G. Boynton, Gambrell, Russell & Forbes, 4000 First National Bank Tower, Atlanta, Ga.

328-755 O - 80 - 3

Appeal No. 31 only

Thomas W. Rhodes, Jane K. Wilcox, Gambrell, Russell and Forbes, 4000 First National Bank Tower, Atlanta, Ga. 30303.

International Trade Commission—Appeals 79-25 and 79-31

Jeffrey S. Neeley, Advisory Attorney, International Trade Commission Washington, D.C. 20436.

Scott Daniels, Office of the General Counsel, International Trade Commission, Washington, D.C. 20436.

Western Electric, AT&T, Nassau Recycle Corp.—79-25 and 79-31

Edward Dreyfuss, Western Electric, 222 Broadway, New York, N.Y. 10038.

Appeal No. 79-25 only

Bernard Zucker, Western Electric, 222 Broadway, New York, N.Y. 10038.
Edwin B. Cave, 25 Alden Road, New Providence, N.J. 07974.

Krupp International et al.—79-25 and 79-31

Harvey Kaye, George Spencer, Sheldon I. Landsman, Spencer and Kaye, Washington, D.C. 20036.

Peter Stahlmann, Krupp International, 550 Mamaroneck Avenue, Harrison, N.Y. 10528.

79-25 only

Michael A. Hertzberg, Spencer and Kaye, 1111 19th Street NW., Washington, D.C. 20036.

Argued on June 4, 1980 by *James H. Bratton, Jr.* for appellant Southwire, *Edward Dreyfuss* and *Bernard Zucker* for appellee AT&T et al., and *Scott Daniels* for appellee ITC.

Before MARKEY, *Chief Judge*, BALDWIN, and MILLER, *Associate Judges*, SMITH, *Judge*,[1] and RE, *Judge*.[2]

MARKEY, Chief Judge.

[1] Southwire Co. (Southwire) appeals from two decisions of the U.S. International Trade Commission (ITC) terminating portions of investigation No. 337-TA-52, *In re Certain Apparatus for the Continuous Production of Copper Rod*. The investigation concerned alleged infringement of several Southwire patents by American Telephone & Telegraph Co. (ATT) and its subsidiaries Western Electric Co. (Western) and Nassau Recycle Corp. (Nassau). We affirm.

BACKGROUND

In 1949, the Government instituted an antitrust suit against Western and ATT. In 1956, the suit was resolved by entry of a consent decree enjoining Western and ATT from (1) acquiring, directly or

[1] Hon. Edward S. Smith, Judge, U.S. Court of Claims, sitting by designation.
[2] Hon. Edward D. Re, Chief Judge, U.S. Customs Court, sitting by designation.

indirectly, title to any patent owned or controlled by any entity other than a company of the Bell System or its employees, and (2) receiving any right to grant sublicenses under patents except to associated companies. The decree permitted Western and ATT to accept patent licenses that granted the right to make, have made, use, lease, and sell certain equipment.

On August 22, 1962, Western and Southwire entered into a joint development contract. Their objective was to develop to Western's satisfaction a continuous casting and hot rolling system (SCR system) for copper rod, the system being operable at a rate of not less than 10 tons per hour. Western planned to use the system at Nassau's facility on Staten Island, N.Y., and hoped that it would be capable of processing all of its existing copper scrap and all of its copper scrap for the following 10 years.

Western and Southwire agreed that each would purchase and own title to an undivided one-half interest in equipment used in the development program and that Western would have the option of purchasing Southwire's one-half interest. Both companies were to provide at least two engineers for the program and were to share costs. The development work was to be carried out at Southwire's Carrollton, Ga. plant.

In the development contract, each party granted to the other royalty-free, nonexclusive licenses under patents on inventions made during the contract period.[3] Those licenses allowed both companies to make, have made, use, lease, and sell the patented inventions. Both companies were also given the right to grant sublicenses to associated companies.

The development contract further provided that 1 year after the end of the contract period, both companies would have the unrestricted right to reproduce, use, have used, disclose or dispose of all information originated by the parties under the contract, and all reports, specifications, drawings, data or other technical information required to be furnished by Southwire under the contract.

The joint development contract terminated on August 30, 1963. On September 17, 1963, Western exercised its option to purchase Southwire's interest in the development equipment. On January 28, 1964, Western and Southwire amended the development contract to provide that Western would receive Southwire's new SCR casting and rolling machines instead of those used during the development program and that Southwire would deliver the new system to Nassau's Staten Island facility. Southwire delivered the system to Staten Island in 1964 and it has been in continuous use there since that time.

---

[3] The contract period is defined in art. II, sec. 3 of the contract to be from Aug. 22, 1962, to Aug. 30, 1963.

On July 31, 1964, Southwire and Western entered into a formal license agreement, effective September 1, 1963. The agreement was intended to be a means of continuing work on the development program. Each party granted to the other royalty-free, nonexclusive licenses under patents on inventions made during designated time periods. Those licenses permitted both companies to make, have made, use, lease, and sell the patented inventions. Both companies were also given the right to grant sublicenses to associated companies.

A number of patents were granted on inventions covered by the 1962 development contract and the 1963 license agreement, including U.S. Patent Nos. 3,317,994 ('994 patent), 3,672,430 ('430 patent), 3,716,423 ('423 patent), and 4,129,170 ('170 patent).

In 1972, Southwire sold a second SCR system to Western for installation at its Hawthorne plant in Chicago, Ill. In conjunction with the sale, Southwire entered into a user's license agreement granting Western certain rights with respect to inventions made by Southwire prior to the startup of that system. The agreement further indicated that the 1963 license agreement had already licensed Western under the '994, '430, and '423 patents. Several Southwire employees later visited the Hawthorne plant, seeking to inspect and copy documents specified in the 1962 joint development contract. Western refused to supply the requested documents. Southwire attempted to obtain those and other documents for more than 1 year after its initial request but Western continued to refuse.

In 1976, Southwire offered Western another SCR system for installation at Nassau's Gaston, S.C., facility. The offer included a royalty-free license.[4] In a September 3, 1976 letter, a Southwire officer told a Nassau officer that the 1963 license agreement already licensed Nassau under the '994, '430, and '423 patents. On November 16, 1976, Southwire's president told the same Nassau officer that the 1962 development contract, the 1963 license agreement, and the 1972 user's license agreement already licensed Nassau for some of the SCR equipment but that those agreements gave Nassau no right to use at Gaston equipment patented by Southwire after the termination date of the 1963 license agreement. Western refused Southwire's offer and purchased a comparable system from Fried. Krupp GmbH and Krupp International, Inc. (collectively, Krupp).

On April 11, 1978, Southwire filed a complaint with the ITC against Western, AT&T, and Nassau (collectively Bell) and Krupp alleging unfair trade practices under section 337 of the Tariff Act of 1930, as amended, 19 U.S.C. 1337 (sec. 337).[5] Southwire charged

[4] A royalty was included in the equipment price.

[5] 19 U.S.C. 1337 reads, in part: "Unfair methods of competition and unfair acts in the importation of articles into the United States * * * the effect or tendency of which is to destroy or substantially injure an industry * * * in the United States * * * are declared unlawful * * *."

Krupp and Bell with infringing the '994, '430, and '423 patents and with misappropriating Southwire's trade secrets.

On September 26, 1978, Bell moved (motion 52–41) to terminate the investigation with respect to the '994, '430, and '423 patents insofar as they related to Bell and to Krupp's activities at Gaston. The basis for the motion was that the 1962 development contract and the 1963 license agreement licensed Bell under those patents for the Gaston facility and that Krupp's activities respecting that facility fell within Bell's "have made" license rights.

Southwire opposed motion 52–41, arguing that the existence of genuine issues of material fact precluded summary determination of whether Bell was licensed for the Gaston facility. In Southwire's view, Bell's licenses extended only to its plant at Staten Island. Southwire also argued that enforcement of Bell's license defense would violate the antitrust consent decree because it would effectively give Bell title to Southwire's patents and would sanction Bell's illegal sublicensing of Krupp.

The hearing in the investigation began on March 28, 1979.

On March 29, 1979, the ITC granted motion 52–41, having treated it as a motion for summary determination, and terminated that part of the investigation involving alleged infringement of the '994, '430, and '423 patents by Bell and that part of the investigation involving alleged infringement of the '994, '430, and '423 patents by Krupp's manufacture and importation of the system at Gaston. Southwire appealed on May 29, 1979 (appeal No. 79–25).

On November 3, 1978, Southwire moved the ITC to amend its complaint to include a charge of infringement of the '170 patent. The ITC granted the motion of January 31, 1979. On April 6, 1979, Bell moved (motion 52–250) to terminate the investigation with respect to the '170 patent, insofar as it related to Bell and to Krupp's activities at Gaston. That motion was also based on the licensing provisions of the joint 1962 development contract and the 1963 license agreement.

Southwire opposed that motion, repeating arguments it made in opposing motion 52–41. In addition, Southwire argued that Western's refusal to give Southwire development program documents was a violation of the development contract which should equitably estop Bell from using the licensing provision of that contract as an affirmative defense here. Southwire also argued that the motion was not a motion for termination but was in truth a motion for summary determination and that as such it was not timely filed.

On June 20, 1979, the ITC granted motion 52–250, having treated it as a motion for summary determination, and terminated that part of the investigation involving infringement of the '170 patent by Bell and by Krupp's manufacture and importation of the system at

Gaston. Southwire appealed on August 16, 1979 (appeal No. 79–31). We consolidated appeal Nos. 79–25 and 79–31.

ISSUES

The issues are (1) whether Bell was licensed for its facility at Gaston, (2) whether Bell's licenses were illegal under the antitrust consent decree, (3) whether Bell is equitably estopped from using its licenses as an affirmative defense, and (4) whether Bell's motion 52–250 was timely filed.[6]

OPINION

I. License for Gaston

[2] Southwire argues that there are genuine issues of material fact respecting the scope of Bell's licenses and that summary determination that Bell was licensed for the Gaston facility is thus precluded, maintaining that those licenses extend only to the one system located at Staten Island. We disagree.

Bell's licenses under the Southwire patents, set out in two Western-Southwire agreements, i.e., the 1962 joint development contract and the 1963 license agreement, are clear and unambiguous. Their interpretation thus involves no issue of material fact.

Article II, section 1 of the 1962 contract and article I, section 1 of the 1963 agreement license each party for "continuous metal casting systems." On their face those documents grant licenses for an indeterminate number of systems. Southwire attempts to rewrite the agreements in an effort to demonstrate that "systems" (plural) meant "system" (singular) in context. In Southwire's view, "systems" (plural) was used in the agreements merely as a convenient and grammatically correct way of indicating, in one sentence, that each party was to receive a license for one system. Southwire cannot be permitted now to rewrite the agreements to support its view. "Systems" (plural) was the contract term used in the license granting clause. "System" (singular) was elsewhere expressly and specifically defined in the agreements[7] (article IX of the 1962 agreement and article VII of the 1963 agreement). Use of the plural term "systems" in the license-granting clauses of the agreements thus demonstrates that the parties intended to license each other for more than one system.

Moreover, article I, section 7 of the 1963 agreement gave Western the right to grant sublicenses to "its associated companies." The

[6] Bell argued in its brief that appeal No. 79-31 should be dismissed because it was moot. Bell withdrew that contention, however, at oral argument. We express no view respecting the mootness of appeal No. 79-31.

[7] "Continuous metal casting system" means any aggregate of instrumentalities of a design primarily adapted for continuously casting metal rod * * *.

1963 agreement was entered into on July 31, 1964, more than 6 months after Southwire agreed to deliver Western's first SCR system to its Nassau subsidiary at Staten Island. The article I, section 7 right to sublicense associated companies would be superfluous unless the parties anticipated and intended that Western would construct systems at other locations as well.

The parties' intent to grant licenses for a number of systems is further demonstrated by the July 31, 1964, modification of the 1963 agreement. Western and Southwire agreed that Western's right to sell continuous casting systems which Western possessed by virtue of its right to "make, have made, use, lease, and sell" would be limited to the sale of only surplus systems. That modification was necessary only if Bell was licensed under the original agreement for more than one system.

Southwire's actions were consistent with Bell's having been licensed for multiple systems. The 1972 user's license agreement between Southwire and Western and Southwire's proposed user license for the Gaston facility acknowledged that Bell was already licensed for those facilities under the 1963 license agreement. The November 16, 1976, communication between Southwire's president and Nassau stated:

> [Southwire] quoted you a system without regard to royalties notwithstanding the fact that some of the know-how, technology, and equipment design are not covered by virtue of our original development agreement nor by the second sale of an SCR system to your organization for installation at Hawthorne Plant, Chicago, Ill. * * *
>
> We feel it our duty in consideration * * * of our very long standing relations to advise you that Southwire has an issue of patents with Krupp/Hazelett which would apply to your Gaston works insofar as it incorporates inventions patented by Southwire subsequent to September 1, 1968.

The communication is an admission that Bell was licensed under the 1962 and 1963 contracts and that those licenses could be used by Nassau at Gaston. The reference to September 1, 1968, relates to the termination date of the 1963 license agreement. The communication thus indicates that because of the existence of the 1963 license to Bell for Gaston, the patent dispute with Krupp only involved patents on inventions arising subsequent to September 1, 1968.

Southwire relies on section 6 of article I of the 1963 agreement which limits Western's licenses as follows:

Such licenses do not extend

(i) to any combination of any two or more of such equipments, or
(ii) to any combination comprising one or more of such equipments and any other instrumentality,

under any patent of the grantor of said licenses which is applicable to such combination otherwise than solely by being applicable to one or more of such equipments separately.

Contrary to Southwire's arguments, that section does not limit Western's use of a continuous metal casting system to a single location, i.e., Staten Island.

"Equipment" is the contractual shorthand term for "continuous metal casting system" (art. I, sec. 1). The "combination" of two o more continuous metal casting systems referred to in article I, section 6(i) necessarily relates only to systems that work in cooperation with each other. It would contort the common meaning of "combination" to construe it as covering systems that work independently at separate locations.

"Continuous metal casting system" is defined by article VII, section I of the 1963 agreement as an "aggregate of instrumentalities of a design primarily adapted for continuously casting metal rod." The section 6(ii) phrase "any other instrumentality" must therefore refer to instrumentalities not primarily designed for continuously casting metal rod. That section thus relates only to a combination of a continuous metal casting system and an instrumentality not primarily designed for continuously casting metal rod. A continuous metal casting system at one location and the same kind of system in another location would not be a combination within the meaning of article 1, section 6(ii).

Southwire also relies on parole evidence in an attempt to prove that neither party contemplated more than one system at the time they entered into the licensing agreements and that it would have been economically disastrous for Southwire to license Bell for more than one system. That evidence conflicts with the clear and unambiguous language of the 1962 joint development contract and 1963 license agreement and is therefore of no benefit to Southwire.

Construction of both the 1962 development contract and the 1963 license agreement, according to their terms, is governed by the law of New York, where "the intention of the parties is found in the language used to express such intention." *Nau* v. *Vulcan Rail and Const. Co.*, 286 N.Y. 188, 197–99, 36 N.E. 2d 106, 111 (1941), and "the words of a contract are always the most important evidence of the parties' intention." *Eddy* v. *Prudence Bonds Corp.*, 165 F. 2d 157, 161–62 (2d Cir. 1947), *cert. denied*, 333 U.S. 845 (1948). The expressed contractual intent of the parties being clear, it must be upheld. Accordingly, we hold that Bell was licensed to acquire and operate its Gaston facility.

II. Consent Decree

Southwire contends that Bell's licenses violated certain prohibitions of the 1956 consent decree. We disagree.

Article XII of the decree prohibits Bell from directly or indirectly acquiring title to patents of any person other than associated companies and employees thereof. Crucial indicia of title being absent, the nonexclusive license acquired by Western was not tantamount to title. The licenses gave Western only the right to make, have made, use, lease, and sell the patented inventions and the right to sublicense associated companies. Southwire, however, retained the exclusive right to license others and, most importantly, retained the exclusive right to sue infringers. The Supreme Court has stated:

> The owner of a patent may assign it to another and convey, (1) the exclusive right to make, use and vend the invention throughout the United States, or, (2) an undivided part or share of that exclusive right, or (3) the exclusive right under the patent within and through a specific part of the United States. But any assignment or transfer short of one of these is a license, giving the licensee no title in the patent and no right to sue at law in his own name for an infringement.

United States v. *General Electric Co.*, 272 U.S. 476, 489 (1926). Bell thus did not receive title to Southwire's patents in contravention of the consent decree.

Section X(G)(3) of the consent decree prohibits Bell from "granting or receiving any right to grant sublicenses under patents" except to associated companies. Bell's ordering of equipment from Krupp was merely an exercise of Bell's rights under the "have made" clause of its licenses. That clause permitted Bell to have the equipment made for it by Krupp. Bell did not authorize Krupp to make the equipment for or sell it to anyone other than Bell, and thus did not grant a sublicense to Krupp. The difference between a licensee's exercise of his "have made" rights and his granting of a sublicense was well stated by the U.S. Court of Claims:

> A licensee having the right to produce, use and sell might be interested only in using the article or in selling it; in order to use it or sell it, the article must be produced; to have it produced, his license permits him to engage others to do all the work connected with the production of the article for him. Production of the article for the use of the licensee is production under the license.
>
> Not so under a sublicense, unless the sublicensee is producing for the original licensee. To produce for his own use or for the use of someone else, the sublicensee may do so only under a sublicense. So the test is, whether the production is by or for the use of the original licensee or for the sublicensee himself or for someone else.

Carey v. *United States*, 326 F. 2d 975, 979–80 (Ct. Cl. 1964). The "have made" rights received and exercised by Bell are thus not precluded by section X(G)(3) of the consent decree.

The ITC properly rejected Southwire's illegality arguments, Bell having neither acquired title to Southwire's patents nor granted or received the right to grant sublicenses under those patents to Krupp.

III. Equitable Estoppel

Southwire argues that Western was guilty of inequitable conduct in refusing to supply documents Southwire says it was entitled to receive under the development contract, and that such conduct estops Bell from relying on the licensing provision of the contract. We disagree.

Article V, section 3(e) of the 1962 development contract provides:

> Nothing contained in this contract shall be construed as * * * an obligation to furnish any manufacturing or technical information except as provided in section 1 of article III hereof and subdivision (iv) of paragraph (b) of section 2 of this article V.

Section 1, article III requires Southwire to supply specified information. It does not, however, impose a similar obligation on Western. Western's only obligation to supply information is found in article V, section 2(b), which relates only to inventions made jointly by Western and Southwire employees. Southwire does not contend that the information it sought related to joint inventions.

Southwire relies on section 2(a), article III, which gives each party the right, 1 year after the end of the contract period, to "reproduce, use, have used, disclose and dispose of any and all information, knowledge or data originated or first produced by Southwire, or Western, or their respective employees, in the course of any work performed under this contract * * *." Southwire overlooks section 2(b), article III however. That section states that, prior to the end of the 1-year period, Southwire and Western must "exercise reasonable care to avoid publication or other disclosure" of the information referred to in section 2(a) "to any third parties not under a written obligation to keep such information confidential." When sections 2(a) and 2(b) are read together it is apparent that section 2(a) is nothing more than a release from the confidentiality obligation of section 2(b) at the end of the 1-year period. Section 2(a) merely provides the parties a more relaxed set of information handling and disclosure rights after the 1-year period. It does not, however, impose a duty on either party to supply information to the other.

Western having had no duty to supply information to Southwire, Southwire's allegations respecting Western's refusal to do so fail to demonstrate breach of contract or any inequitable conduct by Western

sufficient to estop Bell from relying on its license under the 1962 contract.

IV. Timeliness

[3] Southwire contends that Bell's motion 52–250 was a motion for summary determination under rule 210.50 and that it was untimely because it was not filed 30 days prior to hearing as required by that rule.[8] The ITC found sufficient reasons to waive the 30-day requirement of rule 210.50.[9] We find those reasons persuasive.

Bell designated both of its motions as rule 210.51 motions to terminate based on license.[10] Bell could not have known that the ITC would interpret them as motions for summary determination under rule 210.50 until the ITC order of March 29, 1979, wherein motion 52–41 was so treated. That order was rendered 1 day after the commencement of the evidentiary hearing. Bell was thus totally unaware of the need to file motion 52–250 as a motion for summary determination under rule 210.50 until the time for filing such a motion had expired. Moreover, motion 52–250 was based primarily on the March 29 finding on the '994, '430, and '423 patents. It was thus reasonable for Bell to wait for that determination before filing motion 52–250, a virtually identical motion respecting the '170 patent.

Waiver of the time requirement imposed by rule 210.50 is a matter committed to ITC discretion. See *American Farm Lines* v. *Black Ball Freight Service*, 397 U.S. 532, 539 (1970). The ITC's exercise of that discretion in the present case was justified and it resulted in no prejudice to Southwire. Southwire provided extensive argument in its opposition to Bell's motion, the motion having presented issues that were nearly identical to issues Southwire had addressed in opposing motion 52–41.

---

[8] Rule 210.50, 19 CFR 210.50 (1979) provides in pertinent part:

Summary determinations.

(a) *Motions for summary determinations.*—Any party may move with any necessary supporting affidavits for a summary determination in his favor upon all or any part of the issues to be determined in the investigation. Counsel or other representatives in support of the complaint may so move at any time after 20 days following the date of service of the complaint and notice instituting the investigation, and any other party or a respondent may so move at any time after the date of publication in the Federal Register of the notice instituting the investigation. Any such motion by any party, however, must be filed at least 30 days before the date fixed for any hearing herein provided.

[9] Waiver of the rules is specifically provided for by rule 201.4(b), 19 CFR 201.4(b) (1979):

(b) *Alteration or waiver of rules.*—Rules in this chapter may be amended, waived, suspended, or revoked by the Commission only. A rule may be waived or suspended only when in the judgment of the Commission there is good and sufficient reason therefor, provided the rule is not a matter of procedure required by law.

[10] Rule 210.51, 19 CFR 210.51 (1979) provides in pertinent part:

Termination of investigation.

(a) *Motions for termination.*—Any party may move *at any time* for an order to determinate an investigation before the Commission, to terminate the investigation as to all issues in an investigation in regard to one or more, but not all, of the respondents, or to terminate the investigation as to any part of the issues in regard to any or all of the respondents. When a motion for termination is based upon licensing or other written agreements entered into between the parties, a copy of such licensing or other agreements shall be included with the motion. [Italic added.]

Southwire argues that the ITC failed to abide by rule 201.1 [11], saying that rule 210.50, a rule of special application, is inconsistent with and should prevail over rule 201.4(b), a rule of general application,

That argument is unavailing. There is no inconsistency between a rule imposing a time requirement, e.g., rule 210.50, and a rule giving the ITC authority to waive such requirement for good cause, e.g., rule 201.4(b).

CONCLUSION

Bell was licensed for its Gaston facility. That license was not illegal under the consent decree. Bell was not equitably estopped from using the license as an affirmative defense. The ITC properly exercised its discretion to entertain and decide motion 52–250 despite its untimeliness. Accordingly, the ITC's determinations of March 29, 1979, and June 20, 1979, granting motions 52–41 and 52–250 respectively and terminating the investigation with respect to the '994, '430, '423, and '170 patents insofar as they related to Bell and to Krupp's activities at Gaston is *affirmed*.

MILLER, Judge, concurring.

I agree with the majority's resolution of the first three issues. However, I disagree with its disposition of the timeliness issue in agreeing with ITC's waiver of the 30-day requirement of rule 210.50.[1] As the majority points out, Bell's motion 52–250 was filed under 19 CFR 210.51 (termination of investigation).[2] The ITC treated it not only as a motion for termination, but, erroneously it seems to me, also as a motion for summary determination. It said that "a summary determination on the issues must be reached in this case before a termination based on licenses, pursuant to rule 210.51, can be granted." However, there is nothing in this case that compels such a conclusion. Moreover, a motion for termination is not restricted to a situation in which a license or other written agreement is involved. The rule merely provides that when a motion for termination is based upon licensing "a copy of such licensing * * * agreements shall be included with the motion." Bell's motion should have been treated solely as a timely motion for termination, thus avoiding any need to consider waiver of the 30-day requirement of rule 210.50.

---

[11] Rule 201.1, 19 CFR 201.1 (1979) provides:

§ 201.1 Applicability of part.

This part 201 relates generally to functions and activities of the Commission under various statutes and other legal authority. Rules having special application appear separately in parts 202 and 207, inclusive, of this chapter. In case of inconsistency between a rule of general application and a rule of special application, the latter is controlling.

[1] The majority opinion states the issue as "whether Bell's motion 52–250 was timely filed."

[2] Under rule 210.51, a motion for termination can be made "at any time."

Because ITC's analysis of the substance of Bell's motion 52–250 was correct, and because ITC correctly treated it as a motion for termination, ITC's error in treating it also as a motion for summary determination was harmless.

Decisions of the United States Customs Court

United States Customs Court

One Federal Plaza
New York, N.Y. 10007

Chief Judge

Edward D. Re

Judges

Paul P. Rao
Morgan Ford
Scovel Richardson
Frederick Landis
James L. Watson
Herbert N. Maletz
Bernard Newman
Nils A. Boe

Senior Judge

Samuel M. Rosenstein

Clerk

Joseph E. Lombardi

Customs Rules Decision

(C.R.D. 80–9)

CONNORS STEEL COMPANY, PLAINTIFF *v.* UNITED STATES, DEFENDANT

Memorandum, Opinion and Order

Court No. 80–3–00478

Dated September 3, 1980

WATSON, Judge: This memorandum opinion concerns discovery sought by plaintiff, a domestic steel company, in furtherance of its action contesting an administrative determination that certain Belgian steel beams were not being sold in the United States at less than fair value.

By means of a request for production of documents and interrogatories, plaintiff sought business information submitted to the Customs service by the Belgian manufacturer and its subsidiary. The informa-

tion was received under a pledge of confidentiality and is now in the possession of the Department of Commerce to which the sales-at-less-than-fair-value stage of antidumping proceedings were transferred. The information includes names of customers and details of particular sales transactions.

Defendant United States, honoring its pledge, has moved for a protective order barring disclosure on the ground that damage will result to the business of those submitting the information. Defendant also argues that disclosure will discourage the submission of such information to the Government and thus impair the informational basis of the administration of the antidumping law. Plaintiff, relying on the relevance of the information has moved to compel discovery.

The court accepts the proposition that in the hands of a competitor the information in question can cause incalculable harm. The court also understands the desirability of encouraging the fullest possible submission of information to the administrative agencies charged with making determinations in the area of international trade. On the other hand, the court recognizes the necessity of allowing a party to fully prepare and present its legally authorized challenge to an administrative determination and to do so based on all available relevant material. In balancing these opposing considerations the most equitable solution appears to be to permit disclosure in a manner which will allow the information to be examined and utilized by the lawyers for plaintiff and designated experts for the purpose of this litigation but will forbid the further disclosure of the information to any other persons. In this regard the court relies on the lawyers, not as the alter egos of the plaintiff but as independent professionals and officers of the court.

In general, this approach conforms to the orders allowing disclosure of confidential information in *Pasco Terminals, Inc.* v. *United States*, 80 Cust. Ct. 249 (1978) and *Armstrong Brothers Tool Co., et al.* v. *United States*, 80 Cust. Ct. 252 (1978).

For the above reasons, it is

ORDERED, that plaintiff's motion to compel discovery be granted subject to the following terms:

1. The subject material shall be made available to counsel for plaintiff within 10 days of the entry of this order.

2. Counsel for plaintiff may disclose the material to the lawyers and office personnel working on the litigation.

3. No person to whom the material is disclosed shall at any time discuss or reveal the information to anyone except those authorized by this order.

4. No copies of the material shall be made except for the purposes of the litigation and as authorized in writing by counsel for plaintiff.

A record of the authorizations shall be maintained, together with a log showing the pertinent details of the copying.

5. At the conclusion of the litigation the material shall be returned to counsel for defendant, together with all copies not utilized in court papers. The record of authorizations and copy log shall also be turned over to defendant at that time.

6. The terms of this order may be modified upon the consent of defendant or upon a further order of the court.

Decisions of the United States Customs Court

Abstracts

Abstracted Protest Decision

DEPARTMENT OF THE TREASURY, *September 8, 1980.*

The following abstract of decision of the U. S. Customs Court at New York are published for the information and guidance of officers of the customs and others concerned. Although the decision is not of sufficient general interest to print in full, the summary herein given will be of assistance to customs officials in easily locating cases and tracing important facts.

ROBERT E. CHASEN,
Commissioner of Customs.

DECISION NUMBER	JUDGE & DATE OF DECISION	PLAINTIFF	COURT NO.	ASSESSED	HELD	BASIS	PORT OF ENTRY AND MERCHANDISE
				Par. or Item No. and Rate	Par. or Item No. and Rate		
P80/129	Newman, J. September 3, 1980	Veritas International, Inc.	77-6-01042	Item 700.60 20% (items marked "A", "B" and "C")	Item 700.45 10% (items marked "A") Item 700.55 6% (items marked "B") Item 700.83 8% (items marked "C")	Agreed statement of facts	Los Angeles Footwear

Decisions of the United States Customs Court

Abstracts

Abstracted Reappraisement Decisions

DECISION NUMBER	JUDGE & DATE OF DECISION	PLAINTIFF	COURT NO.	BASIS OF VALUATION	HELD VALUE	BASIS	PORT OF ENTRY AND MERCHANDISE
R80/276	Re, C.J. September 3, 1980	CBS Imports Corp.	74-5-01317, etc.	Export value	Appraised values shown on entry papers less additions included in appraised values to reflect currency revaluation	C.B.S. Imports Corp. v. U.S. (C.D. 4739)	New York Various articles
R80/277	Re, C. J. September 3, 1980	Stanton-Kutasi Company	74-2-00410	Export value	Appraised values specified on entry papers by liquidating officer, less any additions included in appraised value which reflect currency revaluation	C.B.S. Imports Corp. v. U.S. (C.D. 4739)	Los Angeles Various articles

International Trade Commission Notices

Investigations by the U.S. International Trade Commission

DEPARTMENT OF THE TREASURY

The appended notices relating to investigations by the U.S. International Trade Commission are published for the information of Customs officers and others concerned.

R. E. CHASEN,
Commissioner of Customs.

731–TA–29 (Preliminary)

ASPHALT ROOFING SHINGLES FROM CANADA

Notice of Change in Scheduled Date for Conference

AGENCY: U.S. International Trade Commission.

ACTION: The notice instituting the above-captioned investigation appearing in the Federal Register on September 4, 1980 (45 F.R. 58728), stated that the preliminary conference was scheduled for 10 a.m., e.d.t., on September 15, 1980. This notice is to inform all interested parties that the date of the conference has been changed to 10 a.m., e.d.t., September 22, 1980.

WRITTEN SUBMISSIONS: Will now be due on or before September 24, 1980.

FOR FURTHER INFORMATION CONTACT: Vera Libeau, Senior Investigator; 202–523–0368.

By order of the Commission.

Issued: September 4, 1980.

KENNETH R. MASON,
Secretary.

In the Matter of CERTAIN TURNING MACHINES AND COMPONENTS THEREOF	Investigation No. 337–TA–72

Commission Hearing on the Presiding Officer's Recommendation and on Relief, Bonding and the Public Interest, and the Schedule for Filing Written Submissions

AGENCY: U.S. International Trade Commission.

ACTION: The scheduling of oral argument and briefing for investigation No. 337–TA–72, Certain Turning Machines and Components Thereof.

Notice is hereby given that the presiding officer has filed his recommended determination that there is a violation of section 337 of the Tariff Act of 1930, as amended, in the unauthorized importation and sale in the United States of the accused turning machines and components thereof. He has also certified the evidentiary record to the Commission for its consideration. Interested persons may obtain copies of the presiding officer's recommendation (and all other public documents) by contacting the Office of the Secretary to the Commission, 701 E Street NW., Washington, D.C. 20436.

COMMISSION HEARING: The Commission will hold a hearing beginning at 10 a.m., e.d.t., on September 26, 1980, in the Commission's hearing room (room 331), 701 E Street NW., Washington, D.C. 20436, for two purposes. First, the Commission will hear oral argument on the presiding officer's recommendation that a violation of section 337 of the Tariff Act of 1930, as amended, exists. Second, the Commission will hear presentations concerning appropriate relief, the way such relief would affect the public interest and the proper amount of the bond during the Presidential review period, in the event that the Commission determines that there is a violation of section 337. These matters will be heard on the same day in order to facilitate the completion of this investigation within time limits established under law and to minimize the burden of this hearing upon the parties. The procedures for each portion of the hearing follow.

ORAL ARGUMENT: A party to the Commission's investigation or an interested agency wishing to present to the Commission an oral argument concerning the presiding officer's recommendation will be limited to no more than 30 minutes. A party or interested agency may reserve 10 minutes of its time for rebuttal. The oral arguments will be held in this order: complainants, respondents, interested agencies, and Commission investigative staff. Any rebuttals will be

held in this order: respondents, complainants, interested agencies, and Commission investigative staff.

Following the oral arguments on the presiding officer's recommendation, a party to the investigation, an interested agency, a public interest group, or any interested member of the public may make an oral presentation on relief, bonding, and the public interest.

RELIEF: If the Commission finds that a violation of section 337 has occurred, it may issue (1) an order which could result in the exclusion from entry of certain turning machines and components thereof or (2) an order which could result in requiring the respondent to cease and desist from alleged unfair methods of competition or unfair acts in the importation and sale of turning machines and components thereof. Accordingly, the Commission is interested in what relief, if any, should be ordered.

BONDING: If the Commission finds that a violation of section 337 has occurred and orders some form of relief, the President has up to 60 days to approve or disapprove the Commission's report. During this period the subject articles would be entitled to enter the United States under a bond determined by the Commission and prescribed by the Secretary of the Treasury. Accordingly, the Commission is interested in what bond, if any, should be assessed.

PUBLIC INTEREST: If the Commission concludes that a violation of section 337 has occurred and orders some form of relief, it must consider the effect of that relief upon the public. Accordingly, the Commission is interested in the effect of any exclusion or cease and desist order upon (1) the public health and welfare, (2) competitive conditions in the U.S. economy, (3) the production of like or directly competitive articles in the United States, and (4) U.S. consumers.

WRITTEN SUBMISSIONS: Parties to the Commission's investigation, interested agencies, and the Commission investigative staff are encouraged to file briefs on the issues of remedy, bonding and public interest in order to give greater focus to the questions. These briefs must be filed no later than the close of business September 19, 1980. The parties may be asked during the course of the hearing to file post-hearing briefs if necessary.

NOTICE OF APPEARANCE: Written requests to appear at the Commission hearing must be filed by September 19, 1980.

ADDITIONAL INFORMATION: The original and 19 true copies of all briefs and written comments and any written request to participate must be filed with the Secretary to the Commission. Any person desiring to discuss confidential information, or to submit a document

(or a portion thereof) to the Commission in confidence, must request in camera treatment unless the information has already been granted in camera treatment by the presiding officer. Such request should be directed to the Chairman of the Commission and must include a full statement of the reasons why the Commission should grant such treatment. Documents or arguments reflecting confidential information approved by the Commission for in camera treatment will be treated accordingly. All nonconfidential written submissions will be open to public inspection at the Secretary's Office. Notice of the Commission's investigation was published in the Federal Register of October 24, 1979.

By order of the Commission.

Issued: September 8, 1980.

KENNETH R. MASON,
Secretary.

701–TA–64 (Preliminary)

CERTAIN GLASS-LINED STEEL STORAGE TANKS AND GLASS-LINED STEEL PRESSURE VESSELS, AND PARTS THEREOF, FROM FRANCE

Notice of Institution of Preliminary Countervailing Duty Investigation and Scheduling of Conference

INVESTIGATION INSTITUTED: Following receipt of a petition on September 2, 1980, filed by the Pfaudler Co., Rochester, N.Y., a domestic producer of process and storage vessels for the chemical and pharmaceutical industries, the U.S. International Trade Commission on September 9, 1980, instituted a preliminary countervailing duty investigation under section 703 of the Tariff Act of 1930 to determine whether there is a reasonable indication that an industry in the United States is materially injured, or is threatened with material injury, or the establishment of an industry in the United States is materially retarded, by reason of allegedly subsidized imports from France of glass-lined steel storage tanks having a capacity of over 75 gallons provided for in item 640.35 of the Tariff Schedules of the United States (TSUS) and glass-lined steel pressure vessels and parts thereof provided for in item 661.68 of the TSUS. This investigation will be subject to the provisions of part 207 of the Commission's Rules of Practice and Procedure (19 CFR 207, 44 FR. 76457) and, particularly, subpart B thereof, effective January 1, 1980.

WRITTEN SUBMISSIONS: Any person may submit to the Commission on or before September 26, 1980, a written statement of information pertinent to the subject matter of the investigation. A signed original and 19 copies of each such statement must be submitted.

Any business information which a party desires to have treated as confidential must be submitted to the Commission separately, with the designation "Confidential Business Data" clearly marked at the top of each page. Confidential submissions must conform with the requirements of section 201.6 of the Commission's Rules of Practice and Procedure (19 CFR 201.6). All written submissions, except for confidential business data, will be available for public inspection.

CONFERENCE: In connection with the investigation the Director of Operations has scheduled a conference for 10 a.m., e.d.t., on September 24, 1980, at the U.S. International Trade Commission Building, 701 E Street NW., Washington, D.C. Parties wishing to participate in the conference should contact the senior investigator, Mr. Bruce Cates, 202-523-0368. The provisions for the conference restrict any oral presentations to one hour, collectively, for those parties in support of the petition for countervailing duties and another hour for parties opposed to such petition. Further details concerning the conduct of the conference may be obtained from Mr. Cates.

INSPECTION OF THE PETITION: The petition filed in this case is available for public inspection at the Office of the Secretary, U.S. International Trade Commission and at the New York City office of the U.S. International Trade Commission located at 6 World Trade Center.

Issued: September 10, 1980.

KENNETH R. MASON,
Secretary.

731-TA-31, -32, and -33 (Preliminary)

BARIUM CARBONATE AND STRONTIUM CARBONATE FROM THE FEDERAL REPUBLIC OF GERMANY AND STRONTIUM NITRATE FROM ITALY

Notice of Institution of Preliminary Antidumping Investigations and Scheduling of Conference

AGENCY: U.S. International Trade Commission.

ACTION: Institution of preliminary antidumping investigations to determine whether there is a reasonable indication that an industry in the United States is materially injured or is threatened with material injury, or the establishment of an industry is materially retarded, by reason of imports from the Federal Republic of Germany of precipitated barium carbonate and precipitated strontium carbonate, provided for in items 472.06 and 421.72, respectively, of the Tariff Schedules of the United States (TSUS), and imports from Italy of strontium nitrate,

provided for in TSUS item 421.74, which are allegedly being sold or likely to be sold at less than fair value.

EFFECTIVE DATE: September 9, 1980.

FOR FURTHER INFORMATION CONTACT: Miriam A. Bishop, investigator; 202-523-0291.

SUPPLEMENTARY INFORMATION:

BACKGROUND

These investigations are being instituted following receipt on September 9, 1980, of petitions filed by Leva, Hawes, Symington, Martin & Oppenheimer, Washington, D.C., on behalf of domestic producers of barium carbonate, strontium carbonate, and strontium nitrate.

AUTHORITY

Section 733(a) of the Tariff Act of 1930 (19 U.S.C. 1673b(a)) requires the Commission to make a determination of whether there is a reasonable indication that an industry in the United States is materially injured, or is threatened with material injury, or the establishment of an industry in the United States is materially retarded, by reason of imports alleged to be, or likely to be, sold in the United States at less than fair value. Such a determination must be made within 45 days after the date on which a petition is filed under section 732(b) or on which notice is received from the Department of Commerce of an investigation commenced under section 732(a). Accordingly, the Commission, effective September 9, 1980, instituted preliminary antidumping investigations Nos. 731-TA-31, -32, and -33. These investigations will be subject to the provisions of part 207 of the Commission's Rules of Practice and Prodedure (19 CFR 207, 44 F.R. 76457) and particularly, subpart B thereof.

WRITTEN SUBMISSIONS

Any person may submit to the Commission on or before October 8, 1980, a written statement of information pertinent to the subject matter of these investigations. A signed original and 19 copies of such statements must be submitted.

Any business information which a submitter desires the Commission, to treat as confidential shall be submitted separately and each sheet must be clearly marked at the top "Confidential Business Data." Confidential submissions must conform with the requirements of section 201.6 of the Commission's Rules of Practice and Procedure (19 CFR 201.6). All written submissions, except for confidential business data, will be available for public inspection.

CONFERENCE

The Director of Operations of the Commission has scheduled a conference in connection with these investigations for 10 a.m., e.d.t., on October 3, 1980, at the U.S. International Trade Commission Building, 701 E Street NW., Washington, D.C. Parties wishing to participate in the conference should contact the investigator for the investigation, Ms. Miriam A. Bishop, 202-523-0291. It is anticipated that parties in support of the petitions for antidumping duties and parties opposed to such petitions will each be collectively allocated one hour within which to make an oral presentation at the conference. Further details concerning the conduct of the conference will be provided by the investigator.

INSPECTION OF PETITION

The petitions filed in these cases are available for public inspection at the Office of the Secretary, U.S. International Trade Commission and at the New York City office of the U.S. International Trade Commission located at 6 World Trade Center.

By order of the Commission:

Issued: September 12, 1980.

KENNETH R. MASON,
Secretary.

Index

U.S. Customs Service

T.D. No.
Treasury decision: Daily rates for countries not on quarterly list..... 80-232

Court of Customs and Patent Appeals

Southwire Co. *v.* United States International Trade Commission, No. 79-25/31, Terminating portion of investigation under 19 U.S.C. 1337

Customs Court

Belgian steel beams; not less than fair value determination, C.R.D. 80-9
Confidential information; disclosure, C.R.D. 80-9
Disclosure; confidential information, C.R.D. 80-9
Discovery, motion to compel; memorandum, opinion and order, C.R.D. 80-9
Memorandum, opinion and order; discovery, motion to compel, C.R.D. 90-8
Motion to compel discovery, C.R.D. 80-9
Not less than fair value determination; Belgian steel beams, C.R.D. 80-9

Item 326-837 Item 950-D T 1.11/3:14/41
continue

Customs Bulletin

Regulations, Rulings, Decisions, and Notices concerning Customs and related matters

and Decisions

of the United States Court of Customs and Patent Appeals and the United States Customs Court

9247
C-37
H.H.

Vol. 14 | OCTOBER 8, 1980 | No. 41

This issue contains

T.D. 80–233 through 80–238
Proposed Rulemaking
C.D. 4872
C.R.D. 80-10 and 80-11
Protest abstracts P80/130 through P80/132
Reap. abstracts R80/278 through R80/283
Recent Unpublished Decisions
International Trade Commission Notices

THE DEPARTMENT OF THE TREASURY
U.S. Customs Service

Singapore dollar:	
September 8, 1980	$0.473373
September 9, 1980	.471809
September 10, 1980	.472032
September 11, 1980	.473037
September 12, 1980	.473485
Thailand baht (tical):	
September 8–12, 1980	$0.0488
Venezuela bolivar:	
September 8–12, 1980	$0.2329

(LIQ-3-01 O:C:E)

Dated: September 12, 1980.

NANCY I. BROWN,
Chief, Customs Information Exchange.

(T.D. 80-234)

Bonds

Approval and discontinuance of bonds on Customs form 7587 for the control of instruments of international traffic of a kind specified in section 10.41a of the Customs Regulations

Bonds on Customs form 7587 for the control of instruments of international traffic of a kind specified in section 10.41a of the Customs Regulations have been approved or discontinued as shown below. The symbol "D" indicates that the bond previously outstanding has been discontinued on the month, day, and year represented by the figures which follow. "PB" refers to a previous bond, dated as represented by the figures in parentheses immediately following which has been discontinued. If the previous bond was in the name of a different company or if the surety was different, the information is shown in a footnote at the end of the list.

Dated: September 18, 1980.

Name of principal and surety	Date of bond	Date of approval	Filed with district director/area director/amount
Acme Food Specialties, Inc., 1874 E. 22nd St., Los Angeles, CA; Washington International Ins. Co.	May 13, 1980	June 27, 1980	Los Angeles, CA $50,000
CATU Containers S.A., 9 Rue Boissonnas, CH-1227, Geneva, Switzerland; Washington Int'l Ins. Co. D 8/26/80	July 3, 1978	July 14, 1978	San Francisco, CA $20,000
The Flying Tiger Line, Inc., 7401 World Way West, Los Angeles, CA; St. Paul Fire & Marine Ins. Co.	May 14, 1980	Aug. 21, 1980	Los Angeles, CA $50,000

Name of principal and surety	Date of bond	Date of approval	Filed with district director/area director/amount
Leopoldo Fontanillas, Inc., Municipal Pier, Ponce, PR; Puerto Rican American Ins. Co.	May 13, 1977	July 7, 1980	San Juan, PR $10,000
Harper Shipping Co., 545 Sansome St., San Francisco, CA; Old Republic Ins. Co. D 8/26/80	June 27, 1979	July 23, 1979	San Francisco, CA $10,000
The H. J. Hosea and Sons Co., Port Hosea, P.O. Box 398, Newport (Cincinnati) Kentucky; The Ohio Casualty Ins. Co. D 6/20/80	Apr. 3, 1978	July 6, 1978	Cleveland, OH $30,000
George Moroz & Associates, Box 5824, San Juan, PR; St. Paul Fire & Marine Ins. Co.	Aug. 5, 1980	Aug. 11, 1980	San Juan, PR $10,000
Nauru Air and Shipping Agency of Honolulu, 900 Fort St., Suite 1090, Honolulu, HI; St. Paul Fire & Marine Ins. Co.	Aug. 29, 1980	Sept. 2, 1980	Honolulu, HI $30,000
Overseas Enterprises, Inc., 1 World Trade Center, NY, NY; American Casualty Co. of Reading, Pa	Aug. 5, 1980	Aug. 5, 1980	New York, New York $10,000
Saccone & Speed (USA) Inc., 3 Park Plaza, Old Brookville, NY; St. Paul Fire & Marine Ins. Co. D 8/8/80	Feb. 24, 1978	Feb. 24, 1978	New York Seaport $10,000
Seaway Express Lines, 444 W. Ocean Blvd., Suite 1200, Long Beach, CA; Washington International Ins. Co. D 8/25/80	Aug. 9, 1978	Aug. 31, 1978	Los Angeles, CA $50,000
Sovereign Import Co., 3 Park Plaza, Old Brookville, NY; St. Paul Fire & Marine Ins. Co.	Aug. 8, 1980	Aug. 8, 1980	New York, NY $10,000

BON-3-10

ALFRED G. SCHOLLE,
Director,
Carriers, Drawback and Bonds Division.

(T.D. 80-235)

Manmade Fiber Textile Products—Restriction on Entry

Restriction on entry of manmade fiber textile products manufactured or produced in Taiwan

There is published below a directive of August 11, 1980, received by the Commissioner of Customs from the acting chairman, Committee for the Implementation of Textile Agreements, concerning restriction on entry of manmade fiber textile products in category 669 and 669 pt. manufactured or produced in Taiwan. This directive

amends, but does not cancel, that committee's directive of December 21, 1979 (T.D. 80–66).

This directive was published in the Federal Register on August 14, 1980 (45 F.R. 54121), by the committee.

(QUO–2–1)

Dated August, 30, 1980.

WILLIAM D. SLYNE
(For Richard R. Rosettie, Acting
Director, Duty Assessment Division).

U.S. DEPARTMENT OF COMMERCE,
INTERNATIONAL TRADE ADMINISTRATION,
Washington, D.C., August 11, 1980.

Committee for the Implementation of Textile Agreements

COMMISSIONER OF CUSTOMS,
Department of the Treasury,
Washington, D.C.

DEAR MR. COMMISSIONER: This directive further amends, but does not cancel, the directive of December 21, 1979, from the chairman of the Committee for the Implementation of Textile Agreements which directed you to prohibit, effective on January 1, 1980, and for the 12-month period extending through December 31, 1980, entry into the United States for consumption, and withdrawal from warehouse for consumption, of cotton, wool, and manmade fiber textile products in certain designated categories.

Under the terms of the Arrangement Regarding International Trade in Textiles done at Geneva on December 20, 1973, as extended on December 15, 1977; pursuant to the Bilateral Agreement of June 8, 1978, as amended, concerning cotton, wool, and manmade fiber textile products exported from Taiwan; and in accordance with the provisions of Executive Order 11651 of March 3, 1972, as amended by Executive Order 11951 of January 6, 1977, you are directed, effective on August 15, 1980, to cancel the import controls established in the directive of December 21, 1979, for category 669 and 669 pt. (only TSUSA 355.4560).

The action taken with respect to Taiwan and with respect to imports of manmade fiber textile products from Taiwan has been determined by the Committee for the Implementation of Textile Agreements to involve foreign affairs functions of the United States. Therefore, these directions to the Commissioner of Customs, which are necessary to the implementation of such actions, fall within the

foreign affairs exception to the rulemaking provisions of 5 U.S.C. 553. This letter will be published in the Federal Register.

Sincerely,

ARTHUR GAREL,
Acting Chairman, Committee for the Implementation of Textile Agreements.

(T.D. 80-236)

Customs Relations with Canada and Mexico

Section 123.9, Customs Regulations, relating to discrepancies in manifests of vehicles and certain vessels arriving from Canada or Mexico, amended

TITLE 19—CUSTOMS DUTIES

CHAPTER I—U.S. CUSTOMS SERVICE

PART 123—CUSTOMS RELATIONS WITH CANADA AND MEXICO

AGENCY: U.S. Customs Service, Department of the Treasury.

ACTION: Final rule.

SUMMARY: This document amends the Customs Regulations to establish uniform procedures for handling discrepancies in the manifests of vehicles and certain vessels arriving from Canada or Mexico. The amendment provides instructions for the public and Customs officers to insure uniform treatment of cases involving discrepancies in the manifests of the vehicles and vessels to which the amendment applies.

EFFECTIVE DATE: 30 days after publication in the Federal Register.

FOR FURTHER INFORMATION CONTACT: Donald H. Reusch, Carriers, Drawback and Bonds Division, U.S. Customs Service, 1301 Constitution Avenue NW., Washington, D.C. 20229; 202-566-5706.

SUPPLEMENTARY INFORMATION:

BACKGROUND

A notice published in the Federal Register on July 28, 1978 (43 F.R. 32817), proposed to amend section 123.9, Customs Regulations (19 CFR 123.9), relating to discrepancies in the manifests of vehicles

arriving from Canada or Mexico and of vessels of less than 5 net tons arriving from those countries otherwise than by sea. Section 123.3 requires such vehicles and vessels to file a correct manifest with Customs on arrival in the United States.

PROPOSED AMENDMENT

1. It was proposed to change the heading of section 123.9 from "Correction of manifest" to "Explanation of a discrepancy in the manifest" to avoid the implication that filing a Discrepancy Report and Declaration, Customs Form 5931, to correct a manifest discrepancy necessarily relieves a violator from any penalty which may have been incurred as a result of the discrepancy.

2. It also was proposed to delete the citation to section 440, Tariff Act of 1930, as amended (19 U.S.C. 1440), which prescribes a penalty for failure to correct a manifest by post entry, because that section does not apply to vehicles, or to vessels of less than 5 net tons arriving otherwise than by sea, from a contiguous country. The proposal provided that penalties would be assessed under section 460, Tariff Act of 1930, as amended (19 U.S.C. 1460), if a manifest is not filed, or if it fails to include all the merchandise imported or brought into the United States on a vehicle, or on a vessel of less than 5 net tons arriving otherwise than by sea, from a contiguous country (an overage). A penalty would be assessed under section 584, Tariff Act of 1930, as amended (19 U.S.C. 1584), if a manifest lists merchandise not found on board (a shortage).

3. The proposal also established procedures for reporting manifest discrepancies to Customs and guidelines for determining whether to assess a penalty under 19 U.S.C. 1584, and provided for the remission or mitigation of a penalty assessed under 19 U.S.C. 1460. Instructions also were provided for determining the amount of any penalty to be assessed under those statutes.

Written comments on the proposed amendment were invited from interested persons, to be received on or before August 28, 1978. No public comments were received. With the exception of the revisions described below, this final rule adopts the amendment as proposed.

CHANGES TO THE PROPOSED AMENDMENT

1. Proposed section 123. 9 (a)(1) has been revised to insert the words "to a penalty" before "equal". The words were omitted inadvertently from the proposed rule as published.

2. Public Law 95–410, approved October 3, 1978 (after publication of the proposed rule), amended 19 U.S.C. 1584 by extending liability

for any discrepancy between the merchandise and manifest to include "any person directly or indirectly responsible for any discrepancy". Proposed sections 123.9(a)(2), (b)(1), (b)(2), (c), and (d) have been revised to conform to the new statutory language.

3. Proposed section 123.9(b)(1) has been revised to add the owner of a vessel or vehicle to the parties who must report manifest discrepancies to the district director within 60 days after the date of arrival, and the heading of that proposed section has been revised to conform to the text. The responsibility of the owner to report manifest discrepancies was referred to in other paragraphs of proposed section 123.9 but was omitted inadvertently from proposed section 123.9(b)(1).

4. Proposed section 123.9(b)(2) has been revised to clarify that the district director may notify the master, person in charge, owner, agent, or any other person directly or indirectly responsible, of any discrepancy discovered by Customs officers not reported by any of those persons by furnishing that person a copy of Customs Form 5931, Discrepancy Report and Declaration, or by any other appropriate written means. Use by the District Director of Customs form 5931 for this purpose shall not preclude the assessment of any penalty or liability to forfeiture otherwise incurred.

5. Section 618, Tariff Act of 1930, as amended (19 U.S.C. 1618), provides that a fine, penalty, or forfeiture may be remitted or mitigated by the Secretary of the Treasury if he finds that the fine, penalty, or forfeiture was incurred without willful negligence or without any intention on the part of the petitioner to defraud the revenue or violate the law, or if he finds the existence of such mitigating circumstances as to justify remission or mitigation. Proposed section 123.9(d) has been revised to state that a penalty or forfeiture incurred under 19 U.S.C. 1460 or 19 U.S.C. 1584 may be remitted or mitigated in accordance with 19 U.S.C. 1618.

INAPPLICABILITY OF EXECUTIVE ORDER 12044

This document is not subject to the Treasury Department directive implementing Executive Order 12044, Improving Government Regulations, because the regulation was in process before May 22, 1978, the effective date of the directive.

DRAFTING INFORMATION

The principal author of this document was Laurie Strassberg Amster, Regulations and Research Division, Office of Regulations and Rulings, U.S. Customs Service. However, personnel from other Customs offices participated in its development.

328-837 O - 80 - 2

AMENDMENT TO THE REGULATIONS

PART 123—CUSTOMS RELATIONS WITH CANADA AND MEXICO

Section 123.9, Customs Regulations (19 CFR 123.9), is amended to read as follows:

123.9 Explanation of a discrepancy in a manifest.

(a) *Provisions applicable.*

(1) *Failure to file a manifest; overages.*—If there is a failure to file a manifest in accordance with section 123.5, or if merchandise is found that is not listed on a manifest filed in accordance with that section (an overage), the merchandise and the vessel or vehicle in which it was brought or imported into the United States are subject to forfeiture, and the master of the vessel or the person in charge of the vehicle is liable, in addition to any other penalty, to a penalty equal to the value of the merchandise, under section 460, Tariff Act of 1930, as amended (19 U.S.C. 1460).

(2) *Shortages.*—If merchandise is manifested but not found on board (a shortage), the master, person in charge, owner, or agent of the vessel or vehicle, or any person directly or indirectly responsible for the discrepancy between the merchandise and manifest, shall be subject to a penalty of $500 under section 584, Tariff Act of 1930, as amended (19 U.S.C. 1584).

(b) *Report of discrepancies.*

(1) *Discrepancies discovered by master, person in charge, owner, agent, or person directly or indirectly responsible.*—The master, person in charge, owner, or agent of the vessel or vehicle, or any person directly or indirectly responsible for any discrepancy between the merchandise and the manifest, shall report any discrepancy to the District Director within 60 days after the date of arrival by completing a report for an overage or a declaration for a shortage. The overage report or shortage declaration may be made on the appropriate manifest form, as listed in section 123.4, or on Customs Form 5931, Discrepancy Report and Declaration. If no manifest had been filed, an original copy of the appropriate form, as listed in section 123.4, should be used. In each case in which a manifest form is used, the form shall be marked or stamped "Overage report" or "Shortage declaration", as appropriate. The form used shall list the merchandise involved and state the reasons for the discrepancy.

(2) *Discrepancies discovered by Customs.*—The District Director immediately shall advise the master, person in charge, owner, agent, or any person directly or indirectly responsible for the discrepancy between the merchandise and the manifest of any discrepancy discovered by Customs officers which has not been reported. The person so notified shall file an explanation of the discrepancy, as required by paragraph (b)(1) of this section, within 30 days of notification, or within 60 days after arrival of the vessel or vehicle, whichever is later. The District Director may notify the master, person in charge, owner, agent, or any person directly or indirectly responsible for the discrepancy by furnishing a copy of Customs form 5931 to that

persons, or by any other appropriate written means. Use of Customs, form 5931 shall not preclude assessment of any penalty or liability to forfeiture otherwise incurred.

(c) *Statement on report of discrepancy required.*—The overage report or shortage declaration shall bear the following statement signed by the master of the vessel, the person in charge of the vehicle, the owner of the vessel or vehicle, an authorized agent, or the person directly or indirectly responsible for the discrepancy:

> I declare to the best of my knowledge and belief that the discrepancy described herein occurred for the reasons stated. I also certify that evidence to support a claim of nonimportation or proper disposition of merchandise will be retained in the carrier's files for a period of at least 1 year from the date of this report of discrepancy and will be made available to Customs upon demand.

(d) *Action on the discrepancy report.*

(1) In accordance with the proviso to 19 U.S.C. 1584, no penalty shall be incurred under that section if—

(i) The manifest discrepancy relates only to a shortage;

(ii) There is timely filing of the discrepancy report;

(iii) There has been no loss of revenue;

(iv) The District Director is satisfied that the discrepancy resulted from clerical error or other mistake; and

(v) In the case of a discrepancy not reported initially by the master, person in charge, owner, agent, or the person directly or indirectly responsible, the District Director is satisfied that there is a valid reason for failure to file the discrepancy report.

(2) If the criteria in paragraph (d)(1) are not met, applicable penalties under 19 U.S.C. 1460 or 19 U.S.C. 1584 shall be assessed, and the vessel or vehicle shall be liable to forfeiture under 19 U.S.C. 1460 (see sec. 162.31 of this chapter).

(3) Any penalty or liability to forfeiture incurred under 19 U.S.C. 1460 or 19 U.S.C. 1584 may be mitigated or remitted under section 618, Tariff Act of 1930, as amended (19 U.S.C. 1618).

(e) *Penalty assessment.*—For the purpose of assessing penalties under 19 U.S.C. 1460 or 19 U.S.C. 1584, the value of the merchandise shall be determined as described in section 162.43 of this chapter.

(f) *Lack of knowledge does not relieve liability.*—The fact that the master of the vessel, the person in charge of the vehicle, or the owner of the vessel or vehicle had no knowledge of a discrepancy shall not relieve the master, the person in charge, or the owner from a penalty, or the vessel or vehicle from liability to forfeiture, incurred under 19 U.S.C. 1460 or 1584.

(g) *Clerical error or other mistake defined.*—For the purpose of this section, the term "clerical error or other mistake" is defined as a nonnegligent, inadvertent, or typographical mistake in the preparation, assembly, or submission of manifests. However, repeated similar manifest discrepancies by the same persons may

be considered the result of negligence and not clerical error or other mistake.

(R.S. 251, as amended, sec. 624, 46 Stat. 759 (19 U.S.C. 66, 1624).)

WILLIAM T. ARCHEY,
Acting Commissioner of Customs.

Approved: September 17, 1980.

RICHARD J. DAVIS,
Assistant Secretary of the Treasury.

[Published in the Federal Register, Sept. 29, 1980 (45 F.R. 64172)]

(T.D. 80-237)

Vessels in Foreign and Domestic Trades—Customs Regulations Amended

Sections 4.7 and 4.14, Customs Regulations, relating to foreign repairs to, and equipment purchases by, American vessels, amended

TITLE 19—CUSTOMS DUTIES

CHAPTER I—U.S. CUSTOMS SERVICE

PART 4—VESSELS IN FOREIGN AND DOMESTIC TRADES

AGENCY: U.S. Customs Service, Department of the Treasury.

ACTION: Final rule.

SUMMARY: This document amends the Customs Regulations to clarify and make more specific the procedures for the reporting and entry of foreign repairs to, and equipment purchases by, American vessels, and makes conforming amendments to take account of a consolidation of the Customs forms used in the reporting and entry procedures. The document also provides that vessel repair and equipment purchase entries shall be liquidated in New York, New Orleans, and San Francisco depending upon the port where the entry was made.

EFFECTIVE DATE: 60 days from the date of publication in the Federal Register.

FOR FURTHER INFORMATION CONTACT: Jerry C. Laderberg, Carrier Rulings Branch, Office of Regulations and Rulings, U.S. Customs Service, Washington, D.C. 20229; 202-566-5706.

SUPPLEMENTARY INFORMATION:

BACKGROUND

The owner or master of an American vessel is required by section 466, Tariff Act of 1930, as amended (19 U.S.C. 1466), to declare,

enter, and pay a special 50-percent duty on the cost of all repairs (including purchases of equipment, repair parts, or materials) made to the vessel outside the United States. Section 466 also provides for remission of the duty if (1) the repairs or purchases were necessary to correct damage caused by stress of weather or other casualty while the vessel was in the regular course of its voyage and to secure the safety and seaworthiness of the vessel to enable it to reach its port of destination; (2) the equipment, repair parts, or materials purchased were of American origin and installed by the vessel's crew or U.S. residents; or (3) the equipment, repair parts, or materials purchased, including the labor cost involved, were used as dunnage for cargo, or for the erection of temporary bulkheads or similar devices for the control of cargo.

Section 466 also provides that in the case of any vessel designed and used primarily for purposes other than transporting passengers or property in the foreign or coasting trade (a so-called "special purpose vessel") which arrives in the United States 2 years or more after its last departure from a U.S. port, the duties shall apply only with respect to fish nets and netting and other equipment, and parts thereof, whenever purchased, and to repair parts and materials purchased, or repairs made, during the first 6 months after the last departure of the vessel from the United States.

A notice published in the Federal Register on April 4, 1978 (43 F.R. 14060), proposed to amend sections 4.7 and 4.14, Customs Regulations (19 CFR 4.7, 4.14), which relate to reporting and entry procedures established to implement 19 U.S.C. 1466. Written comments were to have been received by May 4, 1978. However, at the request of American-flag vessel operators, a notice extending the comment period to June 2, 1978, was published on May 5, 1978 (43 F.R. 19417), and pursuant to another request, by notice published on May 19, 1978 (43 F.R. 21693), the comment period was further extended to June 30, 1978. A discussion of the proposed amendments, the substance of each of the 26 comments received, and Customs position on each comment follows:

DISCUSSION OF COMMENTS—REQUIREMENT THAT EITHER THE MASTER OR OWNER MAKE THE DECLARATION

Several commenters supported the proposed amendment to section 4.7(d)(1) to permit either the master or the owner of a vessel subject to the provisions of 19 U.S.C. 1466 to declare the purchase of any equipment, repair parts, or materials, or the cost of any repairs, in a foreign country for the vessel. One commenter recommended that the vessel master be freed from any requirement for reporting this data,

Under 19 U.S.C. 1466, the owner or the master is permitted to

make the required declaration. Customs does not have the authority to relieve the master of this responsibility. However, the amendment would enable the owner to relieve the master of the responsibility and to delegate that responsibility to some other person.

DUTIABILITY OF FOREIGN REPAIRS AND EQUIPMENT PURCHASES APPLICABILITY OF STATUTE

Proposed section 4.14(a)(1) would incorporate a revision of footnote 26 to part 4 (also referred to in footnote 16b to part 4) to provide that: "For the purposes of this section, a repair or purchase made in American Samoa, the Canal Zone, the Guantanamo Bay Naval Station, Guam, Puerto Rico, and the U.S. Virgin Islands is not considered to be incurred outside the United States". One commenter suggested that Customs should except fish nets or netting from this section, and contended that the proposed revision is contrary to the intent of the 1971 amendment to 19 U.S.C. 1466 (Public Law 91–654).

Public Law 91–654 added paragraph (c) to 19 U.S.C. 1466 and excepted fish nets and netting from the exemption from duty on purchases of equipment for, and foreign repairs to, "special purpose vessels" in certain circumstances. The amendment did not relate to Customs position that certain U.S. territories and possessions and the Commonwealth of Puerto Rico are not considered foreign countries for purposes of 19 U.S.C. 1466.

American Samoa, the Guantanamo Bay Naval Station, Guam, Puerto Rico, and the U.S. Virgin Islands are subject to the jurisdiction of the United States. Therefore, none is considered to be a foreign country within the meaning of 19 U.S.C. 1466. Accordingly, the last sentence of proposed section 4.14(a)(1) is retained in the final rule except that the reference to the Canal Zone is deleted.

Footnote 26 to part 4, which is incorporated into proposed section 4.14(a)(1), was revised to remove the reference to the Canal Zone by T.D. 79–276, published in the Federal Register on October 29, 1979 (44 F.R. 61954), because the Canal Zone was transferred to Panama effective October 1, 1979, by the Panama Canal Treaty of 1977.

Footnote 26 to part 4 accordingly is deleted, and to conform to the deletion, footnote 16^b to part 4 is revised to read "16^b see section 4.14(a)(1)."

"SPECIAL PURPOSE VESSELS"

1. One commenter stated that the proposed amendments fail to provide for "special purpose vessels".

The term "special purpose vessel" is defined in proposed section 4.14(a)(2)(iii), and the dutiability of foreign repairs to, and equipment purchases for, "special purpose vessels" is set forth in that section.

2. Another commenter suggested that the definition of "special purpose vessels" be expanded to encompass more fully support vessels used in the offshore oil industry and to conform to the legislative intent of 19 U.S.C. 1466(c) (redesignated as 1466(e), pursuant to Public Law 95–410). This commenter recommended that the interpretation of the term "special purpose vessel" be clarified through administrative guidelines issued to the liquidation units.

Customs believes that the definition of "special purpose vessel" in proposed section 4.14(a)(2)(iii) is fully consistent with the legislative intent of 19 U.S.C. 1466(e) and requires no change.

3. A commenter recommended that the requirement in proposed section 4.14(a)(iii) that the master or owner of a "special purpose vessel" declare and enter all repairs and equipment purchases be modified to require only the declaration and entry of repairs and purchases made during the first 6 months of the vessel's voyage. The reason stated for this recommendation is that under 19 U.S.C. 1466(e), only the repairs and equipment purchases made during the first 6 months after the vessel's last departure from the United States on a voyage of 2 years or more are dutiable.

This comment has merit. Therefore, proposed section 4.14(a)(2)(iii) has been revised to provide that if the vessel previously has been held to be a "special purpose vessel" by Customs, only those items (with the exception of fish nets and netting) purchased, and repairs made, outside the United States during the first 6 months after the vessel's last departure from the United States on a voyage of at least 2 years' duration are required to be declared and entered. A copy of the applicable Customs ruling and a certification from the owner or master that the vessel was used during its last voyage primarily for purposes other than transporting passengers or merchandise are required to be furnished with the declaration and entry.

DEPOSIT OF ESTIMATED DUTIES OR FILING BOND BEFORE VESSEL DEPARTURE

1. Several commenters suggested that proposed section 4.14(b)(1), which would require estimated duties to be deposited, or a bond on Customs form 7567 or 7569 to be filed, before the departure of a vessel from the port of arrival, be modified to provide that the bonding provisions apply only to the net dutiable amount, rather than to the gross dutiable amount. These commenters contended that the requirement of a bond for the gross dutiable amount results in a substantial bond premium on items that clearly are nondutiable.

Proposed section 4.14(b)(1) does not require that the bond must be taken on the gross dutiable amount. Section 113.14(m), Customs

Regulations (19 CFR 113.14(m)), provides that Customs form 7567 or 7569, the single entry and term versions of the Vessel, Vehicle, or Aircraft Bond, may be taken in any amount deemed necessary by the District Director. To avoid any misunderstanding, a sentence is being added at the end of proposed section 4.14(b)(1) to clarify that the bond shall be in an amount required by the District Director, as provided in section 113.14(m).

2. One commenter claimed that proposed section 4.14(b)(1), in requiring estimated duties to be deposited, or a bond on Customs form 7567 or 7569 to be filed, before the departure of a vessel, effects a change in the current procedure of determining estimated duty on the basis of information submitted on Customs form 7535 (now Customs form 226) within 2 working days after arrival at the first U.S. port. This commenter recommended that the current procedure be incorporated into proposed section 4.14(b)(1) to prevent any delay in departure of the vessel from the port of arrival.

Proposed section 4.14(b)(1) does not change the current procedure for determining estimated duties. Both the current procedure and the proposed section provide that if the vessel clears port before filing an entry on Customs form 226, the bond or estimated duties shall be computed on the basis of information on the declaration submitted on Customs form 226.

TIME FOR SUBMITTING COST EVIDENCE

Many commenters were concerned that the time period provided in proposed section 4.14(b)(2)(ii) for submitting evidence of cost is inadequate. Several viewed the proposal as a reduction in the amount of time currently allowed for the submission of this evidence.

Present section 4.14(d) provides no time limitation on the submission of proper evidence of cost. Proposed section 4.14(b)(2)(ii) provides for a 60-day period from the date of the vessel's arrival within which to submit evidence of cost of each item listed on the repair entry. An additional 30-day extension may be granted to the applicant by the appropriate vessel repair liquidation unit upon request, and further requests for extensions of time may be granted by Customs Headquarters. There is no absolute limit on the amount of time that may be granted to an applicant for submission of evidence of cost.

REMISSION OR REFUND OF DUTY

Two commenters noted that the paragraph in proposed section 4.14 titled "Remission or refund of duty" is incorrectly designated with an upper case letter C instead of a lower case letter c. The paragraph has been redesignated accordingly.

VESSEL REPAIR LIQUIDATION UNITS

Almost all commenters objected to the proposal in section 4.14(c)(1) to centralize all vessel repair liquidation in two units located in Customs region II (New York) and region VIII (San Francisco). These commenters noted that much of the American shipping industry is concentrated in the Gulf of Mexico, and suggested that the absence of a vessel repair liquidation unit in this area would cause undue expenses and delays and reduce the industry's ability to communicate effectively with Customs. Many commenters specifically requested that a liquidation unit be located in region V (New Orleans).

Customs believes this point is well taken. Accordingly, proposed section 4.14(c)(1) has been revised to establish three vessel repair liquidation units, under the supervision of the respective regional commissioners, in region II, to process entries made in regions I (Boston), II (New York), III (Baltimore), and IX (Chicago); region V, to process entries made in regions IV (Miami), V (New Orleans), and VI (Houston); and region VIII, to process entries made in regions VII (Los Angeles) and VIII (San Francisco).

AUTHORITY TO APPROVE OF DENY APPLICATIONS FOR RELIEF

A number of commenters were concerned with proposed section 4.14(c)(2), which authorizes the regional commissioner in the regions in which liquidation units are established to approve or deny applications for relief from duties assessed on vessel repair entries only if a clearly applicable precedent for a decision exists and any remission or refund of duty as a result of the decision is less than $1,000. All other applications for relief would be referred to Customs Headquarters. These commenters suggested that the $1,000 ceiling on remission or refund of duty for this purpose be increased to enable more applications to be decided at the regional level. Two commenters believed that this ceiling should be raised to $10,000.

The primary purpose of proposed section 4.14(c)(2) is to achieve a more consistent method of rendering decisions in vessel repair cases and to eliminate the time consuming and costly consideration of relatively minor cases at Customs Headquarters. Raising the $1,000 ceiling to $10,000 would preclude a central review of major issues. However, in view of the increased costs of vessel repairs and equipment, Customs has decided to raise the $1,000 ceiling to $2,500. Consideration may be given to further raising the ceiling at a later time if experience under the proposed procedure warrants doing so.

STRESS OF WEATHER OR OTHER CASUALTY AS A BASIS FOR REMISSION OR REFUND OF DUTIES

1. Several commenters objected to proposed section 4.14(c)(3)(i), concerning the remission or refund of duty on foreign equipment pur-

328-837 O - 80 - 3

chased, or repairs made, outside the United States as a result of stress of weather or other casualty and necessary to secure the seaworthiness of the vessel to enable it to reach its port of destination in the United States.

A number of commenters objected to the proposal that only the duty on the cost of minimal repairs needed for the safety and seaworthiness of the vessel is subject to remission or refund. One commenter contended that the requirement that only minimal repairs be considered for remission or refund introduces a subjective element into the processing of repair entries. Another commenter claimed that this requirement would force owners to accomplish only minimal repairs overseas and to return their vessels to the United States in an unseaworthy condition. This commenter stated that vessels that returned to the United States in an unseaworthy condition would violate U.S. Coast Guard and classification society requirements and may cause the vessels to lose insurance coverage. Another commenter suggested that the term "minimal repairs" either be removed from the proposal or be defined to include such purchases or repairs as are necessary to allow a vessel to continue on its intended voyage with full operational capabilities.

Based upon the legislative history of 19 U.S.C. 1466(d)(1), Customs believes that only the duty on the cost of minimal repairs needed for the safety and seaworthiness of the vessel is subject to remission or refund. This proposal does not force owners to return their vessels to the United States in an unseaworthy condition and Customs has no authority to insert the Coast Guard and classification society requirements into the regulations. The term "minimal repairs" has been interpreted in administrative rulings and court cases to determine the extent to which remission may be granted, and Customs is of the opinion that no broader definition of this term is necessary.

2. Some commenters took issue with the interpretation of the term "casualty" in proposed section 4.14(c)(3)(i). As defined, "casualty" does not include any purchases or repairs necessitated by ordinary wear and tear, but does include a part's failure to function if satisfactory evidence shows that the specific part was repaired or serviced immediately before starting the voyage from the United States and that the part failed to function within 6 months of this repair or servicing.

Two commenters argued that Customs should recognize that a "casualty" is the result and not the cause of an emergency at sea. One of these commenters proposed that section 4.14(c)(3)(i) provide for the refund or remission of duty on repairs or equipment replacement resulting from any casualty (other than one caused by ordinary wear and tear) which so affects the safety of the vessel that without these

repairs or replacements it would not be able to safely complete the voyage. Alternatively, this commenter stated that if the term "casualty" is defined to refer to the cause and not the result of an emergency, Customs should specify those causes which render foreign vessel repairs or equipment purchases duty-free. The commenter recommended the adoption of the exceptions from liability set forth in section 4(2) of the Carriage of Goods by Sea Act (46 U.S.C. 1304(2)).

The interpretation of the term "casualty" has been the subject of numerous headquarters administrative rulings. Customs has considered carefully these suggestions and does not believe a change in its interpretation of the scope of the term "casualty" is appropriate.

3. One commenter contended that the 6-month period limiting remission of duty should be extended to 3 years to allow defects in a newly repaired propulsion system to surface. This commenter also argued that Customs should not condition the remission of duty for foreign repair or service upon the repair or service of the part immediately before starting the voyage from the United States because this forces the owner to examine all the ship's gear before each foreign voyage. Two commenters contended that the repair of vital electronic navigation devices should be free of duty except for failure due to ordinary wear and tear.

Proposed section 4.14(c)(3)(i) is intended merely to relieve the vessel owner or master from liability for duty on repairs or equipment purchases required for a part which was repaired or serviced immediately before starting a foreign voyage and which failed to function within 6 months of that repair or servicing. This proposal is not intended to force vessel owners to examine all the ship's gear before each foreign voyage, and it would not be feasible to broaden this rule simply to allow latent defects in specific parts to surface.

4. One commenter suggested that proposed section 4.14(c)(3)(i) be modified to take into account the features of liquified natural gas vessel operations. The commenter suggested that the term "casualty" include a part's failure to function if satisfactory evidence shows that the part was repaired or serviced immediately before starting a voyage from the United States and that the part failed to function within 6 months of such repair or service, inrrespective of the fact that the vessel had an intervening call or calls at U.S. ports during this 6-month period.

This suggestion would broaden the "one round voyage" rule set out in T.D. 71-83(38), which provides that it is reasonable to assume that a part of a vessel which has been repaired and/or serviced just before commencement of a voyage from the United States is seaworthy for a round-trip voyage and return, and failure of that part to function within 6 months after its repair in the United States may be

considered a casualty within the meaning of 19 U.S.C. 258(1) (now 19 U.S.C. 1466(d)(1)). Customs does not believe a further extension of this rule is appropriate.

5. A commenter argued that proposed section 4.14(c)(3)(i) should be modified to provide that all foreign repairs and equipment purchases required in order for American vessels to enter the United States in compliance with U.S. Coast Guard ports and waterways safety regulations shall be eligible for remission of duty. The commenter noted that under the Ports and Waterways Safety Act of 1972, Public Law 92–340, the Coast Guard has promulgated regulations (33 CFR part 164) which require liquified natural gas tankers to obtain Coast Guard certification of navigation and safety requirements as a condition of their entering a U.S. port. Accordingly, if a repair or equipment purchase is not due to a casualty, as defined in proposed section 4.14(c)(3)(i), the vessel is forced to make the repair or equipment purchase and incur the additional 50 percent duty to comply with the Coast Guard entrance requirements.

Customs recognizes the problem inherent in this situation. However, repairs or equipment purchases necessary to comply with Coast Guard or other governmental regulations are not subject to remission or refund of duty unless they otherwise qualify under 19 U.S.C. 1466(d).

U.S. PARTS AND EQUIPMENT INSTALLED WITH AMERICAN LABOR

1. Two commenters requested that proposed section 4.14(c)(3)(ii) be changed to clarify that the work performed by crew labor or by U.S. residents is nondutiable in accordance with 19 U.S.C. 1466(a). Because the nondutiability of the work performed by crew labor or by U.S. residents is provided for in 19 U.S.C. 1466(a), and these regulations are issued pursuant to 19 U.S.C. 1466(a), it is unnecessary to specify statutory authority in section 4.14(c)(3)(ii).

2. A number of commenters suggested that proposed section 4.14(c)(3)(ii) be amended to comply with T.D. 75–257 and provide that U.S.-origin equipment purchased in the United States by the vessel owner is nondutiable even if installed in a foreign shipyard.

T.D. 75–257 does not provide that U.S.-origin equipment purchased in the United States by the vessel owner is nondutiable even if installed in a foreign shipyard. However, upon a review of the background of T.D. 75–257 and subsequent rulings, Customs has decided that proposed section 4.14(c)(3)(ii) is overly broad. The proposed language has been changed to indicate that remission or refund of duty is authorized if good and sufficient evidence is furnished which shows that the equipment, equipment parts, repair parts, or materials used

on the vessel were manufactured or produced in the United States and purchased by the owner of the vessel in the United States, and the labor necessary to install such equipment or make such repairs was performed by residents of the United States or by members of the regular crew of the vessel.

PROCEDURE FOR REMISSION OR REFUND OF DUTIES—APPLICATION FOR RELIEF

One commenter claimed that the requirement in proposed section 4.14(d)(1)(i) of certification that all foreign equipment, parts, or materials purchased for, and all foreign repairs made to, the vessel on prior voyages have been declared complicates the procedure for remission or refund of duties. This commenter suggested that 19 U.S.C. 1466 is clear that these items must be reported, and there may be instances where the information is not available on arrival but will be available within the time allowed for filing a petition or on a later arrival.

The requirement of certification that all equipment or parts or materials and repairs made within 1 year immediately preceding the application have been duly accounted for is contained in 19 U.S.C. 1466(d). However, Customs recognizes that the certification contained in proposed section 4.14(d)(1)(i) is broader than the statutory requirement and therefore the section has been revised to conform to 19 U.S.C. 1466(d).

PLACE AND TIME OF FILING

Several commenters were concerned that the provision in proposed section 4.14(d)(1)(ii) for a 60-day period in which to file an application for relief, with a 30-day extension for good cause, is inadequate. One commenter recommended that this provision be modified to conform to proposed section 4.14(b)(2)(ii) and allow a further extension for filing the application for relief upon good cause.

Customs believes that it is not necessary to extend the period for filing the application for relief beyond the maximum period of 90 days. While the compilation of evidence of cost of repairs may require further extensions of time, the filing of an application for relief involves purely legal issues, and a 60-day period with a 30-day extension for good cause should be sufficient.

SUPPORTING EVIDENCE

1. Two commenters suggested that the requirement of certification by the master or other responsible party with personal knowledge of the facts relating to relief in proposed section 4.14(d)(1)(iii) should

be expanded to permit certification by the owner or any officer or representative of the owner knowledgeable of the facts. Another commenter requested that proposed section 4.14(d)(1)(iii) be revised to permit certification by a responsible party in the company in case of absence or nonavailability of shipboard personnel.

Customs believes that in order to ensure the veracity of evidence on the facts and circumstances surrounding the vessel repair or equipment purchase, it is necessary to require certification by the master or other responsible vessel officer with personal knowledge of the facts.

2. One commenter stated that the requirement in proposed section 4.14(d)(1)(iii)(E), for a certification by the master as to whether the repairs or equipment purchased were necessary for the safety and seaworthiness of the vessel to enable it to reach its port of destination in the United States, should be considered optional because of the provision in proposed section 4.14(d)(1)(iii)(C) requiring the submission of classification society reports requiring the repairs.

Customs believes that the responsibility and professional detachment required of a master of a vessel lends weight to a certification by that officer that is valuable in assessing the legitimacy of a claim for remission under the vessel repair statute. Customs does not believe that certification of this evidence by the master can be replaced with a classification society report.

3. A commenter suggested that proposed section 4.14(d)(1)(iii)(F) be expanded to permit the written description of the circumstances involved in the case of the use of American equipment, labor, and dunnage to be submitted over the signature of any responsible person in the company.

Customs believes that this suggestion would erode the quality of the documentary evidence submitted. However, proposed section 4.14(d)(1)(iii) has been revised to provide that the applicant may submit any additional documents in support of his application.

DOCUMENTARY EVIDENCE

One commenter objected to the requirement in proposed section 4.14(d)(1)(iv) that English translations for any documents written in a foreign language be certified for accuracy by the translator. This commenter stated that in view of the high costs of preparing verbatim translations, the certification by the translator should not be required and the current requirement that a translation be certified to be accurate should be sufficient.

Customs considers this objection to be without merit because it would be impossible to accept a translated document as evidence if it were not certified to be accurate by the translator.

LIQUIDATION OF VESSEL REPAIR ENTRIES—TIME LIMITS

One commenter suggested that the regulations provide that the entrant declare at the time of entry whether an application for relief will be filed, with a 60-day period in which to amend this declaration. The substance of this suggestion is incorporated in proposed section 4.14(e).

DOCUMENTED LASH BARGES

One commenter objected to the fact that the proposed regulations do not take documented Lighter-Aboard-Ship (Lash) barges into account. This commenter suggested that documented Lash barges are not subject to the duty imposed by 19 U.S.C. 1466, but that if the statute does apply, a different type of reporting system should be set up, allowing for a provisional entry at the time of arrival, with later supplemental reporting of repairs and equipment purchases.

The Customs Service has held in numerous decisions (see e.g., C.S.D. 79–3) that Lash barges are vessels subject to the provisions of 19 U.S.C. 1466. Customs believes that the extensions of time provided by section 4.14(b)(2)(ii) at the regional level and, when justified at headquarters, allow vessel operators sufficient time to obtain documentation and evidence of foreign repairs and equipment purchases and that a different type of reporting system for documented Lash barges is not necessary. To clarify this point, paragraph (a)(2)(iv) has been added to section 4.14(a) to state that foreign repairs to, and equipment purchases by, Lash barges are subject to declaration and entry.

CHANGE IN PENALTY PROVISIONS

To reflect the amendment of 19 U.S.C. 1466 by section 206 of Public Law 95–410, the "Customs Procedural Reform and Simplification Act, proposed section 4.14(g) has been revised to provide for the recovery from the owner of a monetary amount up to the value of the vessel as an alternative to seizure and forfeiture of the vessel in the event of a failure to report, make entry, and pay duties, as required.

EDITORIAL AND CONFORMING CHANGES

In accordance with the notice published in the Federal Register on March 21, 1979 (44 F.R. 17250), amendments have been made to sections 4.7 and 4.14, Customs Regulations, to provide for the use of Customs Form 226, Record of Vessel/Aircraft Foreign Repair or Equipment Purchase, in place of Customs Form 3415, Declaration of Foreign Repairs to Vessels or Aircraft, and Customs Form 7535,

Vessel/Aircraft Foreign Repair or Equipment Purchase Entry. A similar conforming change to section 6.7, Customs Regulations, was set forth in a proposed rule published in the Federal Register on January 8, 1980 (45 F.R. 1633). To further clarify certain sections of the proposed rule, other nonsubstantive editorial changes also have been made.

INAPPLICABILITY OF EXECUTIVE ORDER 12044

This document is not subject to the Treasury Department directive implementing Executive Order 12044, Improving Government Regulations, because the regulation was in process before May 22, 1978, the effective date of the directive

DRAFTING INFORMATION

The principal author of this document was Laurie Strassberg Amster, Regulations and Research Division, Office of Regulations and Rulings, U.S. Customs Service. However, personnel from other Customs offices participated in its development.

AMENDMENTS TO THE REGULATIONS

Part 4, Customs Regulations (19 CFR part 4), is amended as set forth below.

WILLIAM T. ARCHEY
(For Commissioner of Customs)

Approved: September 15, 1980.
RICHARD J. DAVIS,
Assistant Secretary of the Treasury.

[Published in the Federal Register, Sept. 30, 1980 (45 F.R. 64560)]

PART 4—VESSELS IN FOREIGN AND DOMESTIC TRADES

1. Footnote 16[b] is amended to read as follows: "16[b] See section 4.14(a)(1)."

2. Footnotes 26 and 27 are deleted.

3. Section 4.7(d)(1) is amended to read as follows:

4.7 Inward foreign manifest; production on demand; contents and form.

* * * * * * *

(d)(1) The master or owner of—

(i) A vessel documented under the laws of the United States to engage in the foreign or coasting trade, or intended to be employed in such trade, or

(ii) An American fishing vessel licensed or enrolled and

licensed for the fisheries which has a permit to touch and trade (see sec. 4.15), or an American fishing vessel documented for the fisheries which lacks a permit to touch and trade but which is intended to engage in trade, or a registered vessel which is intended to engage in the fisheries—

at the port of first arrival from a foreign country shall declare on Customs form 226 any equipment, repair parts, or materials purchased for the vessel, or any expense for repairs incurred, outside the United States, within the purview of section 466, Tariff Act of 1930, as amended (19 U.S.C. 1466). If no equipment, repair parts, or materials have been purchased, or repairs made, a declaration to that effect shall be made on Customs form 226.

4. Section 4.14 is amended to read as follows:

4.14 Foreign equipment purchases by, and repairs to, American vessels.

(a) *Dutiability of foreign repairs and equipment purchases.*

(1) *Items subject to duty.*—The equipments, or any part thereof, including boats, purchased for, or the repair parts or materials to be used, or the expenses for repairs made, including the cost of labor incurred, outside the United States, upon any vessel documented under the laws of the United States to engage in the foreign or coasting trade, or intended to be employed in such trade, are dutiable at the rate of 50 percent ad valorem on the actual cost in the country where the items are purchased or the repairs are made. Duty attaches at the time the repairs or purchases are made. Liability for declaration, entry, and payment of duties accrues at the time of the first arrival of the vessel in a port of the United States. For the purposes of this section, equipment, repair parts or materials purchased, or repairs made, in American Samoa, the Guantanamo Bay Naval Station, Guam, Puerto Rico, or the U.S. Virgin Islands are not considered to have been purchased or made outside the United States.

(2) *Dutiable costs on specific types of vessels.*

(i) *Fishing vessels.*—Vessels of the United States which are licensed or enrolled and licensed for the fisheries and have a permit to touch and trade (see sec. 4.15), vessels documented for the fisheries which lack a permit to touch and trade but which are intended to engage in trade, and registered vessels which are intended to engage in the fisheries, are subject to this section.

(ii) *Government-owned or chartered vessels.*—Vessels owned or chartered by the U.S. Government, if documented for, or intended to engage in, the foreign or coasting trade, are subject to this section. See paragraph (b)(2)(i) of this section with respect to entry procedures for Government vessels.

(iii) *Special purpose vessels.*

(A) *Defined.*—A vessel which is documented for the foreign or coasting trade, but is designed and used primarily for purposes other than transporting passengers or merchandise, is considered to be a special purpose vessel.

(B) *Requirements for declaration and entry.*—The owner or master of a special purpose vessel shall declare and enter all items purchased, or repairs made, outside the United States unless Customs previously has ruled the vessel is a special purpose vessel

328-837 O - 80 - 4

and the vessel arrives in a port of the United States 2 years or more after its last departure from a port of the United States. Under these circumstances, only those items (with the exception of fish nets and netting) purchased, and repairs made, outside the United States during the first 6 months after the vessel's last departure from the United States shall be declared and entered. Fish nets and netting purchased or repaired outside the United States shall be declared and entered whether or not purchased or repaired during the first 6 months after departure. A copy of the applicable Customs ruling and a certification from the owner or master that the vessel was used during its last voyage primarily for purposes other than transporting passengers or merchandise shall be furnished with the declaration and entry.

(C) *Dutiable items.*—If the special purpose vessel is operated in international or foreign waters 2 years or more after its last departure from the United States, the only dutiable items are fish nets and netting whenever purchased and any other items purchased or repairs made during the first 6 months after the vessel's last departure from the United States.

(iv) *Lash Barges.*—Lighter-aboard-ship (Lash) barges (see secs. 4.81 and 4.81a) and similar vessels documented for, or intended to engage in, the foreign or coasting trade are subject to this section.

(b) *Declaration and repair entry.*

(1) *Declaration.*—Upon first arrival of the vessel in the United States, the owner or master shall declare on Customs form 226 all equipment, parts, or materials purchased, and all repairs made, outside the United States. Except as provided in section 4.14(a)(2)(iii)(B), the declaration is required regardless of the dutiable status of such items or expenses. The declaration shall be ready for production on demand and for inspection by the boarding officer and shall be presented as part of the original manifest when formal entry of the vessel is made. Estimated duties shall be deposited or a bond on Customs form 7567 or 7569 shall be filed before the departure of the vessel, except as provided in subparagraph (2)(i). The amount of the bond shall be determined by the District Director as provided in section 113.14(m) of this chapter. See paragraph (g) of this section for applicable penalties.

(2) *Entry.*—All equipment, parts, or materials purchased for, and all repairs made outside the United States to, any vessel subject to the provisions of this section shall be entered on Customs form 226 by the master or owner of the vessel. The entry shall be filed with the appropriate Customs officer at the port of first arrival within 5 working days after arrival. The Customs officer with whom the entry is filed shall forward it to the appropriate vessel repair liquidation unit. The party filing the entry shall mark it to indicate whether it is a full and complete account or an incomplete account. See paragraph (g) of this section for applicable penalties.

(i) *Entry procedures for vessels owned or chartered by the United States.*—Whenever the appropriate Customs officer determines that a Government-owned or chartered vessel subject to the provisions

of this section (see par. (a)(2)(ii)) is being operated by an agency of the United States, or that a Government-owned or chartered vessel is being operated by a private party for an agency of the United States under an agreement that obligates the Government agency to pay any duty on the cost of repairs or purchases, the vessel shall be allowed to depart the port of first arrival without depositing estimated duties or furnishing a bond to cover estimated duties. In all other cases, the vessel shall be treated as though privately owned.

(ii) *Time period for submitting evidence of cost.*—Whenever a repair entry is submitted as a full and complete account, the entry papers shall include evidence showing the cost of each item listed on the entry. If a repair entry is submitted as an incomplete account, the evidence must be submitted within 60 days from the date of the vessel's arrival. If before the end of the 60-day period, the party that is required to furnish the evidence of cost submits a written request for an extension of time beyond the 60-day period, together with a satisfactory explanation of the delay, to the appropriate vessel repair liquidation unit, that unit may grant an additional 30-day extension of time to submit cost evidence. Any request for a further extension of time to furnish evidence of cost shall be submitted to the appropriate vessel repair liquidation unit, which shall transmit the request to Headquarters, U.S. Customs Service, Attention: Carrier Rulings Branch, for approval. If the costs shown on the complete account differ from the costs declared on the entry, the appropriate Customs officer may permit amendment of the entry.

(A) *Investigation to obtain evidence.*—If the required evidence is not furnished timely, or is of doubtful authenticity, the appropriate regional commissioner shall use all available means to obtain the necessary information and may refer the matter to the Office of Investigations. If an investigation is conducted, the Office of Investigations shall obtain all available evidence on the cost of the repairs and any evidence with respect to the reason for the party's failure to submit the evidence in a timely fashion.

(B) *Concurrent time period for submission of costs and filing application for relief.*—The 60-day time period to submit evidence of cost on the entry is concurrent with the 60-day time period to submit an application for relief under paragraph (d)(1)(ii) of this section and will not operate to provide additional time to submit an application for relief. A request for additional time to submit evidence of cost may include a request for additional time to submit an application for relief.

(c) *Remission or refund of duty.*

(1) *Vessel repair liquidation units.*—Vessel repair liquidation units under the supervision of the Regional Commissioner of Customs are established at New York, N.Y. (region II), New Orleans, La. (region V), and San Francisco, Calif. (region VIII). The region II unit shall process and liquidate each vessel repair entry filed at ports in regions I (Boston), II (New York), III (Baltimore), and IX (Chicago). The region V unit shall process and liquidate each vessel repair entry filed at ports in regions IV (Miami), V (New Orleans), and VI (Houston). The region VIII

unit shall process and liquidate each vessel repair entry filed at ports in regions VII (Los Angeles) and VIII (San Francisco). After processing and liquidation of the entries, the bulletin notices of liquidation shall be returned to the respective ports of entry for posting.

(2) *Authority.*—If clearly applicable precedent for a decision exists and any remission or refund of duty as a result of a decision will be less than $2,500, the Regional Commissioners of regions II, V, and VIII may approve or deny any application for relief on vessel repair entries filed at the ports within their respective jurisdictions. If there is no clearly applicable precedent on which to base a decision, or if the decision may result in a remission or refund of $2,500 or more in duty, the respective regional commissioner shall refer the matter to Headquarters, U.S. Customs Service, Attention: Carrier Rulings Branch, for advice before acting on the application for relief.

(3) *Basis for remission or refund.*—Remission or refund of duty is authorized if good and sufficient evidence is furnished which shows any of the following circumstances exist:

(i) *Stress of weather or other casualty.*—The vessel, while in the regular course of its voyage, was compelled, by stress of weather or other casualty, while outside the United States, to purchase such equipment or make such repairs, to secure the safety and seaworthiness of the vessel to enable it to reach its port of destination in the United States. However, only the duty on the cost of the minimal repairs needed for the safety and seaworthiness of the vessel is subject to remission or refund. For the purposes of this section, the term "casualty" does not include any purchases or repairs necessitated by ordinary wear and tear, but does include a part's failure to function if satisfactory evidence shows that the specific part was repaired or serviced immediately before starting the voyage from the U.S. port and that the part failed to function within 6 months of such repair or servicing.

(ii) *U.S. parts and equipment installed with American labor.*—The equipment, equipment parts, repair parts, or materials used on the vessel were manufactured or produced in the United States and purchased by the owner of the vessel in the United States, and the labor necessary to install such equipment or to make such repairs was performed by residents of the United States or by members of the regular crew of the vessel.

(iii) *Dunnage.*—The equipment, equipment parts, materials, or labor were used as dunnage for cargo, or for the packing or shoring thereof, or in the erection of temporary bulkheads or other similar devices for the control of bulk cargo, or in the preparation (without permanent repair or alteration) of tanks for the carriage of liquid cargo.

(d) *Procedure for remission or refund of duties.*

(1) *Application for relief.*

(i) *Form and contents.*—The application for relief need not be in any particular form. The application for relief should allege that an item or a repair expense covered by the entry is not subject to duty under paragraph (a) of this section, or that the articles purchased or the repair expenses are within the provisions of

paragraph (c) of this section, or that both conditions are present. The application for relief also shall certify that all foreign equipment, parts, or materials purchased for, and all foreign repairs made to, the vessel within 1 year immediately preceding the application have been declared as required by this section, or the application shall be deemed incomplete. The application for relief shall be signed by the master, owner, or operator of the vessel or their authorized agent. If the application for relief is filed by a corporation, it shall be signed by an authorized corporate officer.

(ii) *Place and time of filing.*—The application for relief shall be filed with the appropriate Customs officer at the port where the vessel repair entry was made or with the appropriate vessel repair liquidation unit (see par. (c)(1) of this section). If filed at the port where the entry was made, the Customs officer who receives the application shall promptly forward it, together with his comments, if any, to the appropriate vessel repair liquidation unit. The application for relief, with supporting evidence, shall be filed within 60 days from the date of first arrival of the vessel. However, if good cause is shown, the appropriate vessel repair liquidation unit may authorize one 30-day extension of time to file beyond the 60-day filing period.

(iii) *Supporting evidence.*—Unless such evidence is already filed with Customs, each application for relief shall include duplicate copies of the following evidence, in addition to any other documents the applicant wishes to submit in support of the application:

(A) All itemized bills, receipts, and invoices covering items specified in paragraph (a)(1) of this section, segregating the cost of those items for which relief is sought from all other items listed in the vessel repair entry.

(B) Full and complete photocopies of the relevant parts of the vessel's logs.

(C) Photocopies of any American Bureau of Shipping or other classification society report of the cause and type of damage and the nature of the remedial action taken, together with photocopies of any certifications of seaworthiness.

(D) A certification by the master or other responsible vessel officer with personal knowledge of the facts relating to the relief sought, including, but not limited to, details of the claimed stress of weather or other casualty, when and where it occurred, the damages due to such stress of weather or other casualty, and the place and date where the vessel was repaired or the equipment for the vessel was purchased.

(E) A certification by the master as to whether the repairs or equipment purchases were necessary for the safety and seaworthiness of the vessel to enable it to reach its port of destination in the United States.

(F) A written description of the circumstances involved by the master or other responsible vessel officer having knowledge of the facts when remission or refund is sought under the provisions of paragraph (c)(3)(ii) (relating to the use of American equipment and labor) or (c)(3)(iii) (relating to dunnage) of this section.

(iv) *Documentary evidence.*—All documents submitted in sup-

port of an application must be certified by the master or owner of the vessel to be originals or copies of originals. If a vessel is owned or operated by a corporation, the master or an authorized corporate officer shall certify the documents. Documents in a foreign language shall be accompanied by an English translation that is certified for accuracy by the translator.

(v) *Action.*—Within 60 days after receipt of an application for relief by a vessel repair liquidation unit, the appropriate regional commissioner shall either approve or deny the application for relief or forward it to Headquarters, U.S. Customs Service, Attention: Carrier Rulings Branch, for advice, as provided in paragraph (c)(2) of this section. The appropriate regional commissioner shall give prompt written notice of any final decision to the party who submitted the application. The notice shall advise the party of its right to petition for review of the decision under paragraph (d)(2) of this section. If the decision involves remission of duty under paragraph (c) of this section and the entry has been liquidated, reliquidation is not required. If any other relief is granted and the entry has been liquidated, reliquidation is required.

(vi) *Suspension of liquidation.*—If an application for relief has been filed within the time period provided in paragraph (d)(1)(ii) of this section, liquidation of the vessel repair entry shall be suspended until 30 days after the date of the written notice provided for in paragraph (d)(1)(v) of this section.

(2) *Petition for review on a denial of an application for relief.*

(i) *Form.*—If an applicant is dissatisfied with the decision on its application for relief, the applicant may file a petition for review of that decision. The petition for review need not be in any particular form. The petition for review must identify the decision on the application for relief and must detail the exceptions taken to that decision. The petition shall be signed by the master, owner, or operator of the vessel, or their authorized agent. If the petition for review is filed by a corporation, it must be signed by a duly authorized corporate officer.

(ii) *Place and time of filing.*—The petition for review shall be addressed to the Commissioner of Customs and shall be filed with the appropriate vessel repair liquidation unit within 30 days after the date of the written notice to the party of the decision on the application for relief, as provided in paragraph (d)(1)(v) of this section. However, if good cause is shown, the appropriate vessel repair liquidation unit may authorize one additional 30-day extension of time.

(iii) *Action.*—The appropriate regional commissioner promptly shall transmit a copy of the petition for review, any comments and recommendations he may have on the petition for review, and the entire file on the application for relief to Headquarters, U.S. Customs Service, Attention: Carrier Rulings Branch, for decision. After notification of the decision by headquarters, the appropriate regional commissioner shall give written notification of that decision to the party who filed the petition for review. The notice will inform the party of his right to submit a supple-

mental petition for review and that no further suspension of liquidation will be permitted.

(iv) *Suspension of liquidation.*—If an original petition for review is filed within the time provided for in paragraph (d)(2)(ii) of this section, liquidation of the vessel repair entry shall be suspended further until the regional commissioner notifies the party who filed the petition of the decision on the petition. Following notification of the headquarters decision to the party who filed the petition, the vessel repair liquidation unit shall promptly initiate liquidation of the entry in accordance with that decision even if a supplemental petition for review is filed.

(e) *Liquidation of vessel repair entries, time limits.*—If evidence of cost is available and the appropriate vessel repair liquidation unit receives written notification from the master, owner, or operator of the vessel, or their authorized agent, that an application for relief will not be filed, the vessel repair liquidation unit promptly shall initiate liquidation of the entry. In all other cases in which the evidence of cost is available, the entry may be liquidated 60 days after arrival of the vessel, or at the expiration of any extension of time granted under paragraph (b)(2)(ii) of this section to furnish evidence of cost, unless an application for relief is filed timely as provided in paragraph (d)(1)(ii) of this section. If an application for relief is filed timely, the vessel repair entry may be liquidated 30 days after the date of the written notice to the party who filed the application for relief, as provided in paragraph (d)(1)(v), unless a petition for review is filed timely under paragraph (d)(2)(ii) of this section. If a petition for review is filed timely, the vessel repair entry may be liquidated after the date of the notification of the decision on the petition to the party who filed the petition even though a supplemental petition for review is filed.

(f) *Protests.*—Following liquidation of an entry, a protest under part 174 of this chapter may be filed against the decision to treat an item or a repair as dutiable under paragraph (a) of this section.

(g) *Penalties.*

(1) *Failure to report, enter, or pay duty.*—If the owner or master of a vessel subject to the provisions or paragraph (a) of this section willfully or knowingly neglects or fails to report, make entry, and pay duties as required, or if he makes any false statement in respect of the purchases or repairs described in this section without reasonable cause to believe the truth of the statements, or aids or procures the making of any false statement as to any material matter without reasonable cause to believe the truth of the statement, the vessel, with its tackle, apparel, and furniture, or a monetary amount up to the value thereof as determined by the Secretary of the Treasury, to be recovered from the owner, shall be subject to seizure and forfeiture.

(2) *False declaration.*—If any person required to file a declaration on Customs form 226, by paragraph (b)(1) of this section, or to file an entry on Customs form 226, by paragraph (b)(2) of this section, willfully and knowingly provides any false information, or willfully and knowingly omits any required information,

that person shall be subject to the criminal penalties provided for in 18 U.S.C. 1001.

(R.S. 251, as amended, secs. 466, 498, 514, 624, 46 Stat. 718, as amended, 728, as amended, 734, as amended, 759, 84 Stat. 1944 (19 U.S.C. 66, 1466, 1498, 1514, 1624).)

(T.D. 80-238)

Foreign Currencies—Daily Rates For Countries Not on Quarterly List

Rates of exchange based on rates certified to the Secretary of the Treasury by the Federal Reserve Bank of New York for the Brazil cruzeiro, People's Republic of China yuan, Hong Kong dollar, Iran rial, Philippines peso, Singapore dollar, Thailand baht (tical), and Venezuela bolivar

The Federal Reserve Bank of New York, pursuant to section 522(c), Tariff Act of 1930, as amended (31 U.S.C. 372 (c)), has certified buying rates for the dates and foreign currencies shown below The rates of exchange, based on these buying rates, are published for the information and use of Customs officers and others concerned pursuant to part 159, subpart C, Customs Regulations (19 CFR 159, subpart C).

Brazil cruzeiro:	
September 15–16, 1980	$0. 0179
September 17–19, 1980	. 0176
People's Republic of China yuan:	
September 15–18, 1980	$0. 628128
September 19, 1980	. 679440
Hong Kong dollar:	
September 15, 1980	$0. 202396
September 16, 1980	. 202224
September 17, 1980	. 202204
September 18, 1980	. 202020
September 19, 1980	. 201755
Iran rial:	
September 15–	Not available
Philippines peso:	
September 15–18, 1980	$0. 1326
September 19, 1980	. 1325
Singapore dollar:	
September 15, 1980	$0. 473037
September 16, 1980	. 472813
September 17, 1980	. 472478
September 18, 1980	. 473934
September 19, 1980	. 474496

Thialand baht (tical):
September 15–19, 1980 ..... $0.0488
Venezuela bolivar
September 15–19, 1980 ..... $0.2329

(LIQ-3-01 O:C:E)

Dated: September 19, 1980:

NANCY I. BROWN,
Chief, Customs Information Exchange.

U.S. Customs Service

Proposed Rulemaking

(19 CFR Part 101)

GENERAL PROVISIONS

PROPOSED CHANGE IN FIELD ORGANIZATION OF THE CUSTOMS SERVICE

AGENCY: U.S. Customs Service, Department of the Treasury.

ACTION: Proposed rule.

SUMMARY: This notice proposes to change the field organization of the Customs Service by extending the existing port limits of Sandusky, Ohio, to incorporate all of Huron Township and the city of Huron, Ohio, and to revoke the status of Huron, Ohio, as a Customs station. The proposed change would enable Customs to keep pace with a significant expansion of Customs-related activities in Huron Township and the city of Huron. The proposed change is part of Customs continuing program to obtain more efficient use of its personnel, facilities, and resources, and to provide better service to carriers, importers, and the public.

DATES: Comments must be received on or before 60 days from the date of publication in the Federal Register.

ADDRESS: Comments (preferably in triplicate) may be addressed to the Commissioner of Customs, Attention: Regulations and Research Division, U.S. Customs Service, 1301 Constitution Avenue NW., Room 2335, Washington, D.C. 20229.

FOR FURTHER INFORMATION CONTACT: Renee DeAtley, Office of Inspection, U.S. Customs Service, 1301 Constitution Avenue NW., Washington, D.C. 20229; 202–566–8157.

SUPPLEMENTARY INFORMATION:

BACKGROUND

During the past few years, significant Customs activity at the Sandusky, Ohio, port of entry gradually has shifted eastward to

Huron Township and the city of Huron, Ohio, both of which are outside the existing port limits. The result has been recurrent requests for Customs services and assignment of Customs officers to Huron Township and the city of Huron on a temporary basis, as needed. This causes delays and increases expenses.

To provide the most economical and efficient service to the public and to meet the expanded needs of the importing community in Huron Township and the city of Huron, Customs proposes to extend the existing port limits of the Sandusky port of entry (region IX) to include all of Huron Township and the city of Huron and to revoke the status of Huron, Ohio, as a Customs station

The extension of the port limits would enable Customs to station officers where needed within the port limits, on a permanent basis, thus reducing costs to the importing public. The extension of the port limits also would enable Customs to keep pace with the expansion of Customs-related activities in Huron Township and the city of Huron, and to provide better coordination of Customs services and more efficient use of available resources. The extension would not require any additional manpower.

As extended, the geographical boundaries of the proposed Sandusky port of entry would include: All the territory within the geographical limits of the city of Sandusky, Huron Township, and the city of Huron, all in the State of Ohio.

If the proposed change is adopted, the list of Customs regions, districts, and ports of entry in section 101.3(b), Customs Regulations (19 CFR 101.3(b)), would be amended accordingly. Section 101.4(c), Customs Regulations (19 CFR 101.4(c)) also would be amended to delete Huron, Ohio, from the list of Customs stations.

COMMENTS

Before adopting this proposal, consideration will be given to any written comments submitted to the Commissioner of Customs. Comments submitted will be available for public inspection in accordance with section 103.8(b), Customs Regulations (19 CFR 103.8(b)), during regular business hours at the Regulations and Research Division, Room 2335, Headquarters, U.S. Customs Service, 1301 Constitution Avenue NW., Washington, D.C. 20229.

AUTHORITY

This change is proposed under the authority vested in the President by section 1 of the act of August 1, 1914, 38 Stat. 623, as amended (19 U.S.C. 2), and delegated to the Secretary of the Treasury by Executive Order No. 10289, September 17, 1951 (3 CFR 1949–1953

comp., ch. II), and pursuant to authority provided by Treasury Department Order No. 101–5 (44 F.R. 31057).

DRAFTING INFORMATION

The principal author of this document was Laurie Strassberg Amster, Regulations and Research Division, Office of Regulations and Rulings, U.S. Customs Service. However, personnel from other Customs offices participated in its development.

Dated: September 17, 1980.

RICHARD J. DAVIS,
Assistant Secretary of the Treasury.

[Published in the Federal Register, Sept. 29, 1980 (45 F.R. 64211)]

Decision of the United States Customs Court

United States Customs Court

One Federal Plaza
New York, N.Y. 10007

Chief Judge

Edward D. Re

Judges

Paul P. Rao
Morgan Ford
Scovel Richardson
Frederick Landis
James L. Watson
Herbert N. Maletz
Bernard Newman
Nils A. Boe

Senior Judge

Samuel M. Rosenstein

Clerk

Joseph E. Lombardi

Customs Decision

(C.D. 4872)

F. W. MYERS & CO., INC., PLAINTIFF *v.* UNITED STATES, DEFENDANT

Consolidated Court No. 72-5-01183

Iron Powder (Atomet 28 plus additives)

SPONGE IRON POWDER—BLENDED POWDERS—POROSITY UNAFFECTED

Atomet 28 iron powder to which small amounts of a lubricant, graphite, and copper are added in varying combinations in the manufacturing process prior to exportation from Canada, *Held*, classifiable upon importation into the United States as claimed under TSUS item 608.02 as sponge iron powder where the record shows that the additives are introduced into the dominant iron

powder only to improve existing properties in the iron, do not affect the porosity of the Atomet 28 particles, and such blending is common practice in preparation for conventional powder metallurgical application and compatible with the legislative history of the tariff provisions for sponge iron as well as with provisions in the TSUS permitting treatment of metals to improve their properties.

[Judgment for plaintiff.]

(Decided September 11, 1980)

Arter Hadden & Hemmendinger (*Barry E. Cohen* at the trial and on the brief); *Covington & Burling* (*Lyn Marie Schlitt* at the trial; *Harvey M. Applebaum* and *Lyn Marie Schlitt* on the brief); *Patrick H. Bowen*, Assistant General Counsel, Kennecott Copper Corporation, of counsel; for the plaintiff.

Alice Daniel, Assistant Attorney General; *Joseph I. Liebman*, Attorney in Charge, Field Office for Customs Litigation (*Robert H. White* at the trial and on the brief), for the defendant.

RICHARDSON, Judge: The merchandise in this case consists of five iron powders imported from Canada in 1971 or 1973 and known commercially as Atomet 2810, 2815, 2827, 2831, and 2835.[1] Upon entry into the United States they were classified in liquidation under TSUS item 608.05 as modified by T.D. 68–9 as other powders other than alloy iron or steel at the duty rate of 0.3 cent per pound. And plaintiff claims that the powders should have been classified in liquidation under TSUS item 608.02 as modified by T.D. 68–9 as sponge iron powder not containing chromium in excess of 0.2 percent, molybdenum in excess of 0.1 percent, tungsten in excess of 0.3 percent, and vanadium in excess of 0.1 percent [see headnote 4, subpart R, part 2, schedule 6, TSUS] at the duty rate of 12 cents per ton for the 1971 entry, and free of duty for the 1973 entries.

The base powder, Atomet 28, has heretofore been adjudged by this court to be classifiable as a sponge iron powder under item 608.02 in *F. W. Myers & Co., Inc.* v. *United States*, 76 Cust. Ct. 51, C.D. 4635 (1976), the record of which has been incorporated into the record in this case. And the suffixes 10, 15, 27, 31, and 35, which are added to the Atomet 28 designation in the importations at bar, are indicative of various additives to the base powder itself. Thus, the primary question before the court is whether these additives, consisting of small amounts of (1) a lubricant [either acrawax C, zinc stearate, or stearic acid], as in Atomet 2827, or (2) a lubricant plus graphite, as in Atomet 2810 and 2815, or (3) a lubricant, graphite, and copper, as in Atomet 2831, or (4) a lubricant and copper, as in Atomet 2835, remove the powders from item 608.02 classification as sponge iron powder. In all cases, the

[1] The powders were produced by Quebec Metal Powders, Ltd., the Canadian manufacturer and real party in interest.

base powder [Atomet 28 iron] content by weight ranges from a low of 96.6 percent as in Atomet 2831 to a high of 99.01 percent as in Atomet 2827

In opposing classification of the subject merchandise as sponge iron powders, defendant places much reliance upon a so-called industrywide usage of the term "pre-mix" to denote a cleavage between the imported powders which it regards as being "pre-mixes" and the unmixed powder which it regards as constituting the premier condition for a sponge iron powder. However, testimony adduced from industry witnesses called by defendant on the matter are not determinative in the court's view. While an attempt has been made to regulate nomenclature and standardize terminology in the powder metallurgy industry subsequent to the adoption of the TSUS, uniformity has not been achieved in the industry with respect to usage of the term "pre-mix". In fact, it was brought out in the testimony of one of defendant's witnesses that the term "pre-mix" which, at best, is voluntary and unbinding, has on occasion been disregarded by the witness' own company.

Of greater significance is testimonial evidence in the record relative to powder porosity and industry practice in regard to additives. Testimony indicates that porosity is unaffected by the presence of additives. Dr. Joseph Capus, Quebec Metal Powders' technical director, testified that blending does not change the porosity of the powder because the additives mixed in the blend are only mixed physically, and there is no reaction between the iron and the additives in that state. And this testimony was corroborated by the testimony of George Abbott, who, at one time was general manager of A. O. Smith-Inland, a former domestic iron powder producer, as well as by customs laboratory reports of physical and chemical analyses of two of the blends in issue which conclude that the powders have the appearance of a sponge iron powder.

Additionally, witnesses from both the domestic industry and the Canadian industry agreed that unblended sponge iron powder alone cannot be used in conventional powder metallurgy; that at least a lubricant must be added to the powder. And they confirmed that blends of sponge iron powder with copper, graphite (carbon), and lubricants are very common in the industry. According to the witnesses Capus and Abbott, these additives introduce no new properties to the iron but only enhance or improve existing properties such as hardness, strength, or machineability in the final sintered product.

Defendant suggests that the only additives which can be identified with sponge iron powder for classification purposes are those provided for in headnote 4, subpart B, part 2, of TSUS Schedule 6, namely, chromium, molybdenum, tungsten, and vanadium. However, the

court does not find the reference in headnote 4 to these elements to constitute a limitation on the permissible additives to sponge iron powder classifiable under the superior heading "Sponge iron; iron or steel powders". Headnote 4 is common to three other superior headings in subpart B, including the iron and steel products provision to which attention is drawn by defendant under point B of its brief at page 33.

It is to be noted that under headnote 2(g) steel is defined as "an alloy of iron and carbon which is malleable as first cast." And, immediately following this definition the headnote states, "*Steel may contain other elements intended to enhance one or more properties* and may contain elements unavoidably retained from raw materials, but iron must predominate, by weight, over each of the other elements." [Italic added.] Hence, if the elements referred to in headnote 4 were written into subpart B as a limitation on the presence of elements in iron, the definition of steel as set forth in headnote 2, supra, would be frustrated.

Essentially the same conclusion was reached by the court in *John V. Carr & Sons, Inc.* v. *United States*, 50 Cust. Ct. 29, C.D. 2384 (1963), in connection with a construction of the predecessor provision for sponge iron in paragraph 301 of the 1930 Tariff Act as modified by the Annecy and Torquay protocols to the General Agreement on Tariffs and Trade (GATT). In *Carr*, the Customs Court held "Sponge Iron Powder MP.52" to be properly classifiable under the provision for sponge iron in paragraph 301 as against the Government's contention that the addition of fractional percentages of nickel and molybdenum in the production of the sponge iron cake altered the physical characteristics of the iron, resulting in the production of an alloy iron powder, or an alloy steel. The court said (p. 35):

> * * * the presence of nickel and molybdenum in the commodity results in producing a substance which is commercially used as a hardening additive in the production of automotive parts.

The court further stated (p. 36):

> Molybdenum is an element which gives strength and vitality to sponge iron, thereby adding to its usefulness in the fabrication of engineering parts.

Chromium, molybdenum, tungsten, and vanadium are not impurities in sponge iron powder. They are identified in the TSUS as alloying elements (headnote 2(h), subpart B, schedule 6, TSUS). And the court is of the opinion that the reference to these elements in headnote 4 only reflects a tolerance for their presence in the host metal in terms of dutiability without necessarily affecting the classification of the metal itself. See and compare, *United States* v. *Gulf Oil Corporation*, 47 CCPA 32, 40, C.A.D. 725 (1959).

Moreover, with the shift in emphasis in the TSUS metal schedule to weight of metal as the basis for classification and away from the metal in chief value basis of the 1930 and prior tariff acts in conformity to commercial practice, such concerns as additive costs and admixture of elemental materials, whether metallic or nonmetallic, appear to no longer possess the significance they previously had in influencing classification, and have virtually become casualties of the metamorphosis. See "Tariff Classification Study, Schedule 6," pages 86 and 88. Certainly, the framers of the TSUS left no doubt that this change in emphasis, initiated with respect to the alloy provisions, carried over into the revision of the metal schedule in general. See id., pages 687–688, remarks of Russell N. Shewmaker, Assistant General Counsel to the Tariff Commission. Thus, in the absence of specific tariff language to the contrary, the mixing or blending of materials, metallic or nonmetallic, with a host metal in conformity to standard powder metallurgical practice is to be regarded as subjecting the dominant metal to treatment to improve its properties, but not removing it from classification under the tariff provision which describes it. See headnote 1, part 2, schedule 6, TSUS. And no such inhibiting language appears in either the superior heading to item 608.02 or in the subpart B headnotes preceding item 608.02.

As to item 608.05 under which the imported powders were classified, legislative history indicates that it was not intended as a basket or residual provision (precisely the kind of thing the framers of the TSUS were striving to eliminate). Item 608.05 (unalloyed powders) was substituted for proposed item 608.06 (other powders not mixed with other metal powders) which was derived from paragraphs 5 and 335 of the 1930 Tariff Act, i.e., chemical metal and sand of iron or steel, respectively. See "Tariff Classification Study, Schedule 6," pages 47 and 92; "Tariff Classification Study, First Supplemental Report," pages 150–151.

The most sign ficant thing about this change is the dropping of the language "not mixed with other metal powders" in proposed item 608.06 without a corresponding expansion of the definition of alloy in part 2, headnote 2, of TSUS Schedule 6 to include simple mixtures of metal powders while implying as much in language describing sponge iron powders in items 608.02 and 608.04 which remained intact. See "Tariff Classification Study, Schedule 6," pages 32 and 47. In this manner the draftsmen avoided any possible confusion between powders in which mixtures of metal powders were implicit (sponge iron powders) and those in which such mixtures were not contemplated (chemical metal and sand of iron or steel). This, then constitutes but an additional indication that sponge iron powders were never intended to be classified under item 608.05.

For the reasons stated, the court agrees with plaintiff that the record in this case does not provide a basis for any legal or factual justification for distinguishing between the blended powders in issue and unblended sponge iron powder such as that the subject of C.D. 4635 for classification purposes. Accordingly, the court finds the powders in issue to be sponge iron powders within the meaning of item 608.02, and so holds.

Judgment will be entered herein accordingly.

Decisions of the United States Customs Court

Customs Rules Decisions

(C.R.D. 80–10)

ATLANTIC SUGAR LTD., ET AL., PLAINTIFFS *v.* THE UNITED STATES, DEFENDANT

Court No. 80–5–00754

Memorandum Opinion and Order Governing Access by Plaintiffs to Confidential Documents

(Dated September 12, 1980)

WATSON, Judge: This dispute regarding access to confidential documents arises in an action challenging the determination by the International Trade Commission (hereafter referred to as ITC), that importation of sugar from Canada was causing material injury to an industry in the United States. The action was commenced to seek judicial review of a final antidumping duty order under section 516(a)(a)(2) of the Tariff Act of 1930, 19 U.S.C. 1516 a(a)(2).

Plaintiffs, who are Canadian producers of refined sugar, seek access to certain documents which had been given confidential status by the ITC. The documents in contention consisted initially of a number of completed questionnaires submitted to the ITC by domestic sugar producers. The Government cross-moved for a protective order as to those documents. Amstar Corp., a domestic sugar producer whose petition initiated the administrative proceeding, intervened in this action and opposed plaintiffs' motion to the extent that it sought Amstar's answer to the questionnaire and other confidential documents containing information regarding Amstar's business operations. The plaintiffs withdrew their request for the completed questionnaires of other producers, leaving the disclosure of document 25 (Amstar's questionnaire) opposed by Amstar and the Government and the disclosure of documents 2, 3, 9, 10, and 11 opposed by Amstar. The latter documents contain information regarding financial

performance, distribution, sales, and financial indicators for a number of domestic sugar producers, including Amstar. The information deals separately with the Northeastern States and other States.[1]

The court has examined the documents in camera and concludes that access to this information should be granted. See title 19, U.S.C. 1516a(b)(B). The details of the financial performance of domestic sugar producers and the data bearing on the existence of a regional sugar producing industry are important in determining whether there was substantial evidence to support the determination of injury. The information also relates to the circumstances pertaining to the use of a "regional industry," as defined in 19 U.S.C. 1677(4)(c), rather than the domestic industry as a whole, for the purpose of determining injury. The court has not been persuaded that nonconfidential summaries of such material can be utilized for these purposes. Since the court is aware of the sensitive nature of a great deal of this information it therefore, adopts the terms and conditions of plaintiffs' proposed order. For the above reasons and upon careful consideration of plaintiffs' motion, the opposition by Intervenor Amstar Corp., the cross-motion for a protective order by the defendant United States, the response thereto by plaintiffs and all other pleadings and papers on file, it is hereby

ORDERED that plaintiffs motion be, and the same hereby is granted. It is further

ORDERED that the confidential documents numbered 2, 3, 9–11, 25, 42, 45–46, 49–50, 52, 56–57, and 61 in list No. 2, transmitted to the U.S. Customs Court in connection with this action, shall be available to counsel for plaintiffs for examination and copying at the office of the Clerk of this Court during the business days of the 30-day period commencing on the date of entry of this order, subject to the terms and conditions specified below.

1. All of the information not previously made publicly available contained in the confidential documents in list No. 2, "Confidintial documents transmitted to the U.S. Customs Court," shall be considered confidential.

2. Except as otherwise provided in this order, counsel for plaintiffs shall not disclose the confidential information to anyone other than their immediate office personnel actively assisting in this litigation.

3. Counsel for plaintiffs and their immediate office personnel shall neither disclose nor use any of the confidential information for pur-

---

[1] The court has also examined defendant's motion for protective order regarding other privileged documents included in the Administrative Record. An affidavit and claim of privilege by Mr. Bill Alberger, Chairman of the ITC, has been filed in support of this motion. In view of plaintiffs' response to defendant's cross-motion for protective order the court understands that at this time there is no controversy as to these documents and this order shall not be deemed to cover the disclosure of the same.

poses other than this litigation or (subject to continued safeguards to preserve confidentiality) any remand or appeal of this matter. Wherever used in this order, the term "this litigation" shall be deemed to include any remand or appeal resulting therefrom.

4. If, in the opinion of counsel for any party it becomes necessary to consult with experts independent of the industry involved in evaluating the confidential information, such experts shall agree not to disclose any of the confidential information to anyone other than to the counsel who consulted with them or to that counsel's office personnel, and then for purposes of this litigation only; any expert so consulted shall first sign a statement submitting themselves to the jusisdiction of the Customs Court and such reasonable sanctions as the Court may hold appropriate in the event of a breach of the conditions of this protective order by them.

5. In no event shall disclosure of confidential information be made to in-house counsel or other representatives, agents, or employees of plaintiffs or the interested parties.

6. Counsel for plaintiffs shall maintain a record of any and all copies of confidential information made, to whom they are provided and when they are returned. All such copies shall be clearly labeled as containing confidential information and that they are to be returned at the conclusion of this litigation.

7. Any documents, including briefs and memoranda, containing any of the confidential information, which are filed with the court in this case, shall be conspicuously marked as containing information which is not to be disclosed to the public, and arrangements shall be made with the clerk of this court to retain such documents under seal, permitting access only to the court, court personnel authorized by the court to have access, and counsel for the parties. Copies of all the foregoing documents, but with the confidential information deleted, shall be filed with the court at the same time that the documents containing the confidential information are filed.

8. Any briefs or memoranda containing confidential information shall be served upon the other parties in a wrapper conspicuously marked on the front "Confidential"—to be opened only by (the name(s) of the attorneys handling the case): and shall be accompanied by a separate copy from which the confidential information has been deleted.

9. Upon conclusion of this litigation or any appeal or remand of this matter, counsel for plaintiffs and the interested parties shall (a) return all copies of the confidential documents obtained under this order and the record required to be maintained under paragraph 6 above, and (b) destroy all other documents (including documents held

by persons authorized under this order to have access thereto) containing the confidential information.

10. Any reference to plaintiffs' counsel herein shall include any other interested party who may subsequently be granted access to such documents under protective order.

(C.R.D. 80–11)

SOUTHWEST FLORIDA WINTER VEGETABLE GROWERS ASSOCIATION, ET AL., PLAINTIFFS *v.* UNITED STATES, DEFENDANT AND WEST MEXICO VEGETABLE DISTRIBUTORS ASSOCIATION, INTERVENOR

Court No. 80-4-00577

Order on Defendant's Motion for an Order Protecting Privileged Documents

(Dated September 12, 1980)

MALETZ, Judge:

I. Upon examination by the court in camera of each of the documents contained in volume 11 of the administrative record for which the Secretary of Commerce and the Secretary of the Treasury have claimed executive privilege, and upon consideration of defendant's motion for an order protecting these documents from disclosure to plaintiffs and plaintiffs' response thereto, it is hereby ORDERED:

A. That the court upon carefully weighing the Government's need in the public interest in maintaining the confidentiality of each of the following documents as to which the Secretary of Commerce and the Secretary of the Treasury have claimed executive privilege as against the need of the plaintiffs for these documents in prosecuting this action, and the court having concluded that the Government's need in maintaining the confidentiality of these documents outweighs the need of the plaintiffs in prosecuting the action, the court orders that the claim of executive privilege with respect to the following documents be sustained and that such documents shall not be disclosed to plaintiffs:

1. An undated memorandum from Under Secretary Solomon to Secretary Blumenthal re "Perishable Products and the Antidumping Law: An Update."

2. An undated memorandum from Robert H. Mundheim to C. Fred Bergsten re "Briefing memo for your meeting with Mexican Officials on Vegetable Case."

3. Memo for: C. Fred Bergsten
From: John E. Ray
Subject: U.S.-Mexico MTN Consultations Undated

4. Memo for: C. Fred Bergsten
From: Gary C. Hufbauer
Subject: Treatment of Perishable Products in Antidumping and Escape Clause Cases
Dated: May 2, 1979

5. With the exception of the next to last paragraph of page 2:
Memo for: Under Secretary Solomon
From: Arnold Nachmanoff, Acting Assistant Secretary
Subject: U.S. Embassy Mexico's Concerns with Treasury Antidumping Investigation
Dated: June 12, 1979

B. That the court upon carefully weighing the Government's need in the public interest in maintaining the confidentiality of each of the following documents as to which the Secretary of Commerce and the Secretary of the Treasury have claimed executive privilege as against the need of the plaintiffs for these documents in prosecuting this action and the court having concluded that the need of the plaintiffs for these documents in prosecuting the action outweighs the Government's need in maintaining the confidentiality of the documents, the court orders that the claim of executive privilege with respect to each of the following documents be denied and that a true, accurate, and complete copy of each of such documents shall be made available to plaintiffs on or before September 19, 1980, under the terms of the protective order "Stipulation Governing Plaintiffs' Access to Volumes 7–10 and 12–25," which was filed with the court in this case and was signed by the court on June 24, 1980:

1. A memorandum, dated May 1, 1979, from Lynn J. Barden/Linda F. Potts to Robert H. Mundheim re "Mexican Vegetables and Possible Amendment of ADA as it pertains to Perishables."

2. A memorandum, dated April 27, 1979, from Deputy Assistant Secretary Hufbauer to Secretary Blumenthal re "Perishable Products and the Antidumping Law; The Case Against Mexican Exports of Winter Vegetables."

3. A memorandum, dated May 25, 1979, from Assistant Commissioner (operations) to Commissioner of Customs re "Antidumping Investigation of Fresh Winter Vegetables from Mexico."

4. A draft memorandum, dated July 15, 1979, from Peter D. Ehrenhaft to Robert H. Mundheim re "Winter Vegetables from Mexico—Tentative Determination under Antidumping Act."

5. A draft memorandum, dated July 18, 1979, from Peter D. Ehrenhaft to Robert H. Mundheim re "Winter Vegetables from Mexico—Tentative Determination Under Antidumping Act."

6. An undated draft memorandum from Peter D. Ehrenhaft to Robert H. Mundheim re "Winter Vegetables from Mexico—Tentative Determination Under Antidumping Act."

7. A memorandum, dated July 16, 1979, from Commissioner of Customs to General Counsel re "Certain Fresh or Chilled Vegetables from Mexico."

8. A July 23, 1979 briefing paper by Peter D. Ehrenhaft re "Antidumping Proceeding Concerning Fresh Winter Vegetables from Mexico."

9. A September 28, 1979 "Significant Activity" memorandum from V. Kane to Division Director, reporting on a meeting held September 28.

10. An undated buckslip from Linda Potts to Bob Mundheim.

11. A draft memorandum, dated July 15, 1979, from Robert H. Mundheim to the Secretary re "Tentative Determination Under Antidumping Act in the Case of Mexican Winter Vegetables."

12. The next to last paragraph of page 2 of:

Memo for: Under Secretary Solomon
From: Arnold Nachmanoff, Acting Assistant Secretary
Subject: U.S. Embassy Mexico's Concerns with Treasury Antidumping Investigation
Dated: June 12, 1979

II. Upon examination by the court in camera of each of the documents contained in volume 11 of the administrative record for which the Secretary of State has claimed privilege and upon consideration of defendant's motion for an order protecting these documents from disclosure to plaintiffs and plaintiffs' response thereto, it is hereby ORDERED:

A. That the court having determined that there is a reasonable likelihood that disclosure of the following documents will be detrimental or injurious to the international relations of the United States, which outweighs the need of the plaintiffs in prosecuting this action, the court orders that the claim of privilege for such documents for national security reasons be sustained and that such documents shall not be disclosed to plaintiffs:

1. State Department cable 100396, dated April 21, 1979: Paragraph 1.

2. Mexico City cable 15561, dated September 11, 1979: Paragraph 2.

3. Letter from Ambassador Kreuger to the Secretary of Commerce, dated March 13, 1980: Enclosure 1 (diplomatic note from the Government of Mexico).

4. Mexico City cable 9175, dated June 2, 1979: Entire text.

5. Mexico City cable 9525, dated June 7, 1979: Entire text.

6. Mexico City cable 13475, dated August 9, 1979: Paragraphs 1, 2, and 3.

7. Mexico City cable 13985, dated August 17, 1979: Paragraphs 1, 2, 3, 4, and 5.

8. Mexico City cable 15079, dated September 5, 1979: Paragraphs 1, 2, 3, and 4.

9. Mexico City cable 18295, dated October 24, 1979: Paragraphs 1, 2, 3, 4, and 5.

B. That the court upon carefully weighing the Government's need in the public interest in maintaining the confidentiality of each of the following documents as to which the Secretary of State has claimed executive privilege as against the need of the plaintiffs for these documents in prosecuting this action, and the court having concluded that the Government's need in maintaining the confidentiality of theses documents outweighs the need of the plaintiffs in prosecuting the action, the court orders that the claim of executive privilege with respect to the following documents be sustained and that such documents shall not be disclosed to plaintiffs:

1. Letter from Ambassador Kreuger to the Secretary of Commerce, supra: Paragraph 2.

2. Letter from Ambassador Kreuger to the Secretary of Commerce, supra: Enclosure 2, Mexico City cable 4145, dated March 11, 1980: Entire text.

3. Mexico City cable 19796: Paragraph 1, last two sentences; paragraph 6, entire paragraph; and paragraph 7, final sentence.

4. State Department cable 197561, dated July 30, 1979: Entire text.

5. Mexico City cable 13475, dated August 9, 1979: Paragraphs 4 and 5.

6. Mexico City cable 13985, dated August 17, 1979: Paragraph 6.

7. Mexico City cable 15079, dated September 5, 1979: Paragraph 5.

8. Mexico City cable 18295, dated October 24, 1979: Paragraph 6.

Decisions of the United States Customs Court

Abstracts

Abstracted Protest Decisions

DEPARTMENT OF THE TREASURY, *September 16, 1978.*

The following abstracts of decisions of the U.S. Customs Court at New York are published for the information and guidance of officers of the Customs and others concerned. Although the decisions are not of sufficient general interest to print in full, the summary herein given will be of assistance to Customs officials in easily locating cases and tracing important facts.

ROBERT E. CHASEN,
Commissioner of Customs.

DECISION NUMBER	JUDGE & DATE OF DECISION	PLAINTIFF	COURT NO.	ASSESSED	HELD	BASIS	PORT OF ENTRY AND MERCHANDISE
				Par. or Item No. and Rate	Par. or Item No. and Rate		
P80/130	Richardson, J. September 9, 1980	Mattel, Inc.	73-2-00558, etc.	Items 737.90, 737.20, 737.25 or 737.30	Items 737.90, 737.20, 737.25 or 737.30, and	General Instrument Corporation v. U.S. (C.A.D. 1062)	Los Angeles American goods returned; articles assembled abroad

				Various rates without allowance under item 807.00	807.00 Various rates upon full value of imported articles less value of U.S. fabricated components as set forth in schedule attached to decision and judgment	The Olga Company v. U.S. (C.D. 4468)	in part of fabricated U.S. components; toys
P80/131	Newman, J. September 9, 1980	Rhodia, Inc.	80-1-00156	Item 423.00 5%	Item 519.37 0.4¢ per lb.	Agreed statement of facts	New York Cerox 1610, rare earth oxide and cerox 1611 (artificial abrasives)
P80/132	Ford, J. September 12, 1980	Camel Manufacturing Company	77-7-01371	Item 338.30 13¢ per lb. + 22.5%	Item 355.82 12.5¢ per lb. + 15%	H. Rosenthal Co. v. U.S. (C.D. 4769, aff'd C.A.D. 1236)	Los Angeles Coated nylon taffeta

Decisions of the United States Customs Court

Abstracts

Abstracted Reappraisement Decisions

DECISION NUMBER	JUDGE & DATE OF DECISION	PLAINTIFF	COURT NO.	BASIS OF VALUATION	HELD VALUE	BASIS	PORT OF ENTRY AND MERCHANDISE
R80/278	Newman, J. September 9, 1980	Charmilles Corp. of America	77-8-02285, etc.	United States value	Determined by adding to f.o.b. unit invoice price in Swiss francs converted to a dollar value at fixed rate of exchange as shown on special customs invoice in entry documents (the "claimed value"), 53% of difference between claimed value and appraised value	Agreed statement of facts	New York Machine tools and accessories and parts thereof
R80/279	Newman, J. September 9, 1980	Gehrig, Hoban & Co., Inc.	R70/1769, etc.	United States value	Determined by adding to f.o.b. unit invoice price in Swiss francs converted to a dollar value at rate of exchange in effect at time of entry (the	Agreed statement of facts	New York Machine tools and accessories and parts thereof

					"claimed value"), 53% of difference between claimed value and appraised value		
R80/280	Newman, J. September 9, 1980	North American Car Corporation	80-1-00170	Export value	$4,725,421 of which $824,-098 if free of duty under item 807.00, TSUS and $3,901,323 is subject to duty at 18% under item 690.15, TSUS	Agreed statement of facts	Laredo Railroad freight cars
R80/281	Newman, J. September 9, 1980	North American Car Corporation	80-1-00171	Export value	$3,540,106 of which $604,-042 is free of duty under item 807.00, TSUS and $2,936,064 is subject to duty at 18% under item 690.15, TSUS	Agreed statement of facts	Laredo Railroad freight cars
R80/282	Newman, J. September 9, 1980	Sherriff-Guerringue, Inc.	R70/9454, etc.	United States value	Determined by adding to f.o.b. unit invoice price in Swiss francs converted to a dollar value at rate of exchange in effect at time of entry (the "claimed value"), 53% of difference between claimed value and appraised value	Agreed statement of facts	Seattle Machine tools and accessories and parts thereof
R80/283	Boe, J. September 12, 1980	Conti Rubber Products, Inc.	74-11-03185, etc.	Foreign value	Appropriate claimed unit values (all in Deutsche mark) listed on schedule attached to decision and judgment	Agreed statement of facts	Tampa Various automotive tires

Recent Unpublished Customs Service Decision

The following listing of recent administrative decisions issued by the Office of Regulations and Rulings, U.S. Customs Service, and not otherwise published, is published for the information of Customs officers and the importing community. Although the decisions are not of sufficient general interest to warrant publication as Treasury decisions, the listing describes the issues involved and is intended to aid Customs officers and concerned members of the public in identifying matters of interest which recently have been considered by the Office of Regulations and Rulings.

A copy of any decision included in this listing, identified by its date and file number, may be obtained in a form appropriate for public distribution upon written request to the Office of Regulations and Rulings, Attention: Legal Reference Area, Room 2404, U.S. Customs Service, 1301 Constitution Avenue NW., Washington, D.C. 20229. These copies will be made available at a cost to the requester of 10 cents per page. However, the Customs Service will waive this charge if the total number of pages copied is 10 or less.

Decisions listed in earlier issues of the CUSTOMS BULLETIN, through July 2, 1980, are available in microfiche format at a cost of $23.85 (15 cents per sheet of fiche). It is anticipated that additions to the microfiche will be made quarterly and subscriptions are available. Requests for the microfiche now available and for subscriptions should be directed to the Legal Reference Area. Subscribers will automatically receive updates as they are issued and will be billed accordingly.

Dated: September 18, 1980.

JOHN T. ROTH,
Acting Director,
Regulations and Research Division.

Date of decision	File No.	Issue
8-29-80	104472	Vessel repair: Whether the unavailability of an American shipyard to complete repairs in time to a fish-processing vessel prior to fishing season renders foreign repairs nondutiable

Date of decision	File No.	Issue
8- 6-80	712843	Prohibited and restricted importations: Importation of nonconforming automobiles into the United States by foreign students and doctors in residency
8-11-80	060810	Classification: Sweet corn cannery waste (793.00)
9- 7-80	061886	Classification: Customs reliance upon a manufacturer's cost breakdown to determine component material of chief value of a coat
8-21-80	062938	Classification: Shelf article in the form of a stuffed elephant (386.04, 386.06, 386.09)
7-29-80	064067	Classification: Feed-pellet binder (184.85)
9- 7-80	064154	Classification: Polyvinyl foam pad (770.80, 772.15)
8-11-80	064449	Classification: Mesh shirts with protective padding (734.56)
8-11-80	064569	Classification: Fume exhausters (661.06)
8-11-80	064750	Classification: Fisherman's scissors (650.87, 650.89, 650.92)
7-30-80	064762	Classification: Whether stitching which forms a quilting effect on shirts is ornamental
8-11-80	064812	Classification: Tanning kit for making leather (270.25, 413.51, 432.25, 651.47)
8-11-80	064889	Classification: Sugar mill tandem (664.10, 666.20, 680.49)
8-29-80	064932	Classification: Instant hot water heater (684.40)
9- 7-80	064974	Classification: Weather strips (770.80, 771.55)
8-11-80	065140	Classification: Sweater of net construction (382.04)
7-30-80	065170	Classification: Whether pieced pockets with piping is ornamental; whether overlaid pocket frames around otherwise finished pocket opening is ornamental
9- 7-80	065195	American selling price: Women's flat slip-on slippers for indoor use (700.60)
8-21-80	065361	Classification: Whether a label with stylized lettering on Western-style shirt is ornamental
7-11-80	066023	Classification: Paddle-racquet (734.86, 735.20)
9- 6-80	066045	Classification: Mobile car-washing machine (678.50, 692.16)
8-11-80	066046	Classification: Whether label with plain block lettering on jeans is ornamental
9- 7-80	066061	Classification: Tillage tools (666.00)
8-11-80	066066	Classification: Lubricant additive (425.52, 429.60)
9- 8-80	066079	Classification: Fruit leathers in confectionary form (150.05, 157.10)
8-11-80	066094	Classification: Emulsion degreaser (409.30, 493.10)
8-11-80	066100	Classification: Chemical hand warmer (774.55, 799.00)
9- 7-80	066128	Classification: Motorcycle helmet (703.70, 703.72)
9- 8-80	066140	Classification: Cheese (117.88)
8-21-80	066152	Classification: Herbal tea (439.30)
9- 8-80	066170	Classification: Center pivot sprinkler system (662.50, 870.40)
8-29-80	066208	Classification: Indexation machine for computer (676.30)
9- 7-80	066454	Classification: Surgical sponge (386.50, 495.05)

Judgment of the U.S. Customs Court in Appealed Case

SEPTEMBER 11, 1980

APPEAL 79–40.—Travenol Laboratories, Inc. *v* United States.—SOLUTION ADMINISTRATION SETS—MEDICAL APPARATUS—TUBING OF RUBBER OR PLASTICS SUITABLE FOR CONDUCTING LIQUIDS—TSUS—SUMMARY JUDGMENT.—C.D. 4812 affirmed May 29, 1980 (C.A.D. 1247).

International Trade Commission Notices

Investigations by the U.S. International Trade Commission

DEPARTMENT OF THE TREASURY

The appended notices relating to investigations by the U.S. International Trade Commission are published for the information of Customs Officers and others concerned.

R. E. CHASEN,
Commissioner of Customs.

In the Matter of CERTAIN HOLLOW FIBER ARTIFICIAL KIDNEYS	Investigation No. 337–TA–81

Notice to All Parties

Notice is hereby given that a prehearing conference will be held in this case at 9 a.m. on September 23, 1980, in the Dodge Center, Room 201, 1010 Wisconsin Avenue NW., Washington, D.C. The purpose of this prehearing conference is to review the trial memoranda submitted by the parties, to stipulate into the record as many exhibits as possible, and to discuss any questions raised by the parties relating to the hearing.

Notice is also given that the hearing in this proceeding will commence at 9 a.m. on September 29, 1980, in the Dodge Center, Room 201, 1010 Wisconsin Avenue NW., Washington, D.C.

The Secretary shall publish this notice in the Federal Register.

JANET D. SAXON,
Administrative Law Judge.

Issued: September 15, 1980.

In the Matter of CERTAIN COIN-OPERATED AUDIO-VISUAL GAMES AND COMPONENTS THEREOF	Investigation No. 337-TA-87

Notice to All Parties

Notice is hereby given that the hearing in this case will be reopened on September 19, 1980, at 9 a.m. in the Dodge Center, Room 201, 1010 Wisconsin Avenue NW., Washington, D.C.

The Secretary shall publish this notice in the Federal Register.

Issued: September 15, 1980.

JANET D. SAXON,
Administrative Law Judge.

[731-TA-30 (Preliminary)]

MONTAN WAX FROM EAST GERMANY

Notice of Institution of Preliminary Antidumping Investigation and Scheduling of Conference

AGENCY: U.S. International Trade Commission

ACTION: Institution of preliminary antidumping investigation to determine whether there is a reasonable indication that an industry in the United States is materially injured, or is threatened with material injury, or the establishment of an industry in the United States is materially retarded, by reason of imports of montan wax from East Germany, provided for in item 494.20 of the Tariff Schedules of the United States (TSUS), which is alleged to be, or likely to be, sold in the United States at less than its fair value.

EFFECTIVE DATE: September 8, 1980.

FOR FURTHER INFORMATION CONTACT: Lynn Featherstone, Supervisory Investigator, 202-523-1376.

SUPPLEMENTARY INFORMATION:

BACKGROUND

This investigation is being instituted following receipt of a petition on September 8, 1980, filed by American Lignite Products Co., Ione, Calif., the sole U.S. producer of montan wax. The petition requested the imposition of additional duties in an amount equal to the amount by which the foreign market value exceeds the U.S. price of montan wax imported from East Germany.

AUTHORITY

Section 733(a) of the Tariff Act of 1930 (19 U.S.C. 1673b(a)) requires the Commission to make a determination of whether there is a reasonable indication that an industry in the United States is materially injured, or is threatened with material injury, or the establishment of an industry in the United States is materially retarded, by reason of imports alleged to be, or likely to be, sold in the United States at less than fair value. Such a determination must be made within 45 days after the date on which a petition is filed under section 732(b) or on which notice is received from the Department of Commerce of an investigation commenced under section 732(a). Accordingly, the Commission, effective September 8, 1980, instituted preliminary antidumping investigation No. 731–TA–30 (preliminary). This investigation will be subject to the provisions of part 207 of the Commission's Rules of Practice and Procedure (19 CFR 207, 44 F.R. 76457) and, particularly, subpart B thereof, effective January 1, 1980.

WRITTEN SUBMISSIONS

Any person may submit to the Commission on or before October 6, 1980, a written statement of information pertinent to the subject matter of this investigation. A signed original and 19 copies of such statements must be submitted.

Any business information which a submitter desires the Commission to treat as confidential shall be submitted separately and each sheet must be clearly marked at the top "Confidential business data." Confidential submissions must conform with the requirements of section 201.6 of the Commission's Rules of Practice and Procedure (19 CFR 201.6). All written submissions, except for confidential business data, will be available for public inspection.

CONFERENCE

The Director of Operations of the Commission has scheduled a conference in connection with this investigation for 10 a.m., e.d.t., on October 1, 1980, at the U.S. International Trade Commission Building, 701 E Street N.W., Washington, D.C. Parties wishing to participate in the conference should contact the supervisory investigator for the investigation, Mr. Lynn Featherstone; 202–523–1376. It is anticipated that parties in support of the petition for antidumping duties and parties opposed to such petition will each be collectively allocated 1 hour within which to make an oral presentation at the conference. Further details concerning the conduct of the conference will be provided by the supervisory investigator.

INSPECTION OF PETITION

The petition filed in this case is available for public inspection at the Office of the Secretary, U.S. International Trade Commission, and at the Commission's New York City Office, located at 6 World Trade Center.

By order of the Commission:

Issued: September 17, 1980.

KENNETH R. MASON,
Secretary.

Index

U.S. Customs Service

Treasury decisions:

	T.D. No.
Daily rates for countries not on quarterly list; foreign currencies	80-233
Instrument of international traffic	80-234
Manmade fiber textile products—restriction on entry	80-235
Customs regulations amended, section 123.9 relating to discrepancies in manifests, etc	80-236
Customs regulations amended—sections 4.7 and 4.14—foreign repairs to, and equipment purchases by, American vessels	80-237
Daily rates for countries not on quarterly list; foreign currencies	80-238

Customs Court

Antidumping:
- Determination:
  - Documents, confidentiality of, C.R.D. 80-11
  - Regional injury, C.R.D. 80-10
- International Trade Commission determination, C.R.D. 80-10

Atomet 20 plus additives; powder, sponge iron, C.D. 4872
Blended powders; sponge iron powder, C.D. 4872
Chromium, C.D. 4872
Confidential documents, access to; memorandum opinion and order, C.R.D. 80-10
Construction:
- Tariff Act of 1930:
  - Par. 3, C.D. 4872
  - Par. 335, C.D. 4872
  - Sec. 1516 a(a)(2), C.R.D. 80-10
- Tariff Schedules of the United States:
  - Item 608.02, C.D. 4872
  - Item 608.05, C.D. 4872
  - Schedule 6, part 2, subpart B:
    - Headnote 2(g), C.D. 4872
    - Headnote 2(h), C.D. 4872
    - Headnote 4, C.D. 4872
- United States Code, title 19:
  - Sec. 1516a(a)(2), C.R.D. 80-10
  - Sec. 1516a(b)(B), C.R.D. 80-10
  - Sec. 1677(4)(c), C.R.D. 80-10

Cross-motion for protective order, C.R.D. 80-10
Documents:
- Confidential, C.R.D. 80-10
- Confidentiality of; antidumping determination, C.RD. 80-11

Executive privilege claim; privileged documents, motion for order protecting, C.R.D. 80-11

International Trade Commission determination; antidumping, C.R.D. 80-10
Iron powder; sponge iron powder, C.D. 4872
Judgment in appealed case (p.—):
    Appeal 79-40—Solution administration sets; medical apparatus; tubing of rubber or plastics suitable for conducting liquids; TSUS; summary judgment
Legislative history:
    Tariff Classification Study, 1960:
        Explanatory and Background Materials, schedule 6, pp. 32, 47, 86, 88, 92, 687-688, C.D. 4872
        First Supplemental Report, 1962, pp. 150-151, C.D. 4872
Memorandum opinion and order; confidential documents, access to, C.R.D. 80-10
Molybdenum, C.D. 4872
Motion for access to confidential documents. C.R.D. 80-10
Other powders other than alloy iron or steel, C.D. 4872
Powder, sponge iron; Atomet 28 plus additives, C.D. 4872
Powders:
    Blended, C.D. 4872
    Unalloyed, C.D. 4872
Privileged documents, motion for order protecting; executive privilege claim, C.R.D. 80-11
Protective order, cross-motion for, C.R.D. 80-10
Regional injury; antidumping determination, C.R.D. 80-10
Sponge iron powder:
    Blended powders, C.D. 4872
    Iron powder, C.D. 4872
Tungsten, C.D. 4872
Unalloyed powders, C.D. 4872
Vanadium, C.D. 4872
Words and phrases; regional injury, C.R.D. 80-11

U.S. GOVERNMENT PRINTING OFFICE : 1980 O - 328-837

328-838 Item 950-DT 1.11/3:14/42
378 & contin

Customs Bulletin

Regulations, Rulings, Decisions, and Notices concerning Customs and related matters

and Decisions

of the United States Court of Customs and Patent Appeals and the United States Customs Court

9247

Vol. 14 | OCTOBER 15, 1980 | No. 42

This issue contains

T.D. 80–239 through 80–243
General Notice
C.D. 4873 and 4874
C.R.D. 80–12
ERRATUM
International Trade Commission Notices

THE DEPARTMENT OF THE TREASURY
U.S. Customs Service

NOTICE

The abstracts, rulings, and notices which are issued weekly by the U.S. Customs Service are subject to correction for typographical or other printing errors. Users may notify the U.S. Customs Service, Logistics Management Division, Washington, D.C. 20229, of any such errors in order that corrections may be made before the bound volumes are published.

For sale by the Superintendent of Documents, U.S. Government Printing Office, Washington, D.C. 20402. Price: $2.25 (single copy domestic); $2.85 (single copy foreign). Subscription price: $85.00 a year domestic; $106.25 a year foreign.

U.S. Customs Service

Treasury Decisions

(T.D. 80–239)

Customs Delegation Order No. 61

Order of the Commissioner of Customs delegating authority under the Federal Claims Collection Act of 1966, 31 U.S.C. 951, et seq., to certain Customs officers

By virtue of the authority vested in me by 31 CFR 5.3, I hereby delegate to the Regional Commissioners of Customs my authority pursuant to the Federal Claims Collection Act of 1966, 31 U.S.C. 951, et seq., to suspend or terminate collection actions on claims which do not exceed $20,000 exclusive of interest. The suspension or termination of collection actions pursuant to this delegation shall be made upon the recommendation of the Regional Counsel for any claim in which the unpaid amount of the debt is more than $100, in conformity with 31 CFR 5.3, and shall be in accordance with regulations issued jointly by the Department of Justice and the General Accounting Office (4 CFR 104.2, 104.3).

WILLIAM T. ARCHEY,
Commissioner of Customs.

(T.D. 80–240)

Bonds

Approval and discontinuance of Carriers bonds, Customs form 3587

Bonds of carriers for the transportation of bonded merchandise have been approved or discontinued as shown below. The symbol "D" indicates that the bond previously outstanding has been discontinued on the month, day, and year represented by the figures which follow. "PB" refers to a previous bond, dated as represented by figures in parentheses immediately following, which has been discontinued. If the previous bond was in the name of a different company or if the

surety was different, the information is shown in a footnote at the end of the list.

Dated: September 25, 1980.

Name of principal and surety	Date of bond	Date of approval	Filed with district director/area director/amount
Charles Arnett, 2107 West 12th St., Corsicana, TX; motor carrier; Lawyers Surety Corp. D 8/18/80	Apr. 19, 1976	Apr. 19, 1976	Houston, TX $25,000
Cajun Cartage and Warehousing Corp., 1400 Toulouse St., New Orleans, LA; motor carrier; Fireman's Fund Ins. Co.	July 29, 1980	July 30, 1980	New Orleans, LA $25,000
Quentin Tuggle; dba California Western, 3325 Linden Ave., Long Beach, CA; motor carrier; The Ohio Casualty Ins. Co. (PB 7/14/76) D 7/28/80 [1]	July 14, 1980	July 29, 1980	Los Angeles, CA $50,000
Gatien Transport, Inc., P.O. Box 326, Lacolle, Quebec, Canada J0J 1J0; motor carrier; The Hanover Ins. Co.	Sept. 5, 1979	Aug. 15, 1980	Ogdensburg, NY $25,000
Giannini Trucking Co., Inc., (A New York Corp) 87 Page Ave., Yonkers, NY; motor carrier; Peerless Inc. Co. (A New Hampshire Corp)	July 24, 1980	July 29, 1980	New York Seaport $25,000
Hall Systems, Inc., 214 South Tenth St., Birmingham, AL; motor carrier; Insurance Co. of North America	Apr. 2, 1980	July 25, 1980	New Orleans, LA $25,000
Dale Jessup, Inc., R.R. No. 1, Box 252, Camby, Indiana; motor carrier; American States Ins. Co.	Aug. 15, 1980	Aug. 19, 1980	Cleveland, Ohio $50,000
King Delivery, Inc., 5600 West Arbor Vitae, Los Angeles, CA; motor carrier; Liberty Mutual Ins. Co. (PB 5/20/77) D 7/15/80 [2]	Apr. 10, 1980	July 16, 1980	Los Angeles, CA $50,000
Smith Transportation Co., 731 S. Lincoln, Santa Maria, CA; motor carrier; Hartford Accident & Indemnity Co. D 7/16/80	Nov. 29, 1978	Dec. 20, 1978	Los Angeles, CA $50,000
Star Transport Co., Inc., 4730 Hollins Ferry Rd., Baltimore, MD; motor carrier; Fireman's Fund Ins. Co. D 2/8/78	Dec. 2, 1972	Dec. 29, 1972	Baltimore, MD $25,000
CTD, Inc., dba Statewide Haulers, Inc., 1800 Chicago, Laredo, TX; motor carrier; Royal Indemnity Co.	July 14, 1980	Aug. 5, 1980	Laredo, TX $25,000
Truck Air of Georgia, Inc., 576 Lake Mirror Rd., College Park, GA; motor carrier; U.S. Fidelity & Guaranty Co. (PB 4/6/79) D 4/6/80	Apr. 6, 1980	Apr. 6, 1980	Savannah, GA $25,000
Westransco Freight Co., 1041 Richmond St., Los Angeles, CA; motor carrier; Mid-Century Ins. Co. (PB 3/8/77) D 7/15/80 [3]	May 30, 1980	July 16, 1980	Los Angeles, CA $50,000

See footnotes at end of table.

Name of principal and surety	Date of bond	Date of approval	Filed with district director/area director/amount
World Wide Theatrical Rentals, Inc., 695 South Glenwood, Burbank, CA; Washington International Ins. Co.	May 19, 1980	Aug. 11, 1980	Los Angeles, CA $50,000

[1] Surety is Pacific Employers Ins. Co.
[2] Surety is Washington International Ins. Co.
[3] Surety is Safeco Insurance Co. of America.

BON-3-03

ALFRED G. SCHOLLE,
Director,
Carriers, Drawback and Bonds Division.

(T.D. 80-241)

Bonds

Approval and discontinuance of Carriers bonds, Customs form 3587

Bonds of carriers for the transportation of bonded merchandise have been approved or discontinued as shown below. The symbol "D" indicates that the bond previously outstanding has been discontinued on the month, day, and year represented by the figures which follow. "PB" refers to a previous bond, dated as represented by figures in parentheses immediately following, which has been discontinued. If the previous bond was in the name of a different company or if the surety was different, the information is shown in a footnote at the end of the list.

Dated: September 26, 1980.

Name of principal and surety	Date of bond	Date of approval	Filed with district director/area director/amount
AAA Transfer, Inc., 615 S. 96th, Seattle, WA; motor carrier; Mid Century Ins. Co. (PB 9/1/78) D 7/29/80 [1]	Jan. 1, 1980	July 30, 1980	Seattle, WA $25,000
Best Way Transport, Inc., dba Best Transport Co., 3841 N. Columbia Blvd., Portland, OR; motor carrier; Midland Ins. Co. (PB 8/17/79) D 8/17/80 [2]	Aug. 8, 1980	Aug. 19, 1980	Portland, OR $25,000
Coast Carloading Co., 1041 Richmond St., Los Angeles, CA; motor carrier; Safeco Ins. Co. of America D 8/26/80	Apr. 22, 1975	Aug. 19, 1975	Los Angeles, CA $50,000

See footnotes at end of table.

Name of principal and surety	Date of bond	Date of approval	Filed with district director/area director/amount
The Copeland Co., Inc., 512 Southeast 32 Court, Ft. Lauderdale, FL; motor carrier; Washington International Ins. Co.	July 16, 1980	Aug. 26, 1980	Miami, FL $25,000
Farruggio's Bristol & Phila. Auto Express, Inc., 1419 Radcliffe St., Bristol, PA: motor carrier; Reliance Ins. Co. D 10/1/80	Oct. 5, 1979	Nov. 26, 1979	Philadelphia, PA $50,000
Wm. H.P., Inc., 1345 N. Mascher St., Phila., PA; motor carrier; Aetna Casualty & Surety (PB 2/25/77) D 6/14/80 [3]	June 14, 1980	June 24, 1980	Philadelphia, PA $25,000
Hardwicke's Ammex Ltd., 8685 N. West 53rd Terrace, Miami, Fla.; motor carrier; Fireman's Fund Ins. Co.	Aug. 1, 1980	Aug. 1, 1980	Portland, ME $50,000
Maislin Transport Ltd., Maislin Transport of Delaware Inc. and Port Express Int'l, Inc., 530 Haunted Lane, Cornwells Heights, PA; motor carrier; Globe Indemnity Co. (PB 1/31/78) D 1/3/80 [4]	Oct. 25, 1979	Jan. 3, 1980	Philadelphia, PA $150,000
National Marine Service, Inc., 3710 Dacoma, Houston, TX; water carrier; Insurance Co. of North America (PB 2/8/68) D 2/8/80 [5]	Feb. 8, 1980	Feb. 8, 1980	Houston, TX $50,000
Riclyn Enterprises, Inc., 4300 SW 6th St., Plantation, FL; motor carrier; St. Paul Fire & Marine Ins. Co.	Aug. 20, 1980	Aug. 22, 1980	Miami, FL $25,000
Rothery Storage & Van Co., 1525 Chase Ave., Elk Grove Village, Il., motor carrier; Mid-Century Ins. Co.	June 10, 1980	July 7, 1980	Chicago, Il. $25,000
Royal Transportation Co., Inc., 600 S. Maple Ave., Montebello, CA; motor carrier; American Bonding Co. D 8/26/80	July 24, 1977	Oct. 14, 1977	Los Angeles, CA $50,000
Seminole Transport Lines, Inc., P.O. Box 792, Miami, Fl., motor carrier; National Indemnity Co. D 5/2/80	Mar. 2, 1972	Mar. 2, 1972	Miami, Fl. $25,000
Tennessee Cartage Co., Inc., P.O. Box 23193, Nashville, TN; motor carrier; Safeco Ins. Co. of America	Aug. 19, 1980	Aug. 19, 1980	Nashville, TN $25,000
Wolverine Express, Inc., c/o McLean Trucking Co., 617 Waughtown St., Winston-Salem, NC; motor carrier; Fidelity and Deposit Co. of MD D 8/26/80	Apr. 3, 1978	Apr. 3, 1978	Chicago, Il. $25,000

[1] Surety is Safeco Ins. Co. of America.
[2] Surety is Mid-Century Ins. Co.
[3] Surety is Fidelity & Deposit Co.
[4] Principal is Maislin Transport of Delaware, Inc.
[5] Surety is Federal Ins. Co.

BON-3-03

ALFRED G. SCHOLLE,
Director,
Carriers, Drawback and Bonds Division.

(T. D. 80–242)

Bonds

Approval of a Carrier's bond, Customs form 3587

A bond of a carrier for the transportation of bonded merchandise has been approved as shown below. The approval of the bond is temporary until November 30, 1980.

Dated: September 29, 1980.

Name of principal and surety	Date of bond	Date of approval	Filed with district director/area director/amount
Norwood Transport, Inc., division of Nettleton Enterprises Co., Inc., Route 1, Elgin, Il.; motor carrier; Aetna Casualty and Surety Co.	Dec. 18, 1979	July 14, 1980	Chicago, Il. $35,000

BON–3–03

ALFRED G. SCHOLLE,
Director,
Carriers, Drawback and Bonds Division.

(T.D. 80–243)

Synopses of Drawback Decisions

The following are synopses of drawback rates issued May 21, 1980, to June 24, 1980, inclusive, pursuant to sections 22.1 through 22.5, inclusive, Customs Regulations.

In the synopses below are listed for each drawback rate approved under 19 U.S.C. 1313(b), the name of the company, the specified articles on which drawback is authorized, the merchandise which will be used to manufacture or produce these articles, the factories where the work will be accomplished, the date the statement was signed, the basis for determining payment, the Regional Commissioner to whom the rate was forwarded, and the date on which it was forwarded.

(DRA–1–09)

Dated: September 29, 1980.

ALFRED G. SCHOLLE,
Director,
Carriers, Drawback and Bonds Division.

(A) Company: Adams Packing Association, Inc.
Articles: Canned orange juice, chilled orange juice, and blended citrus juices.
Merchandise: Orange juice, frozen orange juice, and orange juice for manufacturing.
Factory: Auburndale, Fla.
Statement signed: May 16, 1980.
Basis of claim: Used in.
Rate forwarded to Regional Commissioner of Customs: Miami, June 10, 1980.

(B) Company: Alpac Corp.
Articles: Canned and bottled carbonated and noncarbonated beverages.
Merchandise: Hard and liquid refined sugar and liquid refined invert sugar.
Factory: Seattle, Wash.
Statement signed: May 25, 1979.
Basis of claim: Used in.
Rate forwarded to Regional Commissioner of Customs: New York, June 12, 1980.
Revokes: T.D. 54093–D, as amended by T.D.'s 56436–L, 56495–B, 67–66–N, 69–144–S, 73–236–T, and 74–149–D.

(C) Company: Aluminum Co. of America.
Articles: Atomized aluminum granules and powder grades; aluminum flake powder and aluminum pigments.
Merchandise: Atomized aluminum powder.
Factories: Logans Ferry, Pa., Rockdale, Tex., and Alcoa, Tenn.
Statement signed: May 7, 1980.
Basis of claim: Appearing in.
Rate forwarded to Regional Commissioner of Customs: New York, June 10, 1980.

(D) Company: Carolina Canners, Inc.
Articles: Canned and bottled carbonated and noncarbonated beverages.
Merchandise: Hard and liquid refined sugar; liquid refined invert sugar.
Factory: Cheraw, S.C.
Statement signed: October 23, 1979.
Basis of claim: Used in.
Rate forwarded to Regional Commissioner of Customs: New York, June 12, 1980.

(E) Company: Citrus World, Inc.
Articles: Bulk concentrated orange juice.
Merchandise: Concentrated orange juice for manufacturing.
Factory: Lake Wales, Fla.
Statement signed: March 20, 1980.
Basis of claim: Used in.
Rate forwarded to Regional Commissioner of Customs: Miami, June 6, 1980.

(F) Company: Columbus McKinnon Corp.
Articles: Herc-alloy chains, alloy steel load chain, rings, master links, S-hooks, unwelded coupling links, and piece-up links.
Merchandise: Hot-rolled steel bars and rods; hot-rolled steel, and cold-finished steel.
Factory: Tonawanda, N.Y.
Statement signed: December 18, 1979.
Basis of claim: Used in, less valuable waste.
Rate forwarded to Regional Commissioner of Customs: Boston, June 12, 1980.

(G) Company: Data General Corp.
Articles: Computer systems, computer subsystems, peripheral computer equipment, semiconductor memory boards.
Merchandise: 16 K Dynamic Ram and 4K Static Ram (random access memory).
Factories: Southboro, Mass., Westbrook, Maine, Cary, N.C., Portsmouth, N.H., and Austin, Tex.
Statement signed: January 8, 1980.
Basis of claim: Appearing in.
Rate forwarded to Regional Commissioner of Customs: San Francisco, May 21, 1980.

(H) Company: Dean Foods Co.
Articles: Nondairy creamer.
Merchandise: Refined coconut oil.
Factories: Various factories as listed in manufacturer's statement.
Statement signed: April 15, 1980.
Basis of claim: Used in.
Rate forwarded to Regional Commissioner of Customs: Los Angeles, May 21, 1980.

(I) Company: The Dow Chemical Co.
Articles: Chlorothene NU, Chlorothene VG, Chlorothene NU inhibitor concentrate, and Dowclene EC.
Merchandise: Methyl butynol.

328-838 O - 80 - 2

Factory: Freeport, Tex.
Statement signed: March 13, 1980.
Basis of claim: Appearing in.
Rate forwarded to Regional Commissioner of Customs: Chicago, June 12, 1980.

(J) Company: EZ Loader Boat Trailers, Inc.
Articles: Boat trailers.
Merchandise: Welded tubular steel.
Factory: Spokane, Wash.
Statement signed: April 14, 1980.
Basis of claim: Appearing in.
Rate forwarded to Regional Commissioner of Customs: San Francisco, June 23, 1980.

(K) Company: Eastman Kodak Co.
Articles: Polyester polymer pellets, continuous filament yarn, and staple fiber.
Merchandise: Ethylene glycol (EG).
Factories: Kingsport, Tenn. and Columbia, S.C.
Statement signed: March 31, 1980.
Basis of claim: Appearing in.
Rate forwarded to Regional Commissioner of Customs: Houston, June 5, 1980.
Revokes: T.D. 74–300–M.

(L) Company: Eli Lilly and Co.
Articles: Herbicides.
Merchandise: p-chlorobenzotriflouride (PCBT).
Factory: Layfette, Ind.
Statement signed: April 3, 1980.
Basis of claim: Used in.
Rate forwarded to Regional Commissioner of Customs: Chicago, May 30, 1980.

(M) Company: McGraw-Edison Co.
Articles: Evaporative air and fan coolers and parts.
Merchandise: Galvanized steel coil.
Factories: Phoenix and Scotsdale, Ariz.
Statement signed: March 17, 1980.
Basis of claim: Appearing in.
Rate forwarded to Regional Commissioners of Customs: New York and Chicago, June 12, 1980.

(N) Company: Merck & Co., Inc.
Articles: Hydroxyquinoline.

Merchandise: Quinoline refined.
Factory: Hawthorne, N.J.
Statement signed: January 16, 1980.
Basis of claim: Used in.
Rate forwarded to Regional Commissioner of Customs: New York, June 12, 1980.

(O) Company: Monsanto Co.
Articles: USP vanillin.
Merchandise: 4-hydroxy-3-methoxybenzaldehyde (technical vanillin).
Factory: Seattle, Wash.
Statement signed: January 25, 1980.
Basis of claim: Used in.
Rate forwarded to Regional Commissioners of Customs: Chicago and New York, June 3, 1980.

(P) Company: Monsanto Co.
Articles: Thermoplastics (Lustran ® ABS 446, ABS 240; CB 990 polymer).
Merchandise: Acrylonitrile-butadiene-styrene terpolymer resin (SGL-40UX).
Factory: Addyston, Ohio.
Statement signed: April 22, 1980.
Basis of claim: Appearing in.
Rate forwarded to Regional Commissioners of Customs: Chicago and New York, May 30, 1980.

(Q) Company: Osmose Wood Preserving Co. of America, Inc.
Articles: Wood preservatives.
Merchandise: Cupric oxide.
Factory: Memphis, Tenn.
Statement signed: April 29, 1980.
Basis of claim: Used in.
Rate forwarded to Regional Commissioner of Customs: New York, June 23, 1980.

(R) Company: PPG Industries, Inc.
Articles: Antifreeze.
Merchandise: Ethylene glycol (technical and antifreeze grades).
Factory: Richmond, Calif.
Statement signed: October 18, 1979.
Basis of claim: Used in.
Rate forwarded to Regional Commissioner of Customs: New York, June 24, 1980.
Revokes: T.D. 76-344-O and T.D. 76-344-X.

(S) Company: Perma Grain Products, Inc.
Articles: Acrylic impregnated flooring tiles.
Merchandise: Red oak kiln-dried blanks.
Factory: Karthaus, Pa.
Statement signed: December 6, 1979.
Basis of claim: Used in.
Rate forwarded to Regional Commissioner of Customs: Baltimore, June 23, 1980.

(T) Company: Republic Steel Corp.
Articles: Hot-rolled steel specialty sections.
Merchandise: Ferromanganese.
Factories: Warren, Canton, and Youngstown, Ohio; Chicago, Ill., and Buffalo, N.Y.
Statement signed: May 12, 1980.
Basis of claim: Appearing in.
Rate forwarded to Regional Commissioner of Customs: New York, May 30, 1980.
Revokes: T.D. 78-397-T.

(U) Company: Rohm & Haas Delaware Valley, Inc.
Articles: Goal (Rohm & Haas generic classification CEF).
Merchandise: 3,4 dichloro benzotrifluoride.
Factory: Philadelphia, Pa.
Statement signed: May 12, 1980.
Basis of claim: Used in.
Rate forwarded to Regional Commissioner of Customs: Baltimore, June 23, 1980.
Revokes: Section No. 49, T.D. 78-397-U.

(V) Company: Romanoff Caviar Co.
Articles: Caviar in tins and jars, fresh; caviar, vacuum packed, hermetically sealed in jars.
Merchandise: Whole grain caviar (Sevruga, Osetra, Beluga); pressed sturgeon caviar (all grades 1 and 2).
Factory: Teaneck, N.J.
Statement signed: May 1, 1980.
Basis of claim: Appearing in.
Rate forwarded to Regional Commissioner of Customs: New York, May 22, 1980.

(W) Company: Sayles Biltmore Bleacheries, Inc.
Articles: Bleached and printed and/or dyed piece goods.
Merchandise: Piece goods.
Factory: Asheville, N.C.

Statement signed: January 8, 1980.
Basis of claim: Used in, less valuable waste.
Rate forwarded to Regional Commissioner of Customs: New York, June 6, 1980.

(X) Company: A. O. Smith Corp. (Automotive Division).
Articles: Automobile passenger car and truck frames and subassemblies and parts thereof; front end control arms.
Merchandise: Hot-rolled carbon steel and special killed steel in plates and sheets.
Factories: Milwaukee, Wis., Milan, Tenn., and Granite City, Ill.
Statement signed: May 19, 1980.
Basis of claim: Appearing in.
Rate forwarded to Regional Commissioner of Customs: Chicago, June 6, 1980.

(Y) Company: White Consolidated Industries, Inc., the Bullard Co. Division.
Articles: Machine tools for metalworking, such as grinders, lathes, and chucking machines.
Merchandise: Bearings, ball screws, castings, and forgings; fasteners; electrical components, valves, cutting tools, and gears.
Factory: Bridgeport, Conn.
Statement signed: February 8, 1980.
Basis of claim: Appearing in.
Rate forwarded to Regional Commissioner of Customs: Boston, June 12, 1980.

(Z) Company: Witco Chemical Corp.
Articles: Overbased calcium sulfonate.
Merchandise: Highly overbased calcium sulfonate.
Factories: Petrolia and Chester, Pa., and Harvey, La.
Statement signed: December 12, 1979.
Basis of claim: Used in.
Rate forwarded to Regional Commissioner of Customs: New York, June 24, 1980.

U.S. Customs Service

General Notice

Proposed Amendment to the Customs Regulations Relating to the Importation of Motor Vehicles and Motor Vehicle Engines Under the Clean Air Act; Extension of Time for Public Comment

AGENCY: U.S. Customs Service, Department of the Treasury.

ACTION: Notice of extension of time for comments.

SUMMARY: This notice extends the period of time within which interested members of the public may submit comments with respect to a proposal to amend section 12.73, Customs Regulations (19 CFR 12.73), relating to the importation of motor vehicles and motor vehicle engines under the Clean Air Act, as amended (42 U.S.C. 7521). A document inviting the public to comment on this proposal was published in the Federal Register on July 21, 1980 (45 F.R. 48817). Comments were to have been received on or before September 19, 1980. However, in a document published in the Federal Register on September 22, 1980 (45 F.R. 62851), the Environmental Protection Agency announced the scheduling of a public hearing on, and an extension of time in which to submit comments concerning, a proposal to amend their regulations in 40 CFR, part 85, subpart P. Inasmuch as any changes in EPA regulations may necessitate like changes in the Customs Regulations, this extension, which corresponds to that granted by EPA, will permit the preparation and submission of more detailed comments by interested members of the public.

DATES: Comments must be received on or before December 3, 1980.

ADDRESS: Comments, preferably in triplicate, should be addressed to the Commissioner of Customs, attention: Regulations and Research Division, room 2426, U.S. Customs Service, 1301 Constitution Avenue NW., Washington, D.C. 20229.

FOR FURTHER INFORMATION CONTACT: Harrison C. Feese, Entry, Examination, and Liquidation Branch, U.S. Customs Service,

1301 Constitution Avenue NW., Washington, D.C. 20229; 202-566-8651.

Dated: September 25, 1980.

ALFRED G. SCHOLLE
(For Director, Office of
Regulations and Rulings).

[Published in the Federal Register, Oct. 2/m, 1980 (45 F.R. 3/m)]

Decisions of the United States Customs Court

United States Customs Court

One Federal Plaza
New York, N.Y. 10007

Chief Judge

Edward D. Re

Judges

Paul P. Rao
Morgan Ford
Scovel Richardson
Frederick Landis
James L. Watson
Herbert N. Maletz
Bernard Newman
Nils A. Boe

Senior Judge

Samuel M. Rosenstein

Clerk

Joseph E. Lombardi

Customs Decisions

(C.D. 4873)

CARLINGSWITCH, INC., PLAINTIFF, *v.* UNITED STATES, DEFENDANT

On Defendant's Motion To Dismiss or in the Alternative for Summary Judgment and on Plaintiff's Cross-Motion for Summary Judgment

Court No. 79-12-01947

[Defendant's motion for summary judgment granted; plaintiff's cross-motion for summary judgment denied.]

(Decided September 18, 1980)

Shaw and Stedina (*Charles P. Deem* on the memorandum) for the p'aintiff.

Alice Daniel, Assistant Attorney General; *Joseph I. Liebman*, Attorney in Charge, Field Office for Customs Litigation (*Jerry P. Wiskin* on the memorandum) for the defendant.

MALETZ, Judge: Plaintiff voluntarily tendered $91,992.35 to Customs in connection with a penalty investigation under section 592 of the Tariff Act of 1930, as amended (19 U.S.C. 1592) for understating the value of certain shipments of switches, indicator lights, and related products. Subsequently, Customs refused to refund the moneys thus tendered. Plaintiff then brought this action to obtain recovery.

Defendant has moved to dismiss the action or alternatively for summary judgment on the ground that Customs' refusal to refund the moneys tendered does not constitute an "exaction" within the meaning of section 514(a)(3) of the Tariff Act of 1930, as amended (19 U.S.C. 1514(a)(3))[1] and that the court therefore lacks jurisdiction. Also relevant is 28 U.S.C. 1582 which delineates the jurisdiction of the court and provides in part:

Plaintiff, on the other hand, contends that by virtue of sections 520(a)(3) of the Tariff Act of 1930, as amended (19 U.S.C. 1520(a)(3))[2] and 514(a)(3), Customs' refusal to refund the additional duties thus voluntarily tendered amounts to an "exaction" within the meaning of section 514(a)(3); that the court therefore has jurisdiction; and that plaintiff is entitled to summary judgment on its cross-motion.

For the reasons that follow, the court concludes that the court lacks jurisdiction and therefore dismisses the action.

The facts giving rise to the controversy are undisputed. They are as follows; During the period from July 9, 1970, to January 29, 1974, plaintiff imported switches, indicator lights, and other related materials which were assembled in Mexico from U.S. products. The merchandise

---

[1] 19 U.S.C. 1514 reads in part:

(a) Except as provided in section 1501 of this title (relating to voluntary reliquidations), section 1516 of this title (relating to petitions by American manufacturers, producers, and wholesalers), section 1520 of this title (relating to refunds and errors), and section 1521 of this title (relating to reliquidations on account of fraud), decisions of the appropriate Customs officer, including the legality of all orders and findings entering into the same, as to—

(1) the appraised value of merchandise;

(2) the classification and rate and amount of duties chargeable;

(3) all charges or exactions of whatever character within the jurisdiction of the Secretary of the Treasury;

* * * * * * * *

shall be final and conclusive upon all persons (including the United States and any officer thereof) unless a protest is filed in accordance with this section, or unless a civil action contesting the denial of a protest, in whole or in part, is commenced in the U.S. Customs Court in accordance with section 2632 of title 28 within the time prescribed by section 2631 of that title.

(a) The Customs Court shall have exclusive jurisdiction of civil actions instituted by any person whose protest pursuant to the Tariff Act of 1930, as amended, has been denied, in whole or in part, by the appropriate Customs officer, where the administrative decision, including the legality of all orders and findings entering into the same, involves: (1) the appraised value of merchandise; (2) the classification and rate and amount of duties chargeable; (3) all charges or exactions of whatever character within the jurisdiction of the Secretary of the Treasury, * * *.

[2] 19 U.S.C. 1520(a)(3) provides in part:

(a) The Secretary of the Treasury is authorized to refund duties or other receipts in the following cases:

* * * * * * *

(3) *Fines, penalties, and forfeitures.*—Whenever money has been deposited in the Treasury on account of a fine, penalty, or forfeiture which did not accrue, or which is finally determined to have accrued in an amount less than that so deposited, or which is mitigated to an amount less than that so deposited or is remitted.

328-838 O - 80 - 3

was entered as assembled articles under item 807.00 of the Tariff Schedules of the United States (TSUS).[3]

Valuation of assembled articles under item 807.00 is usually on the basis of constructed value or cost of production (19 CFR 10.18). Thus, where an entry is made under item 807.00, cost data for the assembled article and its U.S. components must be furnished for valuation purposes. If upon entry the costs are estimated by the importer, after entry such estimated costs must be updated and the actual costs furnished as soon as possible (19 CFR 10.21). With these considerations in mind, on November 27, 1973, plaintiff submitted actual cost sheets to the Customs Service. The Regulatory Audit Unit of Customs reviewed these cost sheets and concluded on January 17, 1974, that the unit values on the invoices at the time of entry were understated. Shortly thereafter, on February 25, 1974, the entries were liquidated at the entered values.

On May 28, 1974, plaintiff tendered a deposit of $41,992.35 to Customs and on April 23, 1976, tendered an additional deposit of $50,000 to Customs. These tenders in the total amount of $91,992.35 were made by plaintiff on its own initiative and without request or demand by Customs in order to limit its potential penalty liability by complying with the voluntary disclosure practice of Customs. More particularly, the tender was made pursuant to an established practice of Customs—that was later embodied in 19 CFR 171.1(a) (effective Jan. 16, 1975)—under which a voluntary disclosure of violations of the Customs laws, accompanied by a deposit of an amount equal to the total loss of revenue to the Government will, in specified circumstances, result in the Customs Service's mitigating the penalty to an amount not exceeding the Government's total loss of revenue.

---

[3] The pertinent provisions of schedule 8, part 1, subpart B of TSUS pertaining to assembled articles read as follows:

Subpart B headnotes:

* * * * * * *

3. *Articles assembled abroad with components produced in the united States.*—The following provisions apply only to item 807.00:

(a) The value of the products of the United States assembled into the imported article shall be—

(i) the cost of such products at the time of the last purchase: or

(ii) if no charge is made, the value of such products at the time of the shipment for exportation, as set out in the invoice and entry papers; except that, if the appraiser concludes that the amount so set out does not represent a reasonable cost or value, then the value of such products shall be determined in accordance with section 402 or 402a of this Act.

(b) The duty on the imported article shall be at the rate which would apply to the imported article itself, as an entirety without constructive separation of its components, in its condition as imported if it were not within the purview of this subpart. If the imported article is subject to a specific or compound rate of duty, the total duties shall be reduced in such proportion as the cost or value of such products of the United States bears to the full value of the imported article.

* * * * * * *

807.00	Articles assembled abroad in whole or in part of products of the United States which were exported for such purpose and which have not been advanced in value or improved in condition abroad by any means other than by the act of assembly	A duty upon the full value of the imported article, less the cost or value of such products of the United States (see headnote 3 of this subpart).

Subsequently, on January 6, 1977, Customs demanded payment of $7,926,778 from plaintiff as forfeiture value on the basis of (1) the undervaluation of the merchandise; (2) false freight figures; and (3) the failure to report the true constructed value figures. In response to this demand for payment, plaintiff, on November 16, 1977, filed a petition under section 618 of the Tariff Act of 1930, as amended (19 U.S.C. 1618) for remission or mitigation of the claim for forfeiture value. Some 18 months later, on June 15, 1979, Customs notified plaintiff that although the merchandise was, through false invoices, undervalued in the amount of $174,573.21, the statute of limitations had run out on January 28, 1979, on all entries and that the claim for forfeiture value was therefore remitted in its entirety.

On June 29, 1979, plaintiff requested a refund of its deposit of $91,992.35. This request was denied by the District Director of Customs on August 6, 1979. In his letter of denial the District Director informed plaintiff that although the penalty of $7,926,778 was barred by the statute of limitations, the actual loss of revenue to the Government was $174,573.21 and that he assumed that the $91,992.35 had been tendered by plaintiff to cover part of that loss.

On October 22, 1979, plaintiff filed a protest against the refusal to refund the $91,992.35 which protest was denied on December 11, 1979. Suit in this court followed.

Against this background, plaintiff argues that section 514(a)(3) should be construed so as to interpret the term "exaction" therein to cover the refusal by Customs to refund the deposits herein issue. However, there are several difficulties with this argument. In the first place, plaintiff's argument is at odds with the plain meaning of the term "exaction." For the following dictionary definitions make clear that an "exaction" is involved only where there is a demand for or the compelling of payment:

The Random House Dictionary of the English Language (1969):

> Exaction—1. the act of exacting; extortion * * * 2. something exacted * * * a demanding.

The term "exact" is defined as (ibid):

> Exact.— * * * 6. to call for, demand, or require * * *.7. to force or compel payment, yielding, or performance of * * *.

Black's Law Dictionary (1968):

> Exaction.—The wrongful act of an officer or other person in *compelling* payment of a fee or reward for his services, under color of his official authority, where no payment is due. [Ital. added.]

Webster's New Twentieth Century Dictionary of the English Language (unabridged, 2d ed.) (1959):

> Exaction, n. [L. exactio (-onis), a driving out, expelling, a tax, tribute, from exactus pp. of exigere, to drive out, demand, exact.]

> 1. An exacting, as of strength, money, time, etc.; the act of demanding with authority and compelling to pay or yield; or levying or drawing from by force; a driving to compliance; as, the *exaction* of tribute or of obedience.
> 2. An excessive demand; extortion.
> 3. That which is exacted; an enforced fee, tax, etc.

In light of the foregoing definitions, plaintiff's payment of the moneys in question voluntarily and without legal obligation or compulsion can hardly constitute an exaction. At the very least, to constitute an exaction under section 514(a)(3) there would have had to have been some compulsion on the part of Customs requiring plaintiff to have paid the moneys. That there was no such compulsion here is manifest from the record. Indeed, at the time the tenders were made by plaintiff, no penalty was even asserted against plaintiff let alone any demand for payment.

Nor does the refusal of Customs to refund the moneys plaintiff tendered to it constitute an exaction. As this court stated in *Alberta Gas Chemicals, Inc.* v. *Blumenthal*, 82 Cust. Ct. 77, 81–2, C.D. 4792, 467 F. Supp. 1245, 1249–50 (1979):

> [F]rom a review of a long line of cases involving "charges" and "exactions," it is obvious that these terms have been applied to *actual assessments of specific sums of money* (other than ordinary customs duties) on imported merchandise. * * * In the instant case, there has been no assessment of any "charge" or "exaction," nor any order or finding entering into a charge or exaction. [Italic added.]

The considerations thus set out in *Alberta Gas* are equally applicable here.

Plaintiff next argues that the term "exaction" in section 514(a)(3) should be construed broadly so as to cover the refusal by Customs to refund the deposits in issue. Otherwise, plaintiff says, judicial review would be unavailable. In this connection, plaintiff states (correctly) that there is no specific provision for protesting a refusal to refund money deposited in the Treasury on account of a fine, penalty, or forfeiture which is subject to remission. However, it maintains that Congress would not enact this statute without providing for judicial review of the correctness of the decisions thereunder. The short answer is that the appropriate district court—and not this court—has jurisdiction under section 592 of the Tariff Act of 1930, as amended (19 U.S.C. 1592) to judicially review the correctness of the decisions of the Customs Service in penalty cases. See, e.g., *Sheldon & Co. et al.* v. *United States*, 8 Ct. Cust. Appls. 215, 218, T.D. 37455 (1917); *M. M. Scher & Sons, Inc.* v. *United States*, 24 Cust. Ct. 243, C.D. 1241 (1950). See also, e.g., Senate Finance Committee Report on H.R. 8149, the Customs Procedural Reform and Simplification Act of 1978 (S. Rep. No. 95–778, 95th Congress, 2d session 17–21).

In further support of its position that section 514 should be construed broadly to cover the deposits here in issue, plaintiff relies principally on *United States* v. *C. J. Tower & Sons of Buffalo, Inc.*, 61 CCPA 90, C.A.D. 1129,499 F. 2d 1277 (1974). In *Tower* the Court of Customs and Patent Appeals affirmed a decision of this court that the court had jurisdiction of a protest under section 520(c)(1) of the Tariff Act of 1930, as amended (19 U.S.C. 1520(c)(1)) against refusal to reliquidate to correct a mistake of fact even though section 514 did not specifically refer to a mistake of fact or inadvertence but only to clerical error. From what has been said, the *Tower* case clearly is irrelevant to any issue here.

Finally, plaintiff has moved to amend its complaint to include claims under sections 514(a)(1) and 514(a)(2) of the Tariff Act of 1930, as amended, which sections grant the court jurisdiction of denied protests covering the appraised value of merchandise and the classification and rate and amount of duties chargeable. Leaving aside the question of the timeliness of this motion—which was filed after defendant filed a motion to dismiss and an alternative motion for summary judgment—the case is a penalty case and not an appraisement or classification case. It is true that a penalty case may involve, among other things, questions of appraisement and classification. Such questions, however, must be resolved in the penalty proceeding and not in an appraisement or classification proceeding. In these circumstances, plaintiff's motion to amend the complaint by having the court treat the action as one for appraisement or classification is denied.

For the foregoing reasons, defendant's motion for summary judgment is granted; plaintiff's cross-motion for summary judgment is denied; and the action is hereby dismissed.

(C.D. 4874)

GODCHAUX-HENDERSON SUGAR CO., INC., PLAINTIFF, *v.* UNITED STATES, DEFENDANT

Nicaraguan Sugar—Generalized System of Preferences

Court No. 77-2-00257

SECTION 520(c)(1)—IMPORTER'S FAILURE TO ENTER MERCHANDISE PRIOR TO TERMINATION OF DUTY-FREE STATUS UNDER GSP DUE TO IGNORANCE OF GSP STATUS

By Executive Order 11906, the President terminated the duty-free status under the Generalized System of Preferences (19 U.S.C. 2461, et seq.) of a number of products, including Nicaraguan sugar, effective with respect to merchandise entered, or withdrawn from warehouse, for consumption on or after February 29, 1976. Plaintiff

imported Nicaraguan sugar on February 24, 1976, which was unladen at the Port of New Orleans under an immediate delivery permit, but no consumption entry was filed at that time. At the time of importation, plaintiff was not aware of the duty-free status of Nicaraguan sugar under the GSP. On March 3, 1976, plaintiff learned for the first time that the importation of Nicaraguan sugar could have been entered duty free under the GSP, but that the duty-free status of that merchandise terminated on February 29, 1976, by virtue of the Executive order. The shipment was entered as dutiable on March 9, 1976, and liquidated accordingly on May 14, 1976.

In this action, predicated upon section 520(c)(1) of the Tariff Act of 1930, as amended (19 U.S.C. 1520(c)(1)), plaintiff claims that its failure to enter the shipment duty-free prior to February 29, 1976 (the effective date of Executive Order 11906), was due to "clerical error, mistake of fact, or other inadvertence not amounting to an error in the construction of a law" within the meaning of the statute. In an opinion by Newman, J., *held:* Even assuming arguendo that the duty-free status of the merchandise under the GSP does not involve "construction of a law," which is excluded from relief under section 520(c)(1), plaintiff's failure to file a duty-free entry by the deadline prescribed by law is not within the scope of that section.

SECTION 520(c)(1)—MISTAKE OR INADVERTENCE IN "ENTRY"

By the express terms of section 520(c)(1), plaintiff was required to establish "a clerical error, mistake of fact, or other inadvertence * * * in [an] *entry, liquidation, or other customs transaction* * * * [Italic added.] There is nothing in either section 520(c)(1) or the legislative history cited by plaintiff which suggests that Congress intended the statute to be remedial in situations where, as here, the importer mistakenly or inadvertently failed to make an entry within the time limit prescribed by law to obtain duty-free treatment. In the present case, the merchandise was not entered until March 9, 1976, on which date the merchandise concededly was no longer eligible for duty-free treatment. Consequently, in plaintiff's dutiable entry on March 9, 1976, there was no mistake or inadvertence. Plaintiff's mistake or inadvertence was not in an *entry*, but rather in failing to make an entry prior to February 29, 1976. Had plaintiff, through mistake of fact or inadvertence, filed a dutiable entry prior to February 29, 1976 (when the merchandise concededly was duty free) and the entry was liquidated accordingly, the entry could be reliquidated duty free pursuant to section 520(c)(1). Cf. *C. J. Tower & Sons of Buffalo* v. *United States*, 68 Cust. Ct. 17, C.D. 4327, 336 F. Supp. 1395 (1972), *aff'd*, 61 CCPA 90, C.A.D. 1129, 499 F. 2d 1277 (1974).

SAME

Section 520(c)(1) is not remedial for every conceivable form of mistake or inadvertence adverse to an importer, but the statute offers "limited relief in the situations defined therein." *Phillips Petroleum Company* v. *United States*, 54 CCPA 7, 11, C.A.D. 893 (1966).

[Judgment for defendant.]

(Decided September 19, 1980)

Lord, Day & Lord, Esqs. (*Peter J. McKenna*, Esq. of counsel) for the plaintiff.
Alice Daniel, Assistant Attorney General, *Joseph I. Liebman*, Attorney in Charge, Field Office for Customs Litigation, and *James A. Resti*, trial attorney, for the defendant.

NEWMAN, Judge: We have heard repeatedly that truth is stranger than fiction. But is it? Here, the inquiry does not end with that saying—it only begins.

In this action, plaintiff seeks reliquidation of its entry of March 9, 1976, pursuant to section 520(c)(1) of the Tariff Act of 1930, as amended (19 U.S.C. 1520(c)(1)) (hereinafter section 520(c)(1)). That section reads:

> (c) *Reliquidation of entry.*—Notwithstanding a valid protest was not filed, the appropriate Customs officer may, in accordance with regulations prescribed by the Secretary, reliquidate an entry to correct—
>
> (1) a clerical error, mistake of fact, or other inadvertence not amounting to an error in the construction of a law, adverse to the importer and manifest from the record or established by documentary evidence, in any entry, liquidation, or other Customs transaction, when the error, mistake, or inadvertence is brought to the attention of the Customs Service within 1 year after the date of entry, or transaction, or within 90 days after liquidation or exaction when the liquidation or exaction is made more than 9 months after the date of the entry, or transaction; * * *.

The pertinent facts in this unsual case may be summarized as follows: [1]

On February 24, 1976, plaintiff imported from Nicaragua 9,239,546 pounds of raw cane sugar, which were unladen at the Port of New Orleans under an immediate delivery permit. Under such permit, plaintiff was allowed to import the sugarcane without filing a consumption entry for 10 business days after release of the merchandise, in this case until March 9, 1976. [2]

As part of the Trade Act of 1974, title V, section 501, et seq. (19 U.S.C. 2461, et seq.), Congress enacted the Generalized System of

[1] The record comprises the testimony of two witnesses each for plaintiff and for defendant. Additionally, both parties submitted documentary exhibits; and the official entry papers were admitted in evidence as an unnumbered exhibit. Plaintiff's witnesses were: Al Hampton, who at the time of importation of the subject merchandise was assistant to the raw sugar buyer and plaintiff's treasurer, but at the time of trial was no longer employed by plaintiff; and Margaret McAuliffe, secretary-treasurer of Philbin, Cazalas & St. John, Inc., plaintiff's customhouse broker. Defendant's witnesses were: Joanne Cornelison, Acting Director of classification and Value for Customs at the Port of New Orleans, who at the time of entry of the merchandise was Supervisory Import Specialist; and Robert Abramson, Acting Assistant Regional Commissioner for Administration, who at the time of entry was Director of Classification and Value at the Port of New Orleans.

[2] See 19 CFR 142, et seq., which set forth the requirements and procedures relative to special permits for immediate delivery of merchandise prior to entry, as authorized by sec. 448(b), Tariff Act of 1930, as amended (19 U.S.C. 1448(b)).

328-838 O - 80 - 4

Preferences (GSP), whereby the President was granted authority to extend duty-free treatment to eligible articles from any beneficiary developing country designated by him. The GSP permits the President to withdraw, suspend or limit the application of duty-free treatment with respect to any article or any country. By Executive Order 11888, dated November 24, 1975, the GSP was made operative as of January 1, 1976, 40 F.R. 55275, T.D. 75-304 (1975). Among many articles designated for duty-free treatment was Nicaraguan sugar, the subject merchandise. The list of eligible articles and beneficiary developing countries has been amended from time to time by Presidential Executive order, and these changes have been made effective as of the date the merchandise is entered, or withdrawn from the warehouse, for consumption. As pointed out in Sturm, "Customs Law and Administration" (1980), page 731: "This causes difficulties since the annual changes required by the competitive need requirements of the statute are usually made on very short notice." The author's prescient observation as we shall see here, concerns a change most certainly "made on very short notice."

From January 1, 1976 (date of implementation of the GSP), through February 28, 1976, the subject merchandise was eligible for duty-free treatment under the GSP. On February 26, 1976, the President proclaimed by Executive Order 11906 certain modifications in the GSP, which involved changes in specific country eligibility for duty-free preferential treatment for numerous products. The Executive order signed by the President to implement the changes in the GSP was published in the Federal Register on February 27, 1976 (41 F.R. 8758), and was made applicable with respect to articles entered, or withdrawn from warehouse, for consumption on or after the effective date of February 29, 1976. Thus, Executive Order 11906 was dated on a Thursday, published in the Federal Register on Friday, and became effective on Sunday.[3] Special arrangements were available for entries at night and on Saturday. Hence, in view of the short period of time from the notice of the President's Executive order eliminating a commodity or country from the GSP and the effective date of such order, it is readily understandable how an importer could fail to meet a deadline for filing a duty-free entry.

The evidence in this case establishes that the importation was purchased from Amerop Corp., and that the seller sent plaintiff a telex on February 13, 1976, advising, inter alia, that the shipment would be eligible for duty-free entry. As mentioned supra, the ship-

[3] See Sturm, supra, p. 731, for other instances in which there similarly were changes in eligible articles and countries on very short notice. At the trial, defendant's witness Cornelison testified that at the Port of New Orleans, notices of changes in the GSP were received "a maximum of a day or two before the effective date so these [notices to brokers and importers] are disseminated in a great rush" (R. 221).

ment arrived at the Port of New Orleans on February 24, 1976, and instead of being entered for consumption, plaintiff utilized an immediate delivery permit. Both plaintiff and its customhouse broker, Philbin, Cazalas & St. John, Inc. (Philbin), were cognizant at the time of importation that the subject merchandise orginated in and was exported from Nicaragua. Moreover, Margaret McAuliffe, who was a licensed customhouse broker and responsible for plaintiff's account at Philbin, was aware that Nicaragua was one of the countries receiving duty-free treatment under the GSP. Nevertheless, it appears that at the time of importation neither McAuliffe nor Al Hampton, who was responsible in plaintiff's company for matters pertaining to the importation of sugar and the payment of duties for plaintiff, was aware that the subject shipment was then entitled to duty-free entry. The evidence shows that Hampton was not aware of the specific countries which qualified for GSP treatment, and further, that Hampton overlooked the specific advice in Amerop's telex of February 13, 1976, that the shipment would be duty free. Significantly, on February 26, 1976, Hampton arranged for and had a check drawn for the payment of duties and forwarded such check to Philbin, which Philbin received on February 27, 1976. McAuliffe relied upon this check as an indication that the shipment was duty payable.

The evidence further shows that McAuliffe received a telephone call on February 26, 1976, from a Miss Bennett, an import specialist with Customs at New Orleans. Bennett informed McAuliffe that certain countries (which, according to McAuliffe, were not specifically identified) were to be eliminated from the GSP program; and more, Bennett urged McAuliffe to immediately enter any eligible sugar shipments.[4] Unfortunately, and for whatever reason, McAuliffe then labored under the false impression that the subject importation was not eligible for duty-free treatment.

On March 3, 1976, Hampton received a telephone call from Amerop, and thereupon discovered that a discrepancy in the pricing of the sugar was due to the fact that the seller made no deduction for duty from the price initially quoted. It was at this point in time that Hampton first became aware that the subject shipment qualified for duty-free entry under the GSP. Hampton then telephoned Customs on the same date (March 3) and learned through Bennett that the duty-free status of Nicaraguan sugar had terminated on February 29, 1976.[5] Nevertheless, on March 4, 1976, Hampton telephoned McAuliffe

---

[4] Bennett died in December 1977, and the consequent inability of the court to observe her demeanor, and for the parties to examine and cross-examine her concerning the information she furnished to McAuliffe created a complicating factor for the court and counsel.

[5] Hampton also received written notice from Customs by mail on Mar. 4, 1976, respecting Executive Order 11906. Additionally, he received a copy of the order from Philbin on the same date. Philbin received notice of the order in its box at the customhouse.

at Philbin and instructed her to enter the merchandise duty free and return the check sent for payment of duties. On that same date, Philbin attempted to file a duty-free entry with Customs, but such entry was rejected for the reason that Nicaraguan sugar was no longer entitled to duty-free entry by virtue of the President's Executive order. On March 9, 1976, the merchandise was entered as dutiable and was liquidated accordingly on May 14, 1976.[6]

As mentioned at the outset, this action is predicated upon section 520(c)(1). The gravamen of the action is that plaintiff failed to enter its shipment duty free under the GSP before the effective date of Executive Order 11906 due to "clerical error, mistake of fact, or other inadvertence not amounting to an error in the construction of a law" within the meaning of section 520(c)(1), and therefore Customs erred in refusing to reliquidate the entry duty free pursuant to that section.

Defendant maintains that the record as a whole shows that there was no mistake or inadvertence by plaintiff in not filing an entry by February 29, 1976;[7] and that even accepting as true the evidence most favorable to plaintiff, the failure to enter the merchandise prior to February 29 was due to plaintiff's erroneous legal conclusion that the merchandise did not qualify for duty-free treatment under the GSP rather than ignorance of facts. Further, defendant insists that the presumption of correctness attaching to Customs' refusal to reliquidate the entry under section 520(c)(1) has not been overcome by plaintiff.

Respecting the factual issue raised by defendant as to whether plaintiff's unfortunate predicament was due to mistake or inadvertence I must in all candor state that the facts urged by each of the parties appear somewhat anomalous, indeed, almost incredible. Further, I must confess that much of the testimony of the witnesses strains credulity and brooks reality. It would not be unfair to state that the record in this case is like a jigsaw puzzle with many missing parts, and it is difficult to sidcern what the completed puzzle is intended to depict. Consequently, it would be a simple matter to find that for lack of veracity of its evidence, plaintiff has failed to sustain its burden of proof However, I am not inclined to that easy approach because at the trial of this case in New Orleans on December 6 and 7, 1979, I was impressed by the ostensibly sincere and honest endeavor of all the witnesses, both plaintiff's and defendant's to recall, as best as they could, the confluence of elusive events that occurred more than 3 years prior thereto in February 1976.

---

[6] Plaintiff was assessed duty in the amount of $59,199.06.

[7] Defendant's position, in essence, is that plaintiff failed to enter the subject merchandise prior to Feb. 29, 1976, knowing that prior to that date the merchandise had a duty-free status under the GSP.

The evidence viewed most favorably to plaintiff establishes that plaintiff's failure to file a consumption entry for the subject merchandise prior to February 29, 1976, was due to plaintiff's (and its broker's) ignorance of the duty-free status of the merchandise under the GSP. The core issue is whether section 520(c)(1) is remedial under these circumstances.

Viewed dispassionately, the record precludes any determination but one—that plaintiff has failed to sustain the requisite burden.

Even assuming arguendo that the duty-free status of the merchandise under the GSP does not involve construction of a law, which is excluded from relief under section 520(c)(1),[8] I have concluded that plaintiff's failure to file a duty-free entry by the deadline prescribed by the Executive order is not within the scope of that section.

By the express terms of section 510(c)(1), plaintiff had the burden of establishing "a clerical error, mistake of fact, or other inadvertence * * * *in* [*an*] *entry, liquidation, or other customs transaction* * * *." (Italic added.) *Geo. Wm. Rueff, Inc.* v. *United States*, 41 Cust. Ct. 331, 334, abs. 62204 (1958). The legislative history of section 520(c)(1), relied upon by plaintiff,[9] demonstrates that Congress intended the statute to eliminate injustice resulting from certain errors, mistakes, and inadvertences in an entry, liquidation, and other Customs transaction. However, I see nothing in either section 520 (c)(1) or the legislative history cited by plaintiff which suggests that Congress intended the statute to be remedial in situations where, as here, the importer mistakenly or inadvertently failed to make an entry within the time limit prescribed by law to obtain duty-free treatment. In the present case, the merchandise was not entered until March 9, 1976, on which date the merchandise concededly was no longer eligible for duty-free treatment. Consequently, in plaintiff's dutiable entry on March 9, 1976, there was no mistake or inadvertence. Simply put, plaintiff's mistake or inadvertence was not in an entry, but rather in failing to make an entry prior to February 29, 1976. Section 520(c)(1) is not remedial for every conceivable form of mistake or inadvertence adverse to an importer, but rather the statute offers "limited relief in the situations defined therein." *Phillips Petroleum Company* v. *United States*, 54 CCPA 7, 11, C.A.D. 893 (1966). I cannot disregard the cutoff date for duty-free entry established by Executive Order 11906 simply on the tenuous basis that plaintiff

---

[8] For the distinction between "mistake of law" and "mistake of fact" under sec. 520(c)(1) see *Hambro Automotive Corporation* v. *United States*, 66 CCPA—, C.A.D. 1231, 603 F. 2d 850 (1979). Cf. *International Forwarding Co.* v. *United States*, 9 Cust. Ct. 428, Abs. 47630 (1942) (importer failed to file document for tax exemption due to ignorance of the law).

[9] Simplification of Customs Administration: Hearings on H.R. 1535 before the House Comm. on Ways and Means, 82 Congress, 1st session 42 (1951); S. Rep. No. 632, 83d Congress, 1st session, reprinted in (1953) U.S. Code Cong. & Admin. News 2283.

mistakenly assumed that the merchandise did not qualify for GSP treatment.

In support of its position, plaintiff cites *C. J. Tower & Sons of Buffalo* v. *United States*, 68 Cust. Ct. 17, C.D. 4327, 336 F. Supp. 1395 (1972), *aff'd*, 61 CCPA 90, C.A.D. 1129, 499 F. 2d 1277 (1974). There, the importer was unaware at the time of entry that the shipment at issue comprised emergency war material entitled to duty-free entry. The importation was entered as dutiable, and was liquidated accordingly. Central to the issue presented was the construction of section 520(c)(1). Judge Ford found that the importer's lack of knowledge of the facts justifying duty-free entry clearly came within the statutory language, "mistake of fact, or other inadvertence," and sustained plaintiff's claim that the entry should have been reliquidated pursuant to section 520(c)(1). On appeal, Judge Rich, writing for the Court of Customs and Patent Appeals, affirmed.

But the present case is clearly distinguishable from *Tower*. In *Tower*, the merchandise was duty free at the time of entry, but through mistake of fact was entered as dutiable. Here, at the date of entry (Mar. 9, 1976) the merchandise was properly dutiable since it no longer qualified for duty-free treatment under the GSP. Hence, in the present case there was no mistake of fact or inadvertence in the entry filed on March 9, 1976. The admittedly duty-free status of the Nicaraguan sugar prior to February 29, 1976, does not establish any mistake of fact or inadvertence in the dutiable entry of March 9, 1976.[10] There is no dispute that had the merchandise herein been entered prior to February 29, 1976, it would have been eligible for duty-free entry under the GSP.[11] Following the rationale of *Tower*, it would appear that if through mistake of fact or inadvertence the Nicaraguan sugar had been entered as dutiable prior to February 29, 1976, and liquidated accordingly, the entry could be reliquidated duty free pursuant to section 520(c)(1).[12] Since the merchandise herein was not duty free on the date of entry, *Tower* is inapposite.

While I sympathize with plaintiff's unhappy predicament in this case, and the short notice given by Customs of the changes in the GSP has not been lost on the Court, I am constrained to hold that the scope of relief afforded by section 520(c)(1) is not addressed to the facts and circumstances disclosed by the record.

---

[10] In its briefs, plaintiff's counsel repeatedly states that the merchandise was entered on Feb. 24, 1976, thus confusing the date of importation with the date of entry. However, plaintiff's counsel recognizes that the merchandise was not formally entered until Mar. 9, 1976. Although, as pointed out by plaintiff (brief, at 6) the merchandise was duty free "at the time of importation," changes in eligible articles and countries under the GSP are effective as of the date of entry. See Sturm, p. 731.

[11] Both plaintiff's witness McAuliffe and defendant's witness Abramson agreed that, if the documents proffered on Mar. 9, 1976 had been submitted by plaintiff before Feb. 29, 1976, the merchandise would have qualified for duty-free treatment under the GSP (R.143, 299-300).

[12] This assumes, of course, that the documents required for duty-free entry are submitted.

Finally, it is appropriate to record the professional manner in which all counsel conducted themselves at the trial. Plaintiff's attorney faced an obviously difficult situation; defendant's attorneys responded effectively. The demeanor and efforts of all counsel do credit to our profession.

The action is dismissed. Judgment will be entered accordingly.

Decisions of the United States Customs Court

Customs Rules Decision

(C.R.D. 80–12)

BEDDY G. CURY, CURLY TOP, INC., MOVANT, *v.* UNITED STATES, RESPONDENT

Memorandum Accompanying Order

Protest Nos. 1001–0–000678, etc.

(Dated September 15, 1980)

FORD, Judge: It appears from the papers filed in this matter that Mr. B. G. Cury, chairman and sole stockholder of Curly Top, Inc., advised the clerk of this court by letter dated July 24, 1980, that he desired to bring an action in this court without the benefit of counsel. On July 29, 1980, Mr. Cury was advised by the chief deputy clerk of this court that the summonses were being returned since they were not in conformity with rule 3.2(a), which provides for a filing fee to be paid when the action is commenced. In addition, Mr. Cury was advised that rule 3.2(c) requires that, except in an action commenced by an individual in his own behalf, a summons must be filed by an attorney admitted to practice before the court. He was further advised that, if he felt aggrieved by the refusal of the clerk's office to accept the summonses as prescribed in rule 17.1(a) of the rules of this court, he may move to compel the clerk to accept the summonses by filing a motion to that effect pursuant to rule 4.12 and serve a copy of the motion upon respondent pursuant to rule 4.1.

Mr. Cury filed four separate letters together with summonses and checks representing the filing fees in which he requested the privilege to be heard and defend his position. The office of the clerk on August 18 advised Mr. Cury that it was considering his four letters as a motion to compel the clerk to accept the filing of the four summonses.

Respondent opposes the motion to compel the clerk to accept the filing on the basis that the movant corporation is required to bring an action by an attorney duly admitted to practice before this court as required by rule 16.3(e) of the rules of this court.

The case law on this subject is unequivocal in holding that a corporation can be represented in court only through an attorney at law. The decisions in this court and in the Court of Customs and Patent Appeals follow this principle. *S. Stern, Henry & Co.* v. *United States*, 48 Cust. Ct. 430 (1962), *aff'd*, 51 CCPA 15, C.A.D. 830 (1963), *cert. den.* 377 U.S. 909 (1964); *J. M. Altieri* v. *United States*, 58 Cust. Ct. 50, C.D. 2882 (1967), *aff'd*, 55 CCPA 104, C.A.D. 940 (1968); *R. G. Hobelmann & Co.* v. *United States*, 63 Cust. Ct. 80, C.D. 3878 (1969); *World Mart, Inc.* v. *United States*, 71 Cust. Ct. 164, C.D. 4490 (1973).

Similarly, other Federal courts have followed this principle. *Osborn* v. *Bank of United States*, 22 U.S. (9 Wheat.) 738, 830 (1824); *In re Victors Publishing Co.*, 545 F. 2d 285, 286 (1st Cir. 1976); *SEC* v. *Research Automation Corp.*, 521 F. 2d 585, 589 (2d Cir. 1975); *Shapiro, Bernstein & Co.* v. *Continental Record Co.*, 386 F. 2d 426, 427 (2d Cir. 1967); *Simbraw, Inc.* v. *United States*, 367 F. 2d 373, 374 (3d Cir. 1966); *Acme Poultry Corp.* v. *United States*, 146 F. 2d 738, 740 (4th Cir. 1944); *Ginger* v. *Cohn*, 426 F. 2d 1385, 1386 (6th Cir. 1970); *United States* v. *9.19 Acres of Land*, 416 F. 2d 1244, 1245 (6th Cir. 1969); *Strong Delivery Ministry Ass'n.* v. *Board of Appeals of Cook County*, 543 F. 2d 32, 33 (7th Cir. 1976); *In re Highley*, 459 F. 2d 554, 555 (9th Cir. 1972); *Devilliers* v. *Atlas Corp.*, 360 F. 2d 292, 294 (10th Cir. 1966); *Flora Construction Co.* v. *Fireman's Fund Insurance Co.*, 307 F. 2d 413, 414 (10th Cir. 1962), *cert. den.*, 371 U.S. 950 (1963). See also 19 A.L.R. 3d 1073.

Upon reviewing the papers the court notes the protests were denied on April 25, 1980, May 16, 1980, and two denials on July 25, 1980. The time within which to institute an action is governed by 28 U.S.C. 2631(a) and provides such action be filed within 180 days of such denial. Accordingly, in order to protect its rights, movant should obtain a counsel duly admitted to practice before this court and have the summonses filed within the appropriate times.

In view of the foregoing, movant's motion to compel the clerk to file the summonses relating to the protest numbers indicated on the annexed schedule is denied.

ERRATUM

In CUSTOMS BULLETIN, vol. 14, No. 35, dated August 27, 1980, in C.D. 4866, pages 66 through 68 should read as follows:

(or his delegate) of an established and uniform practice in classifying the merchandise under item 685.10, TSUS, plaintiff's claim that an established and uniform practice was changed without notice in violation of section 315(d) of the Tariff Act of 1930, as amended, cannot be sustained. The statute is clear that the notice requirements for a change of practice are intended for the benefit of importers whose entries are made after a finding of an established and uniform practice. Plaintiff's contention that in 1974 (the year of importation) it relied upon the finding made in 1976 is obviously without merit.

MOUNTED LENSES (ITEM 708.23, TSUS)—"MORE THAN" DOCTRINE

The provision in item 708.23, TSUS, for mounted lenses is not applicable to merchandise which is "more than a transparent substance used to form an image fixed in a proper backing, support or setting," *Kalimar, Inc.* v. *United States*, 66 Cust. Ct. 112, 116, C.D. 4178 (1971). Hence, a Varotal 30 television camera lens system which, in addition to a mounted lens, includes many significant electrical and mechanical components that are not embraced by the common meaning of the term "mounted lens" (as determined in *Kalimar*), is more than a mounted lens within the purview of item 708.23, TSUS.

OPTICAL INSTRUMENTS—STATUTORY DEFINITION IN HEADNOTE 3, PART 2, SCHEDULE 7

In determining whether imported merchandise is classifiable as an optical instrument under the TSUS, the statutory definition of the term in headnote 3, part 2, schedule 7 is controlling. *United States* v. *Ataka America, Inc.*, 64 CCPA 60, 65, n. 4, C.A.D. 1184, 550 F. 2d 33 (1977). Under the definition of optical instruments in headnote 3, the issue is not whether the optical element is subsidiary or dominant, but rather "the statutory distinction is between 'subsidiary' and *not* 'subsidiary.' " [Italic added.] (*Id.* at 66, n. 5.) Since the subject merchandise incorporates one or more optical elements which are not subsidiary with regard to the operation of the article, it is properly classifiable as an optical instrument under item 708.89, TSUS. *Norman G. Jensen, Inc.* v. *United States*. 77 Cust. Ct. 9, 13, C.D. 4668 (1976).

SAME—"INSTRUMENT" DEFINED

Webster's New International Dictionary (2d ed. 1950), p. 1288, broadly defines the term "instrument," as follows: "That by means of which any work is performed or result is effected; a medium;

means." The Varotal 30 television camera lens system is an instrument within the foregoing definition, and within headnote 3, part 2, schedule 7, TSUS.

SAME—TELEVISION CAMERA LENS SYSTEM

The Varotal 30, which was referred to by plaintiff's witness as an "optical system" and as an "optical package," is essentially a television camera lens with a sophisticated system of electronic and mechanical controls for the iris (aperture), zoom, and focus, which are all optical features of the merchandise. Since the record shows that the major electromechanical components of the merchandise are directly related to the optical function of the lens system, the electromechanical features of the Varotal 30 do not exclude the merchandise from the definition of "optical instruments" in headnote 3, part 2, schedule 7, TSUS. *Cf. Corning Glass Works* v. *United States*, 82 Cust. Ct. 249, C.D. 4807 (1979). The "Tally" lights are ancillary and subordinate to the optical components of the merchandise.

GENERAL INTERPRETATIVE RULE 10(ij)—PARTS OF TELEVISION CAMERAS SPECIFICALLY PROVIDED FOR AS OTHER OPTICAL APPLIANCES AND INSTRUMENTS

Since the subject merchandise is specifically provided for as an optical appliance or instrument under item 708.89, TSUS, classification as part of a television camera under item 685.10, TSUS, is precluded by general interpretative rule 10(ij). *Cf. Jensen, supra*, 77 Cust. Ct. at 21.

Court No. 76-12-02771

[Dismissed without affirming classification of District Director.]

Decided July 28, 1980

Siegel, Mandell & Davidson, Esqs. (*Herbert T. Posner*, Esq. of counsel) for the plaintiff.

Alice Daniel, Assistant Attorney General, *Joseph I. Liebman*, Attorney in Charge, Field Office for Customs Litigation, and *Sidney N. Weiss*, trial attorney, for the defendant.

NEWMAN, Judge: This action presents for determination the proper classification, and hence the proper rate of duty, for a Varotal 30 lens package imported by plaintiff from England and entered at the port of Chicago, Ill., on June 25, 1974. In liquidating the entry, Customs classified the imported article as a mounted lens (other than projection) under item 708.23 of the Tariff Schedules of the United States (TSUS), as modified by T.D. 68-9, and assessed duty at the rate of 12.5 per centum ad valorem. As an alternative classification, the Government claims that the merchandise is encompassed by the provision in item 708.89, TSUS, as modified, for "Other (optical) appliances and instruments," for which the rate of duty is 22.5 per centum ad valorem. Plaintiff claims that the merchandise is properly

dutiable at the rate of 6 per centum ad valorem under the provision in item 685.10, TSUS, as modified, for parts of television cameras.

I find that the merchandise is classifiable under item 708.89, TSUS, as alternatively claimed by the Government. Accordingly, this action is dismissed without affirming the classification of the District Director under item 708.23, TSUS.

STATUTES INVOLVED

19 U.S.C. 1202, Tariff Schedules of the United States:

Classified:

Schedule 7, part 2, subpart A:

Lenses, prisms, mirrors, and other optical elements, all of the foregoing whether mounted or not mounted:

* * * * * * *

Mounted:

Lenses:

* * * * * * *

708.23 Other ..... 12.5% ad val.

Defendant's alternative claim:

Optical appliances and instruments not provided for elsewhere in part 2 of this schedule; frames and mountings for such articles, and parts of such frames and mountings:

* * * * * * *

708.89 Other appliances and instruments .. 22.5% ad val.

Plaintiff's claim:

Schedule 6, part 5:

Radiotelegraphic and radiotelephonic transmission and reception apparatus; radio broadcasting and television transmission and reception apparatus, and television cameras; record players, phonographs, tape recorders, dictation recording and transcribing machines, record changers, and tone arms; all of the foregoing, and any combination thereof, whether or not incorporating clocks or other timing apparatus, and parts thereof:

685.10 Television cameras, and parts thereof ..... 6% ad val.

THE FACTS [1]

The Varotal 30 is a television camera lens system comprised of a number of optical, electrical, and mechanical components.[2] The

[1] The record consists of the testimony of five witnesses called on behalf of plaintiff and one witness called by defendant. Plaintiff's witnesses were: Brendan M. Murphy, treasurer of plaintiff, Rank Precision Industries, Inc.; Kish B. Sadhvani, plaintiff's product manager; Raymond J. Smith, employed by RCA Corp. as engineering manager for camera equipment; David Frederick Shade, chief accountant for Rank Taylor Hobson, Leicester, England; and Walter David, Jr., operations manager for Optical Imports, Inc. Defendant called as its witness Dr. Leonard Bergstein, professor of electro-optical sciences at Polytechnic Institute of New York. Both parties submitted various exhibits. The official papers were received without marking.

[2] The importation, when assembled in operating condition, consists of the following component parts: Power supply module, iris servo drive module, focus servo module drive, zoom servo module drive, systems board, dual demand shot box, adjustable pan bar S type, Tally lights, focus demand control, range extender remote control, electrical connecting cables, in addition to basic 10:1 zoom lens unit.

International Trade Commission Notices

Investigations by the U.S. International Trade Commission

DEPARTMENT OF THE TREASURY

The appended notices relating to investigations by the U.S. International Trade Commission are published for the information of Customs officers and others concerned.

R. E. CHASEN,
Commissioner of Customs.

In the Matter of CERTAIN INCLINED-FIELD ACCELERATION TUBES AND COMPONENTS THEREOF	Investigation No. 337-TA-67

Commission Hearing on the Presiding Officer's Recommendation and on Relief, Bonding, and the Public Interest, and the Schedule for Filing Written Submissions

AGENCY: U.S. International Trade Commission.

ACTION: The scheduling of oral argument and briefing for investigation No. 337-TA-67, Certain Inclined-Field Acceleration Tubes and Components Thereof.

Notice is hereby given that the presiding officer has filed her recommended determination that there is a violation of section 337 of the Tariff Act of 1930, in the unauthorized importation into and subsequent sale in the United States of the accused inclined-field acceleration tubes. She has also certified the evidentiary record to the Commission for its consideration. Interested persons may obtain copies of the nonconfidential version of the presiding officer's recommendation (and all other public documents) by contacting the Office of the Secretary to the Commission, 701 E Street NW., Washington, D.C. 20436.

COMMISSION HEARING

The Commission will hold a hearing beginning at 10 a.m., e.s.t., on October 30, 1980, in the Commission's hearing room, 701 E Street NW., Washington, D.C. 20436, for two purposes. First, the Commission will hear oral argument on the presiding officer's recommendation that a violation of section 337 of the Tariff Act of 1930, exists. Second, the Commission will hear presentations concerning appropriate relief, the way such relief would affect the public interest, and the proper amount of the bond during the Presidential review period, in the event that the Commission determines that there is a violation of section 337. These matters will be heard on the same day in order to facilitate the completion of this investigation within time limits established under law and to minimize the burden of this hearing upon the parties. The procedures for each portion of the hearing follow.

ORAL ARGUMENT

A party to the Commission's investigation or an interested agency wishing to present to the Commission an oral argument concerning the presiding officer's recommendation will be limited to no more than 30 minutes. A party or interested agency may reserve 10 minutes of its time for rebuttal. The oral arguments will be held in this order: Complainant, respondents, interested agencies, and the Commission investigative attorney. Any rebuttals will be held in this order: Respondents, complainant, interested agencies, and the Commission investigative attorney.

Following the oral arguments on the presiding officer's recommendation, a party to the investigation, an interested agency, a public interest group, or any interested member of the public may make an oral presentation on relief, bonding, and the public interest.

RELIEF

If the Commission finds that a violation of section 337 has occurred, it may issue (1) an order which could result in the exclusion from entry of certain inclined field acceleration tubes and components thereof or (2) an order which could result in requiring the respondent to cease and desist from alleged unfair methods of competition or unfair acts in the importation and sale of certain inclined-field acceleration tubes and components thereof. Accordingly, the Commission is interested in what relief, if any, should be ordered.

BONDING

If the Commission finds that a violation of section 337 has occurred and orders some form of relief, the President has up to 60 days to

approve or disapprove the Commission's action. During this period the subject articles would be entitled to enter the United States under a bond determined by the Commission and prescribed by the Secretary of the Treasury. Accordingly, the Commission is interested in what bond, if any, should be assessed.

PUBLIC INTEREST

If the Commission concludes that a violation of section 337 has occured and orders some form of relief, it must consider the effect of that relief upon the public. Accordingly, the Commission is interested in the effect of any exclusion or cease and desist order upon (1) the public health and welfare, (2) competitive conditions in the U.S. economy, (3) the production of like or directly competitive articles in the United States, and (4) U.S. consumers.

WRITTEN SUBMISSIONS

Parties to the Commission's investigation, interested agencies, and the Commission investigative staff are encouraged to file briefs on the issues of violation (to the extent they have not already briefed that issue in connection with their exceptions to the presiding officer's recommended determination), remedy, bonding, and the public interest in order to give greater focus to the hearing. Such briefs must be filed no later than the close of business on October 16, 1980. The parties may be asked during the course of the hearing to file posthearing briefs if necessary.

NOTICE OF APPEARANCE

Written requests to appear at the Commission hearing must be filed by October 16, 1980.

ADDITIONAL INFORMATION

The original and 19 true copies of all briefs and written comments and any written request to participate must be filed with the Secretary to the Commission. Any person desiring to discuss confidential information, or to submit a document (or a portion thereof) to the Commission in confidence, must request in camera treatment unless the information has already been granted in camera treatment by the presiding officer. Such request should be directed to the Chairman of the Commission and must include a full statement of the reasons why the Commission should grant such treatment. Documents or arguments reflecting confidential information approved by the Commission for in camera treatment will be treated accordingly. All nonconfidential written submissions will be available for public

inspection at the Secretary's office. Notice of the Commission's investigation was published in the Federal Register of June 27, 1979 (44 F.R. 37567).

By order of the Commission.

Issued: September 17, 1980.

KENNETH R. MASON,
Secretary.

---

19 CFR, Part 207

Investigation No. AA1921–66A

TELEVISION RECEIVING SETS FROM JAPAN

Notice of Investigation and Hearing

AGENCY: U.S. International Trade Commission.

ACTION: Initiation of an investigation under section 751(b) of the Tariff Act of 1930.

SUMMARY: This action initiates an investigation under section 751(b) of the Tariff Act of 1930, 19 U.S.C. 1675(b), to determine whether changed circumstances exist which indicate that an industry in the United States would not be threatened with material injury if the antidumping finding concerning television receiving sets from Japan was revoked.

On March 4, 1971, the Commission determined that an industry in the United States was being injured by reason of the importation of television receivers that were being, or were likely to be, sold at less than fair value within the meaning of the Antidumping Act, 1921. An application for a review of this determination was filed with the Commission by Sanyo Electric Co., Ltd., and Sanyo Electric, Inc., on July 28, 1980. Similar applications were filed on August 4, 1980, by counsel for Matsushita Electrics Industrial Co., Ltd., Matsushita Electric Corp. of America, Panasonic Hawaii, Inc., and Panasonic Sales Co., and by counsel for Hitachi Ltd., Hitachi Sales Corp. of America, and Hitachi Sales Corp. of Hawaii on August 26, 1980. Letters supporting the applications were filed by Victor Co., on August 7, 1980, Mitsubishi Electronic Corp. on August 25, 1980, and Sharp Electronics Corp. on August 20, 1980. Memorandums opposing institution of the investigation were filed by Zenith Radio Corp. on August 13, 1980, and counsel for the Electronic Industries Association and the Committee to Preserve American Color Television on August 20, 1980. On the basis of the applications and the memorandums filed in opposition, the Commission voted on September 16,

1980, to institute an investigation pursuant to section 751(b) of the Tariff Act of 1930 and section 207.45 of the Commission's Rules of Practice and Procedure (19 CFR 207.45).

DATE: The 120-day statutory period for this investigation began on September 16, 1980, the date of institution. The deadline for the Commission's determination is January 13, 1980.

FOR FURTHER INFORMATION CONTACT: Daniel F. Leahy, U.S. International Trade Commission, 202–523–1369.

SUPPLEMENTARY INFORMATION:

PROPOSED RULE CHANGE

Participants in the investigation should be aware that the Commission voted on August 6, 1980, to propose an amendment to section 207.45 of the Rules of Practice and Procedure, which implements section 751 of the Tariff Act of 1930. The proposed revision was published for comment at 45 F.R. 54086 (Aug. 14, 1980). In the event that the Commission adopts the proposed amendment, the Commission would in this case determine whether an industry in the United States would be materially injured, or would be threatened with material injury, or the establishment of an industry in the United States would be materially retarded, by reason of imports of television receivers from Japan if the antidumping order was revoked.

PUBLIC HEARING

A public hearing in connection with the investigation will be held on November 12, 1980, in the Commission's hearing room, U.S. International Trade Commission Building, 701 E Street NW., Washington, D.C. 20436, beginning at 10 a.m., e.s.t. Requests to appear at the public hearing should be filed in writing with the Secretary to the Commission not later than the close of business (5:15 p.m., e.s.t.) on November 7, 1980. For further information, consult the Commission's Rules of Practice and Procedure, part 207, subpart C (44 F.R. 76457), effective January 1, 1980.

PREHEARING STATEMENTS

The Commission will prepare and place on the record by October 23, 1980, a staff report containing preliminary findings of fact. Parties to the investigation will submit to the Commission a prehearing statement by November 7, 1980. Statements should include the following:

(a) Exception, if any, to the preliminary findings of fact contained in the staff report;

(b) Any additional or proposed alternative findings of fact;

(c) Proposed conclusions of law;

(d) Any other information and arguments which a party believes relevant to the Commission's determination in this investigation; and

(e) A proposed determination for adoption by the Commission

WRITTEN SUBMISSIONS

Any persons may submit to the Commission on or before the prehearing statement due date any written statements of information pertinent to the subject matter of the investigation. A signed original and 19 true copies of such statements must be submitted.

Any business information which a submitter desires the Commission to treat as confidential shall be submitted separately, and each sheet must be clearly marked at the top "Confidential Business Data." Confidential submissions must conform with the requirements of section 201.6 of the Rules of Practice and Procedure (19 CFR 201.6). All written submissions except business confidential data will be available for public inspection.

By order of the Commission.

Issued: September 18, 1980.

KENNETH R. MASON,
Secretary.

(603–TA–5)

CALCIUM PANTOTHENATE FROM JAPAN

Notice of Termination of Preliminary Investigation

AGENCY: U.S. International Trade Commission.

ACTION: Upon consideration of the final staff report on Calcium Pantothenate from Japan, investigation No. 603–TA–5, the Commission has decided to terminate the investigation conducted pursuant to 19 U.S.C. 2482.

EFFECTIVE DATE: September 17, 1980.

BACKGROUND: On February 20, 1980, the Commission issued a notice of preliminary investigation under section 603 of the Trade Act of 1974 (19 U.S.C. 2482) to determine whether imports of calcium pantothenate from Japan are the subject of a combination, contract or conspiracy to restrain trade and commerce in the United States, or the subject of a scheme to monopolize the d-calcium pantothenate and/or dl-calcium pantothenate markets in the United States. The preliminary investigation undertaken by the staff revealed no unfair

methods of competition and unfair acts in the importation and sale of cal pan by Mitsui & Co., Alps Pharmaceutical, or other companies, the effect or tendency of which is to destroy or substantially injure an industry efficiently and economically operated in the United States, or to prevent the establishment of such an industry, or to restrain or monopolize trade and commerce in the United States. The Commission therefore determined that there was no basis for further investigatory activity and terminated the preliminary investigation.

FOR FURTHER INFORMATION CONTACT: Christine Bliss, Attorney Advisor, Office of the General Counsel, 202–523–9375.

By order of the Commission.

Issued: September 19, 1980.

KENNETH R. MASON,
Secretary.

731–TA–34 (Preliminary)

PORTABLE ELECTRIC NIBBLERS FROM SWITZERLAND

Notice of Institution of Preliminary Antidumping Investigation and Scheduling of Conference

AGENCY: U.S. International Trade Commission.

ACTION: Institution of preliminary antidumping investigation to determine whether there is a reasonable indication that an industry in the United States is materially injured, or is threatened with material injury, or the establishment of an industry is materially retarded, by reason of imports from Switzerland of hand-directed or hand-controlled nibblers with self-contained electric motors, provided for in item 683.20 of the Tariff Schedules of the United States (TSUS), sold or likely to be sold at less than fair value.

EFFECTIVE DATE: September 18, 1980.

FOR FURTHER INFORMATION CONTACT: Daniel Leahy, senior investigator, 202–523–1369.

SUPPLEMENTARY INFORMATION:

BACKGROUND

This investigation is being instituted following receipt of a petition on September 10, 1980, filed by the Widder Corp., Naugatuck, Conn., on behalf of the domestic industry producing portable electric nibblers. The petition alleged sales at less than fair value (LTFV) of portable electric nibblers produced in Switzerland.

AUTHORITY

Section 733(a) of the Tariff Act of 1930 (19 U.S.C. 1673b(a)) requires the Commission to make a determination of whether there is a reasonable indication that an industry in the United States is materially injured, or is threatened with material injury, or the establishment of an industry in the United States is materially retarded, by reason of imports alleged to be, or likely to be, sold in the United States at less than fair value. Such a determination must be made within 45 days after the date on which a petition is filed under section 732(b) or on which notice is received from the Department of Commerce of an investigation commenced under 732(a). Accordingly, the Commission, on September 18, 1980, instituted preliminary antidumping investigation No. 731–TA–34. This investigation will be subject to the provisions of part 207 of the Commission's Rules of Practice and Procedure (19 CFR 207, 44 F.R. 76457) and particularly, subpart B thereof.

WRITTEN SUBMISSIONS

Any person may submit to the Commission on or before October 15, 1980, a written statement of information pertinent to the subject matter of this investigation. A signed original and 19 copies of such statements must be submitted.

Any business information which a submitter desires the Commission to treat as confidential shall be submitted separately and each sheet must be clearly marked at the top "Confidential Business Data." Confidential submissions must conform with the requirements of section 201.6 of the Commission's Rules of Practice and Procedure (19 CFR 201.6). All written submissions, except for confidential business data, will be available for public inspection.

CONFERENCE

The Director of Operations of the Commission has scheduled a conference in connection with this investigation for 10 a.m., e.d.t., on October 10, 1980, at the U.S. International Trade Commission Building, 701 E Street NW., Washington, D.C. Parties wishing to participate in the conference should contact the senior investigator for the investigation, Mr. Daniel Leahy, 202–523–1369. It is anticipated that parties in support of the petition for antidumping duties and parties opposed to such petition will each be collectively allocated 1 hour within which to make an oral presentation at the conference. Further details concerning the conduct of the conference will be provided by the senior investigator.

INSPECTION OF PETITION

The petition filed in this case is available for public inspection at the Office of the Secretary, U.S. International Trade Commission and at the New York City office of the U.S. International Trade Commission located at 6 World Trade Center.

Issued: September 19, 1980.

KENNETH R. MASON,
Secretary.

In the Matter of
CERTAIN SHELL BRIM HATS } Investigation No. 337-TA-86

Order No. 4: Order and Notice

A request for postponement of the hearing scheduled for September 23, 1980, has been made orally by the Commission investigative attorney on behalf of the Commission and the complianant. The postponement is requested for the purpose of allowing additional time for pursuing settlement negotiations.

Inasmuch as a postponement can be accommodated by the hearing deadline and the administrative law judge's trial schedule, and appears to be in the best interests of successfully concluding the investigation, I hereby order that the hearing in this matter scheduled for September 23, 1980, be postponed until 10 a.m. on October 30, 1980.

The Secretary shall serve a copy of this order and notice upon all parties of record and shall publish it in the Federal Register.

Issued: September 19, 1980.

Judge DONALD K. DUVALL,
Presiding Officer.

In the Matter of
CERTAIN ROTATABLE PHOTOGRAPH AND CARD DISPLAY UNITS AND COMPONENTS THEREOF } Investigation No. 337-TA-74

Commission Hearing on the Presiding Officer's Recommendation and on Relief, Bonding and the Public Interest, and the Schedule for Filing Written Submissions

AGENCY: U.S. International Trade Commission.

ACTION: The scheduling of oral argument and briefing for investigation No. 337-TA-74, Certain Rotatable Photograph and Card Display units and Components Thereof.

Notice is hereby given that the presiding officer has filed his recommended determination that there is a violation of section 337 of the Tariff Act of 1930 (19 U.S.C. 1337) in the unauthorized importation into and sale in the United States of certain rotatable photograph and card display units and components thereof. He has also certified the evidentiary record to the Commission for its consideration. Interested persons may obtain copies of the nonconfidential version of the presiding officer's recommendation (and all other public documents) by contacting the Office of the Secretary to the Commission, 701 E Street NW., Washington, D.C. 20436.

COMMISSION HEARING

The Commission will hold a hearing beginning at 10 a.m., e.d.t., on October 17, 1980, in the Commission's hearing room (room 331), 701 E Street NW., Washington, D.C. 20436, for two purposes. First, the Commission will hear oral argument on the presiding officer's recommendation that a violation of section 337 of the Tariff Act of 1930 exists. Second, the Commission will hear presentations concerning appropriate relief, the way such relief would affect the public interest, and the proper amount of the bond during the Presidential review period, in the event that the Commission determines that there is a violation of section 337. These matters will be heard on the same day in order to facilitate the completion of this investigation within time limits established under law and to minimize the burden of this hearing upon the parties. The procedure for each portion of the hearing follows.

ORAL ARGUMENT

A party to the Commission's investigation or an interested agency wishing to present to the Commission an oral argument concerning the presiding officer's recommendation will be limited to no more than 30 minutes. A party or interested agency may reserve 10 minutes of its time for rebuttal. The oral arguments will be held in this order: Complainant, respondents, interested agencies, and the Commission investigative attorney. Any rebuttals will be held in this order; Respondents, complainant, interested agencies, and the Commission investigative attorney.

ORAL PRESENTATIONS ON RELIEF, BONDING, AND THE PUBLIC INTEREST

If the Commission finds that a violation of section 337 has occurred, it may issue (1) an order which could result in the exclusion from entry of the subject article or (2) an order which could result in requiring the respondent to cease and desist from alleged unfair methods

of competition or unfair acts in the importation and sale of such articles. Accordingly, the Commission is interested in what relief, if any, should be ordered.

If the Commission finds that a violation of section 337 has occurred and orders some form of relief, the President has up to 60 days to approve or disapprove the Commission's action. During this period the subject articles would be entitled to enter the United States under a bond determined by the Commission and prescribed by the Secretary of the Treasury. Accordingly, the Commission is interested in what bond, if any, should be assessed.

If the Commission concludes that a violation of section 337 has occurred and orders some form of relief, it must consider the effect of that relief upon the public. Accordingly, the Commission is interested in the effect of any exclusion or cease and desist order upon (1) the public health and welfare, (2) competitive conditions in the U.S. economy, (3) the production of like or directly competitive articles in the United States, and (4) U.S. consumers.

Following the oral arguments on the presiding officer's recommendation, a party to the investigation, an interested agency, a public-interest group, or any interested member of the public may make an oral presentation on relief, bonding, and the public interest. Such presentations will be limited to no more than 15 minutes. Participants will be permitted an additional 5 minutes for closing arguments after all presentations have been concluded. The Commission investigative attorney will be allotted the full time available to a party.

WRITTEN SUBMISSIONS

Parties to the Commission's investigation, interested agencies, and the Commission investigative attorney are encouraged to file briefs on the issues of violation (to the extent they have not already briefed that issue in connection with their exceptions to the presiding officer's recommended determination), remedy, bonding and public interest in order to give greater focus to the hearing. Such briefs must be filed no later than the close of business October 8, 1980. The parties may be asked during the course of the hearing to file post-hearing briefs.

NOTICE OF APPEARANCE

Written requests to appear at the Commission hearing must be filed by October 8, 1980.

ADDITIONAL INFORMATION

The original and 19 true copies of all briefs and written comments and any written request to participate must be filed with the Secretary

to the Commission. Any person desiring to discuss confidential information, or to submit a document (or a portion thereof) to the Commission in confidence, must request in camera treatment unless the information has already been granted in camera treatment by the presiding officer. Such request should be directed to the Chairman of the Commission and must include a full statement of the reasons why the Commission should grant such treatment. Documents or arguments reflecting confidential information approved by the Commission for in camera treatment will be treated accordingly. All nonconfidential written submissions will be available for public inspection at the Secretary's office.

Notice of the Commission's investigation was published in the Federal Register of November 21, 1979 (44 F.R. 66997).

FOR FURTHER INFORMATION CONTACT: William W. Gearhart, Office of the General Counsel, U.S. International Trade Commission; telephone 202–523–0487.

By order of the Commission.

Issued: September 22, 1980.

KENNETH R. MASON,
Secretary.

Notice of Termination of Countervailing Duty Investigation Concerning Chains From Italy

AGENCY: U.S. International Trade Commission.

ACTION: Termination of countervailing duty investigation under section 704(a) of the Tariff Act of 1930, as amended, and section 104 (b)(1) of the Trade Agreements Act of 1979, with regard to Chains and Parts Thereof, of Cast-Iron or Steel from Italy.

EFFECTIVE DATE: September 17, 1980.

FOR FURTHER INFORMATION CONTACT: Mr. Lynn Featherstone, Office of Investigations; telephone 202–523–1376.

SUPPLEMENTARY INFORMATION: Chains and parts thereof, of cast-iron or steel from Italy, are currently subject to nonwaived countervailing duty orders, pursuant to action taken by the Treasury Department in 1977 (T.D. 77–249), published in the Federal Register of October 11, 1977 (42 F.R. 54799).

Section 104(b)(1) of the Trade Agreements Act of 1979 requires the Commission, in the case of a countervailing duty order issued under section 303 of the Tariff Act of 1930, upon the request of a government or group of exporters of merchandise covered by the order, to conduct an investigation. Such investigation is to determine whether an industry in the United States would be materially injured, threatened with

material injury, or that the establishment of such industry would be materially retarded if the order were to be revoked.

On January 11, 1980, the Commission received a letter from Acciaierie Weissenfels S.p.A. and Weissenfels, Inc. requesting that the Commission institute an investigation to determine whether the importation of chains and parts thereof from Italy has materially injured the U.S. chain industry. On March 28, 1980, the Commission received a request from the Delegation of the Commission of the European Communities for a review of several outstanding countervailing duty orders, including chains from Italy.

On May 2, 1980, the Commission received a request from counsel for the National Association of Chain Manufacturers, petitioners in the original countervailing duty action, to withdraw its pet tion.

While there is no provision in the Trade Agreements Act of 1979, or in its legislative history, specifically authorizing termination of a transition case investigation, termination of a properly instituted countervailing duty investigation is permitted under section 704(a) of the Tariff Act of 1930, as amended (19 U.S.C. 1671c(a)). Section 704(a) directs the Commission to solicit public comment prior to termination and approve such termination only if it is in the public interest. Since termination is permitted in cases based on newly filed countervailing duty petitions, it should also be permitted in cases based on existing countervailing duty orders where no objection is raised.

On August 6, 1980, the Commission published a notice in the Federal Register (45 F,R. 52273) requesting public comment by September 5, 1980, on the proposed termination of the Commission investigation on chains from Italy which are subject to outstanding nonwaived countervailing duty orders (T.D. 77–249.) The public comment period has now expired and no adverse comments were received.

Pursuant to its authority under section 704(a) of the Tariff Act of 1930, as amended, the Commission is therefore terminating its investigation under section 104(b)(1) of the Trade Agreements Act of 1979 on chains and parts thereof, of cast-iron or steel from Italy.

The Commission is also serving a copy of this notice on each person who has written the agency in connection with this investigation and is also notifying the Department of Commerce of its action.

By order of the Commission.

Issued: September 22, 1980.

KENNETH R. MASON,
Secretary.

Index

U.S. Customs Service

Treasury decisions:

	T.D. No.
Delegation of authority under the Federal Claims Collection Act of 1966, 31 U.S.C. 951, et seq., to certain Customs officers	80-239
Carriers bonds	80-240
Carriers bonds	80-241
Carriers bonds	80-242
Drawback decisions:	
Orange juice products	80-243-A
Beverages, canned and bottled; carbonated and noncarbonated	80-243-B
Aluminum granules, aluminum flake powder, and aluminum pigments	80-243-C
Beverages, canned and bottled; carbonated and noncarbonated	80-243-D
Orange juice, bulk concentrated	80-243-E
Chains, alloy steel load chain, etc	80-243-F
Computer systems, subsystems, equipment, memory boards	80-243-G
Creamer, nondairy	80-243-H
Chlorothene	80-243-I
Boat trailers	80-243-J
Polyester polymer pellets; filament yarn	80-243-K
Herbicides	80-243-L
Fan coolers and parts	80-243-M
Hydroxyquinoline	80-243-N
USP vanillin	80-243-O
Thermoplastics	80-243-P
Preservatives, woods	80-243-Q
Antifreeze	80-243-R
Tiles, acrylic impregnated flooring	80-243-S
Steel specialty sections, hot rolled	80-243-T
Goal	80-243-U
Caviar	80-243-V
Piece goods, bleached and printed and/or dyed	80-243-W
Car and truck frames	80-243-X
Machine tools	80-243-Y
Calcium sulfonate, overbased	80-243-Z

Customs Court

Action, commencement of; appearance by corporate chairman, C.R.D. 80-12
Appearance by corporate chairman; action, commencement of, C.R.D. 80-12
Assembled articles; switches, indicator lights and related products, C.D. 4873
Clerical error, C.D. 4874

Complaint, motion to amend, C.D. 4873
Construction:
Code of Federal Regulations, title 19:
Sec. 10.18, C.D. 4873
Sec. 10.21, C.D. 4873
Secs. 142, et seq., C.D. 4874
Sec. 171.1(a), C.D. 4873
Customs Procedural Reform and Simplification Act of 1978, C.D. 4873
Executive Order:
11888, 40 FR55275, T.D. 75-304 (1975), C.D. 4874
11906, 41 FR8758 (1976), C.D. 4874
Rules of U.S. Customs Court:
Rule 3.2, C.R.D. 80-12
Rule 4.1, C.R.D. 80-12
Rule 4.12, C.R.D. 80-12
Rule 16.3(e), C.R.D. 80-12
Rule 17.1(a), C.R.D. 80-12
Tariff Act of 1930:
Sec. 448(b), C.D. 4874
Sec. 514(a)(1), C.D. 4873
Sec. 514 (a)(2), C.D. 4873
Sec. 514(a)(3), C.D. 4873
Sec. 520(a)(3), C.D. 4873
Sec. 520(c)(1), C.D.'s 4873, 4774
Sec. 592, C.D. 4873
Sec. 618, C.D. 4873
Tariff Schedules of the United States:
Item 807.00, C.D. 4873
Schedule 8, part 1, subpart B, headnote 3, C.D. 4873
Trade Act of 1974, title V, secs. 501, et seq., C.D. 4874
U.S. Code:
Title 19:
Sec. 1448(b), C.D. 4874
Sec. 1514(a)(3), C.D. 4873
Sec. 1520(a)(3), C.D. 4873
Sec. 1520(c)(1), C.D.'s 4873, 4874
Sec. 1592, C.D. 4873
Sec. 1618, C.D. 4873
Secs. 2461, et seq., C.D. 4874
Title 28:
Sec. 1582, C.D. 4873
Sec. 2631(a), C.R.D. 80-12
Corporation, representation only by attorney at law, C.R.D. 80-12
Cross-motions for summary judgment, C.D. 4873
Customs laws; voluntary disclosure of violations of, C.D. 4873
Definition:
Exact, C.D. 4873
Exaction, C.D. 4873
Dismissal of action; jurisdiction, lack of, C.D. 4873
Error, clerical, C.D. 4874
Exaction: refusal to refund monies tendered, C.D. 4873
Exactions; jurisdiction, C.D. 4873

Fact, mistake of, C.D. 4874
Failure of timely file duty-free entry; Generalized System of Preferences, C.D. 4874
Generalized System of Preferences:
    Failure to timely file duty-free entry, C.D. 4874
    Nicaraguan sugar, C.D. 4874
Jurisdiction:
    Exactions, C.D. 4873
    Lack of; dismissal of action, C.D. 4873
Lack of jurisdiction; motion to dismiss action, C.D. 4873
Law, mistake of, C.D. 4874
Legislative history:
    Hearings, House Committee on Ways and Means on H.R. 1535, 82d Congress, 1st session (1951), p. 42, C.D. 4874
    Senate Finance Committee Report on H.R. 8149, C.D. 4873
    Senate Report No. 632, 83d Congress, 1st session (1953), p. 42, C.D. 4874
    Senate Report No. 95-778, 95th Congress, 2d session (1978), pp. 17-21, C.D. 4873
    [1953] U.S. Code Congress & Ad. News, p. 2283, C.D. 4874
Lexicographic sources:
    Black's Law Dictionary (1968), C.D. 4873
    The Random House Dictionary of the English Language (1969), C.D. 4873
    Webster's New Twentieth Century Dictionary of the English Language (Unabridged, 2d Ed.) (1959), C.D. 4873
Memorandum accompanying order; motion to compel clerk to accept summonses denied, C.R.D. 80-12
Mistake:
    Of fact; mistake of law, C.D. 4874
    Of law:
        And mistake of fact, distinguished, C.D. 4874
        Mistake of fact, C.D. 4874
    Or inadvertence in "entry"; Tariff Act of 1930, sec. 520(c)(1), C.D. 4874
Motion:
    For summary judgment, C.D. 4873
    To amend complaint, C.D. 4873
    To compel clerk to accept summonses denied; memorandum accompanying order, C.R.D. 80-12
    To dismiss action; lack of jurisdiction, C.D. 4873
Nicaraguan sugar; Generalized System of Preferences, C.D. 4874
Penalty cases, judicial review of, C.D. 4873
Refusal to refund monies tendered; exaction, C.D. 4873
Sugar, raw cane, C.D. 4874
Summary judgment, cross-motions for, C.D. 4873
Summonses, motion to compel clerk to accept, C.R.D. 80-12
Switches, indicator lights and related products; assembled articles, C.D. 4873
Tariff Act of 1930, sec. 520(c)(1); mistake or inadvertence in "entry," C.D. 4874
Treatises and related publications: Sturm, "Customs Law and Administration" (1980), p. 731, C.D. 4874
Voluntary disclosure of violation of Customs laws, C.D. 4873
Words and phrases:
    Exact, C.D. 4873
    Exaction, C.D. 4873

328-859
378
Item 950-D
continued
T1.11/3:14/43
OCT 2 1 1980

Customs Bulletin

Regulations, Rulings, Decisions, and Notices concerning Customs and related matters

and Decisions

of the United States Court of Customs and Patent Appeals and the United States Customs Court

9247
N.Y.

Vol. 14 | OCTOBER 22, 1980 | No. 43

This issue contains

T.D. 80–244 through 80–250

C.D. 4875

C.R.D. 80–13 and 80–14

Recent Unpublished Customs Service Decisions

International Trade Commission Notices

THE DEPARTMENT OF THE TREASURY
U.S. Customs Service

NOTICE

The abstracts, rulings, and notices which are issued weekly by the U.S. Customs Service are subject to correction for typographical or other printing errors. Users may notify the U.S. Customs Service, Logistics Management Division, Washington, D.C. 20229, of any such errors in order that corrections may be made before the bound volumes are published.

For sale by the Superintendent of Documents, U.S. Government Printing Office, Washington, D.C. 20402. Price: $2.25 (single copy domestic); $2.85 (single copy foreign). Subscription price: $85.00 a year domestic; $106.25 a year foreign.

U.S. Customs Service

Treasury Decisions

(T.D. 80–244)

Synopses of Drawback Decisions

The following are synopses of drawback rates issued June 26, 1980, to August 6, 1980, inclusive, pursuant to sections 22.1 through 22.5, inclusive, Customs Regulations.

In the synopses below are listed for each drawback rate approved under 19 U.S.C. 1313(a), the name of the company, the specified articles on which drawback is authorized, the merchandise which will be used to manufacture or produce these articles, the factories where the work will be accomplished, the date the statement was signed, the basis for determining payment, the Regional Commissioner who issued the rate, and the date on which it was signed.

(DRA–1–09)

Dated: September 30, 1980.

ALFRED G. SCHOLLE,
Director,
Carriers, Drawbacks and Bonds Division.

(A) Company: American Klegecell Corp.
Articles: Klegecell sheets.
Merchandise: Imported and/or drawback rigid raw blocks Klegecell; imported chemicals.
Factory: Grapevine, Tex.
Statement signed: March 25, 1980.
Basis of claim: Appearing in.
Rate issued by Regional Commissioner of Customs: Houston, June 26, 1980.

(B) Company: American Thread Co.
Articles: Cotton and polyester or synthetic yarn or thread.
Merchandise: Imported Peruvian Pima raw cotton fiber and 140 decitex, 24 filament, raw synthetic or polyester yarn or fiber.

Factory: Tallapoosa, Ga.
Statement signed: March 3, 1980.
Basis of claim: Appearing in as to Peruvian Pima raw cotton fiber; used in as to 140 decitex, 24 filament, raw synthetic or polyester yarn or fiber.
Rate issued by Regional Commissioner of Customs: Miami, July 17, 1980.

(C) Company: Automatic Power, Inc.
Articles: Sound signal emitter system.
Merchandise: Imported horn assembly.
Factory: Houston, Tex.
Statement signed: July 24, 1980.
Basis of claim: Used in.
Rate issued by Regional Commissioner of Customs: Houston, August 6, 1980.

(D) Company: Brooks Brothers.
Articles: Men's suits, sport jackets, slacks, shirts, and ties.
Merchandise: Imported wool, polyester, cotton, linen, silk fabrics, and combinations thereof.
Factories: Long Island City, N.Y.; Paterson, N.J.
Statement signed: July 9, 1980.
Basis of claim: Used in, less valuable waste.
Rate issued by Regional Commissioner of Customs: New York, July 30, 1980.

(E) Company: Cummins Engine Co., Inc.
Articles: Diesel electric generating units; diesel electric generating drive units; and diesel marine propulsion units.
Merchandise: Imported diesel engines.
Factory: Seymour, Ind.
Statement signed: June 25, 1980.
Basis of claim: Used in.
Rate issued by Regional Commissioner of Customs: Chicago, July 16, 1980.

(F) Company: Theresa Friedman & Sons, Inc.
Articles: Preserves and purees.
Merchandise: Imported strawberries, pineapples and boysenberries.
Factory: Philadelphia, Pa.
Statement signed: February 11, 1980.
Basis of claim: Used in.
Rate issued by Regional Commissioner of Customs: New York, July 22, 1980.

(G) Company: Gleason Works.
Articles: Centrifugal pump units.
Merchandise: Imported pump parts and castings.
Factory: Rochester, N.Y.
Statement signed: June 5, 1980.
Basis of claim: Used in.
Rate issued by Regional Commissioner of Customs: New York, July 7, 1980.

(H) Company: Granex Corp., U.S.A.
Articles: Acidulated coconut oil soapstock.
Merchandise: Imported crude coconut oil.
Factory: San Francisco, Calif.
Statement signed: June 11, 1980.
Basis of claim: Used in.
Rate issued by Regional Commissioner of Customs: San Francisco, July 29, 1980.

(I) Company: INA Bearing Co., Inc.
Articles: Needle bearing retainers (shells).
Merchandise: Imported strip steel.
Factory: Cheraw, S.C.
Statement signed: June 18, 1980.
Basis of claim: Used in, less valuable waste.
Rate issued by Regional Commissioner of Customs: Baltimore, July 24, 1980.

(J) Company: International Car Co. (a division of Paccar).
Article: Freight cars and other railroad cars.
Merchandise: Imported steel couplers, side frames, bolsters, brackets, and other railroad car parts.
Factory: Kenton, Ohio.
Statement signed: June 16, 1980.
Basis of claim: Used in.
Rate issued by Regional Commissioner of Customs: New York, August 6, 1980.

(K) Company: Interspace Battery Co.
Articles: Storage battery plates, parts, and materials.
Merchandise: Imported and/or drawback lead, lead oxide, and lead-antimony alloys.
Factory: West Covina, Calif.
Statement signed: March 18, 1980.
Basis of claim: Appearing in.
Rate issued by Regional Commissioner of Customs: New York, July 1, 1980.

(L) Company: J. B. Martin Co., Inc.
Articles: Velvet fabrics.
Merchandise: Imported and/or drawback filament rayon yarn.
Factory: Leesville, S.C.
Statement signed: June 17, 1980.
Basis of claim: Used in.
Rate issued by Regional Commissioner of Customs: New York, July 1, 1980.

(M) Company: Millmaster Chemical Co.
Articles: 2 methyl-2 (1 methyl propyl)-1,3 propane diol dicarbamate (mebutamate).
Merchandise: Imported 2 methyl-2 secondary butyl-1,3 propane diol (mebutamate diol).
Factory: Berkeley Heights, N.J.
Statement signed: June 4, 1980.
Basis of claim: Used in.
Rate issued by Regional Commissioner of Customs: New York, July 22, 1980.

(N) Company: The Monarch Machine Tool Co.
Articles: CNC (computer numerically controlled) vertical turret latches.
Merchandise: Imported cast iron and steel mechanical assemblies.
Factory: Sidney, Ohio.
Statement signed: March 1, 1980.
Basis of claim: Used in.
Rate issued by Regional Commissioner of Customs: New York, July 11, 1980.

(O) Company: Mountain Engine Service, Inc.
Articles: Engine pump, engine/generator, and combinations.
Merchandise: Imported internal combustion engines and parts.
Factory: Commerce City, Colo.
Statement signed: May 5, 1980.
Basis of claim: Used in.
Rate issued by Regional Commissioner of Customs: Houston, July 3, 1980.

(P) Company: NCR Corp.
Articles: Finished semiconductor devices.
Merchandise: Imported unfinished semiconductor subassemblies.
Factories: Miamisburg, Ohio; Colorado Springs and Fort Collins, Colo.
Statement signed: July 10, 1980.

Basis of claim: Appearing in.
Rate issued by Regional Commissioner of Customs: San Francisco, July 25, 1980.

(Q) Company: Optical Sciences Group, Inc.
Articles: Rear projection screens.
Merchandise: Imported polymethyl methacrylate monomer with filler (MAS–5A).
Factory: San Rafael, Calif.
Statement signed: June 23, 1980.
Basis of claim: Used in.
Rate issued by Regional Commissioner of Customs: San Francisco, July 16, 1980.

(R) Company: The Precise Corp.
Articles: Grinder-millers, power quills, jig grinders, auto drills.
Merchandise: Imported electrical motor components, ball bearings, collets, and jig grinder heads.
Factory: Racine, Wis.
Statement signed: June 30, 1980.
Basis of claim: Used in.
Rate issued by Regional Commissioner of Customs: Chicago, July 16, 1980.
Revokes: T.D. 78–379–U.

(S) Company: Precision Rolled Products, Inc.
Articles: Titanium, wire rod, bar, billet, and other semifinished forms.
Merchandise: Imported and/or drawback titanium ingots, billets, and bars.
Factories: New Kensington, Pa.; Reno, Nev.
Statement signed: June 25, 1980.
Basis of claim: Used in, less valuable waste.
Rate issued by Regional Commissioner of Customs: New York, July 7, 1980.

(T) Company: Rhone-Poulenc Inc.
Articles: Bromoxynil octanoate, Buctril (R), Buctril M (R), Bronate (R).
Merchandise: Imported and/or drawback p-hydroxybenzonitrile (HBN) or P-cyanophenylacetate (CPA), 2-methyl-4-chlorophenoxy acetic acid (MCPA).
Factory: Portland, Oreg.
Statement signed: June 20, 1980.
Basis of claim: Used in.

Rate issued by Regional Commissioner of Customs: New York, July 7, 1980.

(U) Company: Shoals American Industries, Inc.
Articles: Low-bed trailers.
Merchandise: Imported tires.
Factory: Muscle Shoals, Ala.
Statement signed: July 24, 1980.
Basis of claim: Used in.
Rate issued by Regional Commissioner of Customs: New Orleans, August 1, 1980.

(V) Company: Stevens Linen Associates, Inc.
Articles: Screen printed calendars, murals, towels, potholders, tablecloths.
Merchandise: Linen wall hanging and linen fabrics.
Factory: Dudley, Mass.
Statement signed: June 27, 1980.
Basis of claim: Used in.
Rate issued by Regional Commissioner of Customs: New York, July 28, 1980.

(W) Company: Stewart-Warner Corp.
Articles: Heat exchanger fins.
Merchandise: Imported coiled aluminum.
Factory: Indianapolis, Ind.
Statement signed: June 17, 1980.
Basis of claim: Used in, less valuable waste.
Rate issued by Regional Commissioner of Customs: Chicago, July 16, 1980.

(X) Company: W & G Instruments, Inc.
Articles: RS–50 white noise generators; RE–50 white noise receivers.
Merchandise: Imported and/or drawback RS–50 and RE–50 kits.
Factory: Livingston, N.J.
Statement signed: April 22, 1980.
Basis of claim: Used in.
Rate issued by Regional Commissioner of Customs: New York, July 1, 1980.

(Y) Company: Yamaha Music Manufacturing.
Articles: Electronic organs.
Merchandise: Imported component parts other than the cabinet
Factory: Thomaston, Ga.
Statement signed: June 25, 1980.
Basis of claim: Appearing in.

Rate issued by Regional Commissioner of Customs: San Francisco, August 1, 1980.
Revokes: T.D. 75-208-M to cover successorship from Yamaha Musical Products, Inc.

(Z) Company: De Zurik, a unit of General Signal Manufacturing Corp.
Articles: Control valves complete with actuators.
Merchandise: Imported valves.
Factories: LaGrange, Ga.; McMinnville, Tenn.; Sartell, Minn.
Statement signed: April 17, 1980.
Basis of claim: Used in.
Rate issued by Regional Commissioner of Customs: Chicago, July 18, 1980.
Revokes: T.D. 79-125-H.

(T.D. 80-245)

Synopses of Drawback Decisions

The following are synopses of drawback rates issued June 25, 1980, to August 4, 1980, inclusive, pursuant to sections 22.1 through 22.5, inclusive, Customs Regulations.

In the synopses below are listed for each drawback rate approved under 19 U.S.C. 1313(b) the name of the company, the specified articles on which drawback is authorized, the merchandise which will be used to manufacture or produce these articles, the factories where the work will be accomplished, the date the statement was signed, the basis for determining payment, the Regional Commissioner to whom the rate was forwarded, and the date on which it was forwarded.

(DRA-1-09)

Dated: September 30, 1980.

ALFRED G. SCHOLLE,
Director,
Carriers, Drawback and Bonds Division.

(A) Company: Avtex Fibers Inc.
Articles: Cellulose acetate filament yarn.
Merchandise: Cellulose acetate flake.
Factory: Meadville, Pa.
Statement signed: Arpil 29, 1980.
Basis of claim: Appearing in.
Rate forwarded to Regional Commissioners of Customs: New York and Baltimore, July 28, 1980.

328-839 O - 80 - 2

(B) Company: Chevron Chemical Co.
Articles: Lubricating oil additives.
Merchandise: Polyisobutenyl succinimide polyamine.
Factory: Belle Chasse, La.
Statement signed: May 30, 1980.
Basis of claim: Used in.
Rate forwarded to Regional Commissioner of Customs: New Orleans, July 10, 1980.

(C) Company: Chiodo Candy Co.
Articles: Confectionery.
Merchandise: Hard sugar.
Factory: Oakland, Calif.
Statement signed: November 21, 1979.
Basis of claim: Used in.
Rate forwarded to Regional Commissioner of Customs: San Francisco, June 25, 1980.

(D) Company: Cowden Manufacturing Co.
Articles: Western jeans.
Merchandise: Piece goods.
Factories: Various factories as listed in manufacturer's statement.
Statement signed: May 19, 1980.
Basis of claim: Used in, less valuable waste.
Rate forwarded to Regional Commissioner of Customs: New York, July 17, 1980.

(E) Company: The Donovan Wire & Iron Co.
Articles: Steel stampings and steel tubing.
Merchandise: Hot and cold rolled steel sheets in coil; hot rolled steel bands; galvanized steel coils.
Factories: Toledo and Perrysburg, Ohio, Clinton, Iowa.
Statement signed: January 30, 1980.
Basis of claim: Used in, less valuable waste.
Rate forwarded to Regional Commissioner of Customs: Chicago, July 22, 1980.

(F) Company: Essex Metal Alloy Co., Inc.
Articles: Type metals, babbitt metals, white metal alloys, solder, antimonial lead.
Merchandise: Lead, lead alloys, antimonial lead, antimony.
Factory: Newark, N.J.
Statement signed: January 31, 1980.
Basis of claim: Appearing in.

Rate forwarded to Regional Commissioner of Customs: New York, August 4, 1980.

(G) Company: Fiat-Allis Construction Machinery, Inc.
Articles: Various construction machinery, accessories and/or subassemblies and/or parts thereof.
Merchandise: Hot-rolled carbon steel plate; hot-rolled, high-strength, low-alloy steel plate.
Factories: Deerfield and Springfield, Ill.
Statement signed: May 2, 1980.
Basis of claim: Appearing in.
Rate forwarded to Regional Commissioner of Customs: Chicago, August 4, 1980.
Revokes: T.D. 78-227-K.

(H) Company: Foote Mineral Co.
Articles: Lo Ox Manganese (MN) metal chip; lo hydrogen MN metal chips, MN metal fines; nitrelmang metal; ground MN metal; stabilized ground metal; Solumang 90 PF; Solumang 75B; ground MN ore.
Merchandise: Pyrolusitic manganese, low oxygen manganese, low hydrogen manganese, ground manganese metal.
Factories: New Johnsonville, Tenn., Cambridge, Ohio.
Statement signed: June 3, 1980.
Basis of claim: Appearing in.
Rate forwarded to Regional Commissioner of Customs: New York, August 4, 1980.

(I) Company: Gachman Steel Co.
Articles: Special cut sizes of steel in coils, strips, sheet, blanks, plate, bars, and angles.
Merchandise: Hot- and cold-rolled steel sheet; galvanized steel sheet; hot-rolled steel in plate, bar, and angles.
Factories: Fort Worth and Houston, Tex.
Statement signed: July 24, 1979.
Basis of claim: Appearing in.
Rate forwarded to Regional Commissioner of Customs: New York, July 28, 1980.

(J) Company: General Electric Co.
Articles: Transformers, concrete reactors, regulator transformers, transformer cores, inductrol transformers, and parts thereof.
Merchandise: Steel, grain-oriented silicon core.
Factories: Pittsfield, Mass., Schenectady, N.Y.

Statement signed: December 5, 1979.
Basis of claim: Appearing in.
Rate forwarded to Regional Commissioner of Customs: New York, August 4, 1980.
Revokes: T.D. 75-312-J.

(K) Company: General Foods Corp.
Articles: Various products including candy and still beverages.
Merchandise: Hard refined sugar, liquid sugar, liquid invert sugar, citric acid.
Factories: Various factories as listed in manufacturer's statement.
Statement signed: September 28, 1979.
Basis of claim: Appearing in.
Rate forwarded to Regional Commissioners of Customs: San Francisco and New York, July 1, 1980.
Revokes: T.D. 55770-G, as amended by T.D.'s 56549-H, 68-163-J, 69-74-K, 69-132-F, 69-240-L, and 72-121-R.

(L) Company: The Goodyear Tire & Rubber Co.
Articles: Conveyor belts.
Merchandise: Galvanized steel cable, brass steel cable.
Factories: Akron and Marysville, Ohio.
Statement signed: March 7, 1980.
Basis of claim: Appearing in.
Rate forwarded to Regional Commissioner of Customs: Chicago, July 11, 1980.
Revokes: T.D. 68-87-C.

(M) Company: Hague Steel Corp.
Articles: Cold rolled stainless steel strips.
Merchandise: Stainless steel coils.
Factory: Troy, Mich.
Statement signed: December 28, 1979.
Basis of claim: Used in, less valuable waste.
Rate forwarded to Regional Commissioner of Customs: Chicago, July 17, 1980.

(N) Company: Kewaunee Engineering Corp.
Articles: Weldments for construction equipment and aircraft towing tractors such as buckets, frames, lift arms, and other parts.
Merchandise: Hot-rolled steel plate and bar.
Factory: Kewaunee, Wis.
Statement signed: March 17, 1980.
Basis of claim: Appearing in.
Rate forwarded to Regional Commissioner of Customs: New York, July 29, 1980.

(O) Company: Meredith Corp.
Articles: Completed magazines.
Merchandise: Machine coated gravure paper, magazine sections.
Factory: Des Moines, Iowa.
Statement signed: May 19, 1980.
Basis of claim: Appearing in.
Rate forwarded to Regional Commissioner of Customs: New York, July 1, 1980.
Revokes: T.D. 54965–E and T.D. 55046–H.

(P) Company: Meredith/Burda, Inc.
Articles: Magazine sections.
Merchandise: Machine-coated gravure paper.
Factory: Lynchburg, Va.
Statement signed: May 19, 1980.
Basis of claim: Appearing in.
Rate forwarded to Regional Commissioner of Customs: New York, July 3, 1980.

(Q) Company: Metal Purchasing Co., Inc.
Articles: Battery end blanks, can body blanks, cut sheets, pail blanks, numerous other metal articles.
Merchandise: Galvanized steel coils, tinplate, and tin free steel.
Factories: New York, Long Island City, and Buffalo, N.Y., Chicago, Ill., Oakland, Calif., Trenton, N.J., and Weirton, W. Va.
Statement signed: May 15, 1980.
Basis of claim: Appearing in.
Rate forwarded to Regional Commissioner of Customs: New York, July 1, 1980.

(R) Company: Pepsi-Cola Bottling Co. of Fort Lauderdale-Palm Beach, Inc.
Articles: One-way container of soft drinks.
Merchandise: Soft refined sugar.
Factory: Riviera Beach, Fla.
Statement signed: June 9, 1980.
Basis of claim: Appearing in.
Rate forwarded to Regional Commissioner of Customs: Miami, July 11, 1980.

(S) Company: Petromark, Inc.
Articles: Antifreeze.
Merchandise: Ethylene glycol (technical and antifreeze grades).
Factory: Richmond, Calif.
Statement signed: October 11, 1979.

Basis of claim: Used in.
Rate forwarded to Regional Commissioner of Customs: New York, July 1, 1980.

(T) Company: Rockwell International Corp.
Articles: Finished trailer axles aad axle assemblies, trailer axle beams.
Merchandise: Steel plate.
Factory: Kenton, Ohio.
Statement signed: December 18, 1979.
Basis of claim: Appearing in.
Rate forwarded to Regional Commissioner of Customs: New York, July 23, 1980.

(U) Company: Scranton Plastics Laminating, Inc.
Articles: Ultra high molecular weight high-density polyethylene sheet, block, rod, and shapes.
Merchandise: Ultrahigh molecular weight high-density polyethylene.
Factories: Scranton, Pa. (2).
Statement signed: May 27, 1980.
Basis of claim: Appearing in.
Rate forwarded to Regional Commissioner of Customs: New York, July 8, 1980.

(V) Company: Shelby Select Packaging Corp.
Articles: Dry beverage powdered drink bases.
Merchandise: Hard refined sugar.
Factory: Paramount, Calif.
Statement signed: June 12, 1980.
Basis of claim: Used in.
Rate forwarded to Regional Commissioner of Customs: Los Angeles, July 17, 1980.

(W) Company: Southern Fruit Distributors, Inc.
Articles: Orange from concentrate.
Merchandise: Concentrated orange juice for manufacturing.
Factory: Orlando, Fla.
Statement signed: June 6, 1980.
Basis of claim: Used in.
Rate forwarded to Regional Commissioner of Customs: Miami, July 18, 1980.

(X) Company: Jno. H. Swisher & Son, Inc.
Articles: Cigars and cigarillos.
Merchandise: Wrapper tobacco.

Factories: Jacksonville, Fla, Waycross, Ga., Cullman, Ala.
Statement signed: July 27, 1979.
Basis of claim: Used in, less valuable waste.
Rate forwarded to Regional Commissioner of Customs: Miami, July 2, 1980.

(Y) Company: TreeSweet Products Co.
Articles: Concentrated orange juice, concentrated grapefruit juice, orange juice from concentrate, and grapefruit juice from concentrate.
Merchandise: Concentrated orange juice for manufacturing and concentrated grapefruit for manufacturing.
Factories: Fort Pierce, Fla., Glendale, Ariz., Santa Ana, and Coachella, Calif.
Statement signed: April 3, 1980.
Basis of claim: Used in.
Rate forwarded to Regional Commissioners of Customs: Miami and Los Angeles, July 28, 1980.
Revokes: T.D. 66-118-F as amended by T.D.'s 69-74-R, 69-246-G, and 76-282-C; T.D. 55151-D as amended by T.D. 69-246-0; and 66-110-D as amended by T.D. 69-246-F.

(Z) Company: World Dryer Corp.
Articles: Warm air hand and hair dryers; complete cover assemblies.
Merchandise: Gray iron castings.
Factory: Berkeley, Ill.
Statement signed: October 31, 1979.
Basis of claim: Used in.
Rate forwarded to Regional Commissioner of Customs: Chicago, July 28, 1980.

(T.D. 80-246)

Bonds

Approval and discontinuance of bonds for the control of identified shipping containers

The following bonds for the control of identified shipping containers have been approved or discontinued as shown below. The symbol "D" indicates that the bond previously outstanding has been discontinued on the month, day, and year represented by the figures which follow "PB" refers to a previous bond, dated as represented by figures in parentheses immediately following, which has been discontinued If the previous bond was in the name of a different com-

pany or if the surety was different, the information is shown in a footnote at end of list.

Dated: October 2, 1980.

Name of principal and surety	Date of bond	Date of approval	Filed with district director/area director/amount
Chevron Chemical Co. of PR, P.O. Box 660 Guayama, PR; St. Paul Fire & Marine Ins. Co.	Dec. 24, 1979	Sept. 17, 1980	San Juan, PR; $20,000

(BON-3-10)

ALFRED G. SCHOLLE,
Director,
Carriers, Drawback and Bonds Division.

(T.D. 80-247)

Approval and discontinuance of consolidated aircraft bonds (air carrier blanket bonds), Customs form 7605

The following consolidated aircraft bonds have been approved or discontinued as shown below. The symbol "D" indicates that the bond previously outstanding has been discontinued on the month, day, and year represented by the figures which follow. "PB" refers to a previous bond, dated as represented by the figures in parentheses immediately following, which has been discontinued. If the previous bond was in the name of a different company or if the surety was different, the information is shown in a footnote at the end of the list.

Dated: October 2, 1980.

Name of principal and surety	Date of bond	Date of approval	Filed with district director/area director/amount
Alm Antillean Airlines, Netherlands Antilles Corp., Dr. Albert Plesman Airport, Curacao Netherlands Antilles; Aetna Ins. Co.	July 25, 1980	Aug. 21, 1980	Miami, Fla.; $100,000

The foregoing principal has not been designated as a carrier of bonded merchandise.

(BON-3-01)

ALFRED G. SCHOLLE,
Director,
Carriers, Drawback and Bonds Division.

(T.D. 80-248)

Foreign Currencies—Daily Rates for Countries Not on Quarterly List

Rates of exchange based on rates certified to the Secretary of the Treasury by the Federal Reserve Bank of New York for the Brazil cruzeiro, People's Republic of China yuan, Hong Kong dollar, Iran rial, Philippines peso, Singapore dollar, Thailand baht (tical), and Venezuela bolivar

The Federal Reserve Bank of New York, pursuant to section 522(c), Tariff Act of 1930, as amended (31 U.S.C. 372(c)), has certified buying rates for the dates and foreign currencies shown below. The rates of exchange, based on these buying rates, are published for the information and use of Customs officers and others concerned pursuant to part 159, subpart C, Customs Regulations (19 CFR 159, subpart C).

Brazil cruzeiro:	
September 22–23, 1980	$0.0176
September 24–26, 1980	.0173
People's Republic of China yuan:	
September 22, 1980	$0.679440
September 23–26, 1980	.676727
Hong Kong dollar:	
September 22, 1980	$0.200240
September 23, 1980	.200884
September 24, 1980	.200844
September 25, 1980	.200763
September 26, 1980	.200180
Iran rial	Not available
Philippines peso:	
September 22–26, 1980	$0.1325
Singapore dollar:	
September 22, 1980	$0.473149
September 23, 1980	.473821
September 24, 1980	.475285
September 25, 1980	.475172
September 26, 1980	.474834
Thailand baht (tical):	
September 22–26, 1980	$0.0488
Venezuela bolivar:	
September 22–26, 1980	$0.2329

(LIQ-3-01 O:C:E)

Dated: September 26, 1980.

NANCY I. BROWN,
Chief,
Customs Information Exchange.

328-839 O - 80 - 3

(T.D. 80-249)

The table below lists rates of exchange, in U.S. dollars for certain foreign currencies, which are based upon rates certified to the Secretary of the Treasury by the Federal Reserve of New York under provisions of section 522(c), Tariff Act of 1930, as amended (31 U.S.C. 372(c)), for the information and use of Customs officers and others concerned pursuant to part 159, subpart C, Customs Regulations (19 CFR 159, subpart C).

QUARTER BEGINNING: OCTOBER 1, 1980 THROUGH DECEMBER 31, 1980

Country	Name of currency	U.S. dollars
Australia	Dollar	$1.1749
Austria	Schilling	.078309
Belgium	Franc	.034518
Canada	Dollar	.853971
Denmark	Krone	.179244
Finland	Markka	.273197
France	Franc	.238521
Germany	Deutsche Mark	.552944
India	Rupee	.1290
Ireland	Pound	2.0750
Italy	Lira	.001162
Japan	Yen	.004796
Malaysia	Dollar	.470256
Mexico	Peso	.043346
Netherlands	Guilder	.509424
New Zealand	Dollar	.9825
Norway	Krone	.205761
Portugal	Escudo	.019960
Republic of South Africa	Rand	1.3171
Spain	Peseta	.013532
Sri-Lanka	Rupee	.062383
Sweden	Krona	.240471
Switzerland	Franc	.609013
United Kingdom	Pound	2.3910

(LIQ-3-01-O:C:E)
Dated: October 1, 1980.

NANCY I. BROWN,
Chief,
Customs Information Exchange.

(T.D. 80-250)

Notice of Recordation of Trade Name Washington Stove Works

On July 1, 1980, there was published in the Federal Register (45 F.R. 44438–44439) a notice of application for the recordation under section 42 of the act of July 5, 1946, as amended (15 U.S.C. 1124), of the trade name Washington Stove Works. The notice advised that prior to final action on the application, filed pursuant to section 133.12, Customs Regulation (19 CFR 133.12), consideration would be given to relevant data, views, or arguments submitted in opposition to the recordation and received not later than 30 days from the date of publication of the notice. No responses were received in opposition to the application.

The name "Washington Stove Works" is hereby recorded as the trade name of Washington Stove Works, a corporation organized under the laws of the State of Washington, located at 3402 Smith, Everett, Wash. 98201, when applied to freestanding fireplaces, wood heaters, marine ranges, cook stoves, both oil and wood/coal, manufactured in Yugoslavia. No foreign firm is authorized to use the trade name.

Dated: October 8, 1980.

HARVEY B. FOX,
Director,
Office of Regulations and Rulings.

[Published in the Federal Register, Oct. ——, 1980 (45 F.R. ———]

Decisions of the United States Customs Court

United States Customs Court

One Federal Plaza
New York, N.Y. 10007

Chief Judge

Edward D. Re

Judges

Paul P. Rao
Morgan Ford
Scovel Richardson
Frederick Landis
James L. Watson
Herbert N. Maletz
Bernard Newman
Nils A. Boe

Senior Judge

Samuel M. Rosenstein

Clerk

Joseph E. Lombardi

Customs Decision

(C.D. 4875)

OVERTON & CO., PLAINTIFF *v.* UNITED STATES, DEFENDANT

Jordan Bars

BARS—SHAPE OF CROSS-SECTION—MATERIALS

So-called Jordan bars with a double bead or spur did not have a cross section in any of the shapes specified in headnote 3(d), schedule 6, part 2, subpart B, and hence were erroneously classified by Customs as bars under item 608.52, TSUS. The merchandise was ultimately dedicated to use and used solely as parts of Jordan Refiners, which are machines used for grinding paper or preparing paper stock. However, the merchandise required substantial additional processing after importation before it could be used as parts

of Jordan Refiners. Consequently, in their condition as imported, the Jordan bars were materials rather than parts, and were properly dutiable as shapes under item 609.82, TSUS, as primarily claimed by plaintiff. *John V. Carr & Son, Inc.* v. *United States*, 72 Cust. Ct. 19, C.D. 4500 (1974).

Court No. 77-6-01002

[Judgment for plaintiff.]

(Decided September 23, 1980)

Doherty and Melahn, Esqs. (*William E. Melahn* and *Peter T. Middleton*, Esqs. of counsel) for the plaintiff.

Alice Daniel, Assistant Attorney General, *Joseph I. Liebman*, Attorney in Charge, Field Office for Customs Litigation (*John J. Mahon*, Esq., at the trial and *James A. Resti*, Esq., on the brief), for the defendant.

NEWMAN, Judge: The issue in this case concerns the proper tariff classification for certain imported steel products described on the commercial invoice included in the official entry documents as "Hot Rolled Sectional Steel, alloyed, not annealed, our brand '65 EN 2 G', acc. to AISI 8665, Profile D-84555, in bars of 89½" with shorts max. 5%, Tol. +1", our no. 567, ends sawn". The subject merchandise was exported from West Germany and entered at the Port of New York in 1975. Plaintiff, a customhouse broker, entered the merchandise for the account of Wetherell Bros. Co., the ultimate consignee.

In liquidating the entry, Customs classified the importation under the provision in item 608.52, TSUS, for bars of alloy steel, and assessed duty at the rate of 10.5 per centum ad valorem, plus additional duties on the chromium and molybdenum content.[1] Plaintiff primarily claims that the merchandise is properly dutiable under item 609.82, TSUS, as angles, shapes, and sections of alloy iron or steel, at the rate of 0.1 cent per pound plus 2 per centum ad valorem, plus additional duties on the chromium and molybdenum content. Alternatively, plaintiff claims that the merchandise is dutiable as parts for pulp or paper machines under either item 668.04, TSUS, at the rate of 7 per centum ad valorem, or under item 668.06, TSUS, at the rate of 3.5 per centum ad valorem.

Plaintiff also advances the claim that the Government's classification of the merchandise under item 608.52, TSUS, constituted a change in a prior established and uniform practice of classifying the subject merchandise under item 609.82, TSUS, without notice in

[1] Additional duties were assessed on the chromium and molybdenum content at the rates prescribed in items 607.01 and 607.02, TSUS. See headnote 4, subpart B, part 2, schedule 6. These additional duties are not contested.

violation of section 315(d) of the Tariff Act of 1930, as amended (19 U.S.C. 1315(d)).

For the reasons indicated hereinafter, plaintiff's primary claim under item 609.82, TSUS, is sustained.

Statutes Involved

Schedule 6, Part 2, Subpart B, TSUS

Subpart B headnotes:

* * * * * * *

3. *Forms and condition of iron or steel.*—For the purposes of this subpart, the following terms have the meanings hereby assigned to them:

* * * * * * *

(d) *Bars:* Products of solid section not conforming completely to the respective specifications set forth herein for blooms, billets, slabs, sheet bars, wire rods, plates, sheets, strip, wire, rails, joint bars, or tie plates, and which have cross sections in the shape of circles, segments of circles, ovals, triangles, rectangles, hexagons, or octagons. Deformed concrete reinforcing bars are hot-rolled steel bars, of solid cross section, having deformations of various patterns on their surfaces.

* * * * * * *

(j) *Angles, shapes, and sections:* Products which do not conform completely to the respective specifications set forth herein for blooms, billets, slabs, sheetbars, bars, wire rods, plates, sheets, strip, wire, rails, joint bars, or tie plates, and do not include any tubular products.

* * * * * * *

Classified:

Bars of steel:

* * * * * * *

Other bars:

* * * * * * *

608.52	Alloy steel	10.5% ad val.+ additional duties.

Primary claim:

Angles, shapes, and sections, all the foregoing, of iron or steel, hot-rolled, forged, extruded, or drawn, or cold-formed or cold-finished, whether or not drilled, punched, or otherwise advanced; sheet piling of iron or steel:

Angles, shapes, and sections:

Hot-rolled; or, cold-formed and weighing over 0.29 pound per linear foot:

Not drilled, not punched, and not otherwise advanced:

* * * * * * *

609.82	Alloy iron or steel	0.1¢ per lb. + 2% ad val. + additional duties

Alternative Claims:

Schedule 6, Part 4, Subpart D:

Machines for making cellulosic pulp, paper, or paperboard; machines for processing or finishing pulp, paper, or paperboard, or making them up into articles:

* * * * * * *

668.04	Parts of the foregoing machines:	
	Bed plates, roll bars, and other stocktreating parts for pulp or paper machines	7% ad val.
	Other:	
668.06	Parts of machines for making cellulosic pulp, paper or paperboard	3.5% ad val.

19 U.S.C. 1315

§ 1315. Effective date of rates of duty.

* * * * * * *

(d) No administrative ruling resulting in the imposition of a higher rate of duty or charge than the Secretary of the Treasury shall find to have been applicable to imported merchandise under an established and uniform practice shall be effective with respect to articles entered for consumption or withdrawn from warehouse for consumption prior to the expiration of thirty days after the date of publication in the weekly Treasury decisions of notice of such ruling; but this provision shall not apply with respect to the imposition of antidumping duties, * * *.

The Record

At the trial, plaintiff presented the testimony of four witnesses: James Harvey McKenney III, general manager in charge of sales and

purchasing for Wetherell Bros. Co.; Reinhold Schempp, retired employee of the Crucible Steel Co. of America (presently called the Crucible Specialty Division of Colt Industries); Harvey McKenney, president of Wetherell Bros. Co.; and Ralph E. Baldwin, a consultant with Black Clawson Co. Additionally, plaintiff introduced in evidence the official entry papers as an unnumbered exhibit and 14 numbered exhibits. Defendant called no witnesses, but introduced into evidence two exhibits.

The pertinent facts are:

Plaintiff's profile D84555, known as a "Jordan profile", or "Jordan bar", is ¼ inch thick, 2¾ inches wide, and 89½ inches in length. The cross sectional shape of the merchandise, as depicted by plaintiff's exhibit 1, is set forth below:

Jordan bars are a specialty rather than a stock item, and were used only for incorporation in a tapered plug of a Jordan Refiner, which is used to grind paper or prepare paper stock. A double spur or bead projects from the top and bottom horizontal surfaces of the profile D84555 and runs the full 89½-inch length of the material. This double bead or spur is made to precise specifications as to the location and height, and is essential to the use of the Jordan bars in Jordan Refiners.

The D84555 profiles must be processed after importation before they can be used as parts of Jordan Refiners. Black Clawson Co., who purchased the imported merchandise from Wetherell, processed it for installation in a tapered plug of a Jordan Refiner. After the profiles were taken from storage, they were cut into two pieces, "to make a long and a short Jordan bar" (R. 126). These pieces were then trimmed, punched, beveled, and their bottom edges ground. Some customers of Black Clawson required, in addition to the foregoing processing, heat treating of the material, and often the ultimate customer (papermill) put sand on the material which, then, was further ground. Each set of Jordan bars was custom-made for each Jordan machine.

Prior to 1966 the merchandise was classified by Customs as bars; from 1966 to the entry in this case in 1975, the merchandise was classified as shapes; and since the entry in this case, the merchandise has been classified by Customs as bars. Wetherell received no notice concerning the change in classification of the merchandise in 1975.

Finally, there is no dispute that the subject merchandise is an alloy iron or steel shape, hot-rolled (see paragraph 3 of the complaint and of the answer), weighing over 0.29 pound per linear foot; and that it was not drilled, punched, or otherwise advanced.

Plaintiff's Contentions

Plaintiff primarily contends that the Jordan bars are shapes within the meaning of that term as defined in headnote 3(j) of schedule 6, part 2, subpart B, TSUS, and are classifiable under item 609.82, TSUS. Alternatively, plaintiff argues that since the merchandise is dedicated to use as parts of Jordan Refiners, it is classifiable either as stock-treating parts for pulp or paper machines under item 668.04, TSUS, or as other parts of machines for making paper under item 668.06, TSUS. Plaintiff also maintains that the Government did not follow the procedure prescribed in section 315(d) of the Tariff Act of 1930, as amended, for changes in an established and uniform practice in classifying the imports under item 609.82, TSUS.

Defendant's Contentions

Defendant insists that the merchandise falls within the definition of "bars" assigned to that term by headnote 3(d) of schedule 6, part 2, subpart B, TSUS, and therefore the merchandise was properly assessed under item 608.52, TSUS. Further, defendant argues that the merchandise constitutes a material, and as such, is precluded from classification as parts under item 668.04 or item 668.06, TSUS. However, according to defendant, if the imports are parts, they are classifiable. as stock-treating parts within the purview of item 668.04, TSUS. Lastly, respecting plaintiff's claim under section 315(d), defendant urges that there is no evidence of a finding nor of the existence of an established and uniform practice of classification of the merchandise under item 609.82, TSUS.

Opinion

I

At the outset, it should be noted that we are not required to ascertain the common meaning of the term "bar" or "shape," since those terms have been statutorily defined. Such statutory definitions are, of course, determinative of the scope of the tariff provisions for "bars" and "angles, shapes, and sections."

Thus, we first address the issue of whether the imports fall within the definition of "bars" (as classified by Customs) assigned to that term in headnote 3(d), schedule 6, part 2, subpart B. I agree with defendant's contention that if the subject merchandise is encompassed by the definition of "bars" in headnote 3(d), its classification as "shapes" is precluded by the definition of "angles, shapes, and sections" in headnote 3(j).

The term "bars" is defined in headnote 3(d) as:

> Products of solid section * * * which have cross sections in the shape of circles, segments of circles, ovals, triangles, rectangles, hexagons, or octagons.

The only geometric shape mentioned in headnote 3(d) that is claimed applicable by defendant is the rectangle. Plaintiff vigorously disputes that the merchandise has a cross-section in the shape of a rectangle, pointing specifically to the double bead or spur protruding from the flat surfaces and running the length of the profiles.[2]

This issue under headnote 3(b) as to whether the shape of the cross section is rectangular is best resolved by an examination of a sample, as represented by plaintiff's exhibit 1. Webster's Third New International Dictionary, Unabridged (1966), page 1899, defines the term "rectangle" as a "parallelogram all of whose angles are right angles." Plainly, by virtue of the protruding double bead or spur, the cross section of exhibit 1 is not the shape of a rectangle. Moreover, there is nothing in the record suggesting that the double bead or spur is an aberration, unintended, or is removed after importation as useless. On the contrary, the record clearly demonstrates that the double bead in the D84555 profile is included in its design specifications and is essential for its use in the Jordan Refiner. Defendant did not offer any evidence by way of testimony or otherwise to show that the the iron and steel industry recognizes the cross-sectional shape of the merchandise to be a rectangle.

Rather, defendant posits that in determining the cross sectional shape of the merchandise, the double bead or spur should be ignored as a matter of law. This hypothesis is predicated upon the inclusion in headnote 3(d) of a definition of "deformed concrete reinforcing bars." A sample of a deformed concrete reinforcing bar was received in evidence as defendant's exhibit A. An examination of exhibit A reveals that it has a double spur as well as a spiral pattern running the length of the bar. Nonetheless, I am unable to agree with defendant's reasoning that because headnote 3(d) expressly includes a definition of deformed concrete reinforcing bars, the double bead on the subject merchandise should be disregarded in determining its cross sectional shape. By specifically including a definition of deformed concrete reinforcing bars in headnote 3(d), it is apparent Congress recognized that these specialized bars, because of their "having deformations of various patterns on their surfaces", did not fit the general definition assigned to bars.[3] Hence, I see no inference from the specific inclusion of the reinforcing bars in headnote 3(d) that Congress intended to

---

[2] Plaintiff has raised no issue concerning the rounded sides of exhibit 1, and that aspect of the exhibit has been disregarded for the purposes of the decision in this case.

[3] It is also noted that in 1975 deformed concrete reinforcing bars were provided for eo nomine in items 608.40 through 608.42, TSUS.

include in the definition of bars other merchandise not possessing the required cross sectional shapes.

Defendant also urges that the double spur be disregarded on the basis that headnote 3(d) does not require the cross section of the merchandise be perfectly rectangular, circular, etc., but merely "that the product have a cross section in the shape of a rectangle, circle, etc." (brief at 21). Defendant has not cited any legislative history or other authority that shows Congress' intention to make any distinction between a rectangular cross-section and a cross-section in the shape of a rectangle.

The short of the matter is that the cross-section of the subject merchandise does not conform to the shape specifications set forth in headnote 3(d) for bars, and consequently the Government's classification of the merchandise under item 608.52, TSUS, was erroneous. It therefore follows that the merchandise is not precluded from classification as "angles, shapes, and sections" as defined in headnote 3(j), schedule 6, part 2, subpart B, TSUS.

II

We now turn to plaintiff's claims. I have concluded that the merchandise is a shape properly dutiable under item 609.82, TSUS, and thus plaintiff's primary claim is sustained.

Although the Jordan bars were ultimately dedicated and used as parts of Jordan Refiners, in their condition as imported they required substantial additional processing before they could be used in Jordan machines. In point of fact, Jordan bars must be custom-made for the particular Jordan machine in which they are to be installed. Hence, the D84555 profiles in their imported condition were materials rather than parts, and since they meet the requirements of headnote 3(j), they are properly classifiable under item 609.82, TSUS.

In *John V. Carr & Son. Inc.* v. *United States*, 72 Cust. Ct. 19, C.D. 4500 (1974), Judge Maletz exhaustively considered the tariff distinction between the TSUS provisions for angles, shapes and sections and parts, and made the following pertinent observations (71 Cust. Ct. at 27):

> It may well be that most angles, shapes and sections are ultimately dedicated and used as parts of articles and that such ultimate use determines the form in which the angles, shapes, and sections are made. See *United States* v. *The Singer Manufacturing Company*, 37 CCPA 104, 106, 107, C.A.D. 427 (1950). But this scarcely means that all angles, shapes and sections are parts per se. Thus, if in its imported condition, an angle, shape or section has been processed or advanced in manufacture only to a point where substantial additional processing is necessary before

it can be used as a part of a given article, the import would not be classifiable as a part, but rather would be considered a material and thus (if meeting the other statutory requirements) classifiable under a provision for angles, shapes, and sections. See e.g., *United States* v. *The Singer Manufacturing Company, supra*, 37 CCPA 104; *Associated Metals & Minerals Corp.* v. *United States, supra*, 65 Cust. Ct. 586.

Following the rationale of *Carr, supra*, the Jordan bars are properly classifiable under item 609.82, TSUS, as "angles, shapes, and sections", and plaintiff's alternative claims under items 668.04 and 668.06 are without merit.[4]

In view of the holding herein, it is unnecessary to reach plaintiff's claim that there was an established and uniform practice from 1966 to 1975 of classifying the Jordan profiles under item 609.82, which the Government changed without giving the notice required by section 315(d) of the Tariff Act of 1930, as amended.

For the reasons stated herein, plaintiff's primary claim under item 609.82, TSUS, is sustained, but its alternative claims are dismissed. Judgment will be entered accordingly.

---

[4] It is well established that the mere fact that imported merchandise is dedicated to use in making particular articles or parts does not take the merchandise out of the material class. See, e.g., *The Harding Co. et al.* v. *United States*, 23 CCPA 250, T.D. 48109 (1936) (automobile brake lining); *American Import Co.* v. *United States*, 26 CCPA 72, T.D. 49612 (1938) (fishing leader gut); *Bendix Mouldings, Inc.* v. *United States*, 73 Cust. Ct. 204, C.D. 4576, 388 F. Supp. 1193 (1974) (wood molding for picture or mirror frames).

Decisions of the United States Customs Court

Customs Rules Decisions

(C.R.D. 80–13)

ALBERTA GAS CHEMICALS, INC., PLAINTIFF, *v.* UNITED STATES, DEFENDANT

Memorandum Opinion and Order on Plaintiff's Motion Brought on by an Order to Show Cause Why Sale of General Order Merchandise Should Not Be Enjoined

Court No. 79–8–01295

[Plaintiff's motion granted.]

(Dated September 22, 1980)

Freeman, Meade, Wasserman & Schneider (*Bernard J. Babb* of counsel) for the plaintiff.

Alice Daniel, Assistant Attorney General; *David M. Cohen*, Director, Commercial Litigation Branch; *John J. Mahon* and *Glenn E. Harris*, trial attorneys, for the defendant.

NEWMAN Judge: We are faced again with the oft-litigated question of the Customs Court's equitable powers. In that connection, see my recent memorandum and orders in *Industrial Fasteners Group, American Importers Association* v. *United States, et al.*, 85 Cust. Ct. ——, C.R.D. 80–8, —— F. Supp. —— (Aug. 20, 1980), wherein this court for the first time issued a temporary restraining order and preliminary injunction in a matter of novel impression under section 516A(c)(2) of the Tariff Act of 1930, as added by the Trade Agreements Act of 1979 (Public Law 96–39, 93 Stat. 144, enacted July 26, 1979).[1]

[1] This provision empowers the Customs Court to enjoin the liquidation of entries in the case of a determination described in par. (2) of subsec. (a).

328-839 O - 80 - 4

The issue now presented by plaintiff's motion, brought on by an order to show cause, is whether the Customs Court is empowered to grant injunctive relief pursuant to 28 U.S.C. 1651(a), commonly known as the "All Writs Act". That act provides:

> (a) The Supreme Court and all courts established by act of Congress may issue all writs necessary or appropriate in aid of their respective jurisdictions and agreeable to the usages and principles of law.

I have concluded that the foregoing statute is applicable to the Customs Court and that injunctive relief may be granted under the facts and circumstances of this case.

Pursuant to plaintiff's motion, and after a conference attended by counsel for the parties, this court on August 13, 1980, issued an order to show cause returnable on August 20, 1980:

> Why an order should not be entered directing the Regional Commissioner at the Port of New York and all other officials and agents of the United States to maintain one shipment, consisting of 25x55-gallon drums of methyl alcohol imported by the plaintiff from Canada on August 14, 1979, and now being stored in the mercantile Warehouse in Newark, N.J., under General Order No. 110–79, in its present status and unsold until 30 days after the decision of this court on the merits has become final.

The order to show cause further provides:

> Pending the hearing and determination of this motion and the entry of an order thereon, that all proceedings by the defendant, and any of its officers and agents in connection with the sale or other disposal of the merchandise or its removal from its present location, be, and is, hereby stayed by this court.

The above order to show cause, which was issued on the eve of the expiration of the 1 year general order period, was signed in the context of the following undisputed factual background.

On March 23, 1979, the Treasury Department (Treasury) determined that methyl alcohol from Canada is being, or is likely to be, sold at less than fair value (LTFV) within the meaning of section 201(a) of the Antidumping Act of 1921, as amended (19 U.S.C. 160(a)). That determination was published in the Federal Register on March 30, 1979 (44 F.R. 19090).

On June 29, 1979, the U.S. International Trade Commission determined, in investigation No. AA1921–202, that an industry in the United States is likely to be injured by reason of the importation of methyl alcohol from Canada which Treasury had determined is being, or is likely to be, sold at LTFV. The Commission's determination was published on July 12, 1979 (44 F.R. 40734).

On July 23, 1979, Treasury issued a finding of dumping respecting methyl alcohol from Canada (T.D. 79–210), which finding was published in the Federal Register on July 27, 1979 (44 F.R. 44154).

The subject merchandise was exported from Canada on August 13, 1979. Entry documents (Customs form 7501)[2] and a check for estimated duties were presented by plaintiff to the appropriate Customs officer at the Port of New York on August 15, 1979. However, the entry was rejected by Customs for the reason that the importer refused to proffer an antidumping bond (Customs form 7591) in accordance with 19 U.S.C. 167 and 19 CFR 153.50.

Further, on August 15, 1979, upon exclusion of the merchandise from entry, the merchandise was assigned General Order No. 110–79 and was placed in the Mercantile Warehouse, 1300 Newark Turnpike, Newark, N.J. The court has been advised by counsel that the merchandise presently remains stored in that warehouse.

On August 20, 1979, following the denial of its administrative protest, plaintiff commenced the present action contesting the Regional Commissioner's decision to exclude the merchandise from entry and his refusal to deliver the subject merchandise without the filing of an antidumping bond. The gravamen of plaintiff's action is that the Secretary's finding of dumping is illegal, null, and void; and that therefore the Regional Commissioner erred in demanding the posting of an antidumping bond, and in excluding the merchandise from entry and delivery to plaintiff in the absence of such bond. Plaintiff seeks an order directing the Regional Commissioner to accept plaintiff's entry and deliver the merchandise to plaintiff without filing an antidumping bond.

Defendant's motion to dismiss the action or alternatively for summary judgment was denied by this court on January 17, 1980. *Alberta Gas Chemicals, Inc.* v. *United States*, 84 Cust. Ct. ——, C.R.D. 80–1, 483 F. Supp. 303 (1980). There, it was determined that pursuant to 28 U.S.C. 1582(a)(4) this court has jurisdiction to determine the legality of the exclusion of plaintiff's merchandise from entry for refusal to file an antidumping bond, and of the Secretary's underlying finding of dumping. Defendant's alternative motion for summary judgment was held to be premature under rule 8.2(a) inasmuch as defendant had not then filed an answer. Defendant has since filed its answer to the complaint, and the action is presently pending before the court on cross-motions for summary judgment.

It appears from plaintiff's moving affidavit and attached documents that the merchandise has now been in a general order status for more

[2] Consumption entry No. 79-638078-8

than 1 year, and therefore is subject to sale at public auction as unclaimed and abandoned merchandise pursuant to 19 U.S.C. 1491 as amended;[3] that plaintiff has no intention of abandoning the subject merchandise, but rather is asserting a claim for its entry and delivery in the present action; and that plaintiff's efforts to obtain an informal agreement by Customs to continue holding the merchandise in a general order status until a decision in this litigation becomes final were not successful.[4]

On the return date of the order to show cause (Aug. 20, 1980) oral argument was heard by the court. Defendant did not oppose plaintiff's motion, conceding arguendo that if the court has subject matter jurisdiction (which defendant does not concede), the Customs Court has the power to grant the equitable relief sought by plaintiff under the All Writs Act (T. Oral Arg. 5). Thus, there is no dispute between the parties that the All Writs Act is applicable to the Customs Court under the circumstances of this case.

The Customs Court was established by an act of Congress on May 28, 1926, superseding the Board of General Appraisers.[5] 19 U.S.C. 405a. Moreover, in 1956, the Customs Court was declared to be a court established under Article III of the Constitution of the United States. 28 U.S.C. 251. Consequently, I have no doubt that Congress intended that the All Writs statute, 28 U.S.C. 1651(a), could be applied by this court in appropriate circumstances.

Although 28 U.S.C. 1651(a) refers to "all writs necessary or appropriate in aid of their respective jurisdictions", courts have interpreted the statute as authorizing injunctions to protect and effectuate their judgments. See *Baker* v. *Gotz*, 415 F. Supp. 1243, 1247 (D. Del. 1976), aff'd, 546 F. 2d 415 (3d Cir. 1976). Generally, the object of a preliminary injunction is to preserve the status quo until a full and final hearing on the merits. *Cywan* v. *Blair*, 16 F. 2d 279 (N.D. Ill.

---

[3] This statutory provision, so far as pertinent, reads: "Any entered or unentered merchandise (except merchandise entered under sec. 557 of this act [19 U.S.C. 1557], but including merchandise entered for transportation in bond or for exportation) *which shall remain in customs custody for 1 year from the date of importation thereof*, without all estimated duties and storage or other charges thereon having been paid, shall be considered unclaimed and abandoned to the Government and shall be appraised and sold by the appropriate customs officer at public auction under such regulations as the Secretary of the Treasury shall prescribe. * * *" [Italic added.]

See also 19 CFR, part 127.

[4] A letter dated Aug. 11, 1980, from the Regional Commissioner of Customs at the Port of New York to plaintiff's counsel informed plaintiff that under the law (19 U.S.C. 1491) and regulations, the Commissioner had no administrative discretion to extend the 1 year general order period, and hence the merchandise would be scheduled for sale at the next regular sale occurring after Aug. 14, 1980.

[5] Significantly, Congress has before it historic legislation (S. 1654—entitled the "Customs Courts Act of 1979", and H.R. 7540—entitled the "Customs Courts Act of 1980"), providing inter alia for greatly expanding the jurisdiction of the Customs Court, changing the court's name to U.S. Court of International Trade, and granting to that court all of the powers in law and equity of, or as conferred by statute upon, a district court of the United States. These companion bills, respectively, were passed unanimously: S. 1654 on Dec. 18, 1979, and H.R. 7540 on this very day. The Senate and House versions are awaiting final congressional resolution before transmittal of the legislation to the President.

1926). The Customs Court is a court of limited jurisdiction. Its authority to grant injunctive relief under 28 U.S.C. 1651(a) is strictly auxiliary in aid of its jurisdiction. Moreover, "(e)quity power can apply only to matters within a court's jurisdiction and cannot be exercised in disregard of the mandatory requirements of the jurisdictional statute". *United States* v. *Boe*, 64 CCPA 11, 18 (n.9), C.A.D. 1177, 543 F. 2d 151 (1976).

As aptly observed by Judge Watson in *Russell Stanfield Dexter* v. *United States*, 78 Cust. Ct. 179, 180, C.R.D. 77-1, 424 F. Supp. 1069 (1977):

> The All Writs Act does not give this court jurisdiction to require anyone to satisfy the preconditions of jurisdiction. *It only gives the court instruments with which to effectuate existing jurisdiction.* [Italic added.]

And in *Alberta Gas Chemicals, Inc.* v. *W. Michael Blumenthal, Secretary of the Treasury, et al.*, 82 Cust. Ct. 77, 88–89, C.D. 4792, 467 F. Supp. 1245 (1979), this court stated:

> Similarly, the All Writs Act, 28 U.S.C. 1651, also relied upon by plaintiff, does not give this court jurisdiction to grant plaintiff the requested relief, *but may only be utilized in aid of existing jurisdiction, that is to say, where the jurisdictional prerequisites of 28 U.S.C. 1582 are present.* [Italic added.]

See also: *Matsushita Electric Industrial Company, Ltd., et al.* v. *The United States Treasury Department et al.*, 67 Cust. Ct. 328, C.D. 4292 (1971), aff'd, 60 CCPA 85, C.A.D. 1086, 485 F. 2d 1402 (1973), cert. denied, 414 U.S. 821 (1973); *Flintkote Company, Glens Falls Division* v. *United States (Independent Cement Co., Party in Interest)*, 82 Cust. Ct. 305, C.R.D. 79-5, 467 F. Supp. 626 (1979); and *J. C. Penney Company, Inc.* v. *United States Treasury Department et al.*, 439 F. 2d 63, 68 (2d Cir. 1971), cert. denied, 404 U.S. 869 (1971).

Unlike the circumstances in the above-cited authorities wherein the courts declined to grant equitable relief pursuant to the All Writs Act, plaintiff here has not sought to use that act as a vehicle by which the court should exercise jurisdiction. Rather, plaintiff urged and this court heretofore decided in C.R.D. 80-1, that the present case has been properly brought to contest the denial of a protest against an administrative decision cognizable under 19 U.S.C. 1514(a)(4) and 28 U.S.C. 1582(a)(4); and that the court has jurisdiction to decide the issues pertinent to that administrative decision. The All Writs Act gives this court the power to grant the requested relief only in aid of, and in this situation, in preservation of its jurisdiction. The significance of this application of the All Writs Act lies in the obvious fact that the imported merchandise is the res of the action. Its sale at public auction by the Customs Service would make the merchandise

unavailable for entry by, and delivery to plaintiff, in the event of a final decision on the merits favorable to plaintiff. Plainly, under such circumstances the fruits of litigation would be lost by a sale at public auction at this time, plaintiff would suffer irreparable harm, and such sale would render the issue before the court moot.

In sum, it is clear from the circumstances presented here, that the granting of the relief sought by plaintiff would maintain the advisable status quo, and is in aid of the court's jurisdiction. Such relief is admittedly within the power of the court to grant, pursuant to the All Writs Act.

Lastly, the granting of injunctive relief pendente lite does not infringe upon 19 U.S.C. 1451, as any sale of the merchandise is merely suspended or deferred until after final determination of the merits of this litigation. It may be, as suggested by counsel for defendant, that during the period of restraint the subject merchandise may decline in value. A claim that injurious consequences will result to the Government if the general order merchandise is not promptly sold may not, of course, be disregarded by the court; nevertheless, it presents a question addressed not to the power of the court, but to its discretion or the propriety of the exercise of its power. Here, defendant's fear of a loss of value of the subject merchandise has been completely obviated by including in the proposed order—following this court's suggestion—a provision for security in an amount that has been mutually agreed upon by the parties.

For the reasons set forth herein, this court has entered the attached order (which has been jointly proposed by the parties), and this memorandum shall be deemed to be incorporated into and to supplement that order.

Order

Upon considering the motion of the plaintiff and the order of this court issued August 13, 1980, directing the defendant to show cause why this present order should not issue, and upon consideration of defendant's consent, upon the return of this order to show cause on August 20, 1980, to entry of this order; now, therefore, the court having found it is fully empowered so to command the defendant, it is hereby

Ordered that, from and after this date and until 30 days after the decision in this case shall become final through the exhaustion or waiver of all rights of normal judicial review and appeal, the defendant United States shall not undertake to effect the sale or disposition, or the removal from warehouse or storage for such sale or disposition, of that certain merchandise the subject of this action which is more fully described in General Order No. 110–79 as 25x55-gallon drums of

methyl alcohol, under assertion of right or duty pursuant to the provision of 19 U.S.C. 1491 or under any other provision or principle of law which might permit recoupment of Customs duties by such sale or disposition; provided, however and hereby so

ORDERED that, within 15 days after this date, the plaintiff furnish to the defendant a cash bond in the sum of $1,600 to secure the defendant's rights under law with respect to said merchandise; and provided, further that nothing contained in this order or the consent of the defendent thereto shall be construed as a relinquishment or waiver of defendant's previously asserted position that the court lacks subject matter jurisdiction of this action, or as a waiver of any right defendant may have at law or equity to recoupment of the full amount of the lawful duties eventually found due and owing with respect to the importation of said merchandise should the lien upon said merchandise (or the above bond in lieu thereof) not result in their full recovery.

(C.R.D. 80-14)

ATLANTIC SUGAR LTD., ET AL., PLAINTIFFS *v.* THE UNITED STATES, DEFENDANT

Memorandum Opinion and Order on Intervenor Amstar's Motion for Modification and Stay of Previous Order

Court No. 80-5-00754

(Dated September 24, 1980)

WATSON, Judge: On September 12, 1980, the court entered an order granting plaintiffs access to confidential documents from the administrative record of an antidumping proceeding filed in court by the International Trade Commission. Thereafter, Intervenor Amstar Corp. moved for a partial stay of the order and for a rehearing as to the disclosure of document 25, Amstar's response to an ITC questionnaire. Amstar sought a limitation of the disclosure of document 25 to one attachment and 3 of its 15 sections, and a further stay of disclosure of other documents covered by the order until all those persons whose confidential information was contained therein had been given notice of this proceeding and an opportunity to comment.

On September 23, 1980, the court heard oral argument of the above motion. Although the broad notice advocated by Amstar would be a perfect method of insuring that all possible objections to disclosure are heard, it is not presently required by law and has no constitutional dimension. When various persons responded to the questionnaires

(from which the information subject to disclosure was evidently extracted) they were informed that the information would not be disclosed "except as required by law." The requirement of disclosure for the purpose of judicial review is such a requirement, even though it may not have been exactly foreseen at that time.

The court notes that under H.R. 7540 (the Customs Courts Act of 1980), which, as of this writing appears destined to go into effect on November 1, 1980, it will be required that interested parties be notified of the commencement of actions such as this one. However, in this old law case the court gives greater importance to the uninterrupted and expeditious continuation of this action in which issue has already been joined. Moreover, the court is of the opinion that possible harm to other persons by unauthorized disclosure will, in any event, be minimized by the adoption of a stringent protective order.

With regard to Document 25, the court is of the opinion that plaintiffs' need for it goes beyond mere curiosity or a vague groping for clues.

At this preparatory stage, to require plaintiffs to make an exact demonstration of how the contents of this document will support their attack on the administrative determinations would, in effect, require the court to make an advance judgment of the existence of substantial evidence for those determinations. Aside from demanding impossible prescience from the plaintiffs such an inquiry would result in a distorted and piecemeal judicial review.

The document contains 15 categories of information for the years 1975 through 1979, ranging from Amstar's production capacity, distribution of sales and profit and loss to its employment, wage, and price statistics. Some of the information is specifically related to the Northeast region, although most of it is stated in terms of overall operations in the United States, further divided into beet sugar and cane sugar operations. This data has an arguable relevance to the issues and it would be unreasonable to preclude its use as a basis for direct and inferential analysis.

The court adheres to its decision that plaintiffs should have access to Document 25.

For the above reasons, it is

ORDERED, that Amstar's motion for a modification of the previous order and for a further stay be denied and it is further

ORDERED, that the order of September 12, 1980, go into effect 5 days after the date of entry of this order.

Appeals to U.S. Court of Customs and Patent Appeals

Appeal 80–38.—Farrell Lines, Inc., as Successor to American Export Lines, Inc. *v.* United States.—Ship Repairs—Duty on Costs of Foreign Repairs—Remission of Duty—Timeliness of Summons—Equitable Estoppel. Appeal from C.D. 4864.

In this case plaintiff-appellant seeks a remission of duties on repairs made overseas to its vessel, the *C. V. Lightning*. The vessel ran aground as it departed New York for Europe. It anchored for damage inspection, was found to be seaworthy, and departed from New York. After another inspection at Bremerhaven, West Germany, an American Bureau of Shipping surveyor declared the vessel unseaworthy and required that repairs be made before he would authorize a return voyage. After repairs, the vessel returned to New York, and duty was assessed on the cost of the foreign repairs pursuant to section 466(a) of the Tariff Act of 1930, as amended. Plaintiff contends that the casualty suffered by the *C. V. Lightning*, in running aground, falls within the remission provision of section 466(b)(1) (redesignated as sec. 466(d) under a 1978 amendment to the Tariff Act of 1930). Defendant-appellee contends that plaintiff does not qualify for the remission of duties and, moreover, that plaintiff is not entitled to prosecute the action for remission of the foreign repair duties since it failed to comply with essential procedural requirements. Plaintiff, inter alia, maintains that defendant be estoppeled from raising any jurisdictional defenses arising from procedural defects, as defendant was instrumental in determining the procedures plaintiff should follow. The Customs Court found that equitable estoppel did not apply since plaintiff had not shown that defendant was instrumental in plaintiff's failure to meet either the statutory or regulatory requirements. The court held that the summons to contest the denial of the protest was not timely filed and granted defendant's motion to dismiss the action.

It is claimed that the Customs Court erred in holding that the plaintiff's summons in the Customs Court was not timely filed; in holding that the administrative decision of the Customs Service rendered on January 14, 1977, commenced the running of the 180-day statutory limit for filing of a summons; in holding that the defendant was not

estoppeled to raise the defense of jurisdictional defects, particularly the defense of timeliness and in finding that the duty in question was liquidated on October 24, 1975.

Appeal 80-39.—Rank Precision Industries, Inc. *v.* United States.—Television Camera Lens System—Mounted Lens—Optical Appliances and Instruments—Parts of Television Cameras—TSUS. Appeal from C.D. 4866.

In this case a Varotal 30 television camera lens system (comprised of a number of optical, electrical, and mechanical components) was classified by Customs as a mounted lens (other than projection) under item 708.2 of the Tariff Schedules of the United States, as modified by T.D. 68-9, and assessed with duty at the rate of 12.5 percent ad valorem. As an alternative classification, the Government claimed that the merchandise was encompassed by the provision in item 708.89, TSUS, as modified, for "Other (optical) appliances and instruments", for which the rate of duty is 22.5 percent. Plaintiff-appellant claimed that the merchandise was properly dutiable at the rate of 6 percent under the provision in item 685.10, TSUS, as modified, for parts of television cameras. The Customs Court found that the merchandise was classifiable under item 708.89, supra, as alternatively claimed by the Government.

It is claimed that the Customs Court erred in finding that the subject merchandise is properly classifiable under item 708.89, supra; in not finding and holding that the merchandise is properly classifiable under item 685.10, supra; in finding and holding that, as of the liquidation date herein, July 19, 1974, there was no established and uniform practice of classification of the subject merchandise under item 685.10, nor a finding made by the Secretary of the Treasury under section 315(d) of the Tariff Act of 1930; in finding and holding that the subject merchandise is an optical instrument; in not finding and holding that the subject merchandise is more than an optical appliance or instrument.

Appeal 80-40.—United States *v.* Elbe Products Corp.—Imitation Leather Used for Shoe Linings—Nonwoven Fabrics of Manmade Fibers—Flexible Strips and Sheets of Noncellulosic Plastics Materials—TSUS. Appeal from C.D. 4865.

The merchandise in this case described on the invoices as "Farrita 80" and "Plantilla 80" consists of strips or sheets made or cut into rec-

tangular pieces over 15 inches in width and over 18 inches in length. It is flexible, not of cellulosic plastics materials, manufactured principally for use as linings in footwear, and of nonwoven fibers and plastic coatings. The articles in question were classified under item 355.25, TSUS, as modified by T.D. 68–9, as nonwoven fabrics of manmade fibers, and assessed with duty at 12 cents per pound plus 15 percent ad valorem. Defendant-appellant alternatively asserted that the merchandise was properly classifiable under item 359.50, TSUS, as textile fabrics, including laminated fabrics, of manmade fibers, dutiable at 25 cents per pound plus 30 percent. Plaintiff-appellant primarily claimed that the merchandise be classified under item 771.42, TSUS, as modified by T.D. 68–9, providing for other flexible strips and sheets, of noncellulosic plastics materials, and dutiable at 6 percent ad valorem. Alternatively, plaintiff contended the merchandise should be classified (1) under item 774.60, TSUS, as modified, as other articles, not specially provided for, of plastics, dutiable at 8.5 percent; and (2) under item 359.60, TSUS, as modified, as other textile fabrics, including laminated fabrics, not specially provided for, dutiable at 8.5 percent. The Customs Court held that the merchandise was properly classifiable as claimed under item 771.42, supra.

It is claimed that the Customs Court erred in finding and holding that the merchandise is properly classifiable and dutiable under item 771.42, supra; in not finding and holding that the merchandise is properly classifiable and dutiable under item 355.25, supra; in finding and holding that the visual and tactile qualities of the merchandise in issue result in its being almost wholly of plastics, as defined in general headnote 9(f)(iii), for purposes of classification under item 771.42; in not finding and holding that general headnote 9(f)(iii) is not relevant to the classification of the merchandise in issue, and that it is not almost wholly of plastics for purposes of classification under item 771.42 even if that headnote were applicable; in finding and holding that the merchandise in issue is an article specially provided for in schedule 7 and therefore is excluded from classification in subpart C, part 4, schedule 3, TSUS, by headnote 1(vii) to that subpart; in not finding and holding that the merchandise in issue is not an article in the context of headnote 1(vii), supra; in not finding and holding that the superior heading to item 355.25, and headnotes 2(a)(iv) and 4(b) to schedule 3 require classification of the merchandise in issue under item 355.25.

Recent Unpublished Customs Service Decisions

The following listing of recent administrative decisions issued by the Office of Regulations and Rulings, U.S. Customs Service, and not otherwise published, is published for the information of Customs officers and the importing community. Although the decisions are not of sufficient general interest to warrant publication as Treasury decisions, the listing describes the issues involved and is intended to aid Customs officers and concerned members of the public in identifying matters of interest which recently have been considered by the Office of Regulations and Rulings.

A copy of any decision included in this listing, identified by its date and file number, may be obtained in a form appropriate for public distribution upon written request to the Office of Regulations and Rulings, attention: Legal Reference Area, room 2404, U.S. Customs Service, 1301 Constitution Avenue NW., Washington, D.C. 20229. These copies will be made available at a cost to the requester of 10 cents per page. However, the Customs Service will waive this charge if the total number of pages copied is 10 or less.

Decisions listed in earlier issues of the CUSTOMS BULLETIN, through July 2, 1980, are available in microfiche format at a cost of $23.85 (15 cents per sheet of fiche). It is anticipated that additions to the microfiche will be made quarterly and subscriptions are available. Requests for the microfiche now available and for subscriptions should be directed to the Legal Reference Area. Subscribers will automatically receive updates as they are issued and will be billed accordingly.

Dated: October 6, 1980.

JOHN T. ROTH,
Acting Director,
Regulations and Research Division.

Date of decision	File No.	Issue
9-12-80	104576	Carrier rulings: Application of Customs navigation, and export control laws to the island of Palmyra
9-12-80	104594	Vessels: Verification of net tonnage figures on vessel registers presented in a foreign language

Date of decision	File No.	Issue
9- 5-80	104701	Carrier control: Use of a foreign vessel to transport passengers on cruises touching at both U.S. and foreign ports
9-12-80	104742	Vessels: Use of a foreign storage vessel on the high seas in the Gulf of Mexico in the course of the transportation of Alaskan North Slope crude oil to U.S. gulf and east coast ports
9-12-80	104749	Instruments of international traffic: Bulk containers used in the transportation of powdered, flaked, or granular material
9-12-80	104792	Vessels: Customs acceptance of certain tonnage certificates for the purpose of assessing tonnage tax
9- 3-80	104841	Vessels: Whether oil arriving in the United States aboard a large vessel may be transferred to smaller vessels within territorial waters prior to Customs entry of the large vessel
9-12-80	104852	Vessels: Use of a foreign-built, foreign-flag yacht under a bareboat charter in U.S. waters under a cruising permit
8-29-80	104854	Vessels: Whether a foreign-flag salvage and towing vessel may be used to extricate and tow a U.S.-flag vessel impaled on drilling platform on Outer Continental Shelf
9-12-80	104859	Carrier control: Whether the coastwise laws prohibit the use of a noncoastwise-qualified vessel from transporting crabs from Alaska to Seattle even though the crabs will be offered for sale in Canada
8-11-80	055241	American selling price: Basketball-style shoe (700.60)
9- 8-80	055800	Generalized system of preferences: Substantially transformed constituent materials; drafting tools produced in beneficiary developing country from imported plastic, metal, and wood sheets and strips
		Court No. 80-5-00754
9- 7-80	060880	Classification: Pocket dictionary (274.85)
9- 8-80	060899	Country of origin: Yarns produced in Japan, but dyed in Canada
9- 8-80	060921	Classification: Barbeque grills; charcoal cartridges; starter fluid (475.66, 517.91, 653.52)
9- 8-80	060982	Classification: Frozen desserts (118.30)
9- 8-80	061103	Classification: Calcium cyanamide (480.15)
7-24-80	061555	American selling price: Protective boots (700.60)
6-29-80	061675	Classification: Alginic acid (493.68)
7-30-80	061724	American selling price: Woman's workshoe (700.60)
2- 5-80	061753	Classification: Whether doll on roller skates with wind-up spring mechanism is more than a doll (737.22, 737.40)
9- 7-80	061776	American selling price: Woman's open- oe, open-back sandal (700.60)

Date of decision	File No.	Issue
		Court No. 80-5-000754—Continued
9- 8-80	061851	Classification: Cotton and rayon pile material used to make valances and drapery tie-backs (346.60)
7-30-80	061854	American selling price: Child's protective boot (700.60)
9- 8-80	061940	American selling price: Child's protective boot (700.60)
9- 8-80	062395	Classification: Toy electric organ (737.60, 737.95)
9- 8-80	062566	Classification: Styrofoam bee decoration (774.55)
9- 8-80	062975	Classification: Men's shirts (380.06, 380.81)
9- 8-80	064162	Classification: Epoxy resin paint (413.50)
9- 8-80	064225	Classification: Whether Western-style shirt with double-pointed front yokes (overlaid) are ornamented (382.-04)
9- 7-80	064305	Classification: Braided strips (357.70, 774.55)
9- 8-80	064431	Classification: Lemon juice (165.30, 165.35)
8-11-80	064453	Classification: Plaster models of teeth and gums (737.15, 864.55)
9- 8-80	064456	Classification: Expansion bolt fastener (646.54, 923.51)
9- 8-80	064520	Classification: Handling and printing equipment used in making tape cassettes (662.20, 664.10, 668.23, 678.50, 710.90, 712.49)
9- 8-80	064523	Classification: Snow chain traction device for automobiles (652.24 through 652.38)
6-22-80	064571	Classification: Intrauterine copper contraceptive and inserter (657.30, 774.55)
9- 8-80	064584	Classification: Decorative article with electric lights (688.45)
9- 7-80	064592	Classification: Combination totebag-pillow with ruffled edging which does not finish off the edges where placed (386.09)
9- 7-80	064604	Classification: Concrete building forms; plywood products (207.00, 240.24, 680.13)
9- 8-80	064608	Classification: Ski carrier (389.62, 774.55)
9- 8-80	064628	Classification: Biological freezer (661.35)
9- 7-80	064659	Classification: Whether footwear upper is unfinished footwear or part of footwear (774.50)
9- 8-80	064751	American selling price: Woman's protective boot in Western style (700.60)
9- 7-80	064754	Classification: Wooden figure in glass bottle (737.22)
9- 8-80	064759	Classification: Fruitpicking bag (389.62, 666.00, 791.65)
9- 7-80	064789	Classification: Railway protection plate (657.10, 690.35)
9- 7-80	064832	Classification: Perfume sachet (256.90, 799.00)
8-29-80	064804	Classification: Men's vinyl sandal (700.58)
9- 7-80	064819	Classification: Nonwoven textile cloths (355.25, 774.55)
9- 7-80	064852	Classification: Blankets (363.25, 363.85)
9- 7-80	064858	Classification: Combination radio-megaphone (685.24)
9- 8-80	064876	Classification: Wood preservative (405.15, 408.38)
9- 7-80	064891	Classification: Woman's crotcheted pullover with open-work and designs (382.00)

Date of decision	File No.	Issue
		Court No. 80-5-000754—Continued
7-30-80	064916	Classification: Hand puppets (737.25, 737.30, 737.40)
9- 8-80	064938	Classification: Slaughterhouse conveyor system components (657.25, 664.10)
8-29-80	064960	Classification: Flexible packaging material (644.38)
8-11-80	064991	Classification: Sow cages and feeders (666.00)
9- 7-80	065050	Classification: Whether a garment is designed for rainwear; cup test
7-11-80	065096	Classification: Security van roll-off containers (640.30, 657.25, 692.20)
9- 8-80	065103	Classification: Whether warp knit fabric with stable open meshes uniformly spaced is a net fabric (382.00, 382.06)
9- 8-80	065105	Classification: Whether miniature racing cars are models (737.15, 737.95)
7-24-80	065114	Classification: Wire cage pallets (640.30, 657.25)
9- 8-80	065143	Classification: Cookware and kitchen tool combinations (650.49, 650.56, 650.57, 651.75, 653.94)
9- 8-80	065197	Classification: Whether an additional piece of overlaid fabric on denim jean pocket is ornamental
9- 7-80	065239	Classification: Whether manufacturer's label on bottle bag is ornamental (386.04, 386.50)
9- 7-80	065248	American selling price: Women's canvas casual footwear (700.60
9- 7-80	065251	Classification: Plastic spray hose reinforced with synthetic fiber (771.55, 772.65)
8-29-80	065290	Classification: Herbal medicine in pill form (440.00)
9- 7-80	065300	American selling price: Protective boots (700.60)
8-29-80	065303	Classification: Women's espadrilles (700.60, 700.70)
8-11-80	065330	Classification: Air fern (190.57, 748.32)
9- 8-80	065342	Classification: Elbow pipefitting for toilet (613.18, 654.03)
9- 8-80	066001	Classification: Whether leather patches on the seat of sailing trousers are ornamental
8-29-80	066010	Classification: Knitted textile shopping bag (389.40, 772.20)
9- 8-80	066014	Classification: Keychains with either ballpoint pen or scissors attached (650.87, 740.30, 740.38, 760.05)
9- 7-80	066037	Classification: Word games (734.15, 735.20, 851.15)
9- 8-80	066067	Classification: Educational toy (737.95)
9- 7-80	066078	Classification: Chloramphenicol sodium succinate parenteral vials (407.85, 411.74, 411.76)
9- 7-80	066114	Classification: Marking pens (760.05, 760.15)
9- 7-80	066117	Classification: Resin-impregnated fabric used in batteries (338.30, 355.82)
9- 8-80	066121	Classification: Crowd control barriers (657.25)
9- 7-80	066131	Classification: Metal bending machines (674.35)
9- 8-80	066148	Classification: Cheese (117.15, 117.20, 117.25, 117.88)

Date of decision	File No.	Issue
		Court No. 80-5-000754—Continued
9- 7-80	066173	Classification: Ink (474.20, 474.26)
8-29-80	066171	Classification: Wax candles (755.25)
9- 8-80	066180	Classification: Statica Tartartica (748.25)
9- 7-80	066192	Classification: Whether a boot is welt footwear (700.25 through 700.29, 700.35, 700.45)
9- 7-80	066243	Classification: Pocketknives with stainless steel handles (649.81)
9- 8-80	066226	Classification: Whether extruded styrene sheets, a material for use in the manufacture of automobile parts, are excluded from the meaning of fabricated components under the Automotive Products Trade Act (APTA) (774.55)
9- 7-80	066303	Classification: Rotary windrowers (666.00)
9- 7-80	066322	Classification: Horse blankets (386.50, 389.62, 388.40)
9- 7-80	066346	Classification: Construction accessories used for spacing rebars in reinforced concrete construction (774.55)
9- 8-80	066369	Classification: Wood carvings (207.00)
9- 7-80	066386	Classification: Drainage filter material (347.65)
9- 7-80	066498	Classification: Wearing apparel; whether labels with logo are ornamental

International Trade Commission Notices

Investigations by the U.S. International Trade Commission

DEPARTMENT OF THE TREASURY

The appended notices relating to investigations by the U.S. International Trade Commission are published for the information of Customs officers and others concerned.

R. E. CHASEN,
Commissioner of Customs.

(AA1921-66A)

TELEVISION RECEIVING SETS FROM JAPAN

Notice of Prehearing Conference

AGENCY: U.S. International Trade Commission.

ACTION: Announcement of prehearing conference to be held in connection with the Commission's investigation No. AA1921-66A, Television Receiving Sets from Japan. The prehearing conference is to be held at 10 a.m., e.s.t., on October 31, 1980, at the U.S. International Trade Commission Building, 701 E Street NW., Washington, D.C.

EFFECTIVE DATE: September 26, 1980.

FOR FURTHER INFORMATION CONTACT: Daniel Leahy, Senior Investigator, 202-523-1369.

SUPPLEMENTARY INFORMATION:

BACKGROUND

On September 16, 1980, the Commission instituted investigation No. AA1921-66A, under section 751 of the Trade Act of 1930. The purpose of this investigation is to determine whether changed circumstances exist which indicate that an industry in the United States would not be threatened with material injury if the dumping order

now in effect concerning television receiving sets from Japan were revoked. The purpose of the prehearing conference is to discuss with interested parties the allocation of hearing time and hearing procedures.

By order of the chairman.

Issued: September 26, 1980.

KENNETH R. MASON,
Secretary.

In the Matter of CERTAIN ROTATABLE PHOTOGRAPH AND CARD DISPLAY UNITS AND COMPONENTS THEREOF	Investigation No. 337–TA–74

Notice of Commission Request for Comments Concerning Settlement Agreements

AGENCY: U.S. International Trade Commission.

ACTION: Request for public comment on proposed settlement agreements.

SUMMARY: These two proposed settlement agreements would result in termination of this investigation with respect to the two respondents covered by the agreements. This notice requests comments on the agreements, within 30 days.

DATES: Comments will be considered if received within 30 days of this notice. Comments should conform with Commission rule 201.8 (19 CFR 201.8) and should be addressed to Kenneth R. Mason, Secretary, U.S. International Trade Commission, 701 E Street NW., Washington, D.C. 20436.

FOR FURTHER INFORMATION CONTACT: William W. Gearhart, Jr., Office of the General Counsel, U.S. International Trade Commission, 701 E Street NW., Washington, D.C. 20436; telephone 202–523–0487.

SUPPLEMENTARY INFORMATION: In connection with the Commission's investigation under section 337 of the Tariff Act of 1930 (19 U.S.C. 1337) of alleged unfair methods of competition and unfair acts in the importation or sale of certain rotatable photograph and card display units in the United States, the complainants, the Commission investigative attorney, and two respondents, American Consumer, Inc., and Dan-Dee Imports, Inc., moved on June 10, 1980 (motion Nos. 74–8 and 74–9), to terminate this investigation as to those two respondents based upon settlement agreements. On July 11,

1980, the administrative law judge recommended that the Commission grant the motions.

Subsequently, on August 5, 1980, the administrative law judge filed a recommended determination with respect to the remaining parties in the investigation and recommended that the Commission find a violation of section 337. A hearing with respect to that recommended determination and the issues of relief, public interest considerations, and bonding is scheduled to be held before the Commission beginning at 10 a.m., October 17, 1980, in the Commission's hearing room, 701 E Street NW., Washington, D.C.

Notice of the institution of this investigation was published in the Federal Register of November 21, 1979 (44 F.R. 66997). Notice of the October 17 hearing was published in the Federal Register of October 1, 1980 (45 F.R. ——).

Written comments requested.—In view of the Commission's duty to consider the public interest, the Commission requests written comments from interested persons and agencies concerning the effect of the termination of this investigation based upon the settlement agreements upon (1) the public health and welfare, (2) competitive conditions in the U.S. economy, (3) the production of like or directly competitive articles in the United States, and (4) U.S. consumers. These written comments must be filed with the Secretary to the Commission no later than 30 days after publication of this notice in the Federal Register.

The agreements.—The two settlement agreements are virtually identical. Both respondents agree not to import a rotary photo display device like or similar to the ones being marketed by complainants. The settlement agreements are available for inspection during official working hours (8:45 a.m. to 5:15 p.m.) in the office of the Secretary to the Commission.

Additional information.—The original and 19 true copies of all written submissions must be filed with the Secretary to the Commission. Any persons desiring to submit a document (or portion thereof) to the Commission in confidence must request in camera treatment. Such request should be directed to the Secretary and must include a full statement of the reasons why the Commission should grant such treatment. The Commission will either accept such submission in confidence or return it. All nonconfidential written submissions will be open to public inspection at the Secretary's office.

By order of the Commission.

Issued: September 29, 1980.

KENNETH R. MASON,
Secretary.

System of Records for Grievance Records

AGENCY: U.S. International Trade Commission.

ACTION: Publication of system of records for grievance records under the Privacy Act of 1974.

SUMMARY: This system contains records relating to grievances filed by agency employees under part 771 of regulations issued by the Office of Personnel Management (OPM). The case files contain all documents related to the grievance, including statements of witnesses, reports of interviews and hearings, examiner's findings and recommendations, a copy of the original and final decision, and related correspondence and exhibits. The system includes files and records of internal grievance and arbitration systems established through negotiations with recognized labor organizations. Records are to be maintained in the Commission's personnel division.

EFFECTIVE DATE: September 30, 1980.

FOR FURTHER INFORMATION CONTACT: William W. Gearhart, Jr., Office of General Counsel, U.S. International Trade Commission, Washington, D.C. 20436; telephone 202-523-0487.

SUPPLEMENTARY INFORMATION: The Commission has been advised by the Office of Management and Budget that the OPM plans to delete, effective September 30, 1980, the Government-wide system "OPM/GOVT-2. Grievance Records" because it has been decided that such records would be more appropriately maintained in individual agency systems of records.

The information called for in the Commission system set forth below duplicates the information called for in the OPM system. Thus the proposed Commission system is not a new system of records, and no report thereon is necessary. The OPM system was published in the Federal Register of May 29, 1979 (44 F.R. 30884), and was amended by a notice published in the Federal Register of October 26, 1979 (44 F.R. 61708).

The authority for maintaining this system of records is set forth in 5 U.S.C. 1302, 3301, and 3302; Executive Order 10577; and Executive Order 10987.

The system of records for grievance records is as follows—

System name

Grievance records—USITC.

System location

The records are located in the Division of Personnel of the U.S. International Trade Commission.

Categories of individuals covered by the system

Current or former employees of the U.S. International Trade Commission (agency) who have submitted grievances in accordance with part 771 of the regulations of the Office of Personnel Management (5 CFR 771) or through a negotiated grievance procedure.

Categories of records in the system

The system contains records relating to grievances filed by agency employees under part 771 of regulations issued by the Office of Personnel Management. The case files contain all documents related to the grievance, including statements of witnesses, reports of interviews and hearings, examiner's findings and recommendations, a copy of the original and final decisions, and related correspondence and exhibits. The system includes files and records of internal grievance and arbitration systems established through negotiations with recognized labor organizations.

Authority for maintenance of the system

5 U.S.C. 1302, 3301, 3302, Executive Order 10577, 3 CFR 1954–1958 Comp., page 218, Executive Order 10987, 3 CFR 1959–1963 Comp., page 519, agency employees, for personal relief in a matter of concern or dissatisfaction which is subject to the control of agency management.

Routine uses of records maintained in the system, including categories of users and purposes of such uses

These records and information in these records may be used:

a. To disclose pertinent information to the appropriate Federal, state, or local agency responsible for investigating, prosecuting, enforcing, or implementing a statute, rule, regulation, or order, where the agency becomes aware of an indication of a violation or potential violation of civil or criminal law or regulation.

b. To disclose information to any source from which additional information is requested in the course of processing a grievance, to the extent necessary to identify the individual, inform the source of the purpose(s) of the request, and identify the type of information requested.

c. To disclose information to a Federal agency, in response to its request, in connection with the hiring or retention of an employee, the issuance of a security clearance, the conducting of a security or suitability investigation of an individual, the classifying of jobs, the letting of a contract, or the issuance of a license, grant, or other benefit by the requesting agency, to the extent that the information is relevant and necessary to the requesting agency's decision on the matter.

d. To provide information to a congressional office from the record of an individual in response to an inquiry from that congressional office made at the request of that individual.

e. To disclose information to another Federal agency or to a court when the Government is party to a judicial proceeding before the court.

f. By the National Archives and Records Service (General Services Administration) in records management inspections conducted under the authority of 44 U.S.C. 2904 and 2906.

g. By the Commission or by the Office of Personnel Management in the production of summary descriptive statistics and analytical studies in support of the function for which the records are collected and maintained, or for related work force studies. While published statistics and studies do not contain individual identifiers, in some instances the selection of elements of data included in the study may be structured in such a way as to make the data individually identifiable by inference.

h. To disclose information to officials of the Merit Systems Protection Board, including the Office of the Special Counsel; the Federal Labor Relations Authority and its General Counsel, or the Equal Employment Opportunity Commission when requested in performance of their authorized duties.

i. To disclose in response to a request for discovery or for appearance of a witness, information that is relevant to the subject matter involved in a pending judicial or administrative proceeding.

j. To provide information to officials of labor organizations reorganized under the Civil Service Reform Act when relevant and necessary to their duties of exclusive representation concerning personnel policies, and matters affecting work conditions.

Policies and practices for storing, retrieving, accessing, retaining, and disposing of records for the systems

Storage.—These records are maintained in file folders.

Retrievability.—These records are retrieved by the names of the individuals on whom they are maintained.

Safeguards.—These records are maintained in lockable metal filing cabinets to which only authorized personnel have access.

Retention and disposal.—These records are disposed of 3 years after closing of the case. Disposal is by shredding or burning.

System manager and address

Director, Division of Personnel, U.S. International Trade Commission, 701 E Street NW., Washington, D.C. 20436.

Modification procedures

It is required that individuals submitting grievances be provided a copy of the record under the grievance process. They may, however, contact the agency personnel or designated office where the action was processed regarding the existence of such records on them. They must furnish the following information for their records to be located and identified:

a. Name.
b. Date of birth.
c. Approximate date of closing the case and kind of action taken.
d. Organizational component involved.

Records access procedures

It is required that individuals submitting grievances be provided a copy of the record under the grievance process. However, after the action has been closed, an individual may request access to the official copy of the grievance file by contacting the agency personnel office.

Individuals must provide the following information for their records to be located and identified:

a. Name.
b. Date of birth.
c. Approximate date of closing of the case and kind of action taken.
d. Organizational component involved.

Individuals requesting access must also follow the Privacy Act regulations of the Office of Personnel Management regarding access to records and verification of identity (5 CFR 297.203 or 297.201).

Contesting record procedures

Review of requests from individuals seeking amendment of their records which have been the subject of a judicial or quasi-judicial action will be limited in scope. Review of amendment requests of these records will be restricted to determining if the record accurately documents the action of the agency ruling on the case, and will not include a review of the merits of the action, determination, or finding.

Individuals wishing to request amendment to their records to correct factual errors should contact the agency personnel office. Individuals must furnish the following information for their records to be located and identified:

a. Name.
b. Date of birth.
c. Approximate date of closing the case and kind of action taken.
d. Organizational component involved.

Individuals requesting amendment must also follow the Privacy Act regulations of the Office of Personnel Management regarding amendment to the records and verification of identity (5 CFR 297.208 and 297.201).

Record source categories

Information in this system of records is provided:

a. By the individual on whom the record is provided.
b. By testimony of witnesses.
c. By agency officials.
d. From related correspondence from organizations or persons.

By order of the Commission.

Issued: September 29, 1980.

KENNETH R. MASON,
Secretary.

In the Matter of CERTAIN INCLINED-FIELD ACCELERATION TUBES AND COMPONENTS THEREOF	Investigation No. 337-TA-67

Commission Hearing on the Presiding Officer's Recommendation and on Relief, Bonding and the Public Interest, and the Schedule for Filing Written Submissions

AGENCY: U.S. International Trade Commission.

ACTION: Change in scheduling of oral argument and briefing for investigation No. 337-TA-67, Certain Inclined-Field Acceleration Tubes and Components Thereof.

SUMMARY: Notice is hereby given that the Commission hearing in the above-captioned case, which was announced at 45 F.R. 63389 (Sept. 24, 1980) and was previously scheduled for October 30, 1980, has been changed. The hearing will begin at 10 a.m., e.s.t., on November 25, 1980, in the Commission's hearing room, 701 E Street NW., Washington, D.C. 20436.

HEARING TIME LIMITS: Parties and agencies wishing to make oral argument with respect to the recommended determination shall be limited in each oral argument to not more than 30 minutes. A party or interested agency may reserve 10 minutes of its time for rebuttal. Oral arguments will be held in this order: complainant, respondent, interested agencies, and the Commission investigative attorney. Rebuttals will be in this order: respondent, complainant, interested agencies, and the Commission investigative attorney.

For that part of the hearing devoted to relief, bonding, and the public interest, parties, interested persons, and Government agencies will be limited in their presentations to no more than 15 minutes. Participants will be permitted an additional 5 minutes for closing arguments after all presentations have been concluded. The Commission investigative attorney will be allotted the full time available to a party. Oral presentations on relief, bonding, and the public interest will be held in the same order as arguments on the recommended determination.

NOTICE OF APPEARANCE: Requests for appearances at the hearing should be filed, in writing, with the Secretary to the Commission at his office in Washington no later than the close of business on October 31, 1980. Requests should indicate the part of the hearing (i.e., with respect to the recommended determination, relief, bonding, the public-interest factors, or any combination thereof) in which the requesting person desires to participate.

WRITTEN SUBMISSIONS: Briefs on the issues of violation (to the extent that they have not already briefed that issue in connection with exceptions to the presiding officer's recommended determination), remedy, bonding and the public interest must be filed no later than the close of business on October 31, 1980.

FOR FURTHER INFORMATION CONTACT: Michael B. Jennison, Office of the General Counsel, U.S. International Trade Commission; telephone 202-523-0189.

By order of the Commission.

Issued: October 1, 1980.

KENNETH R. MASON,
Secretary.

In the Matter of CERTAIN STEEL JACKS FROM CANADA	Investigation No. 603-TA-6

Notice of Commission Request for Comments Concerning Proposed Consent Order

AGENCY: U.S. International Trade Commission.

ACTION: Request for public comment on proposed consent order.

SUMMARY: The consent order would result in termination of this investigation and imposition of certain requirements on the parties involved. This notice requests comments on the proposed consent order, within 30 days.

DATES: Comments will be considered if received within 30 days of this notice. Comments should conform with Commission rule 201.8 (19 CFR 201.8) and should be addressed to Kenneth R. Mason, Secretary, U.S. International Trade Commission, 701 E Street NW., Washington, D.C. 20436.

FOR FURTHER INFORMATION CONTACT: Carol McCue Verratti, Office of the General Counsel, U.S. International Trade Commission, 701 E Street NW., Washington, D.C. 20436; telephone 202-523-0124.

SUPPLEMENTARY INFORMATION: In connection with a complaint filed under section 337 of the Tariff Act of 1930 (19 U.S.C. 1337) and a preliminary investigation by the Commission under section 603 of the Trade Act of 1974 (19 U.S.C. 2482) of alleged unfair acts and methods of competition in the importation and sale in the United States of steel jacks, the complainant: Bloomfield Manufacturing Co., the Commission investigative attorney, and three companies named in the complaint as respondents, J. C. Hallman Manufacturing Co., American Gage and Manufacturing Co., and A. H. Bottorff Co., have entered into a consent order agreement. It is proposed that the Commission accept the consent order agreement and issue a consent order incorporating its terms.

Notice of institution of the preliminary investigation was published in the Federal Register of May 1, 1980 (45 F.R. 29141). Notice of the Commission's vote to extend the preliminary investigation was published in the Federal Register of July 9, 1980 (45 F.R. 46262).

Written comments requested.—In view of the Commission's duty to consider the public interest, the Commission requests written comments from interested persons and agencies concerning the effect of the proposed consent order upon (1) the public health and welfare, (2) competitive conditions in the U.S. economy, (3) the production of like or directly competitive articles in the United States, and (4) U.S. consumers. These written comments must be filed with the Secretary to the Commission no later than 30 days after publication of this notice in the Federal Register.

The proposed consent order.—The proposed consent order is appended to this notice and is being published simultaneously. In conformity with the consent order agreement, the proposed consent order directs Bloomfield Manufacturing Co., and American Gage and Manufacturing Co., to label jacks sold by those firms to reflect that such jacks are assembled in the United States from component parts, the majority of which are of foreign manufacture. This requirement must be complied with as long as a substantial percentage of the component parts used in such jacks are manufactured elsewhere than the United

States. The order further requires American Gage and Manufacturing Co., and A. H. Bottorff Co., to cease using the phrase "malleable cast jack" or "cast jack" in their sales or pricing literature or otherwise to describe jacks having components, some of which are made with steel stampings. American Gage and Manufacturing Co., is directed not to refer in its sales or pricing literature or otherwise to a shear pin safety device unless such a device is actually used in its jacks. The proposed order additionally directs J. C. Hallman Manufacturing Co., and American Gage and Manufacturing Co., to cease providing each other with cost information or suggestions and information relating to the pricing of jacks. The proposed consent order provides that the Commission reserves the right to require the named firms to file affidavits showing compliance with the consent order. The Commission also is to be permitted to examine business records and documents of the named firms or to interview appropriate representatives and employees of the named firms if reasonable grounds exist to believe that a violation of the consent order has occurred.

Additional information.—The original and 19 true copies of all written submissions must be filed with the Secretary to the Commission. Any persons desiring to submit a document (or portion thereof) to the Commission in confidence must request in camera treatment. Such request should be directed to the Secretary and must include a full statement of the reasons why the Commission should grant such treatment. The Commission will either accept such submission in confidence or return it. All nonconfidential written submissions will be open to public inspection at the Secretary's office.

By order of the Commission.

Issued: October 1, 1980.

KENNETH R. MASON,
Secretary.

In the Matter of CERTAIN STEEL JACKS FROM CANADA	Preliminary Investigation No. 603-TA-6

Consent Order

It is ordered, in conformity with the consent order agreement executed by Bloomfield Manufacturing Co. (Bloomfield), drawer 228, Bloomfield, Ind. 47424; J. C. Hallman Manufacturing Co., Ltd. (Hallman), 80 Alpine Road, Kitchener, Ontario, Canada; American Gage and Manufacturing Co. (Gage), 550 West Linfoot Street, Wauseon, Ohio 43567; A. H. Bottorff Co. (Bottorff), 4002 McCarthy Road, St. Joseph, Mo. 64503; and the U.S. International Trade Commission investigative attorney, that—

I

Bloomfield shall label jacks sold by it "Assembled in U.S.A. from Portuguese (or other foreign) Component Parts," or words to similar effect, so long as such jacks comprise a substantial percentage of Portuguese (or other foreign) component parts.

II

Hallman shall not directly or indirectly: (1) suggest to Gage how Gage should price private brand label jacks; nor (2) reveal to Gage prices at which Hallman sells jacks to specific customers. Hallman shall sell jacks to Bottorff as long as Bottorff is able to keep its accounts with Hallman reasonably current in accordance with accepted practice in the industry. Hallman shall not discuss pricing of jacks with Bloomfield.

III

Gage shall: (1) not refer in its sales or pricing literature or otherwise to a shear pin safety feature in reference to its jacks, unless such a device is actually incorporated into such jacks; (2) not use the phrase "malleable cast jack" or "cast jack" in its sales or pricing literature or otherwise to describe jacks comprising components (except the rail, the handle, and the hardware), some of which are made with steel stampings; and (3) label jacks sold by it "Assembled in U.S.A. from Canadian (or other foreign) Component Parts," or words of similar effect, as long as such jacks comprise a substantial percentage of Canadian (or other foreign) component parts.

Gage shall not directly or indirectly provide Hallman with: (1) information relating to prices at which Gage sells or proposes to sell jacks to specific customers, or (2) information concerning any of Gage's costs, except for such costs of which Hallman would be aware by virtue of Hallman's supplying of component parts to Gage.

IV

Bottorff shall not use the phrases "malleable cast jack" or "cast jack" in its sales or pricing literature or otherwise to describe jacks comprising components (except the rail, the handle, and the hardware), some of which are made with steel stampings.

V

The Commission reserves the right to require the firms named herein to file affidavits executed by their respective duly authorized officers containing statements evidencing compliance with this consent

order if for any reason it shall be determined by the Commission that reasonable grounds exist to believe that Bloomfield, Hallman, Gage, or Bottorff is in violation of the provisions of this consent order.

VI

If for any reason, including the contents of the affidavits which may be required by the paragraph above, it shall be determined by the Commission that reasonable grounds exist to believe that Bloomfield, Hallman, Gage, or Bottorff is in violation of the provisions of this consent order, duly authorized representatives of the Commission shall, upon reasonable notice, at reasonable times, be permitted access to such books, ledgers, accounts, correspondence, and other records and documents in the possession or under the control of the firms named herein as are reasonably necessary to verify any matter relating to parts I through IV above. Duly authorized representatives of the Commission shall also be permitted to interview appropriate representatives and employees of the firms named herein upon reasonable notice to such firms. Such representatives and employees may have counsel present at any such interviews.

VII

The Commission may, at its discretion, without notice to Bloomfield, Hallman, Gage, or Bottorff, issue this consent order and may make public any nonconfidential information relating to this investigation.

In the Matter of CERTAIN AIRTIGHT CAST-IRON STOVES	Investigation No. 337–TA–69

Commission Hearing on the Presiding Officer's Recommendation and on Relief, Bonding and the Public Interest

AGENCY: U.S. International Trade Commission.

ACTION: The scheduling of oral argument and briefing for investigation No. 337–TA–69, Certain Airtight Cast-Iron Stoves.

Notice is hereby given that the presiding officer has filed her recommended determination that there is a violation of section 337 of the Tariff Act of 1930 (19 U.S.C. 1337) in the unauthorized importation into and sale in the United States of certain airtight cast-iron stoves. She has also certified the evidentiary record to the Commission for its consideration. Interested persons may obtain copies of the nonconfidential version of the presiding officer's recommendation (and

all other public documents) by contacting the Office of the Secretary to the Commission, 701 E Street NW., Washington, D.C. 20436.

COMMISSION HEARING: The Commission will hold a hearing beginning at 10 a.m., e.s.t., on November 3, 1980, in the Commission's hearing room (room 331), 701 E Street NW., Washington, D.C. 20436, for two purposes. First the Commission will hear oral argument on the presiding officer's recommendation that a violation of section 337 of the Tariff Act of 1930 exists. Second, the Commission will hear presentations concerning appropriate relief, the way such relief would affect the public interest, and the proper amount of the bond during the Presidential review period, in the event that the Commission determines that there is a violation of section 337. These matters will be heard on the same day in order to facilitate the completion of this investigation within time limits established under law and to minimize the burden of this hearing upon the parties. The procedure for each portion of the hearing follows.

ORAL ARGUMENT: A party to the Commission's investigation or an interested agency wishing to present to the Commission an oral argument concerning the presiding officer's recommendation will be limited to no more than 30 minutes. A party or interested agency may reserve 10 minutes of its time for rebuttal. The oral arguments will be held in this order: complainant, respondents, interested agencies, and the Commission investigative attorney. Any rebuttals will be held in this order: respondents, complainant, interested agencies, and the Commission investigative attorney.

ORAL PRESENTATIONS ON RELIEF, BONDING, AND THE PUBLIC INTEREST: If the Commission finds that a violation of section 337 has occurred, it may issue (1) an order which could result in the exclusion from entry of the subject article or (2) an order which could result in requiring the respondent to cease and desist from alleged unfair methods of competition or unfair acts in the importation and sale of such articles. Accordingly, the Commission is interested in what relief, if any, should be ordered.

If the Commission finds that a violation of section 337 has occurred and orders some form of relief, the President has up to 60 days to approve or disapprove the Commission's action. During this period the subject articles would be entitled to enter the United States under a bond determined by the Commission and prescribed by the Secretary of the Treasury. Accordingly, the Commission is interested in what bond, if any, should be assessed.

If the Commission concludes that a violation of section 337 has occurred and orders some form of relief, it must consider the effect of that relief upon the public. Accordingly, the Commission is in-

terested in the effect of any exclusion or cease and desist order upon (1) the public health and welfare, (2) competitive conditions in the U.S. economy, (3) the production of like or directly competitive articles in the United States, and (4) U.S. consumers.

Following the oral arguments on the presiding officer's recommendation, a party to the investigation, an interested agency, a public-interest group, or any interested member of the public may make an oral presentation on relief, bonding, and the public interest. Such presentations will be limited to no more than 15 minutes. Participants will be permitted an additional 5 minutes for closing arguments after all presentations have been concluded. The Commission investigative attorney will be allotted the full time available to a party.

WRITTEN SUBMISSIONS: Parties to the Commission's investigation, interested agencies, and the Commission investigative attorney may file briefs on the issues of violation (to the extent they have not already briefed those issues), remedy, bonding and public interest in order to give greater focus to the hearing. Such briefs must be filed no later than the close of business October 24, 1980. The parties may be asked during the course of the hearing to file posthearing briefs.

NOTICE OF APPEARANCE: Written requests to appear at the Commission hearing must be filed by October 24, 1980.

ADDITIONAL INFORMATION: The original and 19 true copies of all briefs and written comments and any written request to participate must be filed with the Secretary to the Commission. Any person desiring to discuss confidential information, or to submit a document (or a portion thereof) to the Commission in confidence, must request in camera treatment unless the information has already been granted in camera treatment by the presiding officer. Such request should be directed to the Chairman of the Commission and must include a full statement of the reasons why the Commission should grant such treatment. Documents or arguments reflecting confidential information approved by the Commission for in camera treatment will be treated accordingly. All nonconfidential written submissions will be available for public inspection at the Secretary's office.

Notice of the Commission's investigation was published in the Federal Register of July 12, 1979 (44 F.R. 40732).

FOR FURTHER INFORMATION CONTACT: Jeffrey S. Neeley, Office of the General Counsel, U.S. International Trade Commission; telephone 202–523–0359.

By order of the Commission.

Issued: October 1, 1980.

KENNETH R. MASON,
Secretary.

(337–TA–80)

Certain Plastic Bouquet Holders

Notice of Proposed Consent Order and Request for Public Comment

AGENCY: U.S. International Trade Commission.

ACTION: Notice is hereby given that the presiding officer in the above-captioned investigation has certified to the Commission for action a joint motion to terminate the investigation signed by all parties, along with a proposed consent agreement signed by all parties. Before taking final action on the proposed consent order, the Commission requests that interested members of the public submit written comments regarding the proposed consent order. Such comments should be addressed to the Secretary, U.S. International Trade Commission, 701 E Street NW., Washington, D.C. 20436, and should reference investigation No. 337–TA–80. Comments must be received not later than 30 days after the date of publication of this notice in the Federal Register. The Commission will consider requests for oral argument or oral presentation on this matter if such requests are received in the Office of the Secretary not later than 30 days after the date of the publication of this notice in the Federal Register.

EFFECTIVE DATE: Date of publication of the Federal Register.

FOR FURTHER INFORMATION CONTACT: Jack Simmons, Staff Attorney, Office of the General Counsel; 202–523–0493.

SUPPLEMENTARY INFORMATION:

BACKGROUND

A complaint was filed with the U.S. International Trade Commission on January 18, 1980, and amended on February 7, 1980, under section 337 of the Tariff Act of 1930, as amended (19 U.S.C. 1337), on behalf of Lomey Manufacturing Corp., 301 Suburban Avenue, Deer Park, N.Y. 11729, alleging that unfair methods of competition and unfair acts exist in the importation into the United States of certain plastic bouquet holders, or in their sale, because such plastic bouquet holders are allegedly covered by claims 1 through 4 of U.S. Letters Patent No. 3,576,699. The complaint alleged that the effect or tendency of the unfair methods of competition and unfair acts is to destroy or substantially injure an industry, efficiently and economically operated, in the United States. Complainant requested that, after a full investigation had been conducted, the Commission order exclusion of the imports in question and order such other and further relief as it may deem appropriate.

On April 30, 1980, pursuant to section 210.51 of the Commission's Rules of Practice and Procedure (19 CFR 210.51) all parties to the investigation jointly moved for an order to terminate. The joint motion to terminate was accompanied by a proposed consent order agreement duly entered into by the complainant and the respondents.

On May 19, 1980, the presiding officer determined and recommended, pursuant to rules 210.51(a) and 210.53(a) of the Commission's Rules of Practice and Procedure (19 CFR 210.51(a) and 210.53(a)) that the investigation should be terminated. In conformity with recent Commission practice, the recommended determination made no finding as to whether there is a present violation of section 337 of the Tariff Act of 1930, as amended (19 U.S.C. 1337), in the importation into the United States and the sale of certain plastic bouquet holders, by reason of the alleged coverage of such articles by claims 1 through 4 of U.S. Letters Patent No. 3,576,699, that allegedly have the effect or tendency to destroy or to injure substantially an industry efficiently and economically operated in the United States.

Thereafter, on July 21, 1980, counsel for the complainant submitted a letter to the Commission, whose operative language acquiesces in the disposal by respondents of their remaining inventory, which is represented to approximate not more than a few hundred dozen units. The Commission, on its own motion, has amended the proposed consent order agreement by the inclusion of a new paragraph 9 dealing with inventories. The language of that amendment is identical to the operative language in the letter of July 21, 1980.

On September 9, 1980, all parties to the investigation jointly moved to amend paragraph 5 of the proposed consent order agreement. The Commission has approved the amendment.

The proposed consent order.—The proposed consent order is appended to this notice and is being published simultaneously. The proposed consent order as published reflects the amendments made by the Commission to the original proposed consent order. Under the agreement, the respondents are to cease importing into the U.S. plastic bouquet holders of a type alleged to infringe the patent. None of the parties to the agreement makes any admission as to the issues of validity, enforceability, or infringement of the patent by the imported articles, nor any admissions regarding injury to a domestic industry. The parties submit to Commission jurisdiction and agree that the Commission may take appropriate action, including civil fines and exclusion orders, to enforce the consent order.

Request for oral arguments and oral presentation.—At present, no oral argument or oral presentation is planned with respect to the public interest factors which may be present in this case. Nevertheless, the Commission will consider requests for oral argument or oral

presentation if they are received by the Secretary no later than 30 days after the date of publication of this notice in the Federal Register.

Written submissions on the recommended determination.—Written submissions from the parties, other interested persons, Government agencies and departments, or the public, with respect to the public interest will be considered by the Commission if received on or before 30 days from the date of the publication of the present notice.

An original and 19 copies of all submissions must be filed with the Secretary. Any person desiring to submit a document (or a portion thereof) to the Commission in confidence, must request in camera treatment. Such request should be directed to the Secretary of the Commission and must include a full statement of the reasons the Commission should grant such treatment. The Commission will either accept such submission in confidence or return the submission.

All nonconfidential written submissions will be open for public inspection at the Office of the Secretary during regular business hours.

By order of the Commission.

Issued: October 2, 1980.

KENNETH R. MASON,
Secretary.

CONSENT ORDER AGREEMENT

The parties to this consent order agreement are the complainant, Lomey Manufacturing Corp., and respondents Sal Spitz Company, Inc., and International Artware Corp. (hereinafter respondents).[1] On the basis of the complaint filed with the U.S. International Trade Commission on January 18, 1980, by Lomey Manufacturing Corp. (hereinafter Lomey), respondents are willing to enter into a consent order agreement as follows:

1. For the purposes of this consent order agreement and the enforcement hereof, and only for such purposes, respondents appear voluntarily and admit to the personal and subject matter jurisdiction of the Commission. This consent order agreement is for settlement purposes only and does not constitute a finding by the Commission or an admission by respondents that section 337 of the Tariff Act of 1930 (19 U.S.C. 1337) or any other statute or any regulation has been violated. Respondents deny each and all of the violations alleged in the Lomey complaint and deny any and all liability for such alleged violations.

2. Respondents waive (1) all further procedural requirements, including the requirement that the Commission make a determination under section 337(c) of the Tariff Act of 1930 as a condition to entry

[1] International Artware was named as a respondent by the Commission.

of this order, (2) judicial review of this consent order agreement as entered, (3) the requirement that the Commission's decision on entry of this order embody findings of fact and conclusions of law, and (4) any other challenge or contest to the validity or enforceability of this consent order agreement entered.

3. Respondents agree that, if this consent order agreement is accepted by the Commission, the Commission may at its discretion, without further notice to respondents, issue its decision containing this consent order agreement and may make public any information relating to this investigation to the extent that such information is not subject to any valid and subsisting protective order entered by by the Commission.

4. As of February 1, 1980, and thereafter, respondents consent and agree that they shall not and will not import or cause to be imported into the United States plastic bouquet holders covered by claims 1–4 of U.S. Letters Patent No. 3,576,699, and of the kind identified in the Lomey complaint, unless and until this consent order agreement shall be suspended or terminated.

5. The Commission reserves the right to require such additional information from respondents as may reasonably be required to ascertain compliance or lack of compliance with the requirements of paragraph 4 above.

6. If it shall be determined by the Commission that reasonable grounds exist to believe that respondents are in violation of the provisions of paragraph 4 above, duly authorized representatives of the Commission shall upon written request, and on reasonable notice to respondents, mailed to their principal offices, be permitted access, during the normal business hours of respondents, to such books, ledgers, accounts, correspondence and other records and documents in the possession or under the control of the company as are reasonably necessary to verify any matter relating to the agreements set forth in paragraph 4 above. Duly authorized representatives of the Commission shall also be permitted to interview appropriate officers and employees of respondents upon reasonable advance notice to the respondents. Such officers and employees may have counsel present at any such interviews.

7. If there is an importation in violation of this order or if the reporting and verification requirements of this order are not complied with, the Commission may assess a civil fine of $10,000 for each day, pursuant to section 1105(b) of the Trade Agreements Act of 1979, or the Commission may order such other remedy as is appropriate, including exclusion of the imports. Each determination of a violation shall be made at a Commission hearing scheduled for that purpose.

8. Information obtained by the Commission under paragraphs 5 and 6 above which shall be designated by respondents as confidential shall only be made available to the Commission or its representatives and shall not be divulged by any representative of the Commission to any other persons, except only upon 10 days written or telephonic notice to respondents and only to the extent as may be required of the Commission by law or court order.

9. Complainant hereby acquiesces to the disposal by respondents of their remaining inventory, which inventory is represented to approximate not more than a few hundred dozen.

In the Matter of CERTAIN APPARATUS FOR THE CONTINUOUS PRODUCTION OF COPPER ROD	Investigation No. 337-TA-89

Notice of Commission Hearing on the Presiding Officer's Recommendation and on Relief, Bonding and the Public Interest, and of the Schedule for Filing Written Submissions

AGENCY: U.S. International Trade Commission.

ACTION: The scheduling of oral argument and briefing for investigation No. 337-TA-89, Certain Apparatus for the Continuous Production of Copper Rod.

Notice is hereby given that the presiding officer has filed her recommended determination regarding complainant's request for a temporary exclusion order on September 26, 1980. She has also certified the evidentiary record to the Commission for its consideration. Interested persons may obtain copies of the presiding officer's recommendation (and all other public documents) by contacting the Office of the Secretary to the Commission, 701 E Street NW., Washington, D.C. 20436.

COMMISSION HEARING: The Commission will hold a hearing beginning at 10 a.m., e.d.t., on October 15, 1980, in the Commission's hearing room (room 331), 701 E Street NW., Washington, D.C. 20436, for two purposes. First, the Commission will hear oral argument on the presiding officer's recommendation that temporary exclusion order should not issue under section 337(f) of the Tariff Act of 1930, as amended. Second, the Commission will hear presentations concerning appropriate relief, bonding and the public interest for consideration in the event that the Commission determines that there is reason to believe that there is a violation of section 337. These matters will be heard on the same day in order to facilitate the completion of this investigation within established time limits and to minimize the

burden of this hearing upon the parties. The procedure for each portion of the hearing follows.

ORAL ARGUMENT: A party to the Commission's investigation or an interested agency wishing to present to the Commission an oral argument concerning the presiding officer's recommendation will be limited to 20 minutes. In addition, such party or agency may present oral argument of up to 10 minutes on the questions of relief, bonding, and the public interest. The oral arguments will be held in this order: complainant, respondent, interested agencies, and Commission investigative attorney. The complainant may reserve up to 5 minutes of its time for rebuttal. The issues of relief, bonding, and public interest are more fully described below.

RELIEF: If the Commission finds that there is reason to believe that a violation of section 337 has occurred, it may issue (1) an order which could result in the temporary exclusion from entry into the United States of certain apparatus for the continuous production of copper rod or (2) an order which could result in requiring the respondent to cease and desist from alleged unfair methods of competition or unfair acts in the importation and sale of such apparatus. Accordingly, the Commission is interested in what relief, if any, should be ordered.

BONDING: If the Commission finds that there is reason to believe that a violation of section 337 has occurred and orders some form of relief, it would not become final for a period during which the President would consider the Commission's report. During this period the apparatus would be entitled to enter the United States under a bond determined by the Commission and prescribed by the Secretary of the Treasury. In addition, should the Commission determine that a temporary exclusion order should issue, it would direct that the articles in question be excluded from entry into the United States during the course of the investigation, except under bond. Accordingly, the Commission is interested in what bond, if any, should be assessed.

PUBLIC INTEREST: If the Commission concludes that there is reason to believe that a violation of section 337 has occurred and orders some form of relief, it must consider the effect of that relief upon the public. Accordingly, the Commission is interested in the effect of any exclusion or cease and desist order upon (1) the public health and welfare, (2) competitive conditions in the U.S. economy, (3) the production of like or directly competitive articles in the United States, and (4) U.S. consumers.

WRITTEN SUBMISSIONS: Parties to the Commission's investigation, interested agencies, and the Commission investigative attorney are encouraged to file briefs on the issues of violation (to the extent they have not already briefed that issue in connection with their

exceptions to the presiding officer's recommended determination), remedy, bonding and public interest in order to give greater focus to the hearing. Such briefs must be filed no later than the close of business October 7, 1980. The parties may be asked during the course of the hearing to file posthearing briefs.

NOTICE OF APPEARANCE: Written requests to appear at the Commission hearing must be filed by October 7, 1980.

ADDITIONAL INFORMATION: The original and 19 true copies of all briefs and written comments and any written request to participate must be filed with the Secretary to the Commission. Any person desiring to discuss confidential information, or to submit a document (or a portion thereof) to the Commission in confidence, must request in camera treatment unless the information has already been granted in camera treatment by the presiding officer. Such request should be directed to the Chairman of the Commission and must include a full statement of the reasons why the Commission should grant such treatment. Documents or arguments reflecting confidential information approved by the Commission for in camera treatment will be treated accordingly. All nonconfidential written submissions will be available for public inspection at the Secretary's office.

Notice of the Commission's investigation was published in the Federal Register of August 13, 1980 (45 F.R. 53923).

FOR FURTHER INFORMATION CONTACT: Jeffrey S. Neeley, Office of the General Counsel, U.S. International Trade Commission; telephone 202–523–0359.

By order of the Commission.

Issued: October 2, 1980.

KENNETH R. MASON,
Secretary.

Index

U.S. Customs Service

Treasury decisions:

Synopses of drawback decisions:

	T.D. No.
Klegecell sheets	80-244-A
Yarn or thread, cotton and polyester or synthetic	80-244-B
Sound signal emitter system	80-244-C
Suits, sport jackets, slacks, shirts and ties (men)	80-244-D
Diesel electric generating units	80-244-E
Preserves and purees	80-244-F
Pump units, centrifugal	80-244-G
Coconut oil soapstock, acidulated	80-244-H
Retainers, needle bearing	80-244-I
Freight cars and other railroad cars	80-244-J
Battery plates, sto age	80-244-K
Fabrics, velvet	80-244-L
Dicarbamate (Mebutamate)	80-244-M
Turret latches	80-244-N
Engine pump	80-244-O
Semiconductor devices, finished	80-244-P
Projection screens, rear	80-244-Q
Grinder-millers, powe quills	80-244-R
Titanium, wire rod, bar, billet	80-244-S
Bromoxynil octanoate, Buctril, Bronate	80-244-T
Trailers, lowbed	80-244-U
Calendars, murals, towels, potholders, tablecloths	80-244-V
Fins, heat exchanger	80-244-W
Noise generators; receivers	80-244-X
Organs, electronic	80-244-Y
Valves, control	80-244-Z
Yarn, cellulose acetate filament	80-245-A
Oil additives, lubricating	80-245-B
Confectionery	80-245-C
Jeans, western	80-245-D
Steel stampings and tubing	80-245-E
Metals, type; babbitt metals	80-245-F
Machinery, construction	80-245-G
Manganese metal chip	80-245-H
Steel in coils, strips, sheets, blanks, plate, bars	80-245-I
Transformers; concrete reactors	80-245-J
Candy products; still beverages	80-245-K
Conveyor belts	80-245-L
Steel strips, cold rolled stainless	80-245-M
Weldments	80-245-N

Treasury decisions—Continued
Synopses of drawback decisions—Continued
Magazines, completed 80-245-O
Magazine sections 80-245-P
Battery end blanks 80-245-Q
Drinks, soft 80-245-R
Antifreeze 80-245-S
Axles, finished trailer 80-245-T
Polyethylene sheet, block, rod, shapes 80-245-U
Drink bases, dry beverage powdered 80-245-V
Orange juice from concentrate 80-245-W
Cigars and cigarillos 80-245-X
Orange juice, concentrated; grapefruit juice, concentrated 80-245-Y
Hair dryers 80-245-Z
Control of identified shipping containers 80-246
Consolidated aircraft bonds 80-247
Daily rates for countries not on quarterly list; foreign currencies: daily certified rates September 22-26, 1980 80-248
Quarterly list of rates of exchange; foreign currencies: certified quarterly rates October 1-December 31, 1980 80-249
Recordation of trade name—Washington Stove Works 80-250

Customs Court

All Writs Act, scope of; jurisdiction, C.R.D. 80-13
Alloy steel, bars of; bars of alloy steel, C.D. 4875
Angles, shapes and sections:
Of alloy iron or steel; Jordan bars, C.D. 4875
Parts, C.D. 4875
Appeals to U.S. Court of Customs and Patent Appeals (p.—):
Appeals:
80-38—Ship epairs; duty on cost of foreign repairs; remission of duty; timeliness of summons; equitable estoppel
80-39—Television camera lens system; mounted lens; optical appliances and instruments; parts of t levision cameras; TSUS
80-40—Imitation leather used for shoe linings; Nonwoven fabrics of man-made fibers; flexible strips and sheets of noncellulosic plastics materials; TSUS
Bars:
Of alloy steel; alloy steel, bars of, C.D. 4875
Shape of cross-section, C.D. 4875
Shapes, C.D. 4875
Classification of merchandise; uniform pra tice, C.D. 4875
Construction:
All Writs Act, C.R.D. 80-13
Code of Federal Regulations, title 19:
Part 127, C.R.D. 80-13
Sec. 153.50, C.R.D. 80-13
Customs Courts Act of 1979 (S. 1654), C.R.D. 80-13
Customs Courts Act of 1980 (H.R. 7540), C.R.D.'s 80-13, 80-14
Tariff Act of 1930, sec. 315d, C.D. 4875

Construction—Continued
Tariff Schedules of the United States:
Item 607.01, C.D. 4875
Item 607.02, C.D. 4875
Items 608.40–608.42, C.D. 4875
Item 608.52, C.D. 4875
Item 609.82, C.D. 4875
Item 668.04, C.D. 4875
Item 668.06, C.D. 4875
Schedule 6, part 2, subpart B:
Headnote 3(d), C.D. 4875
Headnote 3(j), C.D. 4875
Headnote 4, C.D. 4875
U.S. Code:
Title 19:
Sec. 167, C.R.D. 80–13
Sec. 405a, C.R.D. 80–13
Sec. 1315(d), C.D. 4875
Sec. 1451, C.R.D. 80–13
Sec. 1491, C.R.D. 80–13
Sec. 1514(a)(4), C.R.D. 80–13
Title 28:
Sec. 251, C.R.D. 80–13
Sec. 1582(a)(4), C.R.D. 80–13
Sec. 1651(a), C.R.D. 80–13
Customs Court:
Equitable powers, C.R.D. 80–13
Jurisdiction, equitable, C.R.D. 80–13
Scope of equity power, C.R.D. 80–13
Definitions:
Angles, shapes, and sections, C.D. 4875
Bars, C.D. 4875
Deformed concrete reinforcing bars, C.D. 4875
Rectangle, C.D. 4875
Shapes, C.D. 4875
Deformed concrete reinforcing bars; TSUS items 608–40–608.42, C.D. 4875
Equitable powers; Customs Court, C.R.D. 80–13
Injunction, motion for, C.R.D. 80–13
Injunctive relief; order to show cause, C.R.D. 80–13
Intervenor's motion for modification and stay of previous order, C.R.D. 80–14
Jordan bars; angles, shapes and sections of alloy iron or steel, C.D. 4875
Jurisdiction:
All Writs Act, scope of, C.R.D. 80–13
Equitable Customs Court, C.R.D. 80–13
Lexicographic source; *Webster's Third New International Dictionary* (Unabridged) (1966), p. 1899, C.D. 4875
Materials v. parts, C.D. 4875
Memorandum opinion and order:
Motion for modification and stay of previous order denied, C.R.D. 80–14
Sale of general order merchandise enjoined, C.R.D. 80–13

Motion for:
Injunction, C.R.D. 80–13
Modification and stay of previous order denied; memorandum opinion and order, C.R.D. 80–14
Order:
Motion for modification and stay of, C.R.D. 80–14
To show cause; injunctive relief, C.R.D. 80–13
Parts:
Angles, shapes and sections, C.D. 4875
Pulp or paper machines, C.D. 4875
Pulp or paper machines; parts, C.D. 4875
Sale of general order merchandise enjoined; memorandum opinion and order, C.R.D. 80–13
Scope of equity power; Customs Court, C.R.D. 80–13
Shapes; bars, C.D. 4875
Steel, alloy, C.D. 4875
TSUS items 608.40–608.42; deformed concrete reinforcing bars, C.D. 4875
Uniform practice; classification of merchandise, C.D. 4875
Words and phrases:
Angles, shapes and sections, C.D. 4875
Bars, C.D. 4875
Cross-section, C.D. 4875
Deformed concrete reinforcing bars, C.D. 4875
Jordan bars, C.D. 4875
Rectangle, C.D. 4875
Shapes, C.D. 4875

328-840 Item 950-D T 1.11/3:14/44
OCT 20 1980 B78
cor Ctn
H.H.

Customs Bulletin

Regulations, Rulings, Decisions, and Notices concerning Customs and related matters

and Decisions

of the United States Court of Customs and Patent Appeals and the United States Customs Court

9247

Vol. 14 OCTOBER 29, 1980 No. 44

This issue contains

T.D. 80-251 and 80-252

C.D. 4876

Protest abstracts P80/133 through P80/155
Reap. abstracts R80/284 through R80/296
International Trade Commission Notices

THE DEPARTMENT OF THE TREASURY
U.S. Customs Service

NOTICE

The abstracts, rulings, and notices which are issued weekly by the U.S. Customs Service are subject to correction for typographical or other printing errors. Users may notify the U.S. Customs Service, Logistics Management Division, Washington, D.C. 20229, of any such errors in order that corrections may be made before the bound volumes are published.

For sale by the Superintendent of Documents, U.S. Government Printing Office, Washington, D.C. 20402. Price: $2.25 (single copy domestic); $2.85 (single copy foreign). Subscription price: $85.00 a year domestic; $106.25 a year foreign.

U.S. Customs Service

Treasury Decisions

(T.D. 80–251)

Rates of exchange based on rates certified to the Secretary of the Treasury by the Federal Reserve Bank of New York for the Brazil cruzeiro, People's Republic of China yuan, Hong Kong dollar, Iran rial, Philippines peso, Singapore dollar, Thailand baht (tical), and Venezuela bolivar

The Federal Reserve Bank of New York, pursuant to section 522(c), Tariff Act of 1930, as amended (31 U.S.C. 372(c)), has certified buying rates for the dates and foreign currencies shown below. The rates of exchange, based on these buying rates, are published for the information and use of Customs officers and others concerned pursuant to part 159, subpart C, Customs Regulations (19 CFR 159, subpart C).

Brazil cruzeiro:	
September 29–October 3, 1980	$0.0173
People's Republic of China yuan:	
September 29–October 3, 1980	$0.676727
Hong Kong dollar:	
September 29, 1980	$0.200240
September 30, 1980	.200060
October 1, 1980	.199980
October 2, 1980	.200461
October 3, 1980	.200260
Iran rial:	
September 29–October 3, 1980	Not available
Philippines peso:	
September 29–October 2, 1980	$0.1325
October 3, 1980	.1330
Singapore dollar:	
September 29, 1980	$0.473934
September 30, 1980	.475105
October 1, 1980	.476644
October 2, 1980	.475851
October 3, 1980	.475624

Thailand baht (tical):

September 29–October 3, 1980	$0.0488
Venezuela bolivar:	
September 29–October 2, 1980	$0.2329
October 3, 1980	.2330

(LIQ-3-01 O:C:E)

Dated: October 3, 1980.

NANCY I. BROWN,
Chief,
Customs Information Exchange.

(T.D. 80-252)

Customhouse Cartman License—Revocation

Revocation of Customhouse Cartman's License No. 168 issued by the Area Director of Customs, Newark, N.J., to Di Jub Leasing Corp.

Notice is hereby given that on October 7, 1980, pursuant to the provisions of section 565, Tariff Act of 1930, as amended, and section 112.30 of the Customs Regulations (19 CFR 112.30), it was decided to revoke the Customhouse Cartman's License No. 168 issued in the District of Newark on December 19, 1975, to Di Jub Leasing Corp. of Hoboken, N.J. This revocation is effective as of October 7, 1980.

Dated: October 7, 1980.

R. E. CHASEN,
Commissioner of Customs.

[Published in the Federal Register Oct. 20, 1980 (45 F.R. 69337)]

Decisions of the United States Customs Court

United States Customs Court

One Federal Plaza

New York, N.Y. 10007

Chief Judge

Edward D. Re

Judges

Paul P. Rao
Morgan Ford
Scovel Richardson
Frederick Landis
James L. Watson
Herbert N. Maletz
Bernard Newman
Nils A. Boe

Senior Judge

Samuel M. Rosenstein

Clerk

Joseph E. Lombardi

Customs Decision

(C.D. 4876)

F. W. MYERS & CO., INC., PLAINTIFF *v.* UNITED STATES, DEFENDANT

Herbicide containing benzenoid wetting agent

Court No. 77-8-01386

The presence in an herbicide of less than 1 percent of a benzenoid wetting agent did not make the herbicide a mixture "in part" of that wetting agent. A minute partial ingredient whose function is exhausted before the main ingredient begins to work and which is not otherwise present in a commercially significant quantity does not control the

classification. Citing, *United States* v. *Aceto Chemical Co., Inc.*, 64 CCPA 78, C.A.D. 1186, 533 F. 2d 685 (1977).

[Plaintiff's motion for summary judgment granted.]

(Dated October 1, 1980)

Rivkin, Sherman and Levy (*Mary Christine Carty* on the brief) for the plaintiff. *Alice Daniel*, Assistant Attorney General; *Joseph I. Liebman*, Attorney in Charge, Field Office for Customs Litigation (*Sidney N. Weiss*, on the brief), for the defendant.

Memorandum Opinion and Order

Watson, Judge: Plaintiff has moved for summary judgment that the proper tariff classification of an herbicide known as "Sencor 50 Percent Wettable Powder" is as a mixture not specially provided for under item 432.00 of the Tariff Schedules of the United States (TSUS), and that it is dutiable at the rate of 5 percent ad valorem.

Defendant, relying on the presence in the imported mixture of a benzenoid wetting agent, classified the importation under item 409.00 of the TSUS as a mixture in part of a product provided for in subpart C, part 1, schedule 4; dutiable at 3.5 cents per pound plus 22.5 percent ad valorem.

The relevant statutory provisions are as follows:

Statutes Involved

Tariff Schedules of the United States, 19 U.S.C. 1202:

* * * * * * *

GENERAL HEADNOTES AND RULES OF INTERPRETATION

* * * * * * *

9. *Definition.*—For the purposes of the schedules, unless the context otherwise requires—

* * * * * * *

(f) the terms "of", "wholly of" * * * "in part of" and "containing", when used between the description of an article and a material * * * have the following meanings:

* * * * * * *

(iv) "in part of" or "containing" mean that the article contains a significant quantity of the named material.

With regard to the application of the quantitative concept specified in subparagraphs (ii) and (iv) above, it is intended that the de minimis rule apply.

SCHEDULE 4—CHEMICALS AND RELATED PRODUCTS

Schedule 4 headnotes:

* * * * * * *

3. (a) The term "mixture," as used in this schedule means substances consisting of two or more ingredients (i.e., elements or compounds), whether occurring as such in nature, or whether artificially produced * * * which, however thoroughly comingled, retain their individual chemical properties and are not chemically united. * * *

Part 1. Benzenoid Chemicals and Products

Part 1 headnotes

1. Except as specifically set forth in the headnotes to other parts of this schedule, all products described in this part shall be classified hereunder even if more specifically described elsewhere in this schedule. * * *

* * * * * * *

Subpart C—Finished Organic Chemical Products

Products obtained, derived, or manufactured in whole or in part from any product provided for in subpart A or B of this part:

* * * * * * *

405.35	Products * * * chiefly used or any one or combination of the following purposes: as detergents, wetting agents, emulsifiers, dispersants, or foaming agents	1.7¢ per lb. + 12.5% ad val.

* * * * * * *

409.00	Mixtures in whole or in part of any of the products provided for in this subpart	3.5¢ per lb. + 22.5% ad val.

* * * * * * *

Part 2. Chemical Elements, Inorganic and Organic Compounds, and Mixtures

Part 2 headnotes

1. This part covers chemicals, except those provided for elsewhere in this schedule, and those specially provided for in any of the other schedules.

* * * * * * *

Subpart E—Chemical Mixtures

432.00	Mixtures not specially provided for	5% ad val., but not less than the highest rate applicable to any component material.

This herbicide was manufactured in Canada and imported in powder form in 1975 by the plaintiff customhouse broker. It kills weeds by penetrating into their roots before they emerge from the ground and then inhibits the process of photosynthesis by which they would ordinarily grow. The recommended application is by means of mixing with water and spraying on the bare ground before or after planting of the desired crop. The benzenoid wetting agent constitutes less than 1 percent of the importation and aids the dispersal of the herbicide in water by reducing the surface tension between the powder and the water. Although it is not recommended, the powder can be applied in dry form to the ground, and reliance placed on soil moisture and rainfall for penetration.

Defendant has tried to create issues of fact and has attempted to avoid the impact of the decision in *United States* v. *Aceto Chemical Co., Inc.*, 64 CCPA 78, C.A.D. 1186, 533 F. 2d 685 (1977), affirming *Aceto Chemical Co., Inc.* v. *United States*, 75 Cust. Ct. 167, C.D. 4625, 408 F. Supp. 1389 (1975).

In that case the classification of a fungicide (containing less than 1 percent of a benzenoid wetting agent) as a mixture "in part" of a benzenoid product was held to be incorrect. While the appellate court recognized the general congressional intent that mixtures be assessed at the highest rate possible, it held that the intent was not to magnify the importance of minute ingredients whose function was exhausted before the principal ingredient began to operate.

Proper classification as "in part" required that the partial ingredient upon which classification is premised, perform the principal function, in which case its relative quantity was immaterial. See *Northam Warren Corp.* v. *United States*, 60 CCPA 117, C.A.D. 1092, 475 F. 2d 647 (1973). If this functional test was not satisfied then the only other justification for allowing a partial ingredient to control classification was its presence in a quantity which had some independent commercial significance.

The "issues of fact" which defendant asserts in this action regarding the quantity of the benzenoid wetting agent and its greater importance in this particular method of application are really quarrels with the result in the *Aceto* case. The determinative facts here are not in dispute. The quantity of benzenoid wetting agent is less than 1 percent of the importation and has no independent commercial significance. The wetting agent is not an herbicide. It helps the active agent get down to the roots but it does not participate in the inhibition of the weeds' photosynthesis.

In short, the decision in the *Aceto* case is stare decisis. It continues to be incorrect to classify a mixture as being "in part" of a minute benzenoid ingredient whose subsidiary function is exhausted before the principal ingredient begins to work, it is therefore

ORDERED, that plaintiff's motion for summary judgment be granted and, it is further

ORDERED, that the appropriate customs official reliquidate the entries covered by this civil action and classify the merchandise involved under item 432.00 of the TSUS, as a mixture not specially provided for, dutiable at the rate of 5 percent ad valorem.

328-840 O - 80 - 2

Decisions of the United States Customs Court

Abstracts

Abstracted Protest Decisions

DEPARTMENT OF THE TREASURY, *October 6, 1980.*

The following abstracts of decisions of the United States Customs Court at New York are published for the information and guidance of officers of the customs and others concerned. Although the decisions are not of sufficient general interest to print in full, the summary herein given will be of assistance to customs officials in easily locating cases and tracing important facts.

ROBERT E. CHASEN,
Commissioner of Customs.

DECISION NUMBER	JUDGE & DATE OF DECISION	PLAINTIFF	COURT NO.	ASSESSED	HELD	BASIS	PORT OF ENTRY AND MERCHANDISE
				Par. or Item No. and Rate	Par. or Item No. and Rate		
P80/133	Ford, J. September 29, 1980	J. O. Alvarez a/c Florafil, S.A.	70/925, etc.	Item 184.75 10% or 9%	Item 470.80 Free of duty	Joseph F. Hendrix a/c Productos Deshidratados De Mexico, S.A. v. U.S. (C.D. 4809)	Laredo Dehydrated marigold flowers
P80/134	Ford, J. September 29, 1980	J. O. Alvarez a/c Florafil, S.A.	70/940, etc.	Item 184.75 10% or 9%	Item 470.80 Free of duty	Joseph F. Hendrix a/c Productos Deshidratados De Mexico, S.A. v. U.S. (C.D. 4809)	Laredo Dehydrated marigold flowers

P80/135	Ford, J. September 29, 1980	J. O. Alvarez a/c Florafil, S.A.	72-7-01532, etc.	Item 184.75 9%	Item 470.80 Free of duty	Joseph F. Hendrix a/c Productos Deshidratados De Mexico S.A. v. U.S. (C.D. 4809)	Laredo Dehydrated marigold flowers
P80/136	Ford, J. September 29, 1980	J. O. Alvarez a/c Florafil, S.A.	72-7-01534, etc.	Item 184.75 8%	Item 470.80 Free of duty	Joseph F. Hendrix a/c Productos Deshidratados De Mexico, S.A. v. U.S. (C.D. 4809)	Laredo Dehydrated marigold flowers
P80/137	Ford, J. September 29, 1980	J. O. Alvarez a/c Florafil, S.A.	73-2-00339	Item 184.75 8%	Item 470.80 Free of duty	Joseph F. Hendrix a/c Productos Deshidratados De Mexico, S.A. v. U.S. (C.D. 4809)	Laredo Dehydrated marigold flowers
P80/138	Ford, J. September 29, 1980	J. O. Alvarez a/c Florafil, S.A.	73-2-00340, etc.	Item 184.75 8%	Item 470.80 Free of duty	Joseph F. Hendrix a/c Productos Deshidratados De Mexico, S.A. v. U.S. (C.D. 4809)	Laredo Dehydrated marigold flowers
P80/139	Ford, J. September 29, 1980	Victor Cavazos a/c Desy Intl.	77-6-01004	Item 184.75 7.5%	Item 470.80 Free of duty	Joseph F. Hendrix a/c Productos Deshidratados De Mexico, S.A. v. U.S. (C.D. 4809)	Laredo Dehydrated marigold flowers
P80/140	Ford, J. September 29, 1980	Joseph F. Hendrix a/c Florafil, S.A.	73-4-01071	Item 184.75 8% or 7.5%	Item 470.80 Free of duty	Joseph F. Hendrix a/c Productos Deshidratados De Mexico S.A. v. U.S. (C. D. 4809)	Presidio (El Paso) Dehydrated marigold flowers
P80/141	Ford, J. September 29, 1980	Joseph F. Hendrix a/c Productos Deshidratados De Mexico, S.A.	77-3-00460, etc.	Item 184.75 7.5%	Item 470.80 Free of duty	Joseph F. Hendrix a/c Productos Deshidratados De Mexico, S.A. v. U.S. (C.D. 4809)	Presidio (ElPaso) Dehydrated marigold flowers

DECISION NUMBER	JUDGE & DATE OF DECISION	PLAINTIFF	COURT NO.	ASSESSED	HELD	BASIS	PORT OF ENTRY AND MERCHANDISE
				Par. or Item No. and Rate	Par. or Item No. and Rate		
P80/142	Ford, J. September 29, 1980	Joseph F. Hendrix a/c Desy International, Inc., et al.	77-12-04905, etc.	Item 184.75 7.5%	Item 470.80 Free of duty	Joseph F. Hendrix a/c Productos Deshidratados De Mexico, S.A. v. U.S. (C.D.4809)	Presidio (El Paso) Dehydrated marigold flowers
P80/143	Ford, J. September 29, 1980	Joseph F. Hendrix a/c Desy International, Inc.	78-2-00242	Item 184.75 7.5%	Item 470.80 Free of duty	Joseph F. Hendrix a/c Productos Deshidratados De Mexico, SA. v. U.S. (C.D. 4809)	Presidio (El Paso) Dehydrated marigold flowers
P80/144	Ford, J. September 29, 1980	Rettinger Raincoat Mfg. Co., Inc.	79-4-00689	Item 389.62 15% + 25¢ per lb.	Item A774.60 Free of duty	Agreed statement of fact	New York Woven polyethylene textile strips in c.v. of plastic (Tarps); product of beneficiary developing country.
P80/145	Ford, J. September 29, 1980	Barbara M. Todd a/c Special Nutrients, Inc.	67/88315, etc.	Item 184.75 10%	Item 470.80 Free of duty	Joseph F. Hendrix a/c Productos Deshidratados De Mexico, S.A. v. U.S. (C.D. 4809)	San Diego Dehydrated marigold flowers
P80/146	Ford, J. September 30, 1980	Abbey Rents	78-11-01962 10%	Item 727.55	Item 692.10 3% (items marked "A") Item 692.27 4% (items marked "B") Item 727.06 4% (remaining mdse.)	Judgment on the pleadings	Los Angeles Electric wheelchairs and parts thereof

P80/147	Ford, J. September 30, 1980	Abbey Rents	79-4-00705	Item 727.55 10%	Item 692.10 3% (items marked "A") Item 692.27 4% (items marked "B") Item 727.06 4% (remaining mdse.)	Judgment on the pleadings	Los Angeles Electric wheelchairs and parts thereof
P80/148	Ford, J. September 30, 1980	Abbey Rents	79-5-00860	Item 727.55 10%	Item 692.27 or 727.06 4%	Judgment on the pleadings	Los Angeles Parts of electric wheelchairs
P80/149	Ford, J. September 30, 1980	J. O. Alvarez a/c Florafil, S.A.	73-2-00516	Item 184.75 8%	Item 470.80 Free of duty	Joseph F. Hendrix a/c Productos Deshidratados De Mexico, S.A. v. U.S. (C.D. 4809)	Laredo Dehydrated marigold flowers
P80/150	Ford, J. September 30, 1980	J. O. Alvarez a/c Florafil, S.A.	75-12-03259	Item 184.75 8%	Item 470.80 Free of duty	Joseph F. Hendrix a/c Productos Deshidratados De Mexico, S.A. v. U.S. (C.D. 4809)	Laredo Dehydrated marigold flowers
P80/151	Ford, J. September 30, 1980	Victor A. Cavazos a/c Desy International	79-11-01683	Item 184.75 7.5%	Item 470.80 Free of duty	Joseph F. Hendrix a/c Productos Deshidratados De Mexico, S.A. v. U.S. (C.D. 4809)	Laredo Dehydrated marigold flowers
P80/152	Ford, J. September 30, 1980	Joseph F. Hendrix a/c Productos Deshidratados De Mexico, S.A.	77-3-00455, etc.	Item 184.75 7.5%	Item 470.80 Free of duty	Joseph F. Hendrix a/c Productos Deshidratados De Mexico, S.A. v. U.S. (C.D. 4809)	Presidio (El Paso) Dehydrated marigold flowers
P80/153	Ford, J. September 30, 1980	Barbara M. Todd	72-5-01028	Item 184.75 10%	Item 470.80 Free of duty	Joseph F. Hendrix a/c Productos Deshidratados De Mexico, S.A. v. U.S. (C.D. 4809)	San Diego Dehydrated marigold flowers

DECISION NUMBER	JUDGE & DATE OF DECISION	PLAINTIFF	COURT NO.	ASSESSED	HELD	BASIS	PORT OF ENTRY AND MERCHANDISE
				Par. or Item No. and Rate	Par. or Item No. and Rate		
P80/154	Ford, J. October 2, 1980	J. O. Alvarez	70/929, etc.	Item 184.75 10%	Item 470.80 Free of duty	Joseph F. Hendrix a/c Productos Deshidratados De Mexico, S.A. v. U.S. (C.D. 4809)	Laredo Dehydrated marigold flowers
P80/155	Ford, J. October 2, 1980	J. O. Alvarez	70/939, etc.	Item 184.75 10%	Item 470.80 Free of duty	Joseph F. Hendrix a/c Productos Deshidratados De Mexico, S.A. v. U.S. (C.D 4809)	Laredo Dehydrated marigold flowers

Decisions of the United States Customs Court

Abstract

Abstracted Reappraisement Decisions

DECISION NUMBER	JUDGE & DATE OF DECISION	PLAINTIFF	COURT NO.	BASIS OF VALUATION	HELD VALUE	BASIS	PORT OF ENTRY AND MERCHANDISE
R80/284	Re, C.J. September 30, 1980	Holly Stores, Inc.	77-3-00490, etc.	Export value	Appraised values shown on entry papers less additions included to reflect currency revaluation	C.B.S. Imports Corp. v. U.S. (C.D. 4739)	New York Wearing apparel and various other types of articles exported from various countries
R80/285	Re, C.J. September 30, 1980	Leroy Knitted Sportswear	74-2-00332, etc.	Export value	Invoiced unit prices less nondutiable charges (if any) included therein	C.B.S. Imports Corp. v. U.S. (C.D. 4739)	Los Angeles Wearing apparel
R80/286	Re, C.J. September 30, 1980	Regal Accessories, Inc.	73-11-03190	Export value	Appraised values shown on entry papers less additions included to reflect currency revaluation	C.B.S. Imports Corp. v. U.S. (C.D. 4739)	New York Wearing apparel and various other types of articles exported from various countries

DECISION NUMBER	JUDGE & DATE OF DECISION	PLAINTIFF	COURT NO.	BASIS OF VALUATION	HELD VALUE	BASIS	PORT OF ENTRY AND MERCHANDISE
R80/287	Re, C.J. September 30, 1980	Regal Accessories, Inc.	74-5-01402	Export value	Appraised values shown on entry papers less additions included to reflect currency revaluation	C.B.S.Imports Corp. v. U.S. (C.D. 4739)	New York Wearing apparel and various other types of articles exported from various countries
R80/288	Re, C.J. September 30, 1980	Regal Accessories, Inc.	76-6-01457	Export value	Appraised values shown on entry papers less additions included to reflect currency revaluation	C.B.S. Imports Corp. v. U.S. (C.D. 4739)	New York Wearing apparel and various other types of articles exported from various countries
R80/289	Re, C.J. September 30, 1980	Regal Accessories, Inc.	78-3-00508	Export value	Appraised values shown on entry papers less additions included to reflect currency revaluation	C.B.S. Imports Corp. v. U.S. (C.D. 4739)	New York Wearing apparel and other types of articles exported from various countries
R80/290	Ford, J. September 30, 1980	Conti Rubber Products, Inc.	75-3-00717, etc.	Foreign value	Claimed unit values (all in Deutsche mark) listed on schedule attached to decision and judgment	Agreed statement of facts	Portland Oreg. Various automotive tires
R80/291	Ford, J. September 30, 1980	Conti Rubber Products, Inc.	77-10-04553	Foreign value	Claimed unit values (all in Deutsche mark) listed on schedule attached to decision and judgment	Agreed statement of facts	Cleveland Various automotive tires

R80/292	Ford, J. September 30, 1980	Conti Rubber Products, Inc.	78-2-00265	Foreign value	Claimed unit values (all in Deutsche mark) listed on schedule attached to decision and judgment	Agreed statement of facts	Portland, Oreg. Various automotive tires
R80/293	Ford, J. September 30, 1980	Conti Rubber Products, Inc.	78-7-01266	Foreign value	Claimed unit values (all in Deutsche mark) listed on schedule attached to decision and judgment	Agreed statement of facts	Chicago Various automotive tires
R80/294	Ford, J. September 30, 1980	Conti Rubber Products, Inc.	78-8-01534	Foreign value	Claimed unit values (all in Deutsche mark) listed on schedule attached to decision and judgment	Agreed statement of facts	Baltimore Various automotive tires
R80/295	Ford, J. September 30, 1980	A.W. Fenton & Co., Inc., et al.	R65/25092, etc.	Export value	Invoice unit prices less, where applicable, items specified on invoices as saved packing	Agreed statement of facts	Cleveland Instruments and parts
R80/296	Ford, J. October 2, 1980	New York Merchandise Co., Inc.	R66/17206, etc.	Export value	F.o.b. unit invoice prices plus 20% of difference between f.o.b. unit invoice prices and appraised values	Agreed statement of facts	San Diego Batteries

International Trade Commission Notices

Investigations by the U.S. International Trade Commission

DEPARTMENT OF THE TREASURY, Oct. 15, 1980

The appended notices relating to investigations by the U.S. International Trade Commission are published for the information of Customs officers and others concerned.

R. E. CHASEN,
Commissioner of Customs.

731–TA–34 (Preliminary)

PORTABLE ELECTRIC NIBBLERS FROM SWITZERLAND

Notice of Termination of Investigation

AGENCY: U.S. International Trade Commission.

ACTION: Termination of preliminary antidumping investigation.

EFFECTIVE DATE: October 3, 1980.

FOR FURTHER INFORMATION CONTACT: Mr. Daniel Leahy, Office of Investigations; 202–523–1369.

SUPPLEMENTARY INFORMATION: On September 18, 1980, following receipt of a petition filed by the Widder Corp., Naugatuck, Conn., the Commission instituted preliminary antidumping investigation No. 731–TA–34, portable electric nibblers from Switzerland. The purpose of the investigation was to determine whether there is a reasonable indication that an industry in the United States is materially injured, or is threatened with material injury, or the establishment of an industry is materially retarded, by reason of imports from Switzerland of hand directed or controlled nibblers with self-contained electric motors, provided for in item 683.20 of the Tariff Schedules of the United States, sold or likely to be sold at less than fair value.

On October 3, 1980, the Commission received advice from the Department of Commerce that the petition in the subject investiga-

tion had been withdrawn by the petitioner. Pursuant to its authority under section 207.13 of the Commission's Rules of Practice and Procedure, the Commission's investigation concerning portable electric nibblers from Switzerland is hereby terminated.

Issued: October 6, 1980.

KENNETH R. MASON,
Secretary.

(332–114)

STUDY OF PRODUCTION TECHNIQUES AND PRODUCT SPECIALIZATION WITHIN U.S. INDUSTRIES

Notice of Investigation

AGENCY: U.S. International Trade Commission.

ACTION: In accordance with the provisions of section 332 of the Tariff Act of 1930 (19 U.S.C. 1332), the Commission has instituted investigation No. 332–114 for the purpose of analyzing the sources of the variation found within industries in the international competitiveness of U.S. firms and products. The study has been instituted in light of the fact that high levels of import penetration are often found within industries which also have high levels of exports. Important factors may include the availability and use of skilled labor and capital, economies of scale, new technology and production techniques. The report will assist in understanding the causes and composition of U.S. trade flows and the ability of U.S. firms to adjust to import competition.

EFFECTIVE DATE: September 29, 1980.

FOR FURTHER INFORMATION CONTACT: Mr. Dale Larson, Research Division, U.S. International Trade Commission, Washington, D.C. 20436; 202–724–0082.

WRITTEN SUBMISSIONS: Since there will be no public hearing scheduled for this study, written submissions from interested parties are invited concerning any phase of the study. Commercial or financial information which a party desires the Commission to treat as confidential must be submitted on separate sheets of paper, each clearly marked "Confidential Business Information" at the top. All submissions requesting confidential treatment must conform with the requirements of section 201.6 of the Commission's Rules of Practice and Procedure (19 CFR 201.6). All written submissions, except for confidential business information, will be made available for inspection by interested persons. To be assured of consideration by the Com-

mission in this study, written statements should be submitted at the earliest practicable date, but no later than March 31, 1981. All submissions should be addressed to the Secretary at the Commission's office in Washington, D.C.

By order of the Commission.

Issued: October 8, 1980.

KENNETH R. MASON,
Secretary.

(332-115)

STUDY OF THE EFFECTIVENESS OF ESCAPE CLAUSE RELIEF IN PROMOTING ADJUSTMENT TO IMPORT COMPETITION

Notice of Investigation

AGENCY: U.S. International Trade Commission.

ACTION: In accordance with the provisions of section 332 of the Tariff Act of 1930 (19 U.S.C. 1332), the Commission has instituted investigation No. 332-115 for the purpose of assessing the effectiveness of "escape clause" import relief in encouraging and facilitating the adjustment of industries that the Commission has found to be injured by import competition.

In conducting the investigation, the Commission will consider the history of the escape clause from 1951 to the present. An analysis and comparison will be made of all or most petitions for escape-clause relief presented during this period to determine what effect relief from import competition had on the subsequent performance of the industries granted such relief.

EFFECTIVE DATE: September 29, 1980.

FOR FURTHER INFORMATION CONTACT: Mr. Paul Golding, Research Division, U.S. International Trade Commission, Washington, D.C. 20436; 202-724-0092.

WRITTEN SUBMISSIONS: Since there will be no public hearing scheduled for this study, written submissions from interested parties are invited concerning any phase of the study. Commercial or financial information which a party desires the Commission to treat as confidential must be submitted on separate sheets of paper, each clearly marked "Confidential Business Information" at the top. All submissions requesting confidential treatment must conform with the requirements of section 201.6 of the Commission's Rules of Practice and Procedure (19 CFR 201.6). All written submissions, except for

confidential business information, will be made available for inspection by interested persons. To be assured of consideration by the Commission in this study, written statements should be submitted at the earliest practicable date, but no later than March 31, 1981. All submissions should be addressed to the Secretary at the Commission's office in Washington, D.C.

By order of the Commission.

Issued: October 8, 1980.

KENNETH R. MASON,
Secretary.

(332–116)

STUDY OF THE EFFECT OF THE ENLARGEMENT OF THE EUROPEAN COMMUNITY ON U.S. TRADE

Notice of Investigation

AGENCY: U.S. International Trade Commission.

ACTION: In accordance with the provisions of section 332 of the Tariff Act of 1930 (19 U.S.C. 1332), the Commission has instituted investigation No. 332–116 for the purpose of analyzing the probable effects on U.S. trade of the accession to the European Community of Greece, Portugal, and Spain. The report will be chiefly concerned with the prospects for U.S. exports as the three acceding nations adopt the European Community Common Agricultural Policy and as they harmonize their industrial tariffs with European Community rates.

EFFECTIVE DATE: September 29, 1980.

FOR FURTHER INFORMATION CONTACT: Mr. Dale Larson, Research Division, U.S. International Trade Commission, Washington, D.C. 20436; 202–724–0082.

WRITTEN SUBMISSIONS: Since there will be no public hearing scheduled for this study, written submissions from interested parties are invited concerning any phase of the study. Commercial or financial information which a party desires the Commission to treat as confidential must be submitted on separate sheets of paper, each clearly marked "Confidential Business Information" at the top. All submissions requesting confidential treatment must conform with the requirements of section 201.6 of the Commission's Rules of Practice and Procedure (19 CFR 201.6). All written submissions, except for confidential business information, will be made available for inspection by interested persons. To be assured of consideration by the Commis-

sion in this study, written statements should be submitted at the earliest practicable date, but no later than March 31, 1981. All submissions should be addressed to the Secretary at the Commission's office in Washington, D.C.

By order of the Commission.

Issued: October 8, 1980.

KENNETH R. MASON,
Secretary.

Notice of Investigation (332–117)

STUDY OF THE OPERATION OF EXPORT RESTRAINT AGREEMENTS

AGENCY: U.S. International Trade Commission.

ACTION: In accordance with the provisions of section 332 of the Tariff Act of 1930 (19 U.S.C. 1332), the Commission has instituted investigation No. 332–117 for the purpose of assessing U.S. experience with export restraints as a remedy for import-caused injury.

In its investigation, the Commission will examine the effects of restraints imposed by foreign countries on their exports to the United States of steel, footwear and television receivers as a result of restraint agreements negotiated by United States in the 1970's. The study will consider the effects of these agreements on the price, volume and quality of U.S. imports, as well as the distribution of gains and losses among the affected parties.

EFFECTIVE DATE: September 29, 1980.

FOR FURTHER INFORMATION CONTACT: Mr. Dale Larson, Research Division, U.S. International Trade Commission, Washington, D.C. 20436; phone 202–724–0082.

WRITTEN SUBMISSIONS: Since there will be no public hearing scheduled for this study, written submissions from interested parties are invited concerning any phase of the study. Commercial or financial information which a party desires the Commission to treat as confidential must be submitted on separate sheets of paper, each clearly marked "Confidential Business Information" at the top. All submissions requesting confidential treatment must conform with the requirements of section 201.6 of the Commission's Rules of Practice and Procedure (19 CFR 201.6). All written submissions, except for confidential business information, will be made available for inspection by interested persons. To be assured of consideration by the Commission in this study, written statements should be submitted at the

earliest practicable date, but no later than March 31, 1981. All submissions should be addressed to the Secretary at the Commission's office in Washington, D.C.

By order of the Commission.

Issued: October 8, 1980.

KENNETH R. MASON,
Secretary.

In the Matter of CERTAIN SKATEBOARDS AND PLATFORMS THEREFOR	Investigation No. 337-TA-37

Commission Determination and Order

After an investigation conducted under the authority of section 337 of the Tariff Act of 1930 (19 U.S.C. 1337), the U.S. International Trade Commission determined on November 13, 1978, that there were no unfair methods of competition or unfair acts in the importation of certain skateboards and platforms therefor into the United States, or in their sale in the United States by the owner, importer, consignee, or agent of either, the effect or tendency of which was to destroy or substantially injure an industry, efficiently and economically operated, in the United States. The Commission's determination was appealed to the U.S. Court of Customs and Patent Appeals pursuant to section 337(c) (19 U.S.C. 1337(c)). On December 20, 1979, that court reversed the Commission's determination that there was no violation of section 337, and remanded the case to the Commission for action consistent with the court's opinion.[1]

The purpose of this Commission determination and order is to provide for final disposition of the Commission's investigation on skateboards.

DETERMINATION

Having reviewed the record compiled in this investigation, the Commission on August 13, 1980, determined—

1. That there is a violation of section 337 of the Tariff Act of 1930 in the importation into and sale in the United States of certain skateboards by the owner, importer, consignee, or agent of either, the effect or tendency of which is to substantially injure an industry, efficiently and economically operated, in the United States;

---

[1] *Stevenson v. U.S. International Trade Commission et al.*, 612 F. 2d 546, 204 USPQ 276 (CCPA 1979).

2. That the appropriate remedy for such violation is to direct that skateboards and platforms therefor manufactured abroad which infringe claims 1, 2, 7, or 8 or U.S. Letters Patent 3,565,454 be excluded from entry into the United States for the term of said patent, except where such importation is licensed by the owner of said patent;

3. That, after considering the effect of such exclusion upon the public health and welfare, competitive conditions in the U.S. economy, the production of like or directly competitive articles in the United States, and U.S. consumers, such skateboards and platforms therefor should be excluded from entry; and

4. That the bond provided for in subsection (g)(3) of section 337 of the Tariff Act of 1930 should be waived.

ORDER

Accordingly, it is hereby ordered—

1. That skateboards and platforms therefor which infringe claims 1, 2, 7, or 8 of U.S. Letters Patent 3,565,454 are excluded from entry into the United States for the term of said patent, except where such importation is licensed by the owner of said patent;

2. That skateboards and platforms therefor ordered to be excluded from entry are entitled to entry into the United States without bond from the day after this order is received by the President pursuant to section 337(g) of the Tariff Act of 1930 until such time as the President notifies the Commission that he approves or disapproves this action, but, in any event, not later than 60 days after such date of receipt;

3. That this order and determination be published in the Federal Register and served upon each party of record in this investigation and upon the U.S. Department of Health and Human Services, the U.S. Department of Justice, the Federal Trade Commission, and the Secretary of the Treasury; and

4. That the Commission may amend this order at any time.

By order of the Commission.

Issued: October 9, 1980.

KENNETH R. MASON,
Secretary.

Index

U.S. Customs Service

Treasury decisions: T.D. No.
Foreign currencies—daily rates for countries not on the quarterly list ---------- 80-251
Revocation of Cartman's license No. 168, Di Job Corp., Hoboken, N.J., issued in the district of Newark, December 19, 1975 ------- 80-252

Customs Court

Benzenoid wetting agent, C.D. 4876
Classification as "in part"; in part, C.D. 4876
Construction; Tariff Schedules of the United States:
General headnotes and rules of interpretation, headnote 9(f)(iv), C.D. 4876
Schedule 4:
Headnote 3(a), C.D. 4876
Part 1, subpart C, C.D. 4876
Part 2, headnote 1, C.D. 4876
Definition; in part of, C.D. 4876
Herbicide:
Containing benzenoid wetting agent; memorandum opinion and order, C.D. 4876
Mixture not specially provided for, C.D. 4876
Sencor 50-percent wettable powder, C.D. 4876
In part; classification as "in part," C.D. 4876
Memorandum opinion and order; herbicide containing benzenoid wetting agent, C.D. 4876
Mixture:
In part of a benzenoid product, C.D. 4876
Not specially provided for; herbicide, C.D. 4876
Motion for summary judgment, C.D. 4876
Sencor 50-percent wettable powder; herbicide, C.D. 4876
Summary judgment, motion for, C.D. 4876
Words and phrases; in part of, C.D. 4876

U.S. GOVERNMENT PRINTING OFFICE : 1980 O - 328-840

T# 331-467 Item 950-D T1.11/3:14/45
C-378

Customs Bulletin

Regulations, Rulings, Decisions, and Notices concerning Customs and related matters

and Decisions

of the United States Court of Customs and Patent Appeals and the United States Customs Court

Contin
9247

Vol. 14 NOVEMBER 5, 1980 No. 45

This issue contains

T.D. 80–253 through 80–257

PROPOSED RULEMAKING

C.R.D. 80–15 through 80–17

International Trade Commission Notices

THE DEPARTMENT OF THE TREASURY
U.S. Customs Service

NOTICE

The abstracts, rulings, and notices which are issued weekly by the U.S. Customs Service are subject to correction for typographical or other printing errors. Users may notify the U.S. Customs Service, Logistics Management Division, Washington, D.C. 20229, of any such errors in order that corrections may be made before the bound volumes are published.

For sale by the Superintendent of Documents, U.S. Government Printing Office, Washington, D.C. 20402. Price: $2.25 (single copy domestic); $2.85 (single copy foreign). Subscription price: $85.00 a year domestic; $106.25 a year foreign.

U.S. Customs Service

Treasury Decisions

(T.D. 80–253)

Country-of-Origin Marking for Merchandise Imported From the People's Republic of China and Taiwan

AGENCY: U.S. Customs Service, Department of the Treasury.

ACTION: Notice of Customs Service decision.

SUMMARY: A recent Customs Service decision has distinguished between country-of-origin marking for merchandise imported from (1) the People's Republic of China and (2) Taiwan. In the decision, the Customs Service held that merchandise from the People's Republic of China may be marked to show the country of origin by use of the words "China" or "The People's Republic of China" or "People's Republic of China." However, articles manufactured or produced in Taiwan must bear the official country-of-origin markings "Taiwan" or "Made in Taiwan."

With respect to articles from Taiwan, the words "Republic of China" or the initials "ROC" do not denominate a government or state recognized by the United States. However, if these designations on articles from Taiwan are preceded by the official country-of-origin markings "Taiwan" or "Made in Taiwan," such articles will not be denied admission into the United States.

DATES: The Customs Service decision is dated July 25, 1980.

FOR FURTHER INFORMATION CONTACT: Darrell D. Kast, Entry, Licensing and Restricted Merchandise Branch, U.S. Customs Service, 1301 Constitution Avenue NW., Washington, D.C. 20229; 202–566–5765.

Dated: October 16, 1980.

SALVATORE E. CARAMAGNO
(For Director, Office of
Regulation and Rulings).

[Published in the Federal Register, Oct. 24, 1980 (45 F.R. 70622)]

(T.D. 80–254)

Bonds

Approval and discontinuance of carriers bonds, Customs form 3578

Bonds of carriers for the transportation of bonded merchandise have been approved or discontinued as shown below. The symbol "D" indicates that the bond previously outstanding has been discontinued on the month, day, and year represented by the figures which follow. "PB" refers to a previous bond, dated as represented by figures in parentheses immediately following, which has been discontinued. If the previous bond was in the name of a different company or if the surety was different, the information is shown in a footnote at the end of the list.

Dated: October 20, 1980.

Name of principal and surety	Date of bond	Date of approval	Filed with district director/area director/amount
Adams Cartage Ltd., 330 Russell St., Windsor, Ontario, Canada; motor carrier; Royal Globe Ins. Co. (PB 8/8/72) D 9/9/80 [1]	Aug. 7, 1980	Sept. 9, 1980	Detroit, MI $50,000
American Industrial Transportation, Inc., Highway 259 South, Henderson, TX; motor carrier; St. Paul Fire & Marine Ins. Co.	Sept. 10, 1980	Sept. 11, 1980	Detroit, MI $50,000
Art Brockman Inc., 14230 Joy Rd., Detroit, MI; motor carrier; United States Fidelity & Guaranty Co. (PB 8/9/73) D 8/11/80 [2]	Aug. 9, 1980	Aug. 11, 1980	Detroit, MI $50,000
Mae Weier d/b/a Chuck's Cartage Co., 5785 Rochelle Dr., Greendale, WI; motor carrier; Fireman's Ins. Co. of Newark, NJ	May 29, 1980	July 30, 1980	Milwaukee, WI $25,000
Concord Trucking, Ltd., New Dayton, Alberta, Canada, motor carrier, The Aetna Casualty & Surety Co.	Sept. 1, 1980	Sept. 16, 1980	Great Falls, MT $25,000
Containerfreight Transportation Co., 2300 Supulveda Blvd., Wilmington, CA; motor carrier; Fidelity & Deposit Co. of MD (PB 7/24/76) D 8/11/80 [3]	July 23, 1980	Aug. 11, 1980	San Francisco, CA $50,000
Deluxe Lines, Inc., P.O. Box 4921, Syracuse, NY; motor carrier; St. Paul Fire & Marine Ins. Co.	Aug. 26, 1980	Sept. 16, 1980	Ogdensburg, NY $25,000
Frank P. Dow Co., Inc., Olympic National Bldg., Seattle, WA; Freight Forwarder; Massachusetts Bay Ins. Co.	Aug. 5, 1980	Aug. 11, 1980	Seattle, WA $50,000
Leo Fix Transfer & Storage Co., Inc., 4700 Denver Ave., South, Seattle, WA; motor carrier; The Continental Ins. Co.	May 22, 1980	May 28, 1980	Seattle, WA $25,000
JTX, Inc., 110 Brannon St., San Francisco, CA; motor carrier; St. Paul Fire & Marine Ins. Co.	Sept. 3, 1980	Sept. 12, 1980	San Francisco, CA $25,000

Name of principal and surety	Date of bond	Date of approval	Filed with district director/area director/amount
Bill McKeen Trucking Ltd., P.O. Box 112, Comber, Ontario, Canada; motor carrier; St. Paul Fire & Marine Ins. Co.	Sept. 5, 1980	Sept. 11, 1980	Detroit, MI $50,000
Specialized Trucking Service, Inc., 2301 Milwaukee Way, Tacoma, WA, motor carrier; Transamerica Ins. Co. (PB 8/10/79) D 9/11/80 [4]	Aug. 21, 1980	Sept. 12, 1980	Seattle, WA $25,000
Villanueva Transfer, Inc., and/or International Trucking Co., Inc., 201 Corpus Christi St., Laredo, TX; motor carrier; United States Fidelity & Guaranty Co.	Sept. 4, 1980	Sept. 8, 1980	Laredo, TX $25,000
Jonel, Inc., d/b/a WILL-CIN, 350 Carlson Blvd., Richmond, CA, motor carrier; Fireman's Fund Ins. Co.	May 23, 1980	Sept. 19, 1980	San Francisco, CA $25,000
Wilson Freight Co., 11353 Reed Hartman Highway, Cincinnati, OH; motor carrier; The American Druggist' Ins. Co. D 9/19/80	Dec. 20, 1978	Jan. 23, 1979	Cleveland, OH $100,000

[1] Surety is Transamerica Ins. Co.
[2] Surety is Federal Insurance Co.
[3] Surety is Pacific Employers Ins. Co.
[4] Surety is Mid-Century Ins. Co.

BON-3-03

ALFRED G. SCHOLLE,
Director,
Carriers, Drawback and Bonds Division.

(T.D. 80-255)

Special Tonnage Tax and Light Money—Customs Regulations Amended

Foreign discriminating duties of tonnage and impost with respect to vessels of and certain imports from the Netherlands Antilles suspended and discontinued; section 4.22, Customs Regulations, amended

TITLE 19—CUSTOMS DUTIES

CHAPTER I—U.S. CUSTOMS SERVICE

PART 4—VESSELS IN FOREIGN AND DOMESTIC TRADES

AGENCY: U.S. Customs Service, Department of the Treasury.

ACTION: Final rule.

SUMMARY: This rule adds the Netherlands Antilles to the list of nations whose vessels are exempted from the payment of higher

tonnage duties than are applicable to vessels of the United States and from the payment of light money. Satisfactory evidence has been obtained by the Department of State that no discriminating duties of tonnage or impost are imposed in ports of the Netherlands Antilles upon vessels belonging to citizens of the United States or on their cargoes.

EFFECTIVE DATE: The exemption became effective December 5, 1957.

FOR FURTHER INFORMATION CONTACT: John Mathis, Carriers, Drawback and Bonds Division, U.S. Customs Service, 1301 Constitution Avenue NW., Washington, D.C. 20229; 202-566-5706.

SUPPLEMENTARY INFORMATION:

BACKGROUND

Generally, the United States imposes regular and special tonnage taxes, and a duty of a specified amount per ton, known as light money, on all foreign vessels which enter U.S. ports (46 U.S.C. 121, 128). However, vessels of a foreign nation may be exempted from the payment of special tonnage taxes and light money upon presentation of proof satisfactory to the President that no discriminatory duties of tonnage or imposts are imposed by that foreign nation on U.S. vessels or their cargoes (46 U.S.C. 141). The President has delegated the authority to grant this exemption to the Secretary of the Treasury. Section 4.22, Customs Regulations (19 CFR 4.22), lists those nations whose vessels have been exempted from the payment of any higher tonnage duties than are applicable to vessels of the United States and from the payment of light money.

On August 1, 1979, the Department of State advised the Department of the Treasury that under article XIX of the Treaty of Friendship, Commerce and Navigation between the United States and the Kingdom of the Netherlands, signed March 27, 1956 (TIAS 3942), vessels of both parties are accorded national and most-favored-nation treatment within each other's ports and waters. Hence, the treaty precludes either party from imposing any charges on the other party's vessels which are any higher than those imposed on its own vessels or the vessels of any third nation which call at its ports.

This provision of the treaty was extended to the Netherlands Antilles, as from the date the treaty entered into force, by an exchange of notes in Washington on November 5, 1957, pursuant to the procedure set forth in article XXIV of the treaty. Consequently, there is satisfactory evidence which would permit the Secretary of the Treasury to find that effective December 5, 1957, the date the treaty entered into force, vessels of the Netherlands Antilles are entitled to

the exemption, and the Department of State has requested that such vessels be afforded the exemption.

DECLARATION

Therefore, by virtue of the authority vested in the President by section 4228 of the Revised Statutes, as amended (46 U.S.C. 141), and delegated to the Secretary of the Treasury by Executive Order No. 10289, September 17, 1951, as amended by Executive Order No. 10882, July 18, 1960 (3 CFR, 1959–63 Comp., ch. II), and pursuant to the authorization provided by Treasury Department order No. 101–5 (44 F.R. 31057), I declare that the foreign discriminating duties of tonnage and impost within the United States are suspended and discontinued, in respect to vessels of the Netherlands Antilles and the produce, manufactures, or merchandise imported into the United States in such vessels from the Netherlands Antilles or from any other foreign country.

This suspension and discontinuance shall take effect from December 5, 1957, in respect to vessels of the Netherlands Antilles and shall continue only for so long as the reciprocal exemptions of vessels wholly belonging to citizens of the United States and their cargoes shall be continued.

AMENDMENT TO THE REGULATIONS

In accordance with this declaration, section 4.22, Customs Regulations (19 CFR 4.22), is amended by adding "Netherlands Antilles" in the appropriate alphabetical sequence in the list of nations whose vessels are exempted from the payment of any higher tonnage duties than are applicable to vessels of the United States and from the payment of light money. (R.S. 251, as amended, 4219, as amended, 4255, as amended, 4228, as amended, sec. 3, 23 Stat. 119, as amended, sec. 624, 46 Stat. 759 (19 U.S.C. 66, 1624, 46 U.S.C. 5, 121, 128, 141).)

INAPPLICABILITY OF PUBLIC NOTICE AND DELAYED EFFECTIVE DATE REQUIREMENTS

Because this amendment merely implements a statutory requirement and involves a matter in which the public is not particularly interested, pursuant to 5 U.S.C. 553(b)(B), notice and public procedure thereon are unnecessary. Further, for the same reasons, good cause exists for dispensing with a delayed effective date under 5 U.S.C. 553(d).

REGULATIONS DETERMINED TO BE NONSIGNIFICANT

In a directive published in the Federal Register on November 8, 1978 (43 F.R. 52120), implementing Executive Order 12044, "Improving Government Regulations" the Treasury Department stated

that it considers each regulation or amendment to an existing regulation published in the Federal Register and codified in the Code of Federal Regulations to be significant. However, regulations of this nature, which are nonsubstantive, are essentially procedural, do not materially change existing or establish new policy, and do not impose substantial additional requirements or costs on, or substantially alter the legal rights or obligations of, those affected, may, with secretarial approval, be determined not to be significant. Accordingly, it has been determined that this amendment does not meet the Treasury Department criteria in the directive for significant regulations.

DRAFTING INFORMATION

The principal author of this document was Janet L. Johnson, Regulations and Research Division, Office of Regulations and Rulings, U.S. Customs Service. However, personnel from other offices of the Customs Service and the Departments of State and the Treasury participated in its development.

Dated: October 6, 1980.

RICHARD J. DAVIS,
Assistant Secretary of the Treasury.

[Published in the Federal Register, October 27, 1980 (45 FR 70857)]

(T.D. 80–256)

Foreign Currencies—Daily Rates for Countries Not on Quarterly List

Rates of exchange based on rates certified to the Secretary of the Treasury by the Federal Reserve Bank of New York for the Brazil cruzeiro, People's Republic of China yuan, Hong Kong dollar, Iran rial, Philippines peso, Singapore dollar, Thailand baht (tical), and Venezuela bolivar

The Federal Reserve Bank of New York, pursuant to section 522(c), Tariff Act of 1930, as amended (31 U.S.C. 372(c)), has certified buying rates for the dates and foreign currencies shown below. The rates of exchange, based on these buying rates, are published for the information and use of Customs officers and others concerned pursuant to part 159, subpart C, Customs Regulations (19 CFR 159, subpart C).

Brazil cruzeiro:	
October 6–8, 1980	$0.0173
October 9–10, 1980	.0171
People's Republic of China yuan:	
October 6–10, 1980	$0.676727
Hong Kong dollar:	
October 6, 1980	$0.199980
October 7, 1980	.199800
October 8, 1980	.199402
October 9, 1980	.199005
October 10, 1980	.199641

Iran rial:	
October 6–10, 1980	Not available
Philippines peso:	
October 6–10, 1980	$0. 1338
Singapore dollar:	
October 6, 1980	$0. 475851
October 7, 1980	. 474947
October 8, 1980	. 476077
October 9, 1980	. 476190
October 10, 1980	. 477327
Thailand baht (tical):	
October 6–10, 1980	$0. 0488
Venezuela bolivar:	
October 6–10, 1980	$0. 2330

(LIQ-3-01 O:C:E)

Dated: October 15, 1980.

NANCY I. BROWN,
Chief,
Customs Information Exchange.

(T.D. 80-257)

Foreign Currencies—Variances From Quarterly Rate

The following rates of exchange are based upon rates certified to the Secretary of the Treasury by the Federal Reserve Bank of New York, pursuant to section 522(c), Tariff Act of 1930, as amended (31 U.S.C. 372(c)), and reflect variances of 5 per centum or more from the quarterly rate published in TD. 80-197 for the following countries. Therefore, as to entries covering merchandise exported on the dates listed, whenever it is necessary for Customs purposes to convert such currency into currency of the United States, conversion shall be at the following rates:

Spain peseta:	
September 30, 1980	$0. 013523

(LIQ-3-01 O:C:E)

Dated: September 30, 1980.

NANCY I. BROWN,
Chief,
Customs Information Exchange.

U.S. Customs Service

Proposed Rulemaking

(19 CFR Part 148)

Personal Declarations and Exemptions

AGENCY: U.S. Customs Service, Department of the Treasury.

ACTION: Proposed rule.

SUMMARY: This document proposes to amend the Customs Regulations to provide that a crewmember shall not be considered a returning resident qualifying for the personal exemptions from the payment of duties and taxes allowed under the Tariff Schedules of the United States, unless the crewmember permanently leaves the vessel, vehicle, or aircraft in which he arrived from a foreign port, without the intention of resuming employment on the same or any other carrier engaged in international traffic. The change is proposed to insure uniform treatment of crewmembers nationwide and to conform the regulations with a headnote of the Tariff Schedules of the United States.

DATE: Comments must be received on or before 60 days after publication in the Federal Register.

ADDRESS: Comments may be addressed to the Commissioner of Customs, attention: Regulations and Research Division, U.S. Customs Service, 1301 Constitution Avenue NW., room 2426, Washington, D.C. 20229.

FOR FURTHER INFORMATION CONTACT: James F. Bartley, Entry Procedures and Penalties Division, U.S. Customs Service, 1301 Constitution Avenue NW., Washington, D.C. 20229; 202-566-5765.

SUPPLEMENTARY INFORMATION:

BACKGROUND

The personal exemptions from the payment of duty and taxes imposed on imported merchandise to which residents and nonresidents of the United States are entitled are set forth in schedule 8, part 2A. Tariff Schedules of the United States (TSUS) (19 U.S.C. 1202),

Headnote 3 of schedule 8, part 2A, TSUS, provides that a person arriving on duty as an employee of a vessel, vehicle, or aircraft engaged in international traffic, or arriving from a trip during which he was so employed, shall not be entitled to any of the personal exemptions other than those in item 814.00, TSUS, relating to articles for bona fide personal use which will be taken out of the United States, unless he is permanently leaving such employment without the intention of resuming it on the same or another carrier.

Under section 148.65(a), Customs Regulations (19 CFR 148.65(a)), a crewmember may qualify as a returning resident and be entitled to the exemptions allowed under schedule 8, part 2A, TSUS, in two situations. Section 148.65(a)(1) reflects the provisions of headnote 3, schedule 8, part 2A, TSUS, and provides that a crewmember may qualify as a returning resident if he permanently leaves the carrier without the intention of resuming his employment on the same or another carrier engaged in international traffic. Under section 148.65(a)(2), a crewmember may also qualify as a returning resident if he remains on, or transfers to, a vessel which is to proceed to another port of the United States in a movement in which entry of the vessel will not be required.

Section 148.65(a)(2) apparently conflicts with the criteria set forth in headnote 3, of schedule 8, part 2A, TSUS, and Customs believes that the headnote must take precedence over the Customs Regulations. To resolve this discrepancy and to insure uniform treatment of of crewmembers, it is proposed to amend section 148.65(a) by including subparagraph (1) in the text of paragraph (a) and deleting subparagraph (2). As a conforming change, the reference to paragraphs (1) and (2) of section 148.65(a) would be deleted from section 148.65(b).

PROPOSED AMENDMENT

It is proposed to amend section 148.65, Customs Regulations (19 CFR 148.65), to read as follows:

148.65 Exemption for resident crewmembers.

(a) *Status as returning resident.*—A crewmember arriving in a vessel, vehicle, or aircraft from a foreign port who is a resident of the United States shall be considered a returning resident qualifying for the exemptions allowed under schedule 8, part 2A, Tariff Schedules of the United States (19 U.S.C. 1202), and subpart D of this part if he permanently leaves the carrier without the intention of resuming his employment on the same or any other carrier that is engaged in international traffic.

(b) *Statement of declaration.*—A resident crewmember who claims that articles declared by him are entitled to be passed free of duty and tax under the returning resident's exemption, shall include a legible statement on the declaration, Customs form 5129, of the basis for his claim for entitlement to the resident's exemption.

AUTHORITY

These amendments are proposed under the authority of R.S. 251, as amended, sections 498, 624, 46 Stat. 728, as amended, 759, 5 U.S.C. 301 (19 U.S.C. 66, 1202, general headnote 11, Tariff Schedules of the United States, 1498, 1624).

COMMENTS

Before adopting this proposal, consideration will be given to any written comments, preferably in triplicate, submitted timely to the Commissioner of Customs. Comments submitted will be available for public inspection in accordance with section 103.8(b), Customs Regulations (19 CFR 103.8(b)), during regular business hours at the Regulations and Research Division, Headquarters, U.S. Customs Service, 1301 Constitution Avenue NW., room 2426, Washington, D.C. 20229.

INAPPLICABILITY OF EXECUTIVE ORDER 12044

This document is not subject to the Departmental directive implementing Executive Order 12044, Improving Government Regulations, because the regulation was in process before May 22, 1978, the effective date of the directive.

DRAFTING INFORMATION

The principal author of this document was Laurie Strassberg Amster, Regulations and Research Division, Office of Regulations and Rulings, U.S. Customs Service. However, personnel from other Customs offices participated in its development.

William T. Archey,
Commissioner of Customs.

Approved: September 19, 1980.
RICHARD J. DAVIS,
Assistant Secretary of the Treasury.

[Published in the Federal Register, Oct. 24, 1980 (45 F.R. 70476)]

Decisions of the United States Customs Court

United States Customs Court

One Federal Plaza
New York, N.Y. 10007

Chief Judge

Edward D. Re

Judges

Paul P. Rao
Morgan Ford
Scovel Richardson
Frederick Landis
James L. Watson
Herbert N. Maletz
Bernard Newman
Nils A. Boe

Senior Judge

Samuel M. Rosenstein

Clerk

Joseph E. Lombardi

Customs Rules Decision

(C.R.D. 80–15)

HENKEL CORPORATION, ET AL., PLAINTIFF, *v.* UNITED STATES, DEFENDANT

Memorandum Opinion and Order

Court No. 80–6–00910

(Dated October 8, 1980)

FORD, Judge: This matter is before the court by virtue of a motion by defendant for a protective order with respect to document No. 11 on list No. 2 of the administrative record.

331-467 O - 80 - 2

The action was instituted under the provision of section 516A(2)(A) against a final negative determination by the U.S. International Trade Commission in a countervailing duty investigation on May 7, 1980, concerning dextrines and soluble or chemically treated starches derived from corn or potato starch from Belgium, Denmark, the Federal Republic of Germany, France, Ireland, Italy, Luxembourg, the Netherlands, and the United Kingdom. Plaintiff on June 4, 1980, filed a request for injunction against the liquidation of all entries of such merchandise pending a decision on the merits. Defendant opposed said request for injunction which was denied on June 12, 1980.

The administrative record was filed with the court on July 28, 1980. On September 22, 1980, defendant moved for a protective order for document No. 11 on list No. 2 of the administrative record on the basis of privilege. Plaintiff on October 1, 1980, opposed this motion on the ground that it contained facts which should be discoverable.

Based upon the motion papers, and an examination by the court in camera, it appears that document No. 11 of list No. 2 consists of pro and con statements which the affidavit of Bill Alberger, Chairman of the U.S. International Trade Commission, states was reviewed by him and was found to consist of an internal communication prepared by the members of the Commission's staff, solely for the use of the Commissioners or staff. Said document comprises part of the process by which the Commission's decisions are formulated, but it may or may not reflect the ultimate view of the Commissioners or the Commission.

A proper claim of privilege having been asserted, the court finds the law on pro and con statements to be settled. Documents of this type were held to be the subject of a protective order on the ground of privilege in *SCM Corporation* v. *United States*, 82 Cust. Ct. 351, C.R.D. 79–11 (1979) and *Sprague Electric Company* v. *United States*, 81 Cust. Ct. 168, C.R.D. 78–18 (1978) and cases cited therein.

In *SCM*, Chief Judge Re succinctly summed up the rationale behind governmental privilege as follows:

> The privilege exists to encourage uninhibited and frank internal discussion in the formulation of governmental policy and decisionmaking. In the words of Mr. Chief Justice Burger, the privilege is necessary because "(h)uman experience teaches that those who expect public dissemination of their remarks may well temper candor with a concern for appearances * * * to the detriment of the decisionmaking process." *United States* v. *Nixon*, 418 U.S. 683, 705, 94 S.Ct. 3090 (1974). See also *NLRB* v. *Sears, Roebuck & Co.*, 421 U.S. 132, 95 S.Ct. 1504 (1975). [P. 357.]

For the above reasons, it is

ORDERED that document No. 11, listed on list No. 2, part of the administrative record previously transmitted to the clerk of this court in this case, is hereby recognized as a privileged document not subject to discovery or disclosure.

(C.R.D. 80-16)

ATLANTIC SUGAR, LTD., ET AL., PLAINTIFFS *v.* THE UNITED STATES, DEFENDANT, AMSTAR CORPORATION, INTERVENOR

Memorandum Opinion and Order

Court No. 80-5-00754

(Dated October 8, 1980)

WATSON, Judge: This is an action under 19 U.S.C. 1516a(a)(2) for judicial review of an administrative injury determination in a dumping investigation of Canadian sugar.

Defendant has moved for a protective order relieving it from answering plaintiffs' interrogatories. Defendant argues that this is a judicial review of an established administrative record in which interrogatories are inappropriate unless they are needed to correct an apparent incompleteness of the record. Plaintiffs argue that their questions are intended to fill in gaps in the record. However, the gaps to which it refers are not missing parts of the record but rather asserted inconsistencies or perceived deficiencies in the formulation and expression of the administrative rationale.

Accordingly, the interrogatories are really an attempt to force the defendant to clarify and justify the administrative determination. Discovery of that type goes outside the express limitation of this action to a review on the record. 19 U.S.C. 1516a(b)(1)(B).

Those instances of reviews on the record in which interrogatories were permitted were either cases of apparent incompleteness of the record as in *Tenneco Oil Co.* v. *Department of Energy*, 475 F. Supp. 299 (D. Del. 1979) or clear failures to articulate the administrative findings as in *Smith* v. *F.T.C.*, 403 F. Supp. 1000 (D. Del. 1975). Neither situation has been shown to exist here.

Accordingly, it is

ORDERED, that defendant's motion for a protective order is granted and it is further

ORDERED, that defendant is relieved from answering these interrogatories.

(C.R.D. 80-17)

CONNORS STEEL COMPANY, PLAINTIFF *v.* THE UNITED STATES, DEFENDANT

Memorandum Opinion and Order

Court No. 80-5-00478

(Dated October 10, 1980)

WATSON, Judge: This is an action brought to challenge a determination by the Secretary of the Treasury that certain steel I-beams from Belgium were not being sold in the United States at less than fair value. The action was brought under 19 U.S.C. 1516 (Supp. 1979) prior to its amendment by the Trade Agreements Act of 1979.

In an order of September 3, 1980 (*Connors Steel Co.* v. *United States*, 85 Cust. Ct. —— C.R.D. 80-09), the court granted plaintiff's motion for access to confidential information in the administrative record. This information consisted in part of data regarding the sales of the Belgian manufacturer of the steel in question. Access was made subject to detailed restrictions, one of which provided that only the attorneys working on the case could see the material.

Plaintiff then moved to modify the order to allow it to disclose the material to Economic Consulting Services, Inc., so that they might analyze and verify calculations made by the Department of the Treasury. At that point, S. A. Cockerill (Cockerill) and Cockerill Stinnes Steel Corp. (CSSC), who are respectively, the producer and importer of the Belgian steel in question, were granted leave to appear in opposition. They argued that consultation with economic experts was unnecessary and posed an increased hazard of inadvertent disclosure. The problem of further disclosure could probably be dealt with by appropriate protective terms and conditions but Cockerill appears to be correct in questioning whether a need exists for consultation with economic experts. On the question of access to these confidential materials, the court continues to balance the demonstrable needs of parties challenging the administrative determination and the legitimate concerns of those submitting confidential business information to the administrative agency.

At present the court does not see the need for anything beyond simple arithmetical use of the sales data of the Belgian manufacturer, and accordingly, is unwilling to modify its previous order. If, at some future time plaintiff is able to posit a reasonably complete line of argument involving the confidential data, and to demonstrate that the proper development of that line of argument requires the expertise

of economic consultants, then the court will reconsider its position. At that time the court will entertain a renewed written motion for modification with notice to Cockerill.

In the course of the hearing on this motion and in preceding papers the court has become aware of a sharp dispute regarding the scope of judicial review in this action. It is best that this matter be resolved so that the possible issues are identified as soon as possible. To this end the parties will be requested to brief the point.

It is therefore

ORDERED, that plaintiff's motion to modify the order of September 3, 1980, is denied, and it is further.

ORDERED, that within 30 days of the date of entry of this order the parties submit memorandums regarding the scope of judicial review in this action.

Judgment of the U.S. Customs Court in Appealed Case

OCTOBER 10, 1980

Appeal 79–37.—Ozen Sound Devices *v.* United States.—"TALKING MECHANISMS"—PARTS OF TOYS—PHONOGRAPHS—ELECTRICAL PARTS OF ARTICLES—TSUS—SUMMARY JUDGMENT.—C.D. 4816 affirmed May 1, 1980 (C.A.D. 1246).

Appeal to U.S. Court of Customs and Patent Appeals

Appeal 80-41.—Carlingswitch, Inc. v. United States.—SWITCHES, INDICATOR LIGHTS AND RELATED PRODUCTS—PENALTY CASE—REFUSAL TO REFUND DUTIES—EXACTION—DISMISSAL FOR LACK OF JURISDICTION—SUMMARY JUDGMENT. Appeal from C.D. 4873.

In this case plaintiff-appellant tendered $91,992.35 to Customs in connection with a penalty investigation under section 592 of the Tariff Act of 1930, as amended (19 U.S.C. 1592) for understating the value of certain shipments of switches, indicator lights, and related products. Customs refused to refund the monies tendered and plaintiff commenced an action in the Customs Court to obtain recovery. Defendant-appellee moved to dismiss the action or alternatively for summary judgment on the ground that Customs' refusal to make refund did not constitute an exaction within the meaning of section 514(a)(3) of the Tariff Act of 1930, as amended (19 U.S.C. 1514(a)(3)), and that the court therefore lacked jurisdiction. Plaintiff cross-moved for summary judgment contending that by virtue of sections 520(a)(3) of the Tariff Act of 1930, as amended (19 U.S.C. 1520(a)(3)) and 514(a)(3), Customs' refusal to refund the duties tendered amounts to an exaction within the meaning of section 514(a)(3), and that the court therefore has jurisdiction. Additionally, plaintiff moved to amend its complaint to include claims under sections 514(a)(1) and 514(a)(2) of the Tariff Act of 1930, as amended, which sections grant the court jurisdiction of denied protests covering the appraised value of merchandise and the classification and rate and amount of duties chargeable.

The Customs Court granted defendant's motion for summary judgment; denied plaintiff's cross-motion for summary judgment and amendment of its complaint; and the action was dismissed.

It is claimed that the Customs Court erred in finding and holding that appellant's deposits were made on its own initiative and without request, demand or compulsion by Customs; in not finding and holding that on May 28, 1974, appellant deposited with Customs $41,992.35 with knowledge of audit and claim of undervaluation of certain entries and the existence of a potential penalty claim being made relating to

that alleged undervaluation; in not finding and holding that on April 23, 1976, appellant deposited an additional $50,000 with knowledge of the existence of a penalty investigation being conducted; in not finding and holding that the aforementioned deposit was conditioned as shown in appellant's letter of April 23, 1976; in not finding and holding that Customs considered both of the aforementioned deposits as applicable to the entries covered by Penalty Case No. 77-2301-50045, and so applied them, depositing them in the Treasury; in not finding and holding that the alleged violation resulting in a claim for forfeiture value of the entries involved in the aforesaid penalty case was discovered no later than January 28, 1974; in finding and holding that on June 15, 1979, Customs notified appellant that although the merchandise was, through false invoices, undervalued in the amount of $174,573.21, the statute of limitations had run on January 28, 1979, on all entries and that the claim for forfeiture value was therefore remitted in its entirety; in not finding and holding that by letter dated June 21, 1979, Customs notified appellant that the claim for forfeiture value was remitted, with no reference to the statute of limitations or the amount of the alleged undervaluation; in not finding and holding that no decision on the valuation issues raised by appellant's mitigation or remission petition was made by Customs as contemplated by section 618, Tariff Act of 1930, as amended, and the Customs Regulations and Procedures relating to mitigation decisions; in not finding and holding that the District Director's administrative decision refusing to refund deposits pursuant to section 520(a)(3), Tariff Act of 1930, as amended, involved the appraised value of the merchandise in the penalty case; in not finding and holding that the District Director's administrative decision refusing to refund deposits as aforesaid involved the amount of duties chargeable on the merchandise; in not finding and holding that the aforesaid decision also involved a charge on that merchandise within the jurisdiction of the Secretary of the Treasury; in not finding and holding that the aforesaid decision also involved an exaction; in not finding and holding that appellant's deposits were money deposited in the Treasury on account of a penalty which was remitted; in not finding and holding that the Customs Court has jurisdiction to review a Customs decision under section 520(a)(3), Tariff Act of 1930, as amended; in finding and holding that *United States* v. *C. J. Tower and Sons of Buffalo, Inc.*, 61 CCPA 90, C.A.D. 1129, 499 F. 2d 1277 (1974), is irrelevant to the issues involved in this matter; in not finding and holding that the decisions in *C. J. Tower and Sons of Buffalo, Inc.*, *supra*, and *Hudson Fwdg. and Shipping Co.* v. *United States*, T.D. 46389, 63 T.D. 819 (1933), are relevant to the issues involved in this matter; in not finding and holding that Customs decisions not to refund money in penalty cases which are remitted under section 520(a)(3), supra, are

protestable under section 514, Tariff Act of 1930, as amended; in denying appellant's motion for amendment of its pleadings to include claims under sections 514(a)(1) and 514(a)(2) of the Tariff Act of 1930, as amended; in not finding and holding that the statutory authority to refund money deposited on account of a penalty is not limited to funds demanded by way of a Customs form 5555(a), notice of penalty or liquidated damages incurred and demand for payment; in granting appellee's motion for summary judgment; in denying appellant's motion for summary judgment; in dismissing this action.

Recent Unpublished Customs Service Decisions

The following listing of recent administrative decisions issued by the Office of Regulations and Rulings, U.S. Customs Service, and not otherwise published, is published for the information of Customs officers and the importing community. Although the decisions are not of sufficient general interest to warrant publication as Treasury decisions, the listing describes the issues involved and is intended to aid Customs officers and concerned members of the public in identifying matters of interest which recently have been considered by the Office of Regulations and Rulings.

A copy of any decision included in this listing, identified by its date and file number, may be obtained in a form appropriate for public distribution upon written request to the Office of Regulations and Rulings, attention: Legal Reference Area, room 2404, U.S. Customs Service, 1301 Constitution Avenue NW., Washington, D.C. 20229. These copies will be made available at a cost to the requester of 10 cents per page. However, the Customs Service will waive this charge if the total number of pages copied is 10 or less.

Decisions listed in earlier issues of the CUSTOMS BULLETIN, through July 2, 1980, are available in microfiche format at a cost of $23.85 (15 cents per sheet of fiche). It is anticipated that additions to the microfiche will be made quarterly and subscriptions are available. Requests for the microfiche now available and for subscriptions should be directed to the Legal Reference Area. Subscribers will automatically receive updates as they are issued and will be billed accordingly.

Dated: October 21, 1980.

JOHN T. ROTH,
Acting Director,
Regulations and Research Division.

Date of decision	File No.	Issue
9-12-80	104372	Vessel repair: Inapplicability of 19 U.S.C. 1466 to aircraft under foreign registry
9-19-80	104404	Carrier control: Whether a corporate aircraft is considered private or commercial for Customs purposes
9-16-80	104804	Vessels: Foreign-flag yacht brought into the United States temporarily by nonresident; dutiability
9-23-80	104819	Vessel repair: Whether work performed on a U.S.-documented vessel under a foreign shipyard warranty agreement is considered a dutiable repair under 19 U.S.C. 1466
9-12-80	104825	Instruments of international traffic: Tote bags used in the transportation of powdered phenolic resin
9-26-80	104840	Instruments of international traffic: Collapsible rubber tanks used to transport apple juice concentrate
9-17-80	104845	Carrier control: Whether containment and disposal of oil spill by a cleanup vessel within U.S. waters is coastwise trade
9-16-80	104859	Carrier control: Whether coastwise voyage is terminated by offer for sale of non-coastwise-qualified vessel's cargo abroad
9-18-80	104867	Carrier control: Whether storage of Alaskan North Slope crude oil in a foreign-flag carrier in the Gulf of Mexico is prohibited by coastwise law
9-10-80	104870	Carrier control: Inapplicability of 46 U.S.C. 883 to vessels in distress
2-13-80	541913	Valuation: Whether a royalty fee payment to the manufacturer of imported merchandise is dutiable
8- 9-80	713311	Entry: Whether a foreign-registered civil aircraft leased to a U.S. air carrier for use in the latter's operation in the United States is entitled to duty-free entry under the Civil Aircraft Agreement
10- 1-80	713449	Exemptions: Household effects used abroad for a period not less than 1 year; submission of supporting evidence
10- 2-80	714309	In-bond: Permissibility of placing in-bond merchandise in a container station
9-18-80	060504	Classification: Denture sealant (495.15)
9-18-80	060748	Classification: Frozen rabbit meat; rabbit blood and brains (106.55, 106.70, 106.75, 191.18)
10- 8-80	060892	Classification: Cheese (117.88)
9-12-80	061541	Valuation: Whether certain expenditures for research and development incurred by an importer are dutiable assists
9- 8-80	061735	American selling price: Man's closed-toe, closed-back, slip-on casual shoe with medium wedge and macrame upper (700.60)
9- 8-80	061942	American selling price: Child's protective boot (700.60)
3-13-80	062813	Classification: Van-bus combinations (692.02, 692.04, 692.20)

Date of decision	File No.	Issue
10- 1-80	062933	Classification: Lawnmowers, tillers, tiller-tractors, parts and accessories (389.62, 642.20, 652.33, 652.35, 666.00, 666.10, 683.60, 692.34, 772.50)
9-23-80	062993	Classification: Coir yarn (305.02)
9-18-80	064055	Classification: Roasted kibbled carob (193.25)
10- 2-80	064235	Classification: Men's valet-type jewelry box (204.40, 204.50)
9- 7-80	064308	Classification: Crawler tractor (664.08, 692.34, 692.35)
9-18-80	064393	Classification: Fiber-optic table lamps (653.39)
9- 8-80	064391	Classification: Whether a battery soldered into an imported calculator is separately classifiable or considered an entirety with the calculator
9-15-80	064500	Classification: Papier mache Santa Claus and pixies (737.22)
10- 1-80	064518	Classification: Automobile ski rack (657.25, 657.40, 774.55)
7-24-80	064700	Classification: Edible preparation made from ingredients of U.S. origin (146.44, 183.05)
9-18-80	064746	Classification: Cleaning machine (678.50)
9-18-80	064841	Classification: Sweetener (155.20)
9-18-80	064887	Classification: Multicolored ball of plush material (735.12)
10- 8-80	064890	Classification: Raised access floor system (207.00, 657.25, 774.55)
9-18-80	064934	Classification: Igniter cord connector (657.35)
9- 7-80	064966	Classification: Press die controller (674.56)
9-15-80	064979	Classification: Sweaters (380.00)
10- 1-80	065057	Classification: Batting gloves (734.56, 734.77, 735.07)
9-16-80	065121	Classification: Watch display cases (204.50, 389.50)
9-15-80	065158	American selling price: Women's cotton footwear (700.60)
10- 8-80	065256	Classification: Miniature jukebox (725.50, 737.95)
10- 8-80	065268	Classification: Whether manufacturer's label ornaments women's trousers (382.00)
10- 1-80	065282	Classification: Polypropylene netting for coil dialysers (338.30, 661.95, 771.42, 774.55)
10- 8-80	065372	American selling price: Casual shoe with corduroy upper and plastic/rubber sole (700.60)
9-18-80	065396	Classification: Whether an article is a music box or a toy (725.50, 737.80)
10- 8-80	065400	American selling price: Sandal with medium wedge and canvas upper (700.60)
10- 8-80	066004	Classification: Breather element shell for car engine filter (660.67)
9-16-80	066042	Classification: Fireplace logs in part of slack wax (521.31, 792.32, 799.00)

Date of decision	File No.	Issue
9- 7-80	066123	Classification: Whether a change in the basis of appraisement from a value other than American selling price (ASP) to an appraisement based on the ASP of a domestically produced competitive product constitutes a change of practice
10- 8-80	066163	Classification: Battery-operated lantern featuring fluorescent lamp, spotlight, signal tube, and blinker (683.80, 688.45)
10- 8-80	066188	Classification: Aluminum food containers (640.25)
9-15-80	066211	Classification: Paperweight with metric markings (710.72)
10- 8-80	066263	Classification: Umbrella hat (703.15)
10- 1-80	066290	Classification: Cherry juice (165.55)
10- 8-80	066347	Classification: Whey protein concentrates (183.05)
9-18-80	066414	Classification: Iron barbells (735.20)
10- 7-80	066458	Classification: Scraper to be towed by dozer (664.08)
10- 8-80	066550	Classification: Candleholders of brass (653.37)

International Trade Commission Notices

Investigations by the U.S. International Trade Commission

DEPARTMENT OF THE TREASURY,
October 22, 1980.

The appended notices relating to investigations by the U.S. International Trade Commission are published for the information of Customs officers and others concerned.

R. F. CHASEN,
Commissioner of Customs.

In the Matter of CERTAIN HEADNOTES AND PAPERMAKING MACHINE FORMING SECTIONS FOR THE CONTINUOUS PRODUCTION OF PAPER, AND COMPONENTS THEREOF	Investigation No. 337-TA-82

Notice of Termination

Upon consideration of the recommendation of the presiding officer and the record developed in this proceeding, the Commission has granted motion docket No. 82-12 and has ordered that investigation No. 337-TA-82 be terminated as to U.S. Letters Patent 3,876,498 effective October 10, 1980.

Any party wishing to petition for reconsideration of the Commission's action must do so within 14 days of service of the order. Such petitions must comply with the requirements of section 210.56 of the Commission's Rules of Practice and Procedure (19 CFR 210.56).

Copies of the Commission's action and order as well as all other public documents of record in this investigation are available to the public and may be obtained during official working hours (8:45 a.m.

to 5:15 p.m.) from the Office of the Secretary, U.S. International Trade Commission, 701 E Street NW., Washington, D.C. 20436; 202-523-0161.

Notice of the institution of this investigation was published in the Federal Register of April 8, 1980 (43 F.R. 23832).

By order of the Commission.

Issued: October 10, 1980.

KENNETH R. MASON,
Secretary.

In the Matter of CERTAIN HEADBOXES AND PAPERMAKING MACHINE FORMING SECTIONS FOR THE CONTINUOUS PRODUCTION OF PAPER, AND COMPONENTS THEREOF	Investigation No. 337-TA-82

Notice of Termination

Upon consideration of the recommendation of the presiding office and the record developed in this proceeding, the Commission has granted motion docket No. 82-15 and has ordered that investigation No. 337-TA-82 be terminated as to respondent Fort Howard Paper Co., effective as of October 10, 1980.

Any party wishing to petition for reconsideration of the Commission's action must do so within 14 days of service of the order. Such petitions must comply with the requirements of section 210.56 of the Commission's Rules of Practice and Procedure (19 CFR 210.56).

Copies of the Commission's action and order as well as all other public documents of record in this investigation are available to the public and may be obtained during official working hours (8:45 a.m. to 5:15 p.m.) from the Office of the Secretary, U.S. International Trade Commission, 701 E Street NW., Washington, D.C. 20436; 202-523-0161.

Notice of the institution of this investigation was published in the Federal Register of April 8, 1980 (43 F.R. 23832).

By order of the Commission.

Issued: October 10, 1980.

KENNETH R. MASON,
Secretary.

In the Matter of CHLOROFLUOROHYDROCARBON DRY-CLEANING PROCESS, MACHINES AND COMPONENTS THEREFOR	Investigation No. 337-TA-84

Notice of Addition of Two Parties Respondent

AGENCY: U.S. International Trade Commission.

ACTION: Addition of two parties respondent: Union S.R.L., Via Marzabotto, 40050 Via dia Argelato, Bologna, Italy and United Tex-Care Co., 8505 Whitfield Park Loop, Sarasota, Fla. 33580.

EFFECTIVE DATE: October 8, 1980.

AUTHORITY: The authority for Commission disposition of the subject motion is contained in section 337 of the Tariff Act of 1930 (19 U.S.C. 1337) and in 19 CFR 210.22.

SUPPLEMENTARY INFORMATION: Upon receipt of a complaint filed by Research Development Co. of Minneapolis, Minn., the U.S. International Trade Commission instituted an investigation on April 17, 1980, to determine whether there is a violation of section 337(a) of the Tariff Act of 1930 (19 U.S.C. 1337(a)) in the importation into the United States of chlorofluorohydrocarbon drycleaning machines, or in their sale, by reason of the alleged infringement of claims 1, 3, and 4 of U.S. Letters Patent 3,728,074, the effect or tendency of which is to destroy or substantially injure an industry, efficiently and economically operated, in the United States. Notice of the Commission's investigation was published in the Federal Register of June 11, 1980 (45 F.R. 39580).

On August 18, 1980, the complainant filed motion 84-4 to amend the complaint and notice of investigation by addition of two new parties respondent: Union S.R.L. and United Tex-Care Co. On September 26, 1980, the motion was certified to the Commission by the presiding officer, who recommended that the motion be granted.

Copies of the Commission's action and order and all other nonconfidential documents filed in connection with this investigation are available for inspection during official business hours (8:45 a.m. to 5:15 p.m.) in the Office of the Secretary, U.S. International Trade Commission, 701 E Street NW., Washington, D.C. 20436; 202-523-0161.

FOR FURTHER INFORMATION CONTACT: Jack Simmons, Office of the General Counsel, U.S. International Trade Commission; 202-523-0493.

By order of the Commission.

Issued: October 10, 1980.

KENNETH R. MASON,
Secretary.

In the Matter of CERTAIN FOOD SLICERS AND COMPONENTS THEREOF	Investigation No. 337-TA-76

Notice of Denial of Motion to Terminate Respondent Albert E. Price, Inc. and Remand of Proposed Consent Order Agreement

AGENCY: U.S. International Trade Commission.

ACTION: Having determined that this matter is properly before the Commission and having reviewed the record in this investigation, including the recommendation of the presiding officer and the joint motion to terminate (motion docket No. 76-1), and papers in support thereof, the Commission has voted to deny the joint motion to terminate Albert E. Price, Inc., as respondent in investigation No. 337-TA-76, and remanded the proposed consent order agreement to the presiding officer for revision. The Commission believes that the consent order agreement is defective in that: (1) it fails to specify that the food slicers presently under investigation are prohibited from importation and sale in the United States; and (2) it lacks a provision waiving all rights to seek judicial review or otherwise challenge or contest the validity of the consent order.

EFFECTIVE DATE: October 10, 1980.

FOR FURTHER INFORMATION CONTACT: Warren H. Maruyama, Office of the General Counsel, U.S. International Trade Commission, 701 E Street NW., Washington, D.C. 20436; 202-523-0143.

SUPPLEMENTARY INFORMATION:

BACKGROUND

This investigation, under section 337 of the Tariff Act of 1930, concerns alleged infringement of claim 7 of U.S. Letters Patent 3,766,817 by respondents E. Mishan & Sons, Albert E. Price, Inc., Crest Industries Corp., and Taiwan Timing Trading Co. The Commission instituted investigation No. 337-TA-76 on December 4, 1979, and published notice thereof in the Federal Register on December 21, 1979 (44 F.R. 75733).

On March 21, 1980, complainant Prodyne Enterprises, Inc., respondent Albert E. Price, Inc., and the Commission investigative attorney filed a joint motion to terminate the investigation as to Price, and submitted a proposed consent order agreement to the presiding officer. The presiding officer certified the consent order agreement to the Commission on May 7, 1980, and certified her recommendation that the proposed consent order be rejected on June 24, 1980. The Commission published notice of the motion to terminate the investigation as to respondent Price in the Federal Register on July 16, 1980,

for public comment (45 F.R. 47770), and, in addition, requested comments from Government agencies pursuant to 19 CFR, section 210.14(a)(2).

Pursuant to 19 CFR, section 210.51(a), the Commission has denied the joint motion to terminate respondent Price (motion 76–1), and has remanded the proposed consent order agreement to the presiding officer.

RECONSIDERATION

Any party wishing to petition for reconsideration of the Commission's action must do so within 14 days of service of the Commission order. Such petitions must be in accord with Commission rule 210.56 (19 CFR, sec. 210.56).

ADDITIONAL INFORMATION

Copies of the Commission's order and opinion and any other public documents in this investigation are available to the public during official working hours (8:45 a.m. to 5:15 p.m.) in the Office of the Secretary, U.S. International Trade Commission, 701 E Street NW., Washington, D.C. 20436; 202–523–0161.

By order of the Commission.

Issued: October 14, 1980.

KENNETH R. MASON,
Secretary.

In the Matter of CERTAIN AIRTIGHT CAST-IRON STOVES	Investigation No. 337–TA–69

Rejection of Consent Order Agreement

AGENCY: U.S. International Trade Commission.

ACTION: Rejection of consent order agreement submitted in investigation No. 337–TA–69, Certain Airtight Cast-Iron Stoves.

SUMMARY: Notice is hereby given that motions No. 69–23, 69–28, and 69–30 have been denied by the Commission. The administrative law judge in this investigation had previously recommended that the consent order agreements be rejected (orders No. 69–27, 69–31, and 69–32). Interested persons may obtain copies of the administrative law judge's recommendation, the Commission's order and opinion (and all other public documents) by contacting the Office of the Secretary to the Commission, 701 E Street NW., Washington, D.C. 20436.

FOR FURTHER INFORMATION CONTACT: Jeffrey S. Neeley, Office of the General Counsel, U.S. International Trade Commission,

701 E Street NW., Washington, D.C. 20436; telephone 202-523-0359.

By order of the Commission.

Issued: October 15, 1980.

KENNETH R. MASON,
Secretary.

In the Matter of CERTAIN APPARATUS FOR THE CONTINUOUS PRODUCTION OF COPPER ROD	Investigation No. 337-TA-89

Denial of Three Motions, Granting of One Motion

On October 15, 1980, the Commission voted to deny (1) Krupp's motion to admit additional evidence or to remand to the administrative law judge; (2) Southwire's motion to strike Krupp respondents' prehearing brief; and (3) Southwire's objection to the appearance of Phelps Dodge Corp. The Commission also voted to grant Southwire's motion to substitute exhibits.

Copies of the Commission's action and order and any other public documents in this investigation are available to the public during official working hours (8:45 a.m. to 5:15 p.m.) in the Office of the Secretary, U.S. International Trade Commission, 701 E Street NW., Washington, D.C. 20436; telephone 201-523-0161.

By order of the Commission.

Issued: October 16, 1980.

KENNETH R. MASON,
Secretary.

Investigation No. 22-42

PEANUTS, SHELLED OR NOT SHELLED, BLANCHED, OR OTHERWISE PREPARED OR PRESERVED (EXCEPT PEANUT BUTTER)

Notice of Investigation and Hearing

AGENCY: U.S. International Trade Commission.

ACTION: Institution of an investigation under section 22(d) of the Agricultural Adjustment Act (7 U.S.C. 624) to determine whether changed circumstances exist which require the modification or suspension of the section 22 quantitative import restriction on peanuts,

set forth in item 951.00 [1] of the Appendix to the Tariff Schedules of the United States, for the 12-month quota period beginning August 1, 1980. Specifically, the Commission instituted the investigation under section 22(d) to determine whether the annual import quota for the 12-month period beginning August 1, 1980, may be modified or suspended without rendering or tending to render ineffective, or materially interfering with, any program or operation undertaken by the Department of Agriculture with respect to peanuts, or reducing substantially the amount of any product processed in the United States from peanuts.

EFFECTIVE DATE: October 15, 1980.

FOR FURTHER INFORMATION CONTACT: Mr. Stephen D. Burket; 202-523-0033.

SUPPLEMENTARY INFORMATION:

BACKGROUND

Since July 1, 1953, U.S. imports of peanuts have been subject to an annual quota (beginning on Aug. 1 of each year) of 1,709,000 pounds (aggregate quantity, shelled basis). This quota was imposed, based on a U.S. Tariff Commission (now the U.S. International Trade Commission) finding, as a result of an investigation under section 22 of the Agricultural Adjustment Act of 1933. In 1955 and 1956, as a result of actions taken under section 22(d) of that act, the import quota was temporarily relaxed to allow for imports in excess of the quota in order to relieve shortages of certain types of peanuts in the United States.

The current investigation (No. 22-42) is being instituted following receipt on October 1, 1980, of a petition filed by counsel on behalf of the Peanut Butter and Nut Processors Association and the National Confectioners Association requesting that the Commission make such an investigation under section 22(d), and alleging that because of severe drought conditions in producing areas in the United States and a resultant decline in U.S. production of peanuts, it is urgent that action be taken to suspend entirely the import restriction for the current quota period.

AUTHORITY

Section 22(d) of the Agricultural Adjustment Act provides that:

> After investigation, report, finding, and declaration in the manner provided in the case of a proclamation issued pursuant to

[1] Item 951.00 provides that whenever, in any 12-month period beginning Aug. 1 in any year, an aggregate quantity of 1,709,000 pounds (shelled basis) of peanuts, shelled or not shelled, blanched, or otherwise prepared or preserved (except peanut butter) provided for in TSUS items 145.20, 145.21, and 145.48 (part 9A, schedule 1) has been entered, no such products may be entered during the remainder of such period. Peanuts in the shell are charged against the quota on the basis of 75 pounds for each 100 pounds of peanuts in the shell.

subsection (b) of this section, any proclamation or provision of such proclamation may be suspended or terminated by the President whenever he finds and proclaims that the circumstances requiring the proclamation or provision thereof no longer exist or may be modified by the President whenever he finds and proclaims that changed circumstances require such modification to carry out the purposes of this section.

This investigation will be subject to the provisions of part 204 of the Commission's Rules of Practice and Procedure (19 CFR 204).

PUBLIC HEARING: The Commission will hold a public hearing in connection with this investigation beginning at 10 a.m., e.s.t., Monday, December 1, 1980, in the hearing room of the U.S. International Trade Commission Building, 701 E Street NW., Washington, D.C. Requests to appear at the hearing should be filed in writing with the Secretary to the Commission not later than the close of business (5:15 p.m., e.s.t.), November 24, 1980. All persons desiring to appear at the hearing and make oral presentations should attend a prehearing conference to be held at 2:30 p.m., e.s.t., on November 25, 1980, in room 117 at the U.S. International Trade Commission Building. For further information concerning the conduct of the investigation, hearing procedures, and rules of general application, consult the Commission's Rules of Practice and Procedure, part 204 (19 CFR 204) and part 201 (19 CFR 201).

WRITTEN SUBMISSIONS: In addition to or in lieu of an appearance at the hearing, interested persons may submit to the Commission a written statement of information pertinent to the subject matter of this investigation. Written statements should be addressed to the Secretary to the Commission, 701 E Street NW., Washington, D.C. 20436, and must be received not later than December 10, 1980. All written submissions, except for confidential business data, will be available for public inspection.

Any business information which a submitter desires the Commission to treat as confidential shall be submitted separately and each sheet must be clearly marked at the top "Confidential business data." Confidential submissions must conform with the requirements of section 201.6 of the Commission's Rules of Practice and Procedure (19 CFR 201.6). All written submissions, except for confidential business data, will be available for public inspection.

By order of the Commission.

Issued: October 16, 1980.

KENNETH R. MASON,
Secretary.

731-TA-35 (Preliminary)

Portable Electric Nibblers From Switzerland

Notice of Institution of Preliminary Antidumping Investigation and Scheduling of Conference

AGENCY: U.S. International Trade Commission.

ACTION: Institution of preliminary antidumping investigation to determine whether there is a reasonable indication that an industry in the United States is materially injured, or is threatened with material injury, or the establishment of an industry is materially retarded, by reason of imports from Switzerland of hand-directed or hand-controlled nibblers with self-contained electric motors, provided for in item 683.20 of the Tariff Schedules of the United States (TSUS), sold or likely to be sold at less than fair value.

EFFECTIVE DATE: October 16, 1980.

FOR FURTHER INFORMATION CONTACT: Daniel Leahy, Senior Investigator; 202-523-1369.

SUPPLEMENTARY INFORMATION:

BACKGROUND

This investigation is being instituted following receipt of a petition on October 7, 1980, filed by the Widder Corp., Naugatuck, Conn., on behalf of the domestic industry producing portable electric nibblers. The petition alleged sales at less than fair value (LTFV) of portable electric nibblers produced in Switzerland.

AUTHORITY

Section 733(a) of the Tariff Act of 1930 (19 U.S.C. 1673(a)) requires the Commission to make a determination of whether there is a reasonable indication that an industry in the United States is materially injured, or is threatened with material injury, or the establishment of an industry in the United States is materially retarded, by reason of imports alleged to be, or likely to be, sold in the United States at less than fair value. Such a determination must be made within 45 days after the date on which a petition is filed under section 732(b) or on which notice is received from the Department of Commerce of an investigation commenced under 732(a). Accordingly, the Commission, on October 16, 1980, instituted preliminary antidumping investigation No. 731-TA-35. This investigation will be subject to the provisions of part 207 of the Commission's Rules of Practice and Procedure (19 CFR 207, 44 F.R. 76457) and particularly, subpart B thereof.

WRITTEN SUBMISSIONS

Any person may submit to the Commission on or before November 3, 1980, a written statement of information pertinent to the subject matter of this investigation. A signed original and 19 copies of such statements must be submitted.

Any business information which a submitter desires the Commission to treat as confidential shall be submitted separately and each sheet must be clearly marked at the top "Confidential business data." Confidential submissions must conform with the requirements of section 201.6 of the Commission's Rules of Practice and Procedure (19 CFR 201.6). All written submissions, except for confidential business data, will be available for public inspection.

CONFERENCE

The Director of Operations of the Commission has scheduled a conference in connection with this investigation for 10 a.m., e.s.t., on October 29, 1980, at the U.S. International Trade Commission Building, 701 E. Street NW., Washington, D.C. Parties wishing to participate in the conference should contact the senior investigator for the investigation, Mr. Daniel Leahy; 202-523-1369. It is anticipated that parties in support of the petition for antidumping duties and parties opposed to such petition will each be collectively allocated 1 hour within which to make an oral presentation at the conference. Further details concerning the conduct of the conference will be provided by the senior investigator.

INSPECTION OF PETITION

The petition filed in this case is available for public inspection at the Office of the Secretary, U.S. International Trade Commission.

By order of the Commission.

Issued: October 17, 1980.

KENNETH R. MASON,
Secretary.

Index

U.S. Customs Service

Treasury decisions:

	T.D. No.
Adding Netherlands Antilles to list of nations	80-255
Carrier bonds	80-254
Country-of-origin marking—People's Republic of China and Taiwan	80-253
Foreign currencies:	
Daily certified rates; October 6-10, 1980	80-256
Rates which varied from quarterly rate; Sept. 30, 1980	80-257
Personal Declarations and Exemptions, Amend Sec. 148.65	

Customs Court

Administrative:

Injury determination; Canadian sugar dumping investigation, C.R.D. 80-16

Record; judicial review, C.R.D. 80-16

Appeal to U.S. Court of Customs and Patent Appeals (p. —);

Appeal 80-41—Switches, indicator lights and related products; penalty case; refusal to refund duties; exaction; dismissal for lack of jurisdiction; summary judgment

Belgium steel beams; not less than fair value determination, C.R.D. 80-17

Canadian sugar dumping investigation; administrative injury determination C.R.D. 80-16

Confidential information; disclosure, C.R.D. 80-17

Construction:

Tariff Act of 1930, sec. 516A(2)(A), C.R.D. 80-15

U.S. Code, title 19:

Sec. 1516 (Supp. 1979) C.R.D. 80-17

Sec. 1516a(b)(1)(B), C.R.D. 80-16

Countervailing duty investigation; dextrines and soluble or chemically treated starches, C.R.D. 80-15

Dextrines and soluble or chemically treated starches; countervailing duty investigation, C.R.D. 80-15

Disclosure; confidential information, C.R.D. 80-17

Discovery; interrogatories, C.R.D. 80-16

Documents:

Governmental privilege, C.R.D. 80-15

"Pro and con" statements, C.R.D. 80-15

Final negative determination; International Trade Commission, C.R.D. 80-15

Governmental privilege; documents, C.R.D. 80-15

International Trade Commission; final negative determination, C.R.D. 80-51

Interrogatories:

Discovery, C.R.D. 80-16

Where permitted; review on the record, C.R.D. 80-16

Judgment in appealed case (p. —);
Appeal 79-37—"Talking mechanisms"; parts of toys; phonographs; electrical parts of articles; TSUS; summary judgment
Judicial review; administrative record, C.R.D. 80-16
Memorandum opinion and order:
Motion to modify order denied, C.R.D. 80-17
Protective order, motion for, C.R.D.'s 80-15, 80-16
Motion for protective order granted, C.R.D. 80-16
Statements, "pro and con", C.R.D. 80-15
Motion to modify order denied; memorandum opinion and order, C.R.D. 80-17
Not less than fair value determination; Belgium steel beams, C.R.D. 80-17
Order, motion to modify, C.R.D. 80-17
"Pro and con" statements; documents, C.R.D. 80-15
Protective order;
Motion for; memorandum opinion and order, C.R.D.'s 80-15, 80-16
Privileged document, C.R.D. 80-15
Privileged document; protective order, C.R.D. 80-15
Review on the record; interrogatories, where permitted, C.R.D. 80-16
Statements, "pro and con"; motion for protective order granted, C.R.D. 80-15

NOV 14 1980
Item 950-D
T 1.11/3:14/46

Customs Bulletin

Regulations, Rulings, Decisions, and Notices concerning Customs and related matters

and Decisions

of the United States Court of Customs and Patent Appeals and the United States Customs Court

9247
N.H.

Vol. 14 NOVEMBER 12, 1980 No. 46

This issue contains

T.D. 80–258 through 80–264
Proposed Rulemaking
C.S.D. 80–201 through 80–225
C.D. 4877
Protest abstracts P80/156 through P80/157
Reap. abstracts R80/297 through R80/302
International Trade Commission Notices

THE DEPARTMENT OF THE TREASURY
U.S. Customs Service

NOTICE

The abstracts, rulings, and notices which are issued weekly by the U.S. Customs Service are subject to correction for typographical or other printing errors. Users may notify the U.S. Customs Service, Logistics Management Division, Washington, D.C. 20229, of any such errors in order that corrections may be made before the bound volumes are published.

For sale by the Superintendent of Documents, U.S. Government Printing Office, Washington, D.C. 20402. Price: $2.25 (single copy domestic); $2.85 (single copy foreign). Subscription price: $85.00 a year domestic; $106.25 a year foreign.

U.S. Customs Service

Treasury Decisions

(T.D. 80-258)

Cotton and Manmade Fiber Textile Products—Restriction on Entry

Restriction on entry of cotton and manmade fiber textile products manufactured or produced in Sri Lanka

There is published below a directive of September 9, 1980, received by the Commissioner of Customs from the chairman, Committee for the Implementation of Textile Agreements, concerning restriction on entry of cotton and manmade fiber textile products in various categories manufactured or produced in the Sri Lanka.

This directive was published in the Federal Register on September 12, 1980 (45 F.R. 60465), by the committee.

(QUO-2-1)

Dated: October 23, 1980.

WILLIAM D. SLYNE
(For Richard R. Rosettie, Acting Director, Duty Assessment Division).

U.S. DEPARTMENT OF COMMERCE,
INTERNATIONAL TRADE ADMINISTRATION,
Washington, D.C., September 9, 1980.

Committee for the Implementation of Textile Agreements

COMMISSIONER OF CUSTOMS,
Department of the Treasury,
Washington, D.C.

DEAR MR. COMMISSIONER: Under the terms of the Arrangement Regarding International Trade in Textiles done at Geneva on December 20, 1973, as extended on December 15, 1977; pursuant to the Bilateral Cotton, Wool and Man-Made Fiber Textile Agreement of July 7, 1980, between the Governments of the United States and Sri

Lanka; and in accordance with the provisions of Executive Order 11651 of March 3, 1972, as amended by Executive Order 11951 of January 6, 1977, you are directed to prohibit, effective on September 15, 1980, and for the 12-month period beginning on May 1, 1980, and extending through April 30, 1981, entry into the United States for consumption and withdrawal from warehouse for consumption of cotton and manmade fiber textile products in categories 331, 335, 340, 341, 348, 640, and 641 in excess of the following levels of restraint:

Category	*12-month levels of restraint* [1]	
331	700,000	dozen pairs
335	100,000	dozen
340/341/640/641	1,150,000	dozen of which not more than 350,000 dozen shall be in category 340; not more than 360,000 dozen shall be in category 341; not more than 80,000 dozen shall be in category 640; and not more than 360,000 dozen shall be in category 641.
348	200,000	dozen

In carrying out this directive, entries of cotton and manmade fiber textile products in the foregoing categories produced or manufactured in Sri Lanka, that have been exported to the United States before May 1, 1980, shall not be subject to this directive.

Cotton and manmade fiber textile products in the foregoing categories that have been released from the custody of the U.S. Customs Service under the provisions of 19 U.S.C. 1448(b) or 1484(a)(1)(A) prior to the effective date of this directive shall not be denied entry under this directive.

The levels set forth above are subject to adjustment in the future according to the provisions of the bilateral agreement of July 7, 1980, between the Governments of the United States and Sri Lanka, which provide, in part, that: (1) Specific limits may be exceeded by not more than 7 percent of their square yards equivalent total in any agreement period and sublimits of specific ceilings may be exceeded by not more than 10 percent within the overall specific limit; (2) specific limits may be increased for carryover and carryforward up

[1] The levels of restraint have not been adjusted to reflect any entries after Apr. 30, 1980.

to 11 percent of the applicable category limit or sublimit; and (3) administrative arrangements or adjustments may be made to resolve minor problems arising in the implementation of the agreement. Any appropriate adjustments under the provisions of the bilateral agreement, referred to above, will be made to you by letter.

A detailed description of the textile categories in terms of TSUSA numbers was published in the Federal Register on February 28, 1980 (45 F.R. 13172), as amended on April 23, 1980 (45 F.R. 27463), and August 12, 1980 (45 F.R. 53506).

In carrying out the above directions, entry into the United States for consumption shall be construed to include entry for consumption into the Commonwealth of Puerto Rico.

The actions taken with respect to the Government of Sri Lanka and with respect to imports of cotton and manmade fiber textile products from Sri Lanka have been determined by the Committee for the Implementation of Textile Agreements to involve foreign affairs functions of the United States. Therefore, the directions to the Commissioner of Customs, which are necessary for the implementation of such actions, fall within the foreign affairs exception to the rulemaking provisions of 5 U.S.C. 553. This letter will be published in the Federal Register.

Sincerely,

PAUL T. O'DAY,
Chairman, Committee for the Implementation of Textile Agreements.

(T.D. 80-259)

Customs Approved Public Gauger

Approval of public gauger performing gauging under standards and procedures required by Customs

Notice is hereby given pursuant to the provisions of section 151.43 of the Customs Regulations (19 CFR 151.43) that the application of W. B. Bransom & Co., Inc., P.O. Box 1577, Pasadena, Tex. 77501, to gauge imported petroleum and petroleum products in all Customs districts in accordance with the provisions of section 151.43 of the Customs Regulations is approved.

Dated: October 23, 1980.

SALVATORE E. CARAMAGNO,
(For the Director, Office of Regulations and Rulings).

(T.D. 80-260)

Foreign Currencies—Daily Rates For Countries Not on Quarterly List

Rates of exchange based on rates certified to the Secretary of the Treasury by the Federal Reserve Bank of New York for the Brazil cruzeiro, People's Republic of China yuan, Hong Kong dollar, Iran rial, Philippines peso, Singapore dollar, Thailand baht (tical), and Venezuela bolivar

The Federal Reserve Bank of New York, pursuant to section 522(c), Tariff Act of 1930, as amended (31 U.S.C. 372 (c)), has certified buying rates for the dates and foreign currencies shown below. The rates of exchange, based on these buying rates, are published for the information and use of Customs officers and others concerned pursuant to part 159, subpart C, Customs Regulations (19 CFR 159, subpart C).

Brazil cruzeiro:	
October 13, 1980	Holiday
October 14–17, 1980	$0.0171
People's Republic of China yuan:	
October 13, 1980	Holiday
October 14–17, 1980	$0.676727
Hong Kong dollar:	
October 13, 1980	Holiday
October 14, 1980	$0.200040
October 15, 1980	.199760
October 16, 1980	.199541
October 17, 1980	.199263
Iran rial:	
October 13–17, 1980	Not available
Philippines peso:	
October 13, 1980	Holiday
October 14–17, 1980	$0.1338
Singapore dollar:	
October 13, 1980	Holiday
October 14, 1980	$0.477099
October 15, 1980	.480077
October 16, 1980	.480654
October 17, 1980	.479846
Thailand baht (tical):	
October 13, 1980	Holiday
October 14–17, 1980	$0.0488

Venezuela bolivar:

October 13, 1980	Holiday
October 14–16, 1980	$0.2330
October 17, 1980	.2328

(LIQ-3-01 O:C:E)

Dated: October 17, 1980.

NANCY I. BROWN,
Chief, Customs Information Exchange.

(T.D. 80-261)

Foreign Currencies—Variances from Quarterly Rate

The following rates of exchange are based upon rates certified to the Secretary of the Treasury by the Federal Reserve Bank of New York, pursuant to section 522(c), Tariff Act of 1930, as amended (31 U.S.C. 372(c)), and reflect variances of 5 per centum or more from the quarterly rate published in T.D. 80-249 for the following countries. Therefore, as to entries covering merchandise exported on the dates listed, whenever it is necessary for Customs purposes to convert such currency into currency of the United States, conversion shall be at the following rates.

Sri-Lanka rupee:

October 14–16, 1980	$0.058480
October 17, 1980	.058824

(LIQ-3-01 O:C:E)

Dated: October 17, 1980.

NANCY I. BROWN,
Chief, Customs Information Exchange.

(T.D. 80-262)

Foreign Currencies—Daily Rates For Countries Not on Quarterly List

Rates of exchange based on rates certified to the Secretary of the Treasury by the Federal Reserve Bank of New York for the Brazil cruzeiro, People's Republic of China yuan, Hong Kong dollar, Iran rial, Philippines peso, Singapore dollar, Thailand baht (tical), and Venezuela bolivar

The Federal Reserve Bank of New York, pursuant to section 522(c), Tariff Act of 1930, as amended (31 U.S.C. 372(c)), has certified buying rates for the dates and foreign currencies shown below. The rates of exchange, based on these buying rates, are published for the

information and use of Customs officers and others concerned pursuant to part 159, subpart C, Customs Regulations (19 CFR 159, subpart C).

Brazil cruzeiro:	
October 20–21, 1980	$0.0171
October 22–24, 1980	.0167
People's Republic of China yuan:	
October 20–21, 1980	$0.674036
October 22–24, 1980	.671366
Hong Kong dollar:	
October 20, 1980	$0.198649
October 21, 1980	.198295
October 22, 1980	.198196
October 23, 1980	.198314
October 24, 1980	.197609
Iran rial:	
October 20–24, 1980	Not available
Philippines peso:	
October 20–24, 1980	$0.1338
Singapore dollar:	
October 20, 1980	$0.478927
October 21, 1980	.479157
October 22, 1980	.481928
October 23, 1980	.481232
October 24, 1980	.480654
Thailand baht (tical):	
October 20–24, 1980	$0.0488
Venezuela bolivar:	
October 20–24, 1980	$0.2328

(LIQ-3-01 O:C:E)

Dated: October 24, 1980.

NANCY I. BROWN,
Chief, Customs Information Exchange.

(T.D. 80–263)

Foreign Currencies—Variances from Quarterly Rate

The following rates of exchange are based upon rates certified to the Secretary of the Treasury by the Federal Reserve Bank of New York, pursuant to section 522(c), Tariff Act of 1930, as amended (31 U.S.C. 372(c)), and reflect variances of 5 per centum or more from the quarterly rate published in T.D. 80–249 for the following countries. Therefore, as to entries covering merchandise exported

on the dates listed, whenever it is necessary for Customs purposes to convert such currency into currency of the United States, conversion shall be at the following rates.

Sri Lanka rupee:

October 20–23, 1980	$0.058824
October 24, 1980	.058140

(LIQ-3-01 O:C:E)

Dated: October 24, 1980.

NANCY I. BROWN,
Chief, Customs Information Exchange.

(T.D. 80-264)

Entry and Clearance of Aircraft Proceeding Between the United States and Cuba; Part 6, Customs Regulations, Amended

TITLE 19—CUSTOMS DUTIES

CHAPTER I—U.S. CUSTOMS SERVICE

PART 6—AIR COMMERCE REGULATIONS

AGENCY: U.S. Customs Service, Department of the Treasury.

ACTION: Final rule.

SUMMARY: In a document published as T.D. 80-116, in the Federal Register on May 1, 1980 (45 F.R. 29247), the Customs Regulations were amended on an interim basis, effective April 29, 1980, to provide: (1) That aircraft clearing the United States for, or entering the United States from, Cuba, obtain permission to depart from or enter at the Fort Lauderdale-Hollywood Airport, Fort Lauderdale, Fla.; and (2) procedures to be followed by pilots clearing or entering there. As stated in the document, the amendment was made to provide for the safe and expeditious transportation of persons between Cuba and the United States.

The notice advised the public that written comments received on or before June 2, 1980, would be considered in determining whether any change to the regulation would be required before a final rule was published. No comments were received in response to the notice and Customs has determined that the regulation does not require alteration. Accordingly, it is being published as a final rule.

EFFECTIVE DATE: April 29, 1980.

FOR FURTHER INFORMATION CONTACT: John Mathis, Carriers, Drawback and Bonds Division, U.S. Customs Service, 1301 Constitution Avenue NW., Washington, D.C. 20229; 202-566-5706.

331-468 O - 80 - 2

DRAFTING INFORMATION

The principal author of this document was Lawrence P. Dunham, Regulations and Research Division, Office of Regulations and Rulings, U.S. Customs Service. However, personnel from other Customs offices participated in its development.

ADOPTION OF THE INTERIM REGULATION

The interim regulation set forth as T.D. 80–116, in the Federal Register of May 1, 1980 (45 F.R. 29247), is adopted as set forth below.

WILLIAM T. ARCHEY
(For Commissioner of Customs).

Approved: October 16, 1980.

RICHARD J. DAVIS,
Assistant Secretary of the Treasury.

AMENDMENT TO THE REGULATIONS

Part 6, Customs Regulations (19 CFR Part 6), is amended by adding a new § 6.3a, to read as follows:

§ 6.3a. Entry and Clearance; Cuba

(a) Unless otherwise authorized by the Regional Commissioner of Customs, Miami, Fla. the owner or person in command of any aircraft clearing the United States for, or entering the United States from Cuba, whether the aircraft is departing on a temporary sojourn, or for export, shall:

(1) Clear or obtain permission to depart from, or enter at the Fort Lauderdale-Hollywood International Airport, Fort Lauderdale, Fla.;

(2) Before arrival from Cuba, furnish a notice of intended arrival to the Customs Service, either by or at the request of the commander of the aircraft, not less than 15 minutes before crossing the U.S. coast or border. The notice shall be furnished through the Federal Aviation Administration flight notification procedures or directly to the Customs officer in charge at the Fort Lauderdale-Hollywood International Airport, Fort Lauderdale, Fla. The notice shall include the following:

(i) Aircraft registration number;
(ii) Name of aircraft commander;
(iii) Number of U.S. citizen passengers;
(iv) Number of alien passengers;
(v) Place of last foreign departure;
(vi) Estimated time and location of crossing U.S. coast or border; and
(vii) Estimated time of arrival.

(3) Upon arrival, present a manifest of all passengers on board, as required by 8 CFR 231.1(b), to an officer of the U.S. Immigration and Naturalization Service or to a Customs officer acting as an Immigration officer.

(4) As a condition precedent to clearance present to Customs:

(i) The documents required by section 6.8 of this part; and

(ii) A validated license issued by the Department of Commerce, as provided for in 15 CFR 371.19, or a license issued by the Department of State as provided in 22 CFR part 123. See footnote ([2]) to section 6. 3 of this part.

(b) No passenger arriving from Cuba by aircraft will be released by Customs, nor will the aircraft be cleared or permitted to depart, before the passenger is released by an officer of the Immigration and Naturalization Service or by a Customs officer acting on behalf of that agency.

(c) All other provisions of this part relating to entry and clearance of aircraft are applicable to aircraft subject to this section.

(R.S. 251, as amended, sec. 624, 46 Stat. 759 sec. 1109, 72 Stat. 799, as amended (19 U.S.C. 66, 1624, 49 U.S.C. 1509))

[Published in the Federal Register, Nov. 3, 1980 (45 F.R. 72646)]

U.S. Customs Service

Proposed Rulemaking

(19 CFR Parts 18 and 112)

Carriers, Cartmen, and Lightermen

Notice of proposed amendments to the Customs Regulations relating to the carriage of bonded merchandise by private carriers

AGENCY: U.S. Customs Service, Department of the Treasury.

ACTION: Proposed rule.

SUMMARY: This document proposes an amendment to the Customs Regulations to simplify the requirements that a private carrier must meet to be designated as a carrier of bonded merchandise. The proposed amendment would provide that a private carrier may be designated as a carrier of bonded merchandise if (1) the merchandise (including containerized merchandise) transported is the property of the private carrier, and (2) the private carrier files a proper Customs bond. Conforming amendments are also proposed.

DATE: Comments must be received on or before (60 days from date of publication in the Federal Register).

ADDRESS: Comments (preferably in triplicate) may be addressed to the Commissioner of Customs, Attention: Regulations and Research Division, U.S. Customs Service, 1301 Constitution Avenue NW., room 2426, Washington, D.C. 20229.

FOR FURTHER INFORMATION CONTACT: Legal aspects: Donald F. Beach, Carriers, Drawback, and Bonds Division, 202-566-5856; operational aspects: Bradley Lund, Inspection and Control Division, 202-566-5354, U.S. Customs Service, 1301 Constitution Avenue NW., Washington D.C. 20229.

SUPPLEMENTARY INFORMATION:

BACKGROUND

Section 551, Tariff Act of 1930, as amended (19 U.S.C. 1551), provides that in the discretion of the Secretary of the Treasury, a private carrier, upon application, may be designated as a carrier of

bonded merchandise, subject to such regulations and, in the case of each applicant, to such special terms and conditions, as the Secretary may prescribe to safeguard the revenues of the United States with respect to the transportation of bonded merchandise by the applicant.

Section 112.11(a)(4), Customs Regulations (19 CFR 112.11(a)(4)), provides that District Directors may authorize a private carrier to receive and transport imported merchandise in bond if:

(i) The private carrier is the proprietor of a Customs bonded warehouse or bonded container station;

(ii) The merchandise (including containerized merchandise) to be transported is his property, having been imported by him or purchased from another importer; and

(iii) The merchandise is to be transported:

(A) From the port of importation, or port where entered for warehouse, to the private carrier's Customs bonded warehouse or bonded container station for physical deposit;

(B) From the private carrier's Customs bonded warehouse or bonded container station to another Customs bonded warehouse for physical deposit; or

(C) If for exportation, from the private carrier's Customs bonded warehouse or bonded container station to a Customs bonded warehouse at the port of exportation.

Customs is of the opinion that the present requirements in section 112.11(a)(4), which must be met by an applicant before being designated as a carrier of bonded merchandise, are needlessly restrictive. The goal of these requirements, as set out in 19 U.S.C. 1551, is to safeguard the revenue. Requiring a private carrier to be a proprietor of a Customs bonded warehouse or bonded container station and restricting a private carrier to transporting merchandise to or from the private carrier's bonded warehouse or bonded container station are not necessary to accomplish this goal and severely limit the number of carriers able to qualify as carriers of bonded merchandise. The carrier's bond and security requirements concerning container stations in sections 19.40–19.49, Customs Regulations (19 CFR 19.40–19.49), are considered adequate to protect the revenue if the private carrier is restricted to carrying property which it owns.

Accordingly, it is proposed to amend section 112.11(a)(4) by deleting the requirements in subparagraphs (i) and (iii), and by providing that a private carrier may be designated as a carrier of bonded merchandise if (1) the merchandise (including containerized merchandise) transported is the property of the private carrier (present subparagraph (ii)), and (2) the private carrier files Customs Form 3588, Private Carrier's Bond.

The deletion of the requirements in subparagraphs (i) and (iii) would allow a private carrier's vehicles, which now return empty to company locations after delivering merchandise at ports of export, to load imported merchandise for transportation under the bond for exportation or transportation or for transportation and exportation (Customs forms 7557, 7559). Private carriers also would be able to deliver their bonded merchandise by the most direct route.

On the basis of the requirement in present section 112.11(a)(4) that a private carrier must be the proprietor of a Customs bonded warehouse or bonded container station to be designated as a carrier of bonded merchandise, section 112.12(b)(3) provides that if a private carrier is the proprietor of Customs bonded warehouses in two or more Customs districts to which imported merchandise will be transported, he shall file Customs Form 3588, Private Carrier's Bond, with the District Director of Customs for one of the districts, accompanied by a statement showing the location of each warehouse and an additional copy of the bond for each additional district.

It is necessary to amend section 112.12(b)(3) to conform to the proposed amendment to section 112.11(a)(4) which would delete the requirement that a private carrier must be the proprietor of a Customs bonded warehouse or bonded container station to be designated as a carrier of bonded merchandise. It is proposed to amend section 112.12 (b)(3) to provide that the private carrier shall file Customs form 3588 with the District Director in the district where the private carrier intends to operate. If the private carrier intends to operate in two or more districts, he shall file the bond with the District Director for one of the districts, send a copy of the bond to the District Director for each additional district, and include with the bond and copies of the bond a list of all districts in which he intends to operate. If the private carrier is the proprietor of one or more Customs bonded warehouses or bonded container stations to which imported merchandise will be transported, he shall accompany the bond and copies of the bond by a statement showing the location of each warehouse and container station.

It is also necessary to amend section 18.2(e), Customs Regulations (19 CFR 18.2(e)), to conform to the proposed amendment to section 112.11(a)(4). Section 18.2(e) provides that any entry for immediate transportation in bond by a private carrier shall be accompanied by a commercial invoice setting forth the particulars of the merchandise and a statement verified by the District Director of the district in which the private carrier's warehouse is located requesting permission to transport the merchandise to the private carrier's warehouse. The proposed amendment to section 112.11(a)(4) would delete the requirement that a private carrier must be the proprietor of a Customs bonded warehouse or bonded container station to be designated as a carrier of bonded merchandise.

Accordingly, it is proposed to amend section 18.2(e) to provide that the commercial invoice must contain a statement verified by the District Director of the district to which the merchandise will be carried requesting permission to transport the merchandise under a carrier's bond for the purposes of either (1) transportation without prior placement in a warehouse under the bond for exportation or transportation or transportation and exportation (Customs forms 7557 or 7559), or (2) direct entry at another port without placement in a warehouse, or (3) transportation to his warehouse or to a warehouse operated by others.

The proposed amendments do not affect Customs requirements relating to the transportation of merchandise in bond by bonded common carriers, contract carriers, or freight forwarders.

PROPOSED AMENDMENTS

It is proposed to amend parts 18 and 112, Customs Regulations (19 CFR, parts 18, 112), in the following manner:

PART 18—TRANSPORTATION IN BOND AND MERCHANDISE IN TRANSIT

It is proposed to amend section 18.2(e), Customs Regulations (19 CFR 18.2(e)), to read as follows:

18.2 Receipt by carrier, manifest

* * * * * * *

(e) In addition to the foregoing, any entry for immediate transportation presented at the port of arrival for merchandise to be transported in bond by a private carrier shall be accompanied by a commercial invoice setting forth the particulars of the merchandise and a statement in the following form verified by the District Director of the district to which the merchandise will be carried:

The undersigned hereby requests permission to transport under the provisions of his carrier's bond, dated _____ on file at the port of _____, the merchandise described in the attached invoice from the port of _____ for the purposes of either (1) transportation to _____ without prior placement in a warehouse under the bond for exportation or transportation or transportation and exportation (Customs forms 7557 or 7559), or (2) direct entry at the port of _____ without placement in a warehouse, or (3) transportation to his warehouse or to a warehouse operated by others located at _____.

_____
Carrier

_____
Date

* * * * * * *

PART 112—CARRIERS, CARTMEN, AND LIGHTERMEN

1. It is proposed to amend section 112.11(a)(4), Customs Regulations (19 CFR 112.11(a)(4)), to read as follows:

112.11 Carriers which may be authorized

(a) *From port to port in the United States.*—The District Director may authorize the following types of carriers to receive merchandise for transportation in bond from one port to another in the United States upon compliance with the provisions of this subpart:

* * * * * * *

(4) Private carriers, if:

(i) The merchandise (including containerized merchandise) to be transported is the property of the private carrier; and (ii) The private carrier files Customs form 3588, Private Carriers Bond.

2. It is proposed to amend section 112.12(b)(3), Customs Regulations (19 CFR 112.12(b)(3)), to read as follows:

112.12 Application for authorization

* * * * * * *

(b) *Special requirements.*—In addition to the requirements in paragraph (a) of this section, the specified carriers shall also file with the District Director the following documents:

* * * * * * *

(3) *Private carriers.*—The private carrier shall file the bond with the District Director in the Customs district where the private carrier intends to operate. If the private carrier intends to operate in two or more Customs districts, he shall file the bond with the District Director for one of the districts, send a copy of the bond to the District Director for each additional district, and include with the bond and copies of the bond a list of all Customs districts in which he intends to operate. If the private carrier is the proprietor of one or more Customs bonded warehouses or bonded container stations to which imported merchandise will be transported, he shall accompany the bond and copies of the bond by a statement showing the location of each warehouse and container station.

AUTHORITY

These amendments are proposed under the authority of R.S. 251, as amended (19 U.S.C. 66), and sections 551, 565, 624, 46 Stat. 742, as amended, 747, as amended, 759 (19 U.S.C. 1551, 1565, 1624).

COMMENTS

Before adopting this proposal, consideration will be given to any written comments that are submitted timely to the Commissioner of Customs. Comments submitted will be available for public inspection in accordance with section 103.8(b), Customs Regulations (19 CFR 103.8(b)), during regular business hours at the Regulations and Research Division, room 2426, Headquarters, U.S. Customs Service, 1301 Constitution Avenue NW., Washington, D.C. 20229.

REGULATION DETERMINED TO BE NONSIGNIFICANT

In a directive published in the Federal Register on November 8, 1978 (43 F.R. 52120), implementing Executive Order 12044, Improving Government Regulations, the Treasury Department stated that it considers each regulation or amendment to an existing regulation published in the Federal Register and codified in the Code of Federal Regulations to be significant.

However, regulations of this nature which are nonsubstantive, essentially procedural, do not materially change existing, or establish new policy, and do not impose substantial additional requirements or costs on, or substantially alter the legal rights or obligations of, those affected, may, with Secretarial approval, be determined not to be significant. Accordingly, it has been determined that these proposed amendments do not meet the Treasury Department criteria for significant regulations.

DRAFTING INFORMATION

The principal author of this document was Laurie Strassberg Amster, Regulations and Legal Publications Division, U.S. Customs Service. However, personnel from other Customs offices participated in its development.

WILLIAM T. ARCHEY
(For Commissioner of Customs).

Approved: October 21, 1980.

RICHARD J. DAVIS,
Assistant Secretary (Enforcement and Operations).

(Published in the Federal Register, Oct. 27, 1980 (45 F.R. 70907)

331-468 O - 80 - 3

U.S. Customs Service

Customs Service Decisions

DEPARTMENT OF THE TREASURY,
OFFICE OF THE COMMISSIONER OF CUSTOMS,
Washington, D.C.

The following are decisions made by the U.S. Customs Service where the issues involved are of sufficient interest or importance to warrant publication in the CUSTOMS BULLETIN.

Dated: October 24, 1980.

SALVATORE E. CARAMAGNO
(For Director, Office of
Regulations and Rulings).

(C.S.D. 80-201)

Classification: Whether the Filling of Voids in Metal Castings With Putty and Sanding Are Advancements Beyond Cleaning

Date: February 8, 1980
File: CLA-2:RRUGC
061746 BB

DISTRICT DIRECTOR OF CUSTOMS,
Milwaukee, Wis.

DEAR SIR: This is in response to Request for Internal Advice No. 202/79 concerning the classification of certain castings for use in machine tools (your reference CLA-2-06-CV:IS WCW).

Facts.—The subject merchandise consists of large, nonmalleable, nonalloyed cast iron parts used as columns and beds on horizontal boring, drilling and milling machines. Prior to importation these parts are shot blasted to remove sand from the casting. A pneumatic chisel or a chipping hammer is then used to remove major fins, gates, and risers. Any remaining excess metal is ground down with a portable hand grinder. Voids or surface imperfections are then filled with putty which, after hardening, is hand sanded to create a relatively smooth surface. Finally, the castings are primed with paint to prevent corrosion during transportation. The castings are not subjected to stress relieving, heat treatment or any normalizing operations prior to importation.

Issue.—Whether the above described operations constitute an advancement of the castings so as to preclude classification in item 674.51, Tariff Schedules of the United States (TSUS).

Law and analysis.—The competing provisions of the Tariff Schedules are item 674.51, TSUS, covering cast iron (except malleable cast iron) parts, not alloyed and not advanced beyond cleaning, and machined only for the removal of fins, gates, sprues, and risers or to permit location in finishing machinery and item 674.53, TSUS, covering other parts of metalworking machine tools.

In *Ross Machine & Mill Supply, Inc., et al.* v. *United States*, 69 Cust. Ct. 160, C.D. 4389 (1972) the court held that cast iron roll bodies were properly classified in item 680.60, TSUS (now item 680.86, TSUS), a provision with the same requirements as item 674.51, TSUS. These roll bodies had been blasted with water to remove sand from the casting, submitted to a cutting operation to remove excess metal, bored to permit the location of journals, proof ground to determine if the rolls had a porous free surface, and painted to prevent oxidation during shipment. The court found that none of these operations advanced the castings so as to remove them from the provision.

The Customs Service has often ruled that painting a raw casting for the primary purpose of preventing rust during shipment does not constitute an advancement beyond cleaning within the meaning of item 674.51, TSUS. See HRL 032469 dated March 5, 1974, HRL 033509 dated May 23, 1974, and HRL 029634 dated November 16, 1973. Customs has also held that shot blasting an iron cylinder block casting does not constitute an advancement beyond cleaning within the meaning of item 660.50, TSUS (now item 660.64, TSUS), a provision with requirements equivalent to 674.51. See HRL 044174 dated March 10, 1976.

Apparently the only operation to which the instant castings are subjected that has not been previously considered in either a judicial or administrative ruling is the filling with putty and sanding. Trade opinion has been consulted and we determine that this filling operation is incidental to the creation of a merchantable casting and is not an advancement beyond cleaning within the meaning of item 674.51, TSUS.

We realize that there is some language in ORR ruling 417–71 indicating that the grinding and shot blasting operations might constitute an advancement precluding classification in item 608.25, TSUS (now 606.71, TSUS). However, the language of item 608.25, TSUS, is not identical to that of item 674.51, TSUS, and forgings are not identical to castings. Therefore ORR ruling 417–71 does not control this situation.

Holding.—Accordingly, the subject merchandise is properly classi) fied under the provision for cast iron (except malleable cast iron-

parts, not alloyed and not advanced beyond cleaning, and machined only for the removal of fins, gates, sprues, and risers or to permit location in finishing machinery, in item 674.51, TSUS, not dutiable if a product of the United Kingdom.

(C.S.D. 80–202)

Export Value: Whether a Buying Commission is Bona Fide and Nondutiable

Date: February 12, 1980
File: RRUCV BS
055412

Re: Application for further review of protest No. 2704–8–000276 (name of company).

DISTRICT DIRECTOR OF CUSTOMS,
Los Angeles, Calif.

DEAR SIR: The issue involved in the above-captioned matter is whether a buying commission which is part of the only price at which merchandise is sold must be included as part of dutiable value for purposes of determining statutory export value, section 402(b), Tariff Act of 1930, as amended.

The importer purchased certain merchandise utilizing the services of a third party to perform the usual functions of a buying agent, i.e., to obtain samples, inspect the goods, supervise shipment, etc. A commission of 5 to 7 percent was to be paid for each transaction depending upon the type of merchandise involved. The written agreement between the parties also provided that title to the goods was to vest immediately in the importer. The agent also certified its lack of financial interest, ownership or control in the manufacturer.

There is no evidence of sales or offers for sale of such merchandise to other purchasers in the United States, and the importer believes that it is the only purchaser of the specific merchandise involved. Nor do we have evidence of sales or offers of similar merchandise for exportation to the United States.

The Los Angeles import specialist is of the opinion that the fee paid to the agent is an integral part of the only price at which such or similar merchandise is freely sold or offered for sale, and, therefore, such fee is part of dutiable value using statutory export value as the basis of appraisement. The following cases are cited in support of this position: R.D. 11644, A.R.D. 251, R.D. 11613, and A.R.D. 263.

On the other hand, the importer submits that since it is the only purchaser of such merchandise, and since the buying agency is bona fide, the price less the buying commission should be accepted as fairly

reflecting the market value of the merchandise and thus representing export value. Our New York office is in agreement with this view.

It is settled law that fees paid to a buying agent are not dutiable while fees paid to a selling agent are dutiable. *United States* v. *Bauer*, 3 Cust. Ct. Appl. 343, T.D. 32626 (1912). In determining whether or not a buying agency actually exists, each individual case must be determined on its own particular facts. *C. R. Bolton, Inc.* v. *United States*, 62 Cust. Ct. 868, R.D. 11644 (1969). Functions performed by an agent such as searching the market for the best available prices for sale to the importer, making quality control inspection of merchandise prior to shipment, arranging shipment, and making payments on behalf of the buyer, none of which inures to the benefit of the agent, are all indicia of a purchasing agency. *Reliance International Corp.* v. *United States*, 62 Cust. Ct. 845, R.D. 11639 (1969). A financial relationship between the agent and seller would tend to militate against the existence of a bona fide buying agency, but would not in and of itself be determinative of the issue.

In the instant case, there is no evidence of any financial relationship between the agent and the seller, nor that the agent acted in any capacity other than as a bona fide representative of the importer. Accordingly, it follows that the agent acted solely for the convenience of the importer and that the latter could have purchased the merchandise directly from the seller without payment of the buying commission. This price, excluding the buying commission, is the price which must be used to establish export value, since a bona fide buying commission is always nondutiable. The fact that there were no other sales or offers for sale at a price excluding the commission is not determinative, since the freely sold price of this merchandise is the price less the commission. The cases cited by our Los Angeles office are not in point since they deal with alleged buying agencies that were not bona fide.

Under the circumstances, you are directed to allow the protest consistent with the foregoing.

(C.S.D. 80–203)

Classification: Whether Hog Flooring Is an Agricultural Implement

Date: February 15, 1980
File: CLA–2–RRUCGC
064258 E

AREA DIRECTOR OF CUSTOMS,
U.S. Customhouse,
New York, N.Y.

SIR: In your letter of January 17, 1980, you ask that we reconsider our decision of October 30, 1978 (057284), holding that polyvinyl

chloride hog flooring of a type permanently attached to a floor or other surface was not an implement within the purview of item 666.00, TSUS, and was therefore classifiable under the provision for articles not specially provided for, of rubber or plastics, in item 774.60, TSUS. You state that in reviewing the classification of hog flooring, the primary question is whether the flooring is considered an agricultural implement classifiable under item 666.00, TSUS, or whether the flooring is considered permanently installed and therefore not an implement but part of a structure.

You describe hog flooring, also known as manure screens, substitute flooring, and manure filters, as being composed of plastic (more recently) or metal, and is usually relatively small in size (for example 24 by 12 by 2 inches) although it may come in lengths up to 40 feet. It is generally rectangular in shape and is either a solid surface with antislip ridges, or is in the form of grating with slits or perforations. The purpose of the slits or perforations is to allow swine waste to pass through to the concrete floor underneath. In the case of the solid-type hog flooring, there are spaces between each rectangular section which allow the waste to pass through to the floor. The flooring, whether solid or slatted, is raised off the concrete floor of the barn or farm building. It is not permanently attached to the concrete floor, but rests on the inner edge of the farrowing crate in some manner to insure stability and proper alinement.

Manufacturers advised that they know of no hog flooring which is permanently attached to a stall, that approximately 95 percent of hog raising does not involve the use of hog flooring or thermally heated floors, and that hog flooring has come into use in the past 5 years. The purpose of the flooring is to help insure the health and safety of the hog, which is directly related to its full growth and to greater production of food. The hog flooring, whether slatted or solid, has ridges which prevent the animal slipping and causing injury to itself. The fact that it is raised off the floor makes it more sanitary as waste falls through to the floor below. The flooring when in use usually rests on the inner edges of the hog farrowing stall (crate). Stalls are composed of steel sides which are assembled with metal gates and bolted to the concrete floor of a barn. These crates have sides which are approximately 6 feet long and are bolted to the floor by means of 3-inch-long lag bolts. Four bolts hold each side; a crate consists of two sides and two gates. Therefore, eight bolts hold an individual crate in place.

You discuss various rulings bearing on the interpretation of the term "implement," and express the opinion that (1) the use of hog flooring is an agricultural pursuit, (2) that hog flooring is chiefly used in agricultural pursuits, and (3) that portability means, with reference to agricultural implements, movable or removable/movable.

Our consideration and review of the matter discloses that in a decision published at T.D. 44738 (59 T.D. 692, (1931)), the Bureau expressed the opinion that structural equipment of farm buildings which does not serve a purpose in performing work connected with the production of food or raiment for man is not contemplated by the provisions of paragraph 1604 of the tariff act relative to "agricultural implements." This position was in effect overruled a couple of years later in a decision of the Customs Court published as abstract No. 23401 (63 T.D. 1370, (1933)) holding that manure carriers, drinking bowls for cattle, and stanchions connected therewith were agricultural implements. The court found that the articles were used exclusively on a farm in connection with stock raising, and that entitled them to free entry as agricultural implements.

The overall interpretation of the term "agricultural implements" is found in *Wilbur-Ellis Co.* v. *United States*, 26 C.C.P.A. 403, C.A.D. 47 (1939), as follows:

> The provisions of paragraph 1604, supra, were intended "to encourage agriculture by according free importation to agricultural implements" and should be given a broad and liberal construction so as to carry out the evident purpose of the Congress. * * * The statutory term "agricultural implements" should be given a broad, not a narrow, meaning.
>
> In holding in the *Perry* case, supra, that leg bands of celluloid, chiefly used for the identification of poultry, were free of duty as agricultural implements under paragraph 1604, supra, this court, among other things, said:
>
> Frequently, "implement" is regarded as being synonymous with a tool or utensil used in manual work. The term has a broader meaning which we think should be accepted in arriving at the intent of Congress in the enactment of paragraph 1604. We quote several definitions of the noun "implement" from Webster's New International Dictionary:
>
> "Implement. 1. That which fulfills, or supplies a want or use; esp., and instrument, tool, or utensil used by man to accomplish a given work, as, the implements of trade, of husbandry, or of war.
>
> "2. A constituent part; an element. Obs. and R.
>
> "3. Scots Law. Fulfillment, performance.
>
> "Synonym. Implement, tool, utensil, instrument agree in suggesting relatively simple construction and personal manipulation. Implement is the broader term, frequently implying that by which an operation is carried on; tool commonly suggests the implements of a craftsman or laborer; * * *"

It seems to us that the poultry bands at bars are implements of the poultry raising business when chiefly used for the purpose of identification of poultry.

In view of the record clearly establishing that the hog flooring and stalls are chiefly used in the raising of hogs and noting the broad and liberal construction judicially decreed to be given to the term "implements," the described hog flooring and stalls should be classified under the provision for agricultural implements in item 666.00, TSUS, and accorded free entry. Prior rulings inconsistent with this decision are revoked or modified accordingly.

(C.S.D. 80-204)

Classification: Lace Fabric for Tariff Purposes Defined

Date: February 27, 1980
File: CLA-2-RRUCGC
061401 MH

DISTRICT DIRECTOR OF CUSTOMS,
St. Albans, Vt.

DEAR SIR: This ruling is in response to request for internal advice No. 90/79, concerning the classification of certain curtain fabrics.

Issue.—Whether the instant merchandise constitutes lace, for tariff purposes.

Facts.—Four swatches are presented. All are of warp knit construction. Styles R-659 and R-586 are openwork fabrics with laid-in yarns forming geometric designs. Style R-668 is a closer knit fabric containing rows of open rick-rack stitches separating areas of knit stitching which form designs. Style R-708 is an openwork fabric constructed of knit rick-rack stitches with designs formed by various chain stitch formations in the wales of the fabric. All of the fabrics are stated to have been made on a raschel machine and to be of man-made fibers.

Law and analysis.—In Headquarters ruling letter 052073 (dated Aug. 23, 1978), the instant merchandise was held classifiable under the provision for lace fabrics made on other than a leavers, bobbinet-jacquard or a Nottingham lace curtain machine in item 351.80, Tariff Schedules of the United States (TSUS).

In contending that the instant merchandise is not lace, for tariff purposes, the inquirer states that established rule that terms in the tariff schedules are to be construed in accordance with their common and commercial meaning.

The instant case is not, however, one of first impression. In *E. C. Carter & Son, Inc.* v. *United States*, C.D. 1889 (1957), the court, after

reviewing the various dictionary definitions of the term "lace," concluded:

> We are of the opinion, and so hold, that when it has been established as it has in the instant case, that the inwrought patterns or designed on the involved merchandise are ornamental or are of such character as to ornament the net fabric on which they appear, they are of sufficient importance to characterize as lace to the fabric on which they appear and that *the degree of ornamentation is immaterial* [italic added].

After *E. C. Carter*, numerous rulings by the Customs Service defined lace for tariff purposes as an openwork fabric having a preconceived inwrought design which decorates the fabric. See Headquarters rulings 061104, 055001, and 053160.

The Customs Service has articulated other criteria which are applied in determining whether lace is presented. In Headquarters 048975, we indicated that to constitute lace a fabric must have a sufficient amount of openwork and must be of a certain delicacy.

It is acknowledged that the above criteria lack geometrical precision and contain a certain subjective element. This type of test is, however, mandated by the nature of the merchandise presented. Experts in the lace industry contacted by the Customs Service are not always able to agree on whether a fabric constitutes lace.

A test suggested by the inquirer is the type of machine employed in creating the merchandise. It is argued, for example, that a raschel machine is not capable of producing lace fabric.

Raschel machines are extremely versatile, and can produce a wide variety of fabrics by utilizing yarns of any fiber or construction in a latched needle process. Openings are produced in raschel fabrics where two adjacent wales are not connected horizontally over a number of courses. This is the result of threading and guide bar movement. Generally, one to three guide bars will knit the ground, while the remaining bars create the pattern. Increasing the number of patterning bars increases the intricacy of the design produced. A raschel machine can be fitted to produce knits, conventional laces, as well as openwork fabrics which combine the characteristics of both. The fact that a raschel machine is employed does not therefore, preclude the merchandise from constituting lace, for tariff purposes. Moreover, the provisions for lace fabric provide for such fabric whether made on a leavers machine (items 351.30 and 351.40, TSUS) made on a bobbinet-jacquard machine, (item 351.50, TSUS) made on a Nottingham lace-curtain machine: (item 351.60, TSUS) or *made on any other machine* (item 351.80, TSUS) [italic added]. Thus it is the nature of the fabric produced rather than the machine employed which is determinative.

331-468 O - 80 - 4

The instant fabrics are certaintly not traditional floral laces. Under the criteria indicated, however, the merchandise must be considered lace. All are delicate fabrics containing substantial amounts of openwork with a preconceived inwrought design which decorates the material.

Holding.—The instant samples constitute lace for tariff purposes.

(C.S.D. 80-205)

Classification: Whether Baseball Caps With Braided Strip Are in Part of Braid

Date: March 4, 1980
File: CLA-2:R:CV:MA
055413 SST

To: District Director, Los Angeles, Calif.
From: Director, Classification and Value Division.
Subject: Request for further review of protest No. 27048-001458 of July 6, 1978.

Facts.—This protest was filed against your decision in the liquidation of entry No. 190285 of February 22, 1978, at the Port of Los Angeles.

The merchandise under consideration consists of polyester knit baseball caps which were classified as headwear, of manmade fibers, not in part of braid, in item 703.10, TSUS. The protestant claims that the proper classification of this merchandise is under item 703.05, TSUS, the provision for headwear of manmade fibers, in part of braid. He contends that the braid serves a useful purpose in the caps and that therefore the braiding should not be dismissed in arriving at a classification for the baseball caps.

Issue.—Is the tariff classification of this merchandise under item 703.10, the provision for manmade fiber headwear not in part of braid, correct?

Law and analysis.—The headwear involved are two visored baseball caps, one of which has a narrow braided strip whch runs around the length of the sweatband on the inside edge of the visor. The other cap has a braided strip which is on top of the baseball cap and extends from one side of the visor to the other.

In determining the classification of the baseball caps, it is important to consider general headnote 9(f)(iv), TSUS, which provides that:

> For purposes of the schedules, unless the context otherwise requires—(f) the term "of," "wholly of," "almost wholly of," "in part of," and "containing," when used between the description of an article and a material * * * have the following meanings (iv) "in part of" or "containing," mean that the article contains a significant quantity of the named material.

Our interpretation of the word "significant" as used in the above headnote implies a degree of usefulness, being meaningful or necessary, or denoting employment for a reason. An item would contain a significant quantity of braid if that portion or quantity serves a useful purpose and/or increases the salability of the article.

The protestant contends that the braid serves to separate the cap from the forehead, catches perspiration, and serves to provide a slight air space between the forehead and the sweatband. We find, however, that the braid in the sweatband serves no useful purpose. The braided trimming on the second cap also serves no useful purpose. As a trim it does not significantly increase the salability of the cap. In fact, these two braided trimmings are negligible additions which would not bring the caps into the category of manmade fiber headwear, in part of braid.

Holding.—The braided trimmings are not significant within the context of our interpretation of headnote 9(f)(iv), TSUS. The baseball caps, therefore, were properly classifiable as manmade fiber headwear, not in part of braid, in item 703.10, TSUS.

Your entry papers are returned.

(C.S.D. 80-206)

Classification: Monofilament Fly Fishing Line

Date: March 5, 1980
File: CLA-2:RRUCGC
061841 c

To: District Director of Customs, Tampa, Fla.

From: Director, Classification and Value Division.

Subject: Internal advice request No. 242/79 concerning the dutiable status of certain fly fishing line manufactured in England.

Facts.—The merchandise involved is monofilament fly fishing line. You state that in its condition as imported it is not put up or packaged for retail sale and consequently, classification under item 731.44, Tariff Schedules of the United States (TSUS), as other fishing line put up and packaged for retail sale, is precluded.

You maintain that the instant fly fishing line is classifiable under the provision for monofilaments (in continuous form), with or without twist, whether known as monofils, artificial horsehair, artificial straw, yarns, or by any other name, over 150 denier, valued over 85 cents per pound, in item 309.06, TSUS, and dutiable at the rate of 17.5 percent ad valorem.

Issue.—Whether the merchandise is precluded from classification under item 731.44, TSUS, and classifiable under item 309.06, TSUS, as you claim, or is classifiable under the provision for other equipment designed for sport fishing, in item 731.70, TSUS.

Law and analysis.—The tariff classification study, schedule 7, part 5, at page 596 of CIE 1/64, states that:

> Items 731.40, 731.42, and 731.44 are new provisions for fishing line of cotton, of flax and of other materials respectively. These provisions have been limited to fishing line "put up and packaged for retail sale" to facilitate their identification, as they are otherwise indistinguishable from yarn and cordage.

It had been our view that any packaging, even merely tying a length by itself into a small coil by means of a twistem or other tie would be sufficient to satisfy the statutory language "put up and packaged for retail sale" found in item 731.44, TSUS. However, information before this office is that fly fishing line is never sold at retail in other than a plastic folder or box. A mere twistem would not be packaging for retail sale. Rather, it is a means to facilitate segregation of the articles and to prevent the lines from becoming entangled. Consequently, the fly fishing line in issue is excluded from classification under item 731.44, TSUS.

Although the fly fishing line involved is precluded from classification under items 731.40 through 731.44, TSUS, in view of the exclusionary language in the superior heading to those item numbers, it is to be noted that no such exclusionary language appears in the Headnotes to subpart B, part 5 of schedule 7, and thus fly fishing line can be classified therein, if not more specifically provided for elsewhere.

Fly fishing line by visual examination is distinguishable from cordage because it is not uniform in diameter and construction for its full length. In addition, it is manufactured in specific lengths, is weighted proportionate to its length, and is tapered for wet or dry flyfishing. There are specific industry standards developed by the Associated Fishing Tackle Manufacturers Association. In the (name) catalog, the AFTMA size is listed along with the catalog number. As a result, fly fishing line is specially designed for use in sport fishing and is distinguishable from yarns and cordage. Item 731.70, TSUS more specifically describes fly fishing line than does item 309.06, TSUS. Fly fishing line meeting AFTMA standards is classifiable under item 731.70, TSUS.

Holding.—The fly fishing line involved is classifiable under the provision for other equipment designed for sport fishing, in item 731.70, TSUS, and currently dutiable at the rate of 12.1 percent ad valorem.

Effect on other documents.—Headquarters ruling dated August 1, 1978, file No. 055121, published as legal determination 3611–416, modified.

(C.S.D. 80-207)

Constructed Value: Allowance for Decrease in Material Costs on Date Preceding Exportation; Inability of Importer to Supply Information

Date: March 24, 1980
File: RRUCV JV
061393

Re Decision on application for further review of protest No. 3126-9-000001, dated February 8, 1979.

DISTRICT DIRECTOR OF CUSTOMS,
Anchorage, Alaska

DEAR SIR: This decision concerns the correct dutiable value of certain fabricated steel petroleum storage tanks from Japan.

The merchandise was appraised on the basis of export value, section 402(b), Tariff Act of 1930, as amended, as represented by the purchase price, plus a prorated addition for engineering. The protestant challenges the correctness of the appraisement claiming that constructed value under section 402(d) of said act is the proper basis, as represented by the market price of steel at the time of exportation. There is no dispute as to the dutiability of the engineering.

The record reveals that the tanks were purchased in November 1974 and exported to the United States in January and February 1976. It appears that at the time of purchase the price of raw steel was at its peak. However, at a time preceding the dates of exportation the price of steel had fallen approximately 40 percent.

The pivotal issue in this case is whether, under statutory constructed value, the merchandise should be valued at the purchase price, which reflected the higher price of steel existent at that time, or whether an adjustment should be made to allow for the reduction in the market price of the material at a time preceding the dates of exportation. The protestant maintains that such an allowance be made, and it take the form of an adjustment to the contract price, in accordance with sections 402(d)(1) and 500 of the Tariff Act of 1930, as amended.

Section 402(d)(1) relates to the cost of materials and fabrication or other processing of any kind employed in producing such or similar merchandise, at a time preceding the date of exportation of the merchandise undergoing appraisement which would ordinarily permit the production of that particular merchandise in the ordinary course of business.

Section 500 allows the appraising officer to use all reasonable ways and means to ascertain the value of imported merchandise.

The protestant's position with regard to the basis of appraisement is that export value does not exist because the tanks were tailored to meet the specific needs and specifications of the importer. As a result,

there is no price at which these or similar tanks were freely sold or offered for sale for exportation to the United States.

In previous Headquarters' rulings involving substantially the same issue, we ruled that the mere fact that an article is custom built or tailored to the particular needs and specifications of the buyer does not, in itself, preclude a finding of export value based on the selling price, provided that price includes all essential elements of value and the seller is under no positive obligation to restrict or confine sales to the original purchaser. See C.I.E. 264/58 and I.A. 178/75. However, where the selling price excludes an essential element of value, such as engineering, and the merchandise has no competitive equal, export value is generally precluded from consideration. T.D. 54860(24) followed.

In the instant case, we find no evidence or record of sales or offers at the appraised price so as to establish an export value at that price. Furthermore, an export value may not be found by merely adding to the selling price an estimated amount for assists, since that price presumably would not have represented the price of the merchandise at the time of exportation in accordance with the statute. Accordingly, since no export value has been shown to exist at the appraised price and U.S. value cannot be satisfactorily determined, it follows that constructed value is the proper basis of appraising the imported tanks.

We note that no particulars have been furnished as to the nature of the engineering, whether or not it was provided to the manufacturer free of charge, formed part of the selling price, billed separately by him, or otherwise accounted for. In addition, the importer is unable to furnish the actual contract for the subject shipments or information concerning material, labor, and fabrication costs including manufacturing periods. In the absence of such information, the proposed 40-percent allowance from the contract price for a decrease in material costs under sections 402(d)(1) and 500 cannot be allowed. Appraisement, in such a case, under constructed value, would be at the purchase price plus engineering, assuming, of course, the value of the engineering is not a component part of that price.

Accordingly, you are directed to dispose of this protest consistent with our findings above.

(C.S.D. 80-208)

Generalized System of Preferences: Direct Costs of Processing Operations; Substantial Transformation

Date: March 24, 1980
File: RRUCV:BS
542035

To: District Director of Customs, El Paso, Tex.

From: Director, Classification and Value Division Headquarters, U.S. Customs Service.

Subject: Request for Internal Advice No. 194/79.

The two issues involved in this internal advice request are (1) Whether certain specified costs are direct costs of processing operations for purposes of section 503 of the Trade Act of 1974; and (2) Whether certain materials shipped to the beneficiary developing country (BDC) for use in the imported merchandise have been substantially transformed for purposes of the statute.

The subject merchandise is produced in and imported from a BDC, and therefore, duty-free treatment will be accorded such merchandise provided the 35 percent eligibility criteria is satisfied. The importer sets forth various costs which it believes are includable in the 35 percent requirement as a "direct cost of processing operations." It is also the importer's opinion that certain material shipped to the producer should be considered a product of the BDC in that such material has been substantially transformed.

DIRECT COST OF PROCESSING OPERATIONS

To qualify for duty-free treatment under the Generalized System of Preferences (GSP), the sum of (1) the cost or value of materials produced in a beneficiary developing country and (2) the direct cost of processing operations or any combination of the two must not be less than 35 percent of the appraised value of the merchandise.

In order to be considered a direct cost of processing operations, the expense involved must be one which is directly related to, involved in, and necessary for the growth or assembly of the specific product or article under consideration. Such costs include not only direct labor costs but also dies, tooling, and depreciation on machinery and equipment allocable to the specific merchandise. However, various indirect expenses, such as administrative costs, sales taxes, and casualty and liability insurance, are not direct costs of processing operations. (See section 10.178, Customs Regulations.) The various cost items claimed to be direct costs of processing operations, and our comments with regard to each item, are set forth below.

(1) *Travel Expenses of U.S. Engineers.*—The importer periodically sends engineers to the Mexican plant to assist in production. Since the applicable portion of the wages paid to these personnel are considered to be includable in the 35 percent eligibility criteria as a production assist, the importer argues that all costs incurred in connection with the rendering of the assist, including travel expenses in connection with this assistance, should also be includable.

We have held that the value of an assist may constitute a direct cost of processing for purposes of the 35 percent requirement. See Internal Advice No. 83/76, dated February 24, 1977. The applicable portion of the engineers' wages and fringe benefits would fall within this category. We also agree that the cost of travel which is necessary

to bring the engineer to the BDC (and return) to render the services which are considered to be directly related to production are also part of the assist value for purposes of the 35 percent requirement.

(2) *Shipping and Receiving Wages.*—Certain of the manufacturer's employees are involved in the handling of raw materials upon receipt in the plant and the handling of goods in the packing and preparation for shipping. This consists in part of unloading and stocking raw materials, distributing these materials to the assembly line, maintaining the storage area and the raw material inventory record.

After quality control on the goods has been performed, the manufacturer's employees sort the merchandise, place it on packing sheets, and package it prior to shipment. These processes occur before the physical shipment or departure of the goods from the plant. The packaging material and cartons are nonreusable shipping containers.

We have previously held that packaging performed in a BDC and essential for the shipment of an eligible article to the United States is a cost or value includable in the 35 percent test under GSP. This value includes the cost of packaging operations and the cost or value of materials which are produced in the BDC and are nonreusable shipping containers. (See C.S.D. 79–199, dated October 19, 1978.) We also believe that the handling of raw materials upon receipt in the plant is directly related to the processing operation.

Accordingly, the labor costs applicable to these functions are direct costs of processing operations and are includable in the 35 percent requirement. However, it is not clear from the record whether the packing materials and cartons are products of the BDC. If not (or if they have not undergone a substantial transformation), the value thereof cannot be included in the cost of materials for purposes of the 35 percent requirement.

(3) *Janitorial Labor Costs.*—These workers maintain the work area and offices of the plant. The importer believes that the pro rata portion of these costs attributable to the work area is a direct cost of processing.

We have previously held that the pro rata share of overhead expenses such as rent, utility costs, and taxes, which are attributable to the processing operation, are examples of direct costs of processing. These costs are the type of overhead expenses which appear to be directly related to, and necessary for, the manufacturing process.

While we have previously held that in general janitorial services are not direct costs of processing, it is now our view that such costs, to the extent incurred in the plant or factory area, may be so included. This is due to a recognition that factory areas may very well become unsafe if not kept relatively clean and free of scrap material, and that as a practical matter, production may be hampered if no such services

were performed. In this manner, custodial services performed in the factory area are analogous to factory overhead, such as electricity to keep the machines running and heat to keep the workers comfortable.

Accordingly, such costs may be included as part of the 35 percent requirement.

(4) *Nurses' Wages.*—Mexican law requires onsite medical personnel for workers. Thus, the importer argues that the cost attributable to these services should be considered a direct cost of processing.

In Internal Advice No. 41/76, dated February 25, 1977, we held that payroll taxes for direct labor were a direct cost of processing operations. Since Mexican law requires payment of such taxes and also requires the onsite availability of medical personnel, it is argued that both costs should be similarly treated.

Payroll taxes for direct labor are a necessary cost and directly related to the processing function. On the other hand, the cost of medical personnel, though required by Mexican law, can in no way be viewed as directly related to the processing operation. Accordingly, such costs are not includable in determining the 35 percent requirement.

(5) *Watchman's Wages.*—The watchman has the responsibility of controlling the people who enter the producer's facilities. He also performs a security check throughout the night.

This function is only indirectly related to the manufacturing process, and the costs attributable thereto cannot be included in determining the 35 percent requirement.

(6) *Driver's Wages.*—This driver transports raw materials from the border to the plant.

These costs can be reasonably allocated to the manufacture of the merchandise, and accordingly, are direct costs of processing operations within the meaning of the regulations. See section 10.178(a), Customs Regulations.

(7) *Executive: Personnel Officer.*—Approximately 97 percent of the manufacturer's employees are direct laborers. The personnel officer and assistant perform the following functions: (1) the locating and hiring of direct labor; (2) the settlement of disputes among laborers; (3) the introductory training of the laborers as to the nature of the job, the product and facilities; and (4) participation in the negotiations with laborers regarding termination pay.

Clearly, this function is not directly related to the production process, but is rather an indirect cost of manufacturing operations. Accordingly, salaries and related costs attributable to these personnel are not included in determining the 35 percent requirement.

(8) *Executive: Production Related.*—These personnel oversee and plan production. An example of one function performed is the prep-

331-468 O - 80 - 5

aration of production schedules as to when and what to build. In addition, this area includes the general foreman, who is responsible for directing the several department foremen who, in turn, supervise the direct laborers.

The regulations specifically exclude from the direct cost of processing operations administrative salaries. (See section 10.178(b)(2), Customs Regulations.) Thus, in most instances, the salaries of these individuals would not be includable.

The functions of the individuals described, although production-related, are not so directly involved with the manufacturing process as to fall within the language and intent of the statute. Accordingly, these costs are not includable within the 35 percent requirement. If, however, any of the involved personnel perform the functions of a firstline production foreman, the salary percentage (and fringe benefits) related to performance of that function would be a direct cost of processing operations.

(9) *Legal Expenses.*—Upon termination, direct laborers are afforded negotiated termination pay according to Mexican labor law. If the laborer disagrees with the amount the company proposes to pay, he has the right to appeal to the Mexican labor board. In these proceedings, the manufacturer is represented by legal counsel. It is urged that since these legal expenses are associated with finalizing termination pay, which is a direct cost of processing, the company's expense in providing this fringe benefit should also be so categorized.

All expenses associated with a direct cost of processing are not necessarily considered to be similarly categorized. An absurd result would follow. We see no difference between these legal expenses incurred and the salary payable to executives who may set salary levels. In either case, we are talking about a cost that clearly is not directly involved with the manufacturing process. Therefore, these legal costs may not be included in the 35 percent requirement.

(10) *Office Supplies.*—The importer advises that a substantial portion of this expense is production-related. This includes the quality control data sheet, production report forms, bill of material used by the production staff to determine the materials necessary for a particular product.

While these supplies may be related in a general way with production, they are not directly involved in the manufacturing process, but rather are indirect costs of processing. Therefore, such costs cannot be included in determining the 35 percent requirement.

(11) *Miscellaneous Expense.*—(a) Newsprint paper used to cover workers' benches and other work areas, which also serves as a blotter by the workers; (b) pallets used in the storage of raw materials; (c) pro rata expense of work permits for U.S. labor for persons involved

in production; (d) pro rata portion of realty trust fee paid to the trustee of the land and building for administering the trust. Under Mexican law, the manufacturer may not own realty, so a trust was established.

We find the costs incurred for newsprint paper, pallets, and pro rata share of the work permits to be includable in the direct costs of processing operations for purposes of the 35 percent requirement. To the extent the realty trust fee is paid for use of the factory area, it is analogous to rent which we have previously held to be includable as factory overhead. Thus, these costs may be considered direct costs of processing operations.

(12) *Other Wages.*—(a) Wages of office employee who is responsible for the importation of raw materials; (b) wages of persons who prepare production reports.

These expenses are not directly related to the production process but rather are indirect costs of processing. Therefore, administrative expenses and such costs are not includable within the 35 percent requirement.

SUBSTANTIAL TRANSFORMATION

The importer advises that certain material is purchased and shipped to the BDC for use in the assembly of products. In the importer's opinion, the following materials should be considered a product of the BDC in that they are substantially transformed constitutent materials: (1) Amicon resin and Amicon hardener; (2) Durez resin and acetone; and (3) Novamont plastic pellets.

In order to be considered a material produced in a beneficiary developing country within the meaning of section 503(b)(2)(A)(i) of the Trade Act of 1974, an imported material must be substantially transformed into a new and different article of commerce prior to being used as a constituent material in the production of a GSP-eligible article. See section 10.177(a)(2) of the Customs Regulations. A substantially transformed constituent material must have a separate existence apart from the imported material and from the exported eligible article.

The mixing of either Amicon resin and Amicon hardener or Durez resin and acetone does not result in a substantially transformed constituent material. For example, the mixing of Amicon resin and hardener initiates a cured epoxy resin. At the time of curing, the epoxy is an integral element of the coil. For the purposes of the GSP, the mixing did not result in an identifiable intermediate article of commerce having a separate existence apart from the materials as imported into Mexico or from the coil.

Mixing of powdered dye and polypropylene pellets does not result in a substantial transformation of those imported materials. Furthermore, subsequent heating of the mixture to a semisolid state and injection molding of the plastic over a coil winding does not result in a substantially transformed constitutent material. The imported plastic is molded directly onto a coil winding. No identifiable intermediate is produced from the imported materials prior to application to a coil.

We distinguish the instant case from prior Headquarters' rulings, such as a ruling letter dated November 15, 1978 (file 045275, ORR Ruling 77-0081), in which plastic pellets were injection molded to form separate and identifiable component parts which were subsequently processed into GSP-eligible articles. In the above case, plastic pellets were molded into end caps which were then assembled onto electric motors. In the instant case, imported materials are coated or molded directly onto coils and are not processed into intermediates having a separate existence as new and different articles of commerce.

The issues in the instant cases are analogous to the issue in Headquarters' ruling of August 20, 1979 (file 055687). In that case we held that imported metal salts, when placed into an electrolytic solution and plated out as free metal directly onto an article, were not processed into substantially transformed constituent materials.

(C.S.D. 80-209)

Classification: Whether Baseball Caps With Noncontrasting Braid Are in Part of Braid

Date: March 25, 1980
File: CLA-2: RRUCGC 061922 DFC

To: Area Director of Customs, 6 World Trade Center, New York, N.Y.

From: Director, Classification and Value Division.

Subject: Internal Advice Request No. 15/80 concerning the classification of headwear in part of braid.

Facts.—You ask that we reconsider HLR 062673 C dated September 7, 1979, and HLR 062727 C dated September 26, 1979. Those rulings held that the color of the braid resting at the intersection of the visor and the crown of a baseball-type cap of manmade fibers need only contrast with the color of the visor or front panel to qualify such cap for classification under the provision for headwear, of manmade fibers wholly or in part of braid in item 703.05, Tariff Schedules of the United States (TSUS).

Issue.—Whether the color of the tubular braid resting at the intersection of the visor and crown of a baseball-type cap of manmade fiber must contrast with the color of the crown or visor in order to qualify such cap for classification under the provision for headwear, of manmade fibers, wholly or in part of braid in item 703.05, TSUS.

Law and Analysis.—Schedule 3, headnote 3(a)(iii), TSUS, provides that:

> For the purpose of the tariff schedules—(a) "ornamenteds" as used with reference to textile fabrics and other articles of textile materials, means fabrics and other articles of textile materials which are ornamented with (iii) lace netting, braid, fringe, edging, tucking or trimming or textile fabric.

General headnote 9(f)(iv), TSUS, provides that " 'in part of' or 'containing' mean that the article contains a significant quantity of the named material". Further it states that "with regard to the application of quantitative concepts specified in subparagraphs (ii) and (iv) above, it is intended the *de minimis* rule apply."

As you state, this office has taken the position that the term "significant" as used in general headnote 9(f)(iv), TSUS, is not solely quantitative. For example T.D. 78-210 stated our position as follows:

> We do not agree that the word "significant" in the cited headnote has reference to quantity alone. We believe that if this were so, then the word "substantial" would certainly have been used to clearly convey that meaning.
>
> Our interpretation of the word "significant" as used in the aforementioned headnote implies a degree of usefulness, being meaningful or necessary, or denoting employemnt for a reason. Thus, an item would contain a significant quantity of braid if that portion or quantity serves a useful purpose and/or increases the salability of the article.

It is your position that the cap of manmade fiber which is in issue here is not in part of braid for the following reasons:

(1) A braid immediately adjacent to a part of a cap of the same color does not ornament the cap to a significant degree, even though the requirement of schedule 3, headnote 3 are met vis-a-vis ornamentation because it fails to meet the requirements of general headnote 9(f)(iv), TSUS.

(2) When a braid does not contrast visually with the adjacent portions of the cap, it is almost unnoticeable and cannot be construed to be present in substantial quantity.

We agree with your view that the thrust of legislative history in this matter is not to permit a commercially insignificant amount of a specified component material to control the classification of an imported article. This concept is not new. In the case of *E. Fougera & Co.* v. *United States*, 49 T. D. 986, C.D. 41632 (1926), the Cus-

toms Court held that the words "in part" referred to "a substantial part in a commercial sense." More recently the Customs Court concluded that both general headnote 9(f)(iv) and the Tariff Classification Study "support a view that only in the most limited of circumstances should a quantitatively minute quantity (of the named material) control classification" *Aceto Chemical Co., Inc.* v. *United States*, 75 Cust. Ct. 167, 169, C.D. (1975); and *United States* v. *Cavalier Shipping Co., Inc.*, 60 CCPA 152, C.A.D. 1103 (1973).

It appears to be your position that the degree to which the braid ornamented, embellished, or enhanced the appearance of the cap in issue is not significant inasmuch as the braid did not contrast visually with the crown portion of the cap.

Schedule 3, headnote 3(a)(iii), TSUS, specifically names braid as ornamentation without reference to whether it contrasts in color to that which it ornaments. Although noncontrasting braid may not be seen at a distance on the baseball-type cap in issue, it is readily seen at arm's length. We submit that when one purchases a cap, an inspection at arm's length or less takes place. At this distance the braid is seen and, whether it contrasts or not, it adds to the saleability of the cap because such cap is per se ornamented.

For the reasons stated above, it is our position that noncontrasting braid at the intersection of the visor and the crown which runs the width of the cap is a significant quantity of braid within the purview of general headnote 9(f)(iv), TSUS.

Holding.—The color of the tubular braid of the intersection of the visor and crown of a baseball-type cap of manmade fibers, which runs the width of the cap, need not contrast with the color of the crown or visor in order for such cap to be classifiable under the provision for headwear, of manmade fibers, wholly or in part of braid in item 703.05, TSUS. HRL 062673 of September 7, 1979, and HRL 062727 of September 26, 1979, modified accordingly.

(C.S.D. 80-210)

American Selling Price: Legal Similarity of Footwear; Willing to Receive Price Under Section 402a(g), Tariff Act of 1930, As Amended

Date: March 25, 1980
File: CLA-2:RRUCGC
031634 c DFC

To: Area Director, New York Seaport, New York, N.Y.
From: Director, Classification and Value Division.

Subject: Internal advice request No. 210/79 concerning the applicability of the American selling price basis of valuation to certain footwear produced in Taiwan.

Facts.—Sample No. 01–6506–00 (Customs sample No. 639) covered by New York entry No. 486005 dated August 8, 1978, is a women's open-toe, open-back, indoor slipper having an acrylic boa upper with pintuck fabric back and foam lining, an acrylic boa sock, a self-covered wedge and an EVA outsole.

Sample No. 01–6/8503–00 (Customs sample No. 694), covered by Baltimore entry No. 158107, dated August 8, 1978, is a women's closed-toe, closed-back, indoor slipper with a flat bottom and an upper of boa/velvet.

Sample No. 01–0435/6–00 (Customs sample No. 596), covered by Baltimore entry No. 158107, dated August 8, 1978, is a women's closed-toe, open-back, indoor slipper with a medium wedge and an upper of boa/velvet.

Sample No. 01–6362–63 (Customs sample No. 596), covered by Baltimore entry No. 158107 dated August 8, 1978, is an infant's closed-toe, closed-back, indoor slipper with a flat bottom and a boa/velvet upper.

Sample No. 01–6502–88 (Customs sample No. 595), covered by Baltimore entry No. 163068, dated August 28, 1978, is an infant's closed-toe, closed-back, indoor slipper with a flat bottom and a boa/velvet upper.

Sample No. 01–0383–00 (Customs sample No. 595), covered by Baltimore entry No. 163068, dated August 28, 1978, is an infant's closed-toe, closed-back, Indoor slipper with a flat bottom and a boa/velvet upper.

Sample No. 01–6133–21 (Customs sample No. 639), covered by New York entry No. 486005, dated August 8, 1978, is an infant's closed-toe, closed-back, indoor slipper with a flat bottom and an upper of boa/velvet.

The footwear described above is classifiable under the provision for other footwear which is over 50 percent by weight of fibers and rubber or plastics with at least 10 percent by weight being rubber or plastics and having uppers of which not over 90 percent of the exterior surface area is rubber or plastics in item 700.60, Tariff Schedules of the United States (TSUS), and dutiable at the rate of 20 percent ad valorem.

There is listed below the American selling prices for those domestic shoes which you consider legally similar to the imported models pursuant to schedule 7, part 1, subpart A, headnote 3(b), TSUS:

Imported style	Domestic style	ASP	Effective date
01-6506-00	Oomphies Bonbon	$6.00	Feb. 13, 1978
01-6/8503-00	Wiesner 8800P	1.25	Mar. 2, 1978
01-0435/6-00	Supreme 4064	1.70	Apr. 13, 1978
01-6362-63	Tru-Stitch 2000 with character head	1.15	Jan. 11, 1978
01-6502-88	Tru-Stitch 2000 without character head	.90	Jan. 11, 1978
01-0383-00	Tru-Stitch 2000 without character head	.90	Jan. 11, 1978
01-6133-21	Tru-Stitch 2000 without character head	.90	Jan. 11, 1978

The American selling price of 90 cents listed for the Tru-Stitch 2000 is the price which the manufacturer is willing to receive for this slipper without the character head. The American selling price for this slipper with the character head is $1.15 as noted above.

Issue.—(1) Whether the imported footwear is legally similar to the domestic styles for ASP purposes.

(2) Can a "willing to receive" price by a domestic producer be used as the basis for an American selling price appraisement?

Law and analysis.—For the purpose of determining similarity in American selling price causes, four tests have been used as guides: (1) Similarity of material, (2) commercial interchangeability, (3) adaptability to the same use, and (4) competitive character.

In 1966 certain guidelines to be used in appraising footwear were issued by the Commissioner of Customs. These guidelines provide in part that:

> In carrying out that function such officers shall use all reasonable ways and means to select the product manufactured in the United States which in their opinion is like or similar to the import in physical characteristics such as appearance, durability, quality, construction, workmanship, and finish.

It is our position that the imported footwear and the domestic styles listed above are legally similar because they substantially meet the tests and guidelines set forth above for determining similarity.

Section 402a(g), Tariff Act of 1930, as amended, provides that:

> The American selling price of any article manufactured or produced in the United States shall be the price, including the cost of all containers and coverings of whatever nature and all other costs, charges, and expenses incident to placing the merchandise in condition packed ready for delivery, at which such article is freely offered for sale for domestic consumption to all purchasers in the principal market of the United States, in the ordinary course of trade and in the usual wholesale quantities in such market, *or the price that the manufacturer, producer, or owner would have received or was willing to receive for such merchandise*

when sold for domestic consumption in the ordinary course of trade and in the usual wholesale quantities, at the time of exportation of the imported article. [Italic added.]

Your attention is invited to TD 55274(13) which reads in part that:

When a like or similar item is produced and offered in the United States, that is, which was like or similar to the sample at one stage of manufacture, the footwear is to be valued under the applicable provision in section 402 for American selling price. The price taken would be for the comparable domestic product at the same stage of manufacture as the sample, predicated on the price the U.S. producer would have received or was willing to receive.

In view of section 402a(g), Tariff Act of 1930, as amended, and TD 55274(13) cited above, it is our position that the "willing to receive" price of 90 cents for the domestically produced Tru-Stitch 2000 set by the domestic manufacturer is the American selling price for that shoe.

Holding.—Sample Nos. 01-6502-88, 01-0383-00, and 01-6133-21 are subject to appraisement on the American selling price of the domestically produced Tru-Stitch 2000 without character head.

Sample No. 01-6362-63 is subject to appraisement on the American selling price of the domestically produced Tru-Stitch with character head.

Sample No. 01-0435/6-00 is subject to appraisement on the American selling price of the domestically produced Supreme 4064.

Sample No. 01-6/8503-00 is subject to appraisement on the American selling price of the domestically produced Wiesner 8800P.

Sample No. 01-6506-00 is subject to appraisement on the American selling price of the domestically produced Oomphies Bonbon.

(C.S.D. 80-211)

Cost of Production: Apportionment of Fixed Overhead Costs

Date: March 26, 1980
File: RRUCV BS
061094

Re: Application for further review of protest Nos. 1401-8-000245 through 1401-8-000250.

DEAR SIR: The primary issue involved in the above-captioned protests is whether the accounting method utilized by the foreign supplier in allocating certain fixed expenses between its European production and its U.S. production may be used in determining the usual general expenses under a statutory cost of production appraisement.

331-468 O - 80 - 6

Under the exporter's method of accounting, certain general expense items are excluded from the cost of production of the imported merchandise, for the reason that in the judgment of management, they are not incurred in connection with that part of the production exported to the United States.

Protestant explains that it uses the full absorption costing method of accounting, in that all costs required under such method to be allocated to units of production are allocated to units of production. However, certain costs are allocated on a disproportionate basis to the vast majority of production intended for the European market, rather than the small portion of production intended for the U.S. market (stated to be less than 2 percent of total production) because such costs are fixed in nature and are in fact absorbed in the exporter's sales to the European market. Essentially, the argument is that such costs do not increase with the increase in production to the United States. The specific items of cost that are not allocated to U.S. production pursuant to this method of accounting are general plant overhead and maintenance, research and design, and depreciation of machinery and buildings.

Under section 402a(f), Tariff Act of 1930, as amended, the cost of production of imported merchandise includes "* * * the usual general expenses (not less than 10 per centum of such cost) in the case of such or similar merchandise." However, the statute is silent as to the appropriate accounting methods to be utilized to determine the allocation of various general expenses partially attributable to U.S. production when such production is but a part of the total production. Under these circumstances, it is Customs position that a method that allocates certain fixed costs, which would otherwise be at least partially applicable to U.S. production, solely to the production for the foreign market, cannot be acceptable for purposes of determining statutory cost of production. In this instance, it is our opinion that an equitable method of allocation is one that permits fixed costs to be apportioned equally over total production.

Concededly, the decision to produce additional automobiles for export to the United States in the instant case may not have increased certain fixed costs. However, this does not warrant an allocation of such costs which may either be grossly disproportionate in favor of European production or which entirely excludes U.S. production from an appropriate share.

This view is not intended to discredit the accounting method itself, which may be a useful tool to the company in terms of decisionmaking regarding changing levels of production, or for other purposes. Rather, we are of the opinion that, in the context of a cost of production appraisement, such method is inappropriate. We believe our position is supported by the decision rendered by the Court of Customs and

Patent Appeals in *John V. Carr & Son, Inc.* v. *United States*, 52 CCPA 62 (1965).

In *Carr*, the manufacturer produced identical articles for home consumption and for export to the United States. The substantially higher home market prices were primarily due to the higher general expenses that were attributed to the merchandise produced for domestic consumption. Certain fixed items of overhead (taxes, insurance, depreciation) were entirely excluded from the cost attributable to the exported merchandise. The court held in that case that the assignment of fixed costs to the extent and in the manner disclosed arbitrarily excluded a fair proportion of overhead expenses relating to cost of production which are reasonably and normally chargeable to export operations.

While in *Carr* the volume produced for sale in the home market was less than that produced for exportation to the United States, in our opinion that fact reinforced the court's determination but was not the central factor which influenced its decision.

Rather, the dominant factor appeared to be the total exclusion of certain fixed expenses from the constructed value computation. The court concurred with the lower court's opinion that—

> * * * such blanket license to a foreign shipper to estimate costs in accordance with his own peculiar accounting standards is susceptible of depressing the values of imported merchandise and of thwarting the statutory objective of reaching a value as far as possible consistent with that which fairly reflects market value * * *.

The fact that constructed value was the basis of appraisement in *Carr* would not prevent application of its principles to the instant matter, since it is settled law that—

> * * * constructed value and cost of production formulae are designed, * * * to embrace all expenses of manufacture or fabrication of an article, whether borne by manufacturer or purchaser. (See *Goodrich-Gulf Chemicals Inc.* v. *United States*, 66 Cust. Ct. 509 (1971), R.D. 11733.)

Although it has been held that—

> * * * slight variations in the cost, which do not appreciably affect the cost called for by the statute may be disregarded in determining the cost of production" (see *Glanson Co.* v. *United States*, R.D. 9208 (1958), aff'd. A.R.D. 110 (1958)),

it is apparent that the variation in the instant case is substantial and cannot be disregarded. According to protestant, the unit cost for general expenses per automobile (in French francs) is 1,641.20 by its calculations versus 3,845.51 by Customs calculations. We are of the opinion that the appraising officer's method of allocation (as described, supra) is correct and that the exporter's method of accounting resulted in a gross distortion of the costs of manufacture applicable to goods produced for the U.S. market, and accordingly, cannot be utilized for statutory cost of production purposes.

In the alternative, protestant contends that Customs is estopped from employing a different method of allocating general expenses with respect to the subject entries because it relied on Customs acceptance and approval of the accounting method the company utilized in determining this allocation. Protestant alleges that this method had been utilized since 1958, that several Customs verifications had been conducted since that time but the company was never instructed to change its accounting method in this regard. As a result, protestant continued to rely on Customs approval of the method of accounting used and projected its duty liability on this basis. Its vehicles were priced accordingly.

Specifically, protestant alleges that in March 1973, Customs initiated a foreign investigation regarding the costs of production submitted by protestant for its 1972 model automobiles. The investigation was concluded in October 1974, 3 months after the last entry of 1974 model cars had been made, with only minor adjustments to the calculations. At no point during this investigation was the overall method of accounting put into question. In protestant's opinion, the outcome of the investigation, which did not result in any change in the accounting method utilized, must be regarded as approval by Customs of this method which had been used by protestant for approximately 15 years.

A second foreign investigation, this one regarding the model year 1974, commenced in September 1975. While the final report of this investigation proposed a fundamental change in the accounting method utilized, protestant did not learn of the contents of the report until September 1977. Moreover, when liquidation of the 1974 model year entries began in 1978, the method used by Customs was different than the approach taken in the report.

Protestant argues that liquidation of the subject entries at the advance contemplated by Customs would be a retroactive change contrary to established principles of law. Various court decisions are cited as support for its position.

Primarily, these cases deal with situations in which an administrative agency's construction of a statute changes after the aggrieved party had taken certain irrevocable actions in reliance on the prior construction. In those situations, the courts have held that the rights or benefits acquired prior to the change cannot be affected retroactively. (See, for example, *Henry Clay & Bock & Co., Ltd.* v. *United States*, 41 CCPA 45 (1953).)

We do not disagree with the protestant's interpretation of the cited cases, nor with the rationale underlying these various decisions. However, we believe that the application of these cases to the particular facts here involved are misplaced.

The cited cases deal with administrative rules that were changed to the detriment of the aggrieved party who had a definite right to

rely upon, and did rely upon, the previous stated policy or rule. On the other hand, in the instant case, we have no prior rule or policy, express or otherwise, with regard to acceptance of the type of accounting method utilized by protestant. Mere acceptance of the cost submissions by Customs does not by itself constitute approval of the methods used by protestant to determine these costs. Nor can we logically infer approval based on an investigation that does not focus on the accounting methods utilized, but rather on the accuracy of the cost figures submitted. We note in this regard that our records fail to disclose any foreign verifications until 1970, and we have no record of the import specialist's final decision with respect thereto. As previously indicated, the verification involving the 1972 model year was concerned solely with the accuracy of the submitted costs, and not the underlying rationale.

Accordingly, we find no prior Customs approval of the accounting method utilized by protestant, and thus no retroactive change in Customs' policy in this regard. Moreover, the purpose of a foreign verification is to gather data, and not to appraise merchandise. Therefore, while the investigating agent may have made certain proposals in his final report as to the cost of production submissions on the 1974 model cars, these proposals were not binding on the import specialist, who is the responsible Customs officer on matters of appraisement.

Protestant makes the additional argument that the delay of nearly 5 years in liquidating the subject entries was unreasonable and precludes the imposition of higher duties. It is argued that Customs was entirely at fault for the delay, and that such inaction is in contravention of legislative intent and Customs regulations. (Sec. 159.51 provides that liquidation of entries shall be suspended only when provided by law or regulation, or when directed by the Commissioner of Customs.) Protestant alleges financial harm as a result of the delay (assuming administrative relief is denied), since it priced its vehicles for subsequent years in reliance on past practice.

The record discloses that the entries in question were the subject of a foreign investigation commencing in September 1975 and which culminated in a final report dated May 19, 1977. Protestant submits that it did not learn of the contents of the report until September 1977.

While the actual contents of the aforementioned report were not known to protestant until September 1977, it appears from the record that Customs counsel was aware at a much earlier date that the verification would encompass more than the accuracy of the submitted costs. Thus, in a memorandum dated July 3, 1975, which was furnished to the office of the Customs representative by Customs counsel (name of counsel), at that time counsel to the (name of importer) advised the members that in the future Customs would provide

closer scrutiny into the manner in which cost of production was calculated. He urged the importers to carefully review the methods utilized and make necessary adjustments. Subsequently, in a letter addressed to the Customs representative dated November 4, 1975 (after the verification had commenced), protestant's Customs counsel objected to the scope of the inquiry, specifically with regard to investigation of the methods and systems used by protestant. It was counsel's view that such inquiry exceeded the limits of the Customs representative's authority. The scope of the verification was sustained by the Commissioner of Customs in a letter dated December 9, 1975. The verification continued until issuance of the final report in May 1977. The report was analyzed by the involved import specialist, and liquidation of the subject entries commenced in July 1978.

Based on the scope of the verification, and the heavy backlog of cases faced by foreign Customs representatives during the years in question, protestant has not established that the delay in liquidation was in effect due to Customs negligence.

Protestant also contends that certain warranty costs, included by the appraising officer as part of statutory cost of production, are not properly includable because such costs consist of labor to be performed by protestant in the United States and spare parts which will be separately dutiable upon entry into the United States.

Our position with regard to the dutiability of warranty costs was set forth in detail in ORR ruling 76–0072 (file 72–024488 RG), dated July 15, 1976, as follows:

> In resolving this issue, it is first necessary to consider whether warranties, as a general rule, are to be considered a part of constructed value under section 402(d), Tariff Act of 1930, as amended. We are of the opinion that warranty charges should ordinarily be considered dutiable as a general expense usually reflected in the sale of merchandise for exportation to the United States. We would note initially that most jurisdictions recognize implied warranties in the absence of contrary contractual provisions and sometimes in spite of those provisions. Additionally, a warranty to replace defective parts is something which attaches to the merchandise itself. "American Jurisprudence" indicates that "'the term warranty is generally understood as an absolute undertaking in praesenti against the defect." 67 Am. Jur. 2d 587. We conclude, therefore, that a warranty, if "usual," may properly be considered a general expense. This conclusion is in accord with *United States* v. *Alfred Dunhill of London, Inc.*, C.A.D. 305 (1945), where the court stated: "In our opinion the 'usual general expenses' of a business are the expenses of doing business * * * and profit is calculated on the difference between such expenses and receipts."

In response to a similar argument that warranty costs consist of labor to be performed in the United States, we also pointed out in

the ruling that a warranty was not an after-sales service contract, but rather

> a guarantee that the manufacturer will produce a product free from defects, and that obligation can be completely satisfied by producing a product free from defects.

While we have held that certain costs of production of an unforeseeable nature may ne excluded from dutiable value, warranty costs obviously cannot be placed within this category. Further, it is well established that under the cost of production statute, usual general expenses are those actual general expenses of the manufacturer which are usual for him.

Under these circumstances, you are directed to deny the protests in full.

(C.S.D. 80-212)

Duty Assessment: Documentation To Establish Nondutiability of Quota Charge

Date: April 21, 1980
File: CLA-2: RRUCV DA/RP 055267

Re Application for further review of protest No. 1001-8-002161.

AREA DIRECTOR OF CUSTOMS,
U.S. Customs Service, New York Seaport,
New York, N.Y.

DEAR SIR: The referenced protest, dated February 23, 1978, was filed by (name of law firm), counsel for the importer (name of importer), challenging the inclusion of an alleged quota charge of $4 (U.S.) per dozen in the appraised value of the merchandise.

Issue.—Has the protestant provided sufficient evidence to substantiate its claim that the alleged quota charge does not form part of the dutiable value of the imported merchandise?

Facts.—The protestant purchased knitted sweaters from a manufacturer in Hong Kong. The export of such merchandise is subject to export quotas administered by the Government of Hong Kong. It is alleged that the manufacturer, not possessing the required amount of export quota, obtained the necessary amount of quota from third parties. In support of the protestant's contention that the export quota was obtained from third parties, the following documents have been submitted to the Customs Service:

(1) Copies of the official Hong Kong Transfer Application indicating the transfer of quota to the instant exporter.

(2) A copy of the Hong Kong Export License indicating that the exporter possessed the required export quota.

The protestant contends that the exporter purchased the export quota from third parties at a price of $4 (U.S.) per dozen. In support of this position, the protestant has submitted the following:

(1) The signed statements of the exporter certifying that the quota used for this shipment was purchased from third parties at $4 (U.S.) per dozen.

(2) A copy of the order confirmation form indicating that the export of the merchandise was subject to a quota charge of $4 (U.S.) per dozen.

Counsel for the protestant has also submitted several memoranda of law and has argued extensively that the evidence of record is sufficient to establish the nondutiability of the alleged quota charges.

It is the opinion of the Area Director, New York Seaport, that the export of the instant merchandise was subject to a quota charge of $4 (U.S.) per dozen.

Law and Analysis.—In *United States* v. *Getz Brothers & Co.*, 55 CCPA 11, C.A.D. 927 (1967), which involved the appraisement of plywood from Japan, the Court of Customs and Patent Appeals held that payments for quota were nondutiable. The following language from the court's opinion has been quoted with approval in subsequent Customs Service rulings:

> * * * on some occasions, the export quota had to be paid for, and in other circumstances, it did not. Thus, such charges for a quota, which sometimes occurred, formed no part of the purchase price of the plywood for export, nor did it, in our view, within the statute, form any part of the costs, charges, and expenses incident to placing the merchandise in condition packed ready for shipment to the United States.

Subsequent to the *Getz* decision the Customs Service issued C.I.E. 17/72 (Apr. 5, 1972), which held that properly documented quota charged incurred in Hong Kong were nondutiable. The kind of documentation required to establish the nondutiability of the quota charges was left to the discretion of the appropriate import specialists. Subsequent rulings, for example C.I.E. 17/72, supplement 1, dated April 12, 1973, reaffirmed the principle that quota charges may be nondutiable. ORR Ruling 74–0337, dated December 13, 1974, set forth examples of transactions in which such quota charges may or may not be dutiable. The first example given in this ruling is directly applicable to the instant transaction:

> In the first instance, the manufacturer will have purchased his quota from a third party. In this situation, *if it can be demonstrated* that the quota charge merely represents a payment for securing the export quota from the third party, then it does not constitute a part of the freely offered price of the merchandise. In this situation, it is clear that the manufacturer is willing to sell

his merchandise for a price which does not include any additional amount for the quota charge. [Italic added.]

In demonstrating that the quota payment represents a payment for securing the quota from a third party, the importer must meet a dual burden. First, the importer must establish to the satisfaction of the import specialist that the quota used in the instant transaction was purchased from a third party. Second, the importer must demonstrate to the satisfaction of the import specialist the price paid to the third party for the transferred quota. For the purpose of this ruling, we will assume, without deciding, that the protestant has met the burden of establishing that the quota was obtained from a third party. Therefore, it remains to be seen if the protestant has met the second burden; i.e., establishing what, if any, price was paid for the quota.

ORR Ruling 74–540308, dated October 18, 1974, set forth certain requirements in order to satisfactorily establish a quota charge: "Such documentation must include a copy of the transfer of the quota, identifying both the purchaser and seller, and *a copy of the remittance* showing the amount involved in the transactions." [Italic added.] The protestant has not submitted copies of the remittance, but has provided statements by the manufacturer indicating from whom the quota was purchased and the amount paid for the transfer. The protestant urges that such statements constitute sufficient evidence for Customs to accept the alleged nondutiable quota charge. The protestant presents several arguments in support of its contention that Customs must modify its position, as set forth in ORR Ruling 74–540308.

First, the protestant contends that under the principle of impossibility, as set forth in *Nanco Inc.* v. *United States*, 40 Cust. Ct. 366, C.D. 2007 (1958), the evidence requested by Customs is impossible to obtain, and therefore, Customs must accept any reasonable evidence of quota payments. In *Nanco*, the issue of impossibility arose through the failure of the importer to provide a certificate of exportation. However, the absence of the certificate of exportation was due to the refusal of the Customs collector to issue such a document. In the instant transaction, it is not Customs refusal to supply information which has resulted in noncompliance with ORR Ruling 74–540308 by the importer. The exporter has failed to supply information that is within its power to obtain. Additionally, it is to be noted that, in other transactions involving different parties, full compliance with ORR Ruling 74–540308 demonstrates that such information as is required by Customs is not impossible to obtain. Therefore, the principle of impossibility relied upon by the protestant is inapplicable to the instant transaction.

The protestant also contends that Customs must utilize section 500 of the Tariff Act of 1930, as amended (19 U.S.C. 1500(a)), to

"* * * ascertain or estimate the value (of the quota charge) by all reasonable ways and means." Section 500 grants an appraising officer authority to use all his skills, experience, and discovery resources in a reasonable manner to appraise merchandise. Section 500 is *not* an additional basis upon which to appraise merchandise when the methods under section 402 or 402(a) have been exhausted, but is applicable to all modes of appraisement under these sections. The protestant maintains that the import specialist has the information necessary to determine if the alleged quota charge is sufficiently documented and accurate. However, it is the very nature of the market for quota in Hong Kong which requires that Customs maintain its present evidentiary requirement. The Hong Kong Government allocates quota to a number of firms, without charge, at the beginning of each year. Subsequent transfers of quota take place throughout the year. The price, if any, at which such quota may be transferred vary from day to day and from manufacturer to manufacturer. It is because of this uncertain price structure of the quota market that Customs must rely upon verifiable evidence in the form of remittances showing the exact amount involved in the specific transactions.

With respect to the evidentiary value to be afforded affidavits, the protestant relies on Headquarters' ruling C.I.E. 36/75, re: I.A. No. 182/76 of April 12, 1977. In I.A. No. 182/76, March 6, 1977, Customs stated:

> (I)t is our opinion that where responsible officials of importers and manufacturers have furnished affidavits to the Customs Service and the statements in the affidavits have not been contradicted by other evidence, those affidavits should be accorded considerable evidentiary value in Customs Service determinations.

The cited ruling was issued in connection with a Customs Service ruling on the dutiability of buying commissions. The ruling noted that, "it is well established that, in determining whether or not a buying agency actually exists, each individual case must be determined on the basis of its own particular facts and circumstances." See *United States* v. *Knit Wits (Wiley) et. al.*, 62 Cust. Ct. 1008, A.R.D. 351 (1969). In those transactions where Customs has accorded considerable evidentiary value to affidavits, additional evidence corroborated the contents of the submitted affidavits. In the instant case, the protestant has submitted a notice of confirmation from the exporter to the importer to corroborate the exporter's affidavits. Such evidence is inadequate to corroborate the affidavits of the exporter.

Therefore, in the absence of full compliance with ORR Ruling 74–540308, the exporter's affidavits are not sufficient to establish the nondutiability of the alleged quota charges.

Holding.—The protestant has not submitted the evidence required by ORR Ruling 74–540308 to establish the nondutiability of

the alleged quota charges. Furthermore, the evidence that has been submitted by the protestant is insufficient to satisfactorily establish the nondutiability of the alleged quota charges. Therefore, you are directed to deny protest No. 1001-8-002161.

(C.S.D. 80-213)

Export Value: Includability of Warranty and After-Sales Service Costs

Date: April 13, 1979
File: R:CV:V BNS
541978

This is in reference to your memorandum dated August 4, 1977, and September 29, 1978, and your letter dated November 13, 1978, on behalf of your client (name of client), the importer, concerning the dutiable status of certain warranties and after-sales services bought by the importer in connection with its purchase of RB-211 Rolls Royce aircraft propulsion systems for installation in its L-1011 aircraft. A previous ruling (R:CV:V 540410 LLR, dated Mar. 25, 1977) had concluded that the propulsion system should be appraised under export value as defined in section 402(b), Tariff Act of 1930, as amended. Your current request for a ruling was prompted subsequent to the above determination, when Customs officers in Los Angeles decided that the cost of certain of the RB-211 contract terms which you characterized as warranty and after-sales services were properly includable in the export value of the propulsion system.

Your memorandum dated August 11, 1977, concludes that the cost of the above provisions is not properly a part of the export value of the propulsion systems because: (1) they constitute incidental services or expenses which were optionally selected by the purchaser, (2) the cost of these services or expenses is separable from the price of the merchandise per se and can be separately identified, and (3) they are incidental costs and services which accrue after the merchandise is exported. You correctly state that all of the above criteria have been used by the courts in previous cases for determining whether various costs, charges, and expenses are to be included in the export value of imported merchandise.

Your supplemental memorandum dated September 29, 1978, cites a recent Court of Customs and Patent Appeals case, *Imperial Products, Inc.* v. *United States*, 65 CCPA ——, Cust. Bull., March 1, 1978, at 48, C.A.D. 1203 (1979), *aff'd.* 77 Cust. Ct. 66, C.D. 4672 (1976), as indicating that in order to prove that a cost is not part of the export value of an article, an importer need only show that "the disputed charge is *not* part of the selling price by simply showing what the cost *is* for." Although we are in basic agreement with your interpretation of the

case, we believe that the royalty in *Imperial* was found not to be a part of the export value of the merchandise involved, not only because the appellee showed what the cost was for, a manufacturing license under a patent to make and sell a complete "miracle brush" in the United States, but also because the importer separately showed "that it [the royalty] was not part of the price and why. * * *" *Imperial*, Cust. Bull. March 1, 1978, at 53. Accordingly, one method of proving that a cost is not part of the export value of merchandise is by showing that the charge is not part of the price, why it is not part of the price, and what it was for. Additionally, although the court in *Imperial* focused on the purchase price of merchandise in determining whether a charge was part of its export value, the decision indicated that other criteria might be used for determining whether a disputed charge was part of the export value of an article. One such test to which the court specifically referred, involved whether it could be shown that the merchandise in question had been freely sold or offered for sale to all purchasers at prices which did not include the disputed charge. We are, therefore, of the opinion that several tests exist for proving that a cost or charge is not properly part of the export value of merchandise, and that the two tests specifically mentioned in *Imperial* (the freely sold test and the purchase price test) substantially conform to the first two arguments in your memorandum of August 11, 1977. We are additionally of the opinion that the real importance of the *Imperial* decision is that the court indicated that the tests used for proving a cost not to be part of the export value of merchandise are exclusive, i.e., that as the result of using any one test, a particular cost can be eliminated from the export value of an imported product.

Your letter dated November 13, 1978, is the latest correspondence received by us from you concerning the valuation of the RB-211 propulsion systems. In your letter you identify the provisions which you wish us to consider in our ruling and indicate that they are contained in articles 4, 11, 13, 14, 15, and 27, and exhibits F and J of the Basic Agreement and Terms of Business (the Agreement) entered into between the importer and (exporter). You briefly summarize those items which you believe to be most salient, characterizing each as either part of the warranty or the after-sales services as follows:

WARRANTY

Article 11 of the Agreement provides for a warranty by (exporter) both to (importer) and (importer)'s customers against the breakdown of the propulsion system and parts, and deterioration due to defects in design, materials or workmanship. Additionally, the warranty provides for a joint effort in the United States by (exporter), its customer airlines, and (importer) to upgrade the quality and efficiency of the propulsion system through the use of "campaigns."

AFTER-SALES SERVICE PROVISIONS

Article 27:

(1) Provides for (exporter)'s maximum costs parts guarantee under which (exporter) agrees to sell spare parts over a 10-year period at a set increase in value and pursuant to which (exporter) agrees to sell spare parts to (importer) and its customers for as long as they are required.

(2) Provides that (exporter) will support (importer)'s launching and other airline customers' launching for the L–1011, including assurances of dispatched reliability and all reasonable corrective action if airline departures are consistently delayed because of faults in the system.

(3) Provides that (exporter) will make technical services available to L–1011 customers for as long as they are required.

(4) Provides that (exporter) and (importer) will cooperate to identify and resolve for the L–1011 customers any problems at the physical and functional interface between the system and the airframe.

Article 13, 14, and 15, and exhibit F

(1) Provide for (exporter) to supply large numbers of copies of technical manuals relating to the propulsion system and its servicing, and to periodically make revisions in the manuals.

(2) Provide that (exporter) will supply repair schemes, drawings, training aids, and other data required by the airlines, and that (exporter) will cooperate with (importer) in preparing an airline publication covering the entire L–1011 aircraft.

(3) Provide that (exporter) will contribute to the marketing of the L–1011 and propulsion system by contributing $4,000 for each aircraft purchased to the buyer.

(4) Provide that (exporter) make engineering and service representatives available to train and advise the airlines and (importer) concerning the propulsion system.

(5) Provide that (exporter) will continually maintain the Federal Aviation Administration certification for the propulsion system.

(6) Provide that (exporter) will maintain a west coast facility to support the airplane flight test and manufacturing programs.

(7) Provide that (exporter) incur the expense for product liability, and to indemnify its customers against claims resulting from infringement of any patents through the use or operation of the engines.

Although you have characterized each of the purchased provisions as either part of the warranty or after-sales services, we do not agree with all of your characterizations.

Additionally, no matter how a provision is characterized for purposes of determining whether it is to be included in the export value of merchandise, it is our opinion that it must be scrutinized by applying the various tests outlined previously.

In this regard, it is our opinion that the costs listed below are properly part of the export value of the merchandise:

(1) All costs covered under article 11 of the agreement.

(2) The cost of acquiring and maintaining the FAA certification for the propulsion system.

(3) The cost of product liability, etc.

We will not here attempt to explain why only these costs and no others are part of the export value of the merchandise, except to state that we find that those costs not included in the export value have been found not dutiable under the three tests previously mentioned.

All of the costs listed above were previously considered by us in ruling letter 72–024488 dated April 12, 1976, a copy of which is enclosed, to be elements of constructed value. Although the instant case involves export value, much of the reasoning in ruling 72–024488 is applicable to the instant case.

COST OF ACQUIRING AND MAINTAINING THE FAA CERTIFICATION

It is our current impression that the acquisition of an airworthiness certificate is a legally mandated prerequisite for an aircraft to be successfully manufactured for, or used in, domestic air commerce. Accordingly, it is our opinion that the acquisition of an airworthiness certificate is so intimately bound up with the manufacturing process that it is not separable from the price of the merchandise per se, that it is not a cost which is capable of being optionally borne by the buyer, and that it is not an incidental cost or service which accrues after the merchandise is exported.

In this regard, it could be argued that the cost of maintaining the airworthiness certificate might be separated from that for its original acquisition and that, therefore, one or more of the previously stated tests for excluding a cost element from the export value of merchandise has been met. Although it is theoretically possible that the merchandise in issue could be sold or offered for sale at a price not including the cost associated with maintaining the airworthiness certificate, the inquirer has not alleged either that such sales have previously been made with respect to the particular merchandise in issue or any other aircraft, or that actual offers (price quotations) were made minus the cost of maintaining the certificate. Instead, it has submitted documents from its various customers which merely indicate that they always had the option of negotiating for the aircraft minus any particular cost elements. Furthermore, for the manufacturers to acquire a certificate for the aircraft over the entire life of its production run, they are required to make many of the same changes that the airlines would be required to make for the maintenance of the certificate.

It therefore seems likely that it might be economically unwise for the air carriers to expend resources on aircraft in service which the manufacturers will be required to expend on newly produced merchandise. Stated another way, it is reasonable to assume that the air carriers will find it economically wise to have the manufacturers perform the functions necessary for the maintenace of the certification. We, therefore, are of the opinion that the maintenance of the certification has not been shown to be a cost which is capable of being borne at the option of the buyer.

Like the original acquisition of the certification, because its maintenance is legally mandated and also because it is a function which may not be capable of being performed by the air carriers, we are of the opinion that it is not separable from the price of the merchandise per se. And although the services for the maintenance of the certification might be performed subsequent to an aircraft's exportation, they can hardly be labeled as "incidental."

ARTICLE 11 COSTS

The provisions contained in article 11 relate generally to the rectification of defects in the propulsion system by (exporter). Specifically, (exporter) has made certain promises with respect to the breakdown of the propulsion system and parts and its deterioration due to defects in design, materials, and workmanship. Additionally (exporter) (importer), and the aircraft purchasers have agreed to upgrade the quality and efficiency of the propulsion system through the use of campaigns.

In regard to the above provisions the inquirer states that "the warranty contained in exhibit I is not of that kind generally expressed or implied which a buyer could enforce under the *Uniform Commercial Code*," and that "except for this warranty (exporter) has no other obligations and liabilities, for any defects and failures of any engine or part or other item manufactured, or supplied or inspected by (exporter)". It is also stated that the warranty provision is unusual because there will be a joint effort in the United States by (importer), the air carriers, and (exporter) to upgrade the quality and efficiency of the propulsion system.

In ORR Ruling Letter 72–024483, we stated that most jurisdictions recognize implied warranties in the absence of contrary contractual provisions and sometimes in spite of those provisions. We also stated that promises to replace or repair defective parts attach to the merchandise itself. Although we note that the warranty provision contained in the agreement (as well as warranty provisions in general) may have been the subject of negotiation, that some elements thereof may have been optionally included therein, and that as the result of the above, the warranty coverage may have been expanded beyond that normally mandated by law, we are not in any position to judge

which elements of the warranty were optional. However, we can make an informed judgment concerning whether the warranty contains provisions which appear to be highly unusual. In this regard, the inquirer characterizes the promises to upgrade the quality of the propulsion system through the use of campaigns as unusual. However, it is our opinion that this cost element may properly be summarized as a promise by the propulsion system manufacturer to replace defective parts with improved or redesigned parts as necessary. It, therefore, appears that the campaign cost element is no different than similar contract provisions which are usual in other industries.

As previously explained, the provisions of article 11 attach to the merchandise itself. It, therefore, is our opinion that its cost is not separable from the price of the merchandise per se. And although portions of article 11 may have been bargained for optionally, because we are in no position to judge which portions were optional and because none of the provisions strikes us as being particularly unusual, we are unable to state that the article 11 provisions should not be considered as part of the export value of the merchandise under consideration. Additionally, even though the addition and replacement of parts and services may be performed after the exportation of the merchandise, far from being incidental to the propulsion system, the fulfillment of the promises contained in article 11 is essential to the propulsion system and aircraft performing their stated functions. Accordingly, the article 11 warranty costs are properly part of the export value of the propulsion system.

COST OF PRODUCT LIABILITY, ETC.

You indicated that the basic agreement provides that Rolls Royce will incur the expense for product liability. Rolls Royce will also indemnify its customers against claims, damages, liabilities, etc., resulting from the infringement of any patents through the use or operation of the engines. Product liability expenses and claims resulting from patent infringement are liabilities arising not out of contract law, but under the law of torts. Accordingly, these expenses should be viewed against the body of law under which they were created.

With regard to the assumption of product liability costs by Rolls Royce, over the last several decades the courts have continually expanded the responsibilities of manufacturers under the law of negligence. The concept has come to be known as strict liability in tort. *Restatement of Torts, Second,* section 402A, sets forth the legal principles involved and notes in comment (b) that recent court decisions "have extended the rules of strict liability to cover the sales of any product which, if it should prove to be defective, may be expected to cause physical harm to the consumer or his property." In relation to the

agreement provision, comment (m) to section 402A states that: "The consumer's cause of action does not depend upon the validity of his contract with the person from whom he acquires the product, and it is not affected by any disclaimer or other agreement whether it be between the seller and his immediate buyer, or attached to and accompanying the product into the consumer's hands." In short, the agreement provision in which (exporter) assumes the cost of product liability adds nothing to the responsibilities with which it is already charged under the theory of strict liability in tort.

Section 271 of the Patent Act of 1952 provides that:

> (a) Except as otherwise provided in this title, whoever without authority makes, uses, or sells any patented invention within the United States during the term of the patent therefor infringes the patent.

Accordingly, if in manufacturing or selling the propulsion systems involved, (exporter) should infringe a patent, a remedy therefor is provided by the Patent Act, notwithstanding whatever contractual agreements were made by (exporter) and (importer).

In summary, although the possible liability of the manufacturer is specifically adverted to in the agreement, nothing has been presented showing that the manufacturer would not be liable under U.S. law for the costs mentioned therein were they omitted therefrom.

It follows from the above discussion that the costs associated with products liability and patent infringement are part of the price of the merchandise per se, are not capable of being optionally bargained for, and are not incidental expenses which accrue after the export of the merchandise, because they are costs which stem directly from the manufacture of, and defects in, the merchandise; because the liability is imposed under law and not on account of any provision in the agreement, and, because the remedies involved may impose substantial costs on the party at fault, which liabilities, though accruing after the merchandise was imported, come about as the result of the condition in which the merchandise was imported.

(C.S.D. 80-214)

Cost of Production/Constructed Value: Testing and Programing Costs

Date: November 27, 1979
File: R:CV:V BS
061629

Issue.—Whether certain costs incurred by a U.S. manufacturer in connection with the "marriage" of a CNC to a numerically controlled machine tool are dutiable.

Facts.—The importation consists of a particular type of machine tool produced in West Germany with the use of a U.S. manufactured

computer numerical control. The CNC was "married" (trade name) to the machine tool with the aid of services performed in West Germany by an employee of the U.S. manufacturer. In addition to these "marriage" costs, further expenditures were incurred by the U.S. manufacturer for the loading of instructions into the control unit in the United States with orders that run the machine.

It is the importer's opinion that the CNC programing costs are not dutiable since the CNC merely programs the machine and has nothing to do with the machine's manufacture. Further, the importer contends that the costs incurred in connection with the services performed overseas by its employee are similarly nondutiable, since the employee's function was merely to check out the performance of the machine.

On the other hand, it is the opinion of your office that these charges are dutiable for the reason that they are intimately connected with the manufacture and testing of the machine.

Law and analysis.—The general principle of law involved is that all expenses necessary to the manufacture of fabrication of a product are dutiable, without regard to whether such expenses are borne by the buyer. See *United States* v. *Cavalier Shipping Co., et al.*, C.A.D. 965 (1969), and *Goodrich-Gulf Chemicals, Inc.* v. *United States*, R.D. 11733 (1971). The dutiability of testing costs, as an incident to the manufacturing process, has frequently been the subject of judicial discourse. Thus, in *Goodrich-Gulf, supra*, the court held that testing costs are dutiable to the extent such costs are a necessary incident to the production or perfection of the manufactured product. In holding the testing costs involved in that case to be dutiable, the court noted that the tests were "inextricably bound up in the manufacturing process." See also *Pantation Trading Company* v. *United States*, A.R.D. 181 (1965), where the court found dutiable inspection and testing costs which constitute a genuine contribution to the manufacturing process and which affect the "per se character" of the goods.

In ORR ruling 76–0070, dated April 9, 1976, the importer furnished personnel to the manufacturer in order to participate in the testing of certain machines. During the testing process, the employees advised the manufacturer as to certain necessary adjustments to the machine to be made in order to meet contract specifications. We held in that case that the participation by the importer's employees contributed to the perfection of the product and was a necessary cost of manufacture. Therefore, the involved expenditures were dutiable costs of fabrication.

A similar finding was made in internal advice 57/77 (541457, dated June 30, 1977), which involved a situation analogous to the instant case, i.e., the "marrying" of an American-made numerical control to a machine tool. The U.S. employee in that case also aided

the foreign manufacturer in "marrying" the control to the machine tool. The ruling also held in effect that the cost of the hook-up, "marriage," or assembly of the American-made numerical control to the machine tool is an integral step in the manufacture of the numerically controlled machine tool.

While the type of software involved in internal advice 57/77 (numerical control, "NC") is somewhat different from the software involved in the instant case (computer numerical control, CNC), in either case the machine tool involved could not function without the appropriate control. In other words, the development of the software, the CNC in this instance, is essential to the development of the machine tool, and is the product of the technology exchange between the manufacturer of the machine and the manufacturer of the control. The subject CNC is specifically developed for use with the imported machine tool.

Holding.—The overseas check-out performed by the importer's employee and the development of the CNC programing are steps in the manufacture of the machine tool. Accordingly, such costs are necessary to the fabrication of the imported product and are dutiable.

(C.S.D. 80–215)

Value: Assists Furnished to Manufacturers in Different Foreign Countries

Date: January 8, 1980
File: RRUCV RP
542019

This is in reference to your letter of August 10, 1979, in which you request a ruling concerning the proper method of amortizing assist costs in the form of artwork, graphics, engineering, tooling, and research and development.

You state that the U.S. importer plans to enter into a contract to purchase merchandise from a Japanese supplier. This supplier has a wholly owned manufacturing facility in Taiwan. The contract between the importer and Japanese concern is called a requirements specification package, and contemplates that production quantities will be manufactured in Taiwan after initial samples have been produced and exported by the Japanese supplier. The production of the initial samples are necessary to enable the importer to determine if the merchandise meets quality requirements.

You indicate that, hypothetically, a typical provision in the contract between the importer and the Japanese supplier would provide for a prototype production of 400 units in Japan, followed by Taiwan

production of 250,000 units. These contracted-for amounts would be known at the time orders for merchandise were placed. You also state that in addition to the manufacture of prototypes, the Japanese concern may engage in the manufacture of production quantities (i.e., concurrently with production in Taiwan). Such production would involve a definite minimum number of units to be produced, and would be accounted for in the contract between the importer and the Japanese supplier.

You also state that the importer and Japanese concern are not related, other than as purchaser and seller, and that the price for the subject merchandise includes all elements of value, except the cost of the above-mentioned undisputed assists, which are provided to the Japanese supplier by the importer. Your request for a ruling concerns the proper method of allocating the costs of such assists.

In *United States* v. *Border Brokerage Co. Inc.*, A.R.D. 288 (1971), the U.S. Customs Court held that assist costs may be allocated over the number of units to be definitely produced. This includes units not exported into the United States. However, it is well established in Customs practice that, subject to certain limitations, an assist used in the production of imported merchandise will be dutiable in full each and every time it is furnished to a different overseas manufacturer in the same or different country. This principle is in keeping with the decision in *Ford Motor Company* v. *United States*, 29 Cust. Ct. 553, A.R.D. 9 (1952), wherein the Customs Court stated, "it is not the manufacturer's actual cost but the actual cost of manufacture," which must be ascertained. See also, I.A. No. 341/75, dated April 27, 1976.

It is clear that if the importer in the case before us furnished the subject assists to a Japanese manufacturer and also to an unrelated Taiwanese manufacturer, duty would have to be paid on the value of the assists provided to the Taiwanese manufacturer, even though the assists may have been fully amortized on importations from the Japanese manufacturer. However, the case you describe presents a different set of circumstances.

You state that the contract in the contemplated transaction is between the Japanese concern and the unrelated U.S. importer. The importer furnishes the subject assist only to the Japanese supplier. In turn, the Japanese concern does not sell, but rather transfers these assists to its wholly owned manufacturing facility in Taiwan for production purposes. You indicate that there is no contractual relationship between the importer and the Taiwanese manufacturer.

In light of the above, it is our opinion that the subject assist costs may be allocated over the total number of units to be definitely produced in both Japan and Taiwan, as set forth in the agreement between the importer and the Japanese concern.

Therefore, applying our finding to the sample transaction you describe, it would be permissible to prorate the assist costs over the total agreed upon quantities (i.e., the 400 sample units produced in Japan plus the 250,000 unit produced in Taiwan). The fact that the Japanese concern may engage in the manufacture of production quantities, as well as the development of sample units, would not change our position that proration would be allowed over the total agreed upon quantities, provided that the agreement between the importer and the Japanese concern specifies the number of units to be definitely produced in Japan and Taiwan.

It should be noted that our ruling is limited to the facts as presented in this particular case. We would reach a different conclusion if the Taiwanese supplier had contracted separately with the U.S. importer.

(C.S.D. 80–216)

Instruments of International Traffic: Equipment Used To Discharge and Transport Cargo From Vessels; "MAFI"

Date: January 23, 1980
File: BOR–7–07:RRUCDC
104390 MJN

The subject memorandum requests a ruling as to whether equipment used to discharge and transport cargo from roll-on/roll-off vessels is properly classified as instruments of international traffic within the meaning of section 10.41a, Customs Regulations.

The equipment you inquire about is referred to as a "MAFI." The MAFI is described as being made of steel, 40 feet in length by 8 feet in width, and has a total of 16 tires mounted at the rear of the equipment. The MAFI also has a metal tag attached to it indicating the country of origin, serial number, weight, etc., for easy identification. The attachments submitted with your request indicate that the MAFI is used to ship merchandise directly to the consignee or to a warehouse for unlading and sometimes relading of export merchandise.

Pursuant to a telephone conversation between a member of my staff, Ms. (name), and a member of your staff, Ms. (name), it was brought to our attention that the MAFI is not used as a trailer pulled by a tractor for purposes of section 123.14, Customs Regulations.

Section 10.41a(a)(1), Customs Regulations, states in part that lift vans, cargo vans, shipping tanks, skids, pallets, caul boards, and cores for textile fabrics, arriving (whether loaded or empty) in use or to be used in the shipment of merchandise in international traffic are hereby designated as instruments of international traffic within the meaning of section 322(a), Tariff Act of 1930, as amended.

The Customs Service has previously held that an article which is similar to an article designated as an instrument of international traffic may be entered or classified as an instrument of international traffic under the existing designation. The MAFI's described in your request for ruling are similar to the pallets and skids designated in section 10.41a(a)(1).

Therefore, we are of the opinion that the MAFI's are similar to a pallet or skid in design and use and may be released under the provisions set forth in section 10.41a.

(C.S.D. 80-217)

Instruments of International Traffic: High-Pressure Sealessm Cylinders

Date: January 25, 1980
File: BOR-7-07-RRUCDC
104411 MJN

This ruling concerns the classification of high-pressure seamless cylinders as instruments of international traffic.

Issues.—Are high-pressure seamless cylinders used to transport anhydrous hydrogen bromide classified as instruments of international traffic within the meaning of section 322(a) of the Tariff Act of 1930, as amended (19 U.S.C. 1322(a))?

Facts.—The inquirer recently purchased approximately 160 high-pressure seamless cylinders which are United States manufactured and serially numbered. The cylinders will be used to transport anhydrous hydrogen bromide gas from France to the United States.

These cylinders are composed of steel and measure approximately 50¾ inches in length by 8 inches in diameter with a neckring affixed to one end for safety purposes.

Law and analysis.—To qualify as an instrument of international traffic within the meaning of title 19, United States Code, section 1322(a), an article must be suitable for and capable of repeated use, and must be used in significant numbers in international traffic.

T.D. 66-184 designated metal cyclinders designed for the transportation of acetylene and gas ranging in height from 12 to 56 inches and in diameter from 2 to 12 inches as instruments of international traffic.

T.D. 71-35(2) designated steel cylinders of domestic manufacture measuring approximately 4 feet in length and 1 foot in diameter and used to ship fluorocarbon gas as instruments of international traffic.

T.D. 74–299 designated steel cylinders measuring 39 to 57 inches in height to 7 to 12 inches in diameter and used for transportation of propane and butane gas as instruments of international traffic.

The Customs Service has previously ruled that an article which is similar to an article designated as an instrument of international traffic may be similarly designated. The acticles designated in the referenced Treasury decisions are similar to the cylinders described in the request for ruling.

Holding.—The high-pressure seamless cylinders used to transport anhydrous hydrogen bromide gas are similar to those discussed in T.D. 66–184, 71–35(2), and 74–299, and may be released in accordance with the provisions of section 10.41a, Customs Regulations.

(C.S.D. 80–218)

In-Bond Carriers: Whether Canadian Motor Carriers Operating in the United States May Be Designated as Carriers of Bonded Merchandise

Date: January 24, 1980
File: BON-1-RRUCDBL
21207

Issue.—May Canadian motor carriers, operating under (1) temporary authority as common carriers in the United States; or (2) authority as motor carriers in foreign commerce within the meaning of 49 U.S.C. 10927(a)(2), be designated as carriers of bonded merchandise pursuant to section 18.1(a), Customs Regulations (19 CFR 18.1(a))?

Facts.—Canadian trucking firms that are unable to get full common carrier certification from the Interstate Commerce Commission (ICC) desire to be designated as carriers of bonded merchandise. The Canadian firms do not qualify as private carriers, freight forwarders, or contract carriers. However, in one case a firm has temporary authority (180 days) from the ICC to operate as a common carrier in the United States, and in a second case the firm has authority from the ICC to operate as a motor carrier in foreign commerce within the meaning of section 10927(a)(2) of the recodified act (49 U.S.C. 10927(a)(2))(formerly 49 U.S.C. 303(a)(11)). Generally, the trucking firms move merchandise from Canada to New York City for exportation, and return with a load from New York for exportation to Canada, although there may be variations. The majority of loads move under an entry for transportation and exportation in bond.

Law and Analysis.—Section 1551, title 19, United States Code, provides in part that:

> Under such regulations and subject to such terms and conditions as the Secretary of the Treasury shall prescribe—
>
> (1) Any common carrier of merchandise owning or operating a railroad, steamship, or other transportation line or route for the transportation of merchandise in the United States * * * upon application, may, in the discretion of the Secretary, be designated as a carrier of bonded merchandise for the final release of which from Customs custody a permit has not been issued.

Section 18.1(a)(1), Customs Regulations (19 CFR 18.1(a)(1)), provides in part that:

> Merchandise to be transported from one port to another in the United States in bond * * * shall be delivered to a common carrier * * *. For the purposes of this section, the term "common carrier" means a common carrier of merchandise owning or operating a railroad, steamship, or other transportation line or route.

For purposes of the Customs Regulations, a common carrier is a carrier owning or operating a railroad, steamship, or other transportation line or route which undertakes to transport goods or merchandise for all of the general public who choose to employ him. (19 CFR 112.1(c)).

Section 10102(2), title 49, United States Code, defines "carrier" to mean a common carrier and a contract carrier. Section 10102(4) defines "common carrier" to mean an express carrier, a pipeline carrier, a sleeping car carrier, a motor common carrier, a water common carrier, and a freight forwarder. Section 10102(10) defines a "motor carrier" to mean a motor common carrier and a motor contract carrier. Section 10102(11) defines a "motor common carrier" to mean a person holding himself out to the general public to provide motor vehicle transportation for compensation over regular or irregular routes, or both.

Section 10927(a)(2), which relates to security of motor carriers, provides in part that a motor carrier operating in the United States when providing transportation between places in a foreign country or between a place in one foreign country and a place in another foreign country shall comply with the requirements of sections 10329 and 10330 that apply to a motor carrier providing transportation subject to the jurisdiction of the commission under subchapter II of chapter 105 of this title. To protect the public, the Commission may require any such motor carrier to file the type of security that a motor carrier is required to file under paragraph (1) of this subsection. Sections 10329 and 10330 relate to service of notice and service of process and subchapter II, chapter 105 (sections 10521 ff) relates to general jurisdiction over transportation by motor carrier.

Section 10928, concerning temporary authority, provides in part that the ICC may grant a motor carrier temporary authority to provide transportation to a place or in an area having no motor carrier capable of meeting the immediate needs of the place or area. Unless suspended or revoked, the Commission may grant the temporary authority for not more than 180 days. A grant of temporary authority does not establish a presumption that permanent authority to provide transportation will be granted.

We are satisfied that Canadian motor carriers operating in the United States under temporary authority as common carriers or under authority as motor carriers in foreign commerce within the meaning of 49 U.S.C. 10927(a)(2) are common carriers authorized to operate as such by an agency of the United States.

We are further satisfied that a temporary authority to operate as a common carrier in the United States, granted by an appropriate agency of the United States, is sufficient to support designation as a carrier of bonded merchandise for the term of the grant provided all other requirements of section 112.12, Customs Regulations (19 CFR 112.12) arejmet.

The carrier's bond, Customs form 3587, is a continuing obligation, that is, one which is good until discontinued by one of the parties. In the case of a carrier granted temporary authority, we believe the bond must stipulate that approval of the bond is granted only for the term of the temporary authority unless the temporary authority is timely replaced by permanent authority. A suggested stipulation is as follows:

> This bond shall be discontinued upon expiration, suspension, or revocation of the temporary authority to operate as a common carrier in the United States unless the temporary authority is timely extended or replaced by permanent authority. Such discontinuance does not release either principal or surety from any liability which may have accrued prior to the date of discontinuance.

Notification to Headquarters of approval of the carrier's bond of a carrier operating under a temporary authority should make note of that fact.

Holding.—Canadian motor carriers, operating under (1) temporary authority as common carriers in the United States; or (2) authority as motor carriers in foreign commerce within the meaning of 49 U.S.C. 10927(a)(2), may be designated as carriers of bonded merchandise pursuant to section 18.1(a), Customs Regulations.

(C.S.D. 80-219)

Classification: Piping on Men's Reversible Jacket as Ornamentation

Date: January 30, 1980
File: CLA-2:RRUCMC
060888 BB

This ruling concerns the tariff classification of a men's reversible jacket.

Issue.—Whether the jacket is ornamented, for tariff purposes.

Facts.—The submitted sample is a men's reversible jacket. Both sides of the jacket have slash pockets, a rib knit collar and waistband, cuffed sleeves and a collar tab going through five loops. The blue side has zippered slash pockets with each zipper covered by a fabric welt, while the tan side has slash pockets without zippers or flaps. The jacket has piping measuring less than one-quarter inch in width extending along the entire seam holding the welting. Similar piping is found in the seams extending from the collar to the armpits. However, this piping does not extend the length of the seams. It is only found on the upper portions, ending approximately 4 inches above the armpits.

Law and analysis.—In order for a feature to constitute ornamentation, for tariff purposes, it must both be listed as a type of ornamentation in headnote 3, schedule 3, Tariff Schedules of the United States (TSUS), and perform a primarily decorative rather than utilitarian function. *Blairmoor Knitwear Corp.* v. *United States*, 60 Cust. Ct. 338, C.D. 3396 (1968).

The piping on the subject jacket meets both of these tests. Headnote 3 lists trimming and textile fabric as features which can constitute ornamentation. The piping is of textile fabric and also can be considered trimming. While the piping may marginally increase the strength of the seam in which it is sewn, this purpose is incidental to its primary function of increasing the eye appeal of the garment on which it appears.

Therefore, all of the piping on the sample jacket would ordinarily constitute ornamentation. However, the Customs Service developed over the years an established and uniform practice of not considering piping to be ornamentation if it is sewn into a seam and if it extends less then one-fourth inch beyond the surface of the fabric. This practice of classification developed because it was thought that piping inserted along the length of seams performed the structural function of increasing the strength of those seams. As indicated above, it has since become Customs' position that piping is primarily decorative. However, rather than instituting the formal procedures required by regulation to modify the established practice, Customs has chosen

instead to narrowly construe the exception to ornamentation created by the practice. For example, in Headquarters ruling letter (HRL) 053835, dated October 26, 1978, piping which was sewn over a seam rather than into a seam was held not to fall within the practice exception and, therefore, to constitute ornamentation.

Heretofore, the practice exception has only been applied to piping that extends along the entire length of a seam. The piping along the welting seams meets this requirement. The piping along the collar/armpit seams, however, does not extend along their entire length. This piping is only found along the upper parts ot the seams. We note that these are the most visible parts and, at the same time, the parts least subject to stress.

In light of our established position of narrowly construing the practice exception for piping, we choose not to extend the practice to cover piping extending along only part of a seam. Accordingly, the piping found along the collar/armpit seams on the subject jacket constitutes ornamentation for tariff purposes.

Holding.—The submitted sample, if in chief value of cotton, is properly classifiable under the provision for other men's or boys' wearing apparel, ornamented: of cotton, in item 380.00, TSUS, dutiable, as a product of Hong Kong, at the column 1 rate of 35 percent ad valorem.

(C.S.D. 80-220)

Instruments of International Traffic: Pipe Carrier Units Used To Transport Pipe

Date: February 1, 1980
File: BOR-7-07-RRUCDC
104451 MR

This ruling concerns whether certain pipe carrier units (PCU) qualify as instruments of international traffic.

Issue.—Whether pipe carrier units (described below) used to transport pipe qualify as instruments of international traffic within the meaning of section 322(a), Tariff Act of 1930, as amended (19 U.S.C. 1322(a)).

Facts.—The PCU's are described as holders, the component parts of which are all steel. The PCU's have an 8-foot long rectangular base (to facilitate movement by forklift or similar devices), attached to which are U-shaped steel bars. Between the upright bars are placed lengths of pipe banded together with steel bands. The purpose of the U-shaped bars is to prevent the stacks of steel pipe from rolling off the rectangular base.

The pipes will be stacked in PCU's and then transported to various European and Mexican ports for shipment to the U.S. ports of Port Everglades, Houston, New Orleans, Mobile, and Tampa. There are no other units of this type in international traffic. It is understood that the PCU's will not be used in domestic trade without prior entry and payment of duty, and that the units will remain in international traffic.

The units will be marked with the prefix PCR and will be numbered from 000001 to 001000, with the number of such units in use to approximate 1,000 once the operation is fully underway. The expected life-span of the units is approximately 8 years.

Law and analysis.—To qualify as an instrument of international traffic within the meaning of section 322(a), Tariff Act of 1930, as amended (19 U.S.C. 1322(a)), an article must be used as a container or holder. The article must also be substantial, suitable for and capable of repeated use, and used in significant numbers in international traffic.

T.D. 56243 states that boxes, bins, and racks, made of metal and wood, having as integral parts thereof feet, lugs, or skids, to facilitate movement by fork lifts and similar devices, are designated as instruments of international traffic and can be released under the procedures set forth in section 10.41a, Customs Regulations.

Holding.—We are of the opinion that the pipe carrier units are similar to those articles discussed in T.D. 56243 and may be released in accordance with section 10.41a, Customs Regulations. We are forwarding copies of this ruling to the ports of entry for their information.

(C.S.D. 80-221)

Warehouse: Eligibility of Rum From Puerto Rico

Date: February 7, 1980
File: CON-13-03:RRUEE
712315 M

Issue.—May Puerto Rican rum brought to the United States to be withdrawn as vessel supplies under section 309 of the Tariff Act be entered in a Customs bonded warehouse?

Facts.—In the past, Puerto Rican rum brought to the United States to be withdrawn as vessel supplies has been allowed to be placed in a Customs bonded warehouse. Recently, Customs Service Headquarters issued a ruling (C.S.D. 79-420) which provided that since Puerto Rican rum is neither subject to Customs duties nor internal revenue tax, it is ineligible to be entered into a Customs bonded warehouse. C.S.D. 79-420 involved a situation whereby the inquirer

wished to place Puerto Rican rum in a Customs bonded warehouse in Puerto Rico for exportation to a foreign country. The District Director of Customs at Los Angeles asks if this ruling is to be applied to Puerto Rican rum brought to the United States to be ultimately withdrawn as vessel supplies under section 309 of the Tariff Act.

Law and analysis.—Section 557 of the Tariff Act of 1930, as amended (19 U.S.C. 1557), provides that merchandise subject to duty, with certain exceptions, is eligible for warehousing in a Customs bonded warehouse. Section 101.1(i) of the Customs Regulations (19 CFR 101. 1(i)), defines duties as "Customs duties and any internal revenue taxes which attach upon importation."

Section 309 of the Tariff Act of 1930, as amended (19 U.S.C. 1309), in pertinent part, provides that articles subject to Customs duties or internal revenue taxes may be withdrawn from a Customs bonded warehouse as vessel supplies under certain specified conditions free of such duties or taxes.

26 U.S.C. 7652(a), provides that, except for certain specified exceptions, articles of merchandise of Puerto Rican manufacture coming into the United States and withdrawn for consumption or sale shall be subject to a tax equal to the internal revenue tax imposed in the United States upon the like articles of merchandise of domestic manufacture.

Therefore, it is our opinion that Puerto Rican rum imported to the United States to be withdrawn for use as vessel supplies under section 309 of the Tariff Act may be entered in a Customs bonded warehouse because such merchandise by its importation to the United States is subject to internal revenue tax. C.S.D. 79–420 prohibits the entering of Puerto Rican rum in a Customs bonded warehouse in Puerto Rico since it is not subject to Customs duties or to internal revenue tax.

Holding.—Puerto Rican rum brought to the United States to be withdrawn as vessel supplies under section 309 of the Tariff Act may be entered in a Customs bonded warehouse.

(C.S.D. 80–222)

Conditionally Free Merchandise: Merchandise Entered Under Item 832.00, TSUS, As Emergency War Material

Date: February 8, 1980
File: ENT–1–01–RRUEE
712339 M

This ruling concerns the eligibility of certain merchandise for duty-free entry under item 832.00, Tariff Schedules of the United States (TSUS).

Issue.—The question presented in this case is what action, if any, should be taken by the district director when his port receives with an importation of merchandise the certification of the procuring Department of Defense agency that the merchandise is "emergency war material," but the district director believes that the merchandise involved does not qualify as such under that agency's governing regulations.

Facts.—In the past, the Corps of Civil Engineers has imported certain turbine components to be used at a dam in the United States for the production of hydroelectric power apparently for civilian use only. Such merchandise was classified in a provision outside of schedule 8 of the Tariff Schedules, and duty was paid on such merchandise. Due to a reorganization of purchasing functions, this type of merchandise is now being imported by the Defense Logistics Agency for the Corps of Civil Engineers. The Defense Logistics Agency, on a recent importation of such turbine components, has certified that this merchandise qualifies as emergency war material and has entered this merchandise under item 832.00, TSUS, the duty-free entry provision for emergency war material. The district director of the port of entry involved questions whether such merchandise qualifies as emergency war material, as defined in 32 CFR, part 6, and entitled to duty-free entry under item 832.00, TSUS.

Law and analysis.—Item 832.00, TSUS, provides that articles for military departments certified to the Commissioner of Customs by the authorized procuring agency to be emergency war material purchased abroad is entitled to duty-free entry. 32 CFR, part 6 sets forth the definition of emergency war material. Section 10.102(b) of the Customs Regulations (19 CFR 10.102(b)), sets forth the certification requirements.

A similar question, as the one raised in this case, was submitted to the Attorney General by the Secretary of the Treasury in a letter dated August 13, 1943. The issue in that case was framed as follows:

> Whether importations which are made pursuant to the provisions of [the predecessor to item 832.00. TSUS, and section 10.102, Customs Regulations] are in fact, importations of war material entitled to duty-free entry or whether the Collector may rely on a certificate made in accordance with [the predecessor to section 10.102, Customs Regulations].

It was the opinion of the Attorney General that the predecessor of item 832.00, TSUS, made it the function of the procurement office to determine whether the imported merchandise constitutes war material within the meaning of the act. The opinion further states that:

> When any such officer has determined that the material being imported is a war material entitled to duty-free entry under the statute and has executed the certificate provided for [under the predecessor to section 10.102(b), Customs Regulations] the

Customs officials are not required to make an independent determination of the matter, but may rely upon the determination made as embodied in the certificate—40 Opinions of the Attorney General 283 (1943).

We have construed this opinion to permit Customs officials to allow merchandise to be entered duty free under item 832.00, TSUS, whenever the material has been properly certified by an authorized procurement officer of the Department of Defense and there has been compliance with the pertinent Customs Regulations. I.A. 76–169, 048978, dated January 18, 1977.

However, the district director, in his capacity as the senior Customs official in the area, would not be precluded from bringing what he perceives to be a discrepancy in the application of title 32 of the Code of Federal Regulations to the attention of the responsible management officials in the procuring agency and requesting their further consideration as to whether the article involved qualifies as emergency war material. The district director shall follow the recommendation made by the procuring agency after its further consideration of this matter, since that agency is primarily responsible for determining whether an article qualifies as an emergency war material.

Holding.—If the district director has reason to believe that the imported article does not qualify as emergency war material, even though such article has been certified by the procuring agency as such, he may bring this matter to the attention of the procuring agency and request its further consideration on this matter. In such instances, the district director shall follow the recommendation made by the procuring agency after it has further considered the matter.

(C.S.D. 80–223)

Classification: Replicas of Spacecraft in Movie "Star Wars"; Models

Date: February 8, 1980
File: CLA–2:RRUCGC
055398 c

The specific vehicles involved are the X-wing Fighter, Tie Fighter, and the Land Speeder. These vehicles are replicas of the spacecraft used in the movie "Star Wars."

The inquirer maintains that the subject vehicles are classifiable under the provision for other models, in item 737.15, Tariff Schedules of the United States (TSUS).

Issue.—Whether the merchandise is classifiable as claimed by the inquirer or is classifiable under the provision for other toys, not specially provided for, in item 737.95, TSUS.

Law and Analysis.—Schedule 7, part 5, subpart E, headnote 2, TSUS, provides that "For the purposes of the tariff schedules a 'toy' is any article chiefly used for the amusement of children or adults."

The superior heading to items 737.05 through 737.15, TSUS, provides in part for "model trains, model airplanes, model boats, and other model articles, *all the foregoing whether or not toys* * * *." [Italic added.]

A model is a representation of a particular object having either a present or prior physical existence, a contemplated future existence, or an existence in plans or drawings, literature, or folklore.

In the case of *Lohzin & Born* v. *United States*, 79 Cust. Ct. 34, D.C. 4710 (1977), the court suggested that to come within the common meaning of the term "model," an article need not be an exact or accurate representation of something in existence. It is sufficient if it is more than a crude form of a class of articles and recognizably represents an article that existed in fact or legend.

In the case of *Arthur R. Sawers* v. *United States*, 60 Cust. Ct. 593, C.D. 3467 (1968), the court in holding that model boats of superior quality and craftsmanship were classifiable as models under item 737.15, TSUS, very liberally construed that provision stating "that item 737–15 in providing for model boats encompasses all forms of model boats irrespective of value, quality, or craftsmanship."

The inquirer maintains that the term "existed in fact" can be encompassed by existence in a movie. We are unable to accept such a theory because the vehicles in issue never had an existence in reality. A mere existence on the screen does not equate to existence in fact.

The inquirer also states that the vehicles involved exist in legend. Webster's New Collegiate Dictionary defines the term legend as "a popular myth of recent origin" and myth as "a person or thing having only an imaginary or unverifiable existence". It should be noted that other dictionaries are not in agreement with the cited definition. The American College Dictionary defines legend as "a nonhistorical or unverifiable story handed down by tradition from earlier times and widely regarded as historical." The Oxford English Dictionary uses "An unauthentic or nonhistorical story; especially one handed down from earlier times and widely regarded as historical."

Even though the dictionary definitions stated above are not in complete agreement as to the definition of the word "legend," we believe that the vehicles depicted in the movie "Star Wars" can be validly described as legendary.

It has been established that prototypes of the instant vehicles did and probably still do exist as studio mockup models for shooting the film "Star Wars". These vehicles are actually models of the studio

props. An examination of the models reveals that they are very detailed and are not crude replicas of the studio props.

Holding.—The "Star Wars" vehicles including the "X-wing Fighter," "Tie Fighter," and the "Land Speeder" are classifiable under the provision for other models in item 737.15, TSUS, and currently dutiable at the rate of 16.3 percent ad valorem or entitled to free entry under the Generalized System of Preferences, if qualified.

(C.S.D. 80-224)

Classification: Aquarium Nets

Date: February 8, 1980
File: CLA-2-RRUCGC
060802 MH

This ruling concerns the classification of aquarium nets, products of either Korea or Taiwan.

Facts.—No sample of the merchandise is presented. The merchandise is described only as "aquarium nets" of the type used in the home or in pet shops. The instant merchandise is stated to be in chief value of manmade fibers.

Issue.—Whether the instant merchandise constitutes a fishing net for tariff purposes.

Law and Analysis.—The Customs Service has developed an established and uniform practice to classify aquarium nets in chief value of manmade fibers under the provision for fish netting and fishing nets in item 355.45, Tariff Schedules of the United States (TSUS). *See* T.D. 56007(21) and Headquarters Ruling Letter 034817.

In a very recent case, however, the U.S. Customs Court held that decorative fish netting used for display purposes was not classifiable under the provision for fish netting and fishing nets in item 355.35, TSUS. *Pier I Imports, Inc.* v. *United States*, — Cust. Ct. — C.D. 4819 (1979).

The court noted with approval the Government's contention that items 355.35 through 355.46, TSUS, were intended to encompass only commercial fishing nets and fish netting. The court concluded that as the merchandise at bar was not suitable for commercial fishing, the plaintiff had failed to sustain its burden of proof.

Section 152.16, Customs Regulations, provides that the principles of a court decision favorable to the government shall be applied to merchandise affected by such principles provided that the merchandise has been entered or withdrawn for consumption after 30 days from the date of the publication of the court decision. The publication of the court's decision is deemed adequate of a change in position.

The classification of the instant merchandise is clearly affected by the principles in *Pier I Imports*. Like the merchandise at bar, the instant merchandise is not suitable for commercial fishing.

The aforementioned uniform and established practice notwithstanding, the instant merchandise is not classifiable under the provisions for fishing nets, in item 355.45, TSUS.

Holding.—Assuming it is in chief value of manmade fibers, the instant merchandise is classifiable in item 386.09, TSUS, dutiable at the rate of 25 percent ad valorem. Merchandise classifiable in item 386.09, TSUS, may be eligible for duty-free treatment under the Generalized System of Preferences provided for in general headnote 3c(ii), (copy enclosed), if the applicable criteria are met.

Effect on Other Rulings.—Pursuant to section 177.9(d), Customs Regulations, prior Headquarters decisions inconsistent with the above ruling are modified in accordance with the principles announced below.

The change in the classification of aquarium dip nets in chief value of textile materials announced in this ruling shall not be applied to merchandise where the change in classification results in the imposition of a higher rate of duty except to merchandise which is entered or withdrawn for consumption after 30 days from the date of this ruling.

(C.S.D. 80–225)

Conditionally Free Merchandise: Aircraft Parts Imported Under the Civil Aircraft Agreement

Date: February 12, 1980
File: ENT–1–01–RRUEE
712178 M

This ruling concerns the importation of aircraft parts under the Civil Aircraft Agreement (title VI of Public Law 96–39).

Issues.—(1) Can the required Customs certification statement be given on the invoice? (2) Does the term "certified for use in civil aircraft," as used in the Civil Aircraft Agreement, require that the aircraft part has been imported for use in civil aircraft in the United States?

Facts.—A Canadian manufacturer notes that the telegram of December 17, 1979, implementing title VI of Public Law 96–39, effective January 1, 1980, requires that the appropriate Customs certification statement must "be stamped, typed, or printed on the entry summary or submitted as a separate document." This manufacturer inquires whether a preprinted Customs certification statement on each invoice would satisfy this requirement.

The same manufacturer sends semifinished aircraft parts to the United States for completion. These parts have approved part numbers and have received from the Canadian airworthiness authority the type of approval which is recognized by the Federal Aviation Administration (FAA) as equivalent to FAA parts manufacturing approval. These parts are returned to Canada either for immediate incorporation in a civil aircraft there or for inclusion in its spare parts inventory and eventual inclusion in a civil aircraft.

Law and Analysis.—Section 601 of Public Law 96–39, in pertinent part, provides that aircraft parts certified for use in civil aircraft and qualified under one of the listed item numbers of the tariff schedules may be imported free of duty. The term "certified for use" means that the importer shall file a written statement, accompanied by such supporting documentation as the Secretary of the Treasury may require, with the appropriate Customs officer stating that the imported article has been imported for use in civil aircraft, that it will be so used, and that the article has been approved for such use by the FAA or by the airworthiness authority in the country of exportation, if such approval is recognized by the FAA as an acceptable substitute for FAA certification, or that an application for approval for such use has been submitted to, and accepted (received) by, the FAA.

General interpretative rule 10(e), TSUS, provides that in the absence of special language or context which otherwise requires:

> (i) a tariff classification controlled by use (other than actual use) is to be determined in accordance with the use in the United States at, or immediately prior to, the date of importation, of articles of that class or kind to which the imported articles belong, and the controlling use is the chief use; i.e., the use which exceeds all other uses (if any) combined;
>
> (ii) a tariff classification controlled by the actual use to which an imported article is put in the United States is satisfied only if such use is intended at the time of importation, the article is so used, and proof thereof is furnished within 3 years after the date the article is entered.

It is our view that the telegram would not prohibit the Customs certification from being stamped, typed, or printed on the invoice. Such a statement placed on the invoice submitted with the entry summary would satisfy Customs requirements concerning the submission of this certification.

In regard to the second issue, we wish to point out that general interpretative rule 10(e)(i), TSUS, relates to chief use in the United States of that class or kind of which the imported articles belong. It does not concern itself solely with the actual use made of these particular imported articles. (See *Pistorino & Co., Inc.* v. *The United*

States, C.A.D. 1234.) Therefore, the imported articles would not be excluded from the Civil Aircraft Agreement because they were not to be used as a part of civil aircraft in the United States.

With regard to general interpretative rule 10(e)(ii), TSUS, we wish to point out that Report No. 96–249 of the Committee on Finance, U.S. Senate, on H.R. 4557, a bill to approve and implement the trade agreements, states in relevant part as follows:

> The certification requirement imposed under the amendment in section 601(a)(2) is a certification of use provision rather than an end use provision. The committee expects the Customs Service to monitor closely entries under the amendment under section 601, and where necessary to protect the revenues, take appropriate action to insure the continuing validity of statements supplied to Customs under the certification requirement.

A careful reading of the language of headnote 3(a), subpart C, part 6, schedule 6, TSUS, pertaining to "certified for use in civil aircraft," discloses that this headnote does not require use in the United States. To do so would inject a requirement not in the statutory language.

In summary, with respect to the use aspect, if the article is classified under one of the specified item numbers and the use will be in civil aircraft, whether in or outside of the United States, that article would be covered by the Civil Aircraft Agreement.

Holding.—(1) The Customs certification statement required in connection with the importation of aircraft parts under the Civil Aircraft Agreement may be given on the invoice submitted with the entry summary. (2) The certification for use in civil aircraft does not require that such part be used in civil aircraft in the United States.

Decisions of the United States Customs Court

United States Customs Court

One Federal Plaza
New York, N.Y. 10007

Chief Judge

Edward D. Re

Judges

Paul P. Rao
Morgan Ford
Scovel Richardson
Frederick Landis
James L. Watson
Herbert N. Maletz
Bernard Newman
Nils A. Boe

Senior Judge

Samuel M. Rosenstein

Clerk

Joseph E. Lombardi

Customs Decision

(C.D. 4877)

CONCORD ELECTRONICS CORP., PLAINTIFF *v.* UNITED STATES, DEFENDANT

Electronic Equipment (Tape recorders, etc.)

EXPORT VALUE—SEPARABLE APPRAISEMENTS—BUYING COMMISSION

Tape recorders, parts, and other electronic equipment exported from Japan between April 1970, and May 1971, and appraised on the basis of export value as defined in 19 U.S.C.A. 1401a(b) at total invoice values less bank interest charges, *Held,* properly appraised under the export value basis at total invoice values less bank interest charges and commissions as claimed by the importer

where the Government admits that an item invoiced as "Our Commission" was included as an element of value in the appraisements, and the uncontroverted evidence adduced by the importer in accordance with the principle of separability identifies the invoiced commission as a bona fide buying commission paid to the Hosho Corp. of Japan as the importer's agent for services which included routine inspection of the merchandise prior to shipment.

Court No. 74-6-01614

[Judgment for plaintiff.]

(Decided October 14, 1980)

Serko & Simon (*Carl R. Soller* and *Margaret H. Sachter* at the trial; *Joel K. Simon* with them on the brief); for the plaintiff.

Alice Daniel, Assistant Attorney General, *Joseph I. Liebman*, Attorney in Charge, Field Office for Customs Litigation (*Jerry P. Wiskin* at the trial and on the brief), for the defendant.

RICHARDSON, Judge: The merchandise in this action consists of tape recorders, parts, and other electronic equipment exported from Japan and entered at the Port of New York between April 30, 1970 and May 11, 1971. The merchandise was appraised on the basis of export value as defined in 19 U.S.C.A., section 1401a(b) (section 402(b) of the Tariff Act of 1930, as amended by the Customs Simplification Act of 1956). In issue under the export value basis is the dutiable status of an item designated on the invoices as "Our Commission". The importer contends that this item is nondutiable because it is a buying commission.[1]

The record in this action, hereinafter referred to as Concord II, consists of the testimony of four witnesses called on planitiff's behalf, the entry papers, some documentary exhibits, and the record in *Concord Electronics Corp.* v. *United States*, 69 Cust. Ct. 241, A.R.D. 304, 345 F. Supp. 1000 (1972), appeal dismissed, 60 CCPA 185 (1972), hereinafter referred to as Concord I, which was incorporated into the record in Concord II. In Concord I, an appellate term of the Customs Court affirmed the dismissal of the appeals for reappraisement which was rendered by a single judge (Maletz, J.) for failure of proof (R.D. 11744). Although Concord I involved the same parties and merchandise as are before the court in Concord II, the court never reached the issue as to the dutiable status of the commission in Concord I because the court found that the importer had never surmounted the separability hurdle, i.e., the capacity of a challenging party to limit its proofs to the single issue of the dutiability of the commission, owing to the severable character of the appraisement. The Concord I court reasoned that

[1] A claim in the complaint that certain inland charges are nondutiable was expressly abondoned by plaintiff.

> *there is no evidence to show what the appraising officer did* except that he placed a red check mark in the column headed "Appraised" on the summary sheet, thus indicating that the appraised value agreed with the entered value. (P. 244.) [Italic added.]

And the court went on to conclude that

> even if the commissions are bona fide buying commissions, they may not be deducted from the appraised values in order to establish different dutiable values, in the absence of evidence of all the elements of export value * * *. (Pp. 246–247.)

Concord II raises again the separability issue and the related issue as to the bona fides of the alleged buying commission. With respect to separability, the record in Concord II shows that plaintiff requested of defendant to admit, pursuant to Rule 6.2 of the Customs Court Rules, that "the commission indicated on the entry documents was included as one of the elements of value in determining the appraised value of that entry." And defendant responded to this request under the rule with a categorical "Admitted."

Additionally, import specialist Harold O'Neil testified that the Stamp "Correction Approved" placed on the summary sheet in entry 401377 reflected the fact that the commission shown on the invoice was originally deducted by the broker as nondutiable in his calculation of entry value, but was added back on instructions from the entry clerk when the clerk rejected the entry and returned it to the broker for that purpose. And it was also brought out in the witness' testimony that after the court's initial decision in Concord I, Mr. O'Neil wrote on a transmittal and routing slip under date of December 17, 1973, directed to the Protest Section the words "appeal for reappraisement dismissed per RD 11744—6/1/71 Commission remains dutiable" (exhibit 1).

Plaintiff argues that this evidence establishes that the appraisements in Concord II are separable. Defendant disagrees.

The court agrees with plaintiff. In the court's opinion, defendant's response to plaintiff's request for admissions conclusively removes the question of separability from contention in the case.

The admitted matter indicates that the commission on the entry documents was included as one of the elements of value in determining the appraised value. By admitting this, defendant identifies a commission as an element included in the admittedly unitary appraised value. It matters not at this point, as defendant undertakes to argue, that the admission does not establish to what extent or in what sense the stated commission was included as an element of value. It is the function of the challenging party's evidence to ferret out the details relative to the identity and purpose of the commission. Cf. *United States* v. *Imperial Products, Inc.*, 65 CCPA 38, C.A.D. 1203, 570 F. 2d 337 (1978).

Admission practice under the court's rules requires that a party specifically admit or deny the matter or set forth the reasons why the answering party cannot truthfully admit or deny the matter. The documentary evidence noted substantiates the genuine character of the admission, and indeed, may well have been the inducement for the admission itself. The admission is binding on the defendant.

Since defendant admits that a commission constitutes an element of the appraised value, the appraisements in Concord II are separable. *H. M. Young Associates, Inc.* v. *United States*, 69 Cust. Ct. 155, 159, C.D. 4388 (1972), *aff'd*, 62 CCPA 20, C.A.D. 1138, 505 F. 2d 721 (1974). And plaintiff may challenge the dutiability of the commission without disturbing the presumptively correct appraisements as to the other elements.

With respect to the commission, Howard P. Ladd, plaintiff's former president, testified that plaintiff, on the basis of a 50-percent stock interest in the Hosho Corp. (down from complete control originally), utilized Hosho solely as a buying agent in connection with the importation of merchandise Concord acquired from various Japanese manufacturers with whom it negotiated directly. And Ladd's testimony is corroborated by reference to a buying agency agreement dated January 25, 1968, contained in a report of a regional customs representative bearing date of November 30, 1971 (exhibit 7). The agreement provides for a 1.3 percent commission to the Hosho Corp. And the source investigated in the report disclosed that Hosho acted only as a buying agent and received only a commission for its services.

Of particular interest in the regional representative's report is documentation in the form of sales notes and an invoice of one of the Japanese manufacturer's, namely Matsushita Electric Industrial Co., Ltd. Although these documents as reproduced in the report are mostly illegible, there is enough data on them to indicate the manufacturer's awareness of plaintiff's interest in the merchandise as buyer even though delivery is to be made to Hosho.

Also, there is the affidavit of B. Takahashi, dated January 12, 1970, the managing director of Matsushita Electric Trading Co., Ltd. of Tokyo, Japan, which was received in evidence in Concord I as exhibit 2. The Takahashi affidavit names plaintiff as purchaser of the merchandise and identifies Hosho as plaintiff's agent. And, in an invoice attached to the affidavit as exhibit A, the Hosho Corp. is designated as a buying agent of Concord Electronics Corp.

Other evidence in the record is to the same effect, namely, the affidavit of Mike Miyake, dated January 12, 1970, president of the Hosho Corp. which was received in evidence in Concord I as exhibit 1.

Defendant, who called no witnesses, has introduced no evidence indicative of the parties' participation in these transactions in a

capacity different from that set forth in the evidence noted. Some question is raised by defendant relative to Hosho's activities as ranging beyond the duties of a buying agent in connection with inspection services.

In Concord II, Mr. Ladd testified that Hosho visited the factory where plaintiff was having merchandise made and inspected the merchandise before shipping. In Concord I, the Miyake affidavit states, in this connection, "We observe production of Concord goods and inspect them when ready for shipment to make certain that they meet Concord's specifications." But testimony of Mr. Ladd in Concord I is indicative of the superficial nature of this inspection service. On cross-examination Mr. Ladd testified (R. 39–40):

Q. Do they inspect the merchandise for you?

A. Yes.

Q. I didn't notice that in the affidavit of Mr. Miyake. But they do inspect the merchandise for you, that's one of the things for which they are paid?

A. At some factories, yes.

Q. They "observe the production of Concord goods and inspect them when ready for shipment to make certain that they meet Concord's specifications." They didn't do too well when you had an $80,000 claim against Matsushita.

A. It is very difficult to inspect the quality of merchandise. You have to design it in.

Q. I didn't get that.

A. Their inspection of a product doesn't guarantee that it's going to stand up in the field as a consumer product, and ours would not be the first company that had that type of problem.

Q. Are you telling me that Concord was able to get Matsushita to give them an $80,000 adjustment on something which had a bad design, that didn't meet market specifications?

A. No. This actually was not Matsushita, it was another company. There was a product shipped in fairly large quantities which we shipped in turn, when we inspected, found it was satisfactory, shipped to the retailers around the United States. And there were many of them, after they were purchased by consumers, were defective and returned to the retailer, who in turn returned them to us and said, "This product is defective."

Q. What was the defect? Was it a factory defect?

A. It was a factory defect.

Q. Hosho couldn't determine that?

A. Hosho couldn't determine that due to the shipping of merchandise in climatic changes of variations, humidity, temperature, and vibration. The cabinets would deteriorate, some components deteriorated. The merchandise didn't perform in the field.

Q. As a matter of fact, you said that you didn't go to Hosho of Japan for a claim on this, but you went to the manufacturer?

A. Right.

On the evidence the court agrees with plaintiff that the record is clearly supportive of the existence of a bona fide buying agency which

renders the underlying commission nondutiable. And the nondutiable status of the commission is not affected by the fact that it was paid in part for inspection services. As the court views the evidence the inspection services performed by Hosho were not of a quality control type affecting production of the merchandise, but rather were of the ordinary, garden variety post-production type that is commonly expected of a buying agent in the performance of its duties. Cf. *International Fashions* v. *United States*, 64 CCPA 35, 38, C.A.D. 1180, 545 F. 2d 138 (1976).

For the reasons stated, plaintiff has sustained the issuable allegations of the complaint relating to the commission. Consequently, defendant's motion to dismiss for failure of proof, made at the conclusion of plaintiff's case, is denied. And the court finds as facts:

1. That the merchandise in this action consists of tape recorders, parts, and other electronic equipment manufactured in Japan and exported therefrom between April 1970, and May 1971.

2. That said merchandise was appraised upon entry at the port of New York on the basis of export value as defined in 19 U.S.C.A., section 1401a(b) (section 402(b) of the Tariff Act of 1930, as amended by the Customs Simplification Act of 1956) at the total invoice values less bank interest charges.

3. That there is evidence in the record that the amounts shown on the invoices for "Our Commission" are a charge for a bona fide buying commission.

4. That defendant admits that the invoiced charge for "Our Commission" was included as an element of value in the appraisement of said merchandise.

Upon these facts the court concludes as matters of law:

1. That the appraisements herein are separable.

2. That export value as defined in 19 U.S.C.A., section 1401a(b) (section 402(b) of the Tariff Act of 1930, as amended by the Customs Simplification Act of 1956) is the proper basis for determination of the value of the merchandise herein.

3. That said values are represented by the total invoice values less amounts shown on the invoices for bank interest charges and commissions.

Judgment will be entered herein accordingly.

Decisions of the United States Customs Court

Abstracts

Abstracted Protest Decisions

DEPARTMENT OF THE TREASURY, *October 20, 1980.*

The following abstracts of decisions of the U.S. Customs Court at New York are published for the information and guidance of officers of the Customs and others concerned. Although the decisions are not of sufficient general interest to print in full, the summary herein given will be of assistance to Customs officials in easily locating cases and tracing important facts.

ROBERT E. CHASEN,
Commissioner of Customs.

DECISION NUMBER	JUDGE & DATE OF DECISION	PLAINTIFF	COURT NO.	ASSESSED	HELD	BASIS	PORT OF ENTRY AND MERCHANDISE
				Par. or Item No. and Rate	Par. or Item No. and Rate		
P80/156	Richardson, J. October 15, 1980	The Budd Company, Trailer Division	77-9-02720, etc.	Item 692.27 Rates of duty varying between 4% and 6.5%	Item 202.58 Various rates of duty from 0.0% to 1.5%	Agreed statement of facts	Philadelphia "Laminated truck flooring"
P80/157	Newman, J. October 15, 1980	Keystone d/o Berkey Photo, Inc., et al.	72-8-01859, etc.	Item 722.34 10%	Item 722.75 4.5%	Agreed statement of facts	New York Photographic light meters and photographic meter assemblies

Decisions of the United States Customs Court

Abstract

Abstracted Reappraisement Decisions

DECISION NUMBER	JUDGE & DATE OF DECISION	PLAINTIFF	COURT NO.	BASIS OF VALUATION	HELD VALUE	BASIS	PORT OF ENTRY AND MERCHANDISE
R80/297	Re, C.J. October 15, 1980	Adorence Co., Inc.	73-6-01540, etc.	Export value	Appraised values shown on entry papers less additions included to reflect currency revaluation	C.B.S. Imports Corp. v. U.S. (C.D. 4739)	New York Merchandise encompassed by entries shown on schedule attached to decision and judgment
R80/298	Re, C.J. October 15, 1980	Adorence Co., Inc.	76-8-01947, etc.	Export value	Appraised values shown on entry papers less additions included to reflect currency revaluation	C.B.S. Imports Corp. v. U.S. (C.D. 4739)	New York Merchandise encompassed by entries shown on schedule attached to decision and judgment
R80/299	Re, C.J. October 15, 1980	Amerex Trading Corp.	74-3-00700	Export value	Appraised values shown on entry papers less additions included to reflect currency revaluation	C.B.S. Imports Corp. v. U.S. (C.D. 4739)	Baltimore Merchandise encompassed by entries shown on schedule attached to decision and judgment

R80/300	Re, C.J. October 15, 1980	CBS Imports Corp.	77-3-00516	Export value	Appraised values shown on entry papers less additions included to reflect currency revaluation	C.B.S. Imports Corp. v. U.S. (C.D. 4739)	New York Merchandise encompassed by entries shown on schedule attached to decision and judgment
R80/301	Richardson, J. October 15, 1980	Eden Toys Inc.	77-12-04836	Constructed value	Articles exported from Haiti or Colombia—f.o.b. invoice unit values plus costs of materials and/or tooling assists furnished by importer as reflected in entry papers, without addition of 25% of costs of assists Articles exported from Hong Kong—f.o.b. invoice unit values plus costs of materials and/or tooling assists furnished by importer as reflected on entry papers, without addition of 15% of costs of assists	Agreed statement of facts.	New York Dolls, toys and various other articles, exported from Haiti, Colombia and Hong Kong
R80/302	Richardson, J. October 15, 1980	Mitsubishi International Corp.	80-7-01205	American selling price	$2.10 per pair for men's, $2.05 per pair for boy's, and $2 per pair for youth's footwear	Agreed statement of facts	Seattle Footwear

Appeals to U.S. Court of Customs and Patent Appeals

Appeal 81-1.—Texas Instruments Incorporated *v.* United States.—Integrated Circuits, Silect Transistors, and Metal Can Transistors—Articles Assembled Abroad—U.S. Components—Constructed Value—Summary Judgment. Appeal from C.D. 4867.

This action involves importations of integrated circuits, silect transistors, and metal can transistors assembled in Curacao, Netherlands Antilles, by Geographical Service Inc., a wholly owned subsidiary of plaintiff-appellant, and exported to the United States. In issue before the Customs Court on plaintiff's motion and defendant's cross-motion for summary judgment was the propriety of the appraising officer's actions in (1) disallowing item 807.00 treatment for a plastic epoxy molding compound used in the assembly of some of the imported devices, (2) making certain additions to or refusing to make certain reductions against the cost of components fabricated or purchased in the United States for use abroad in the assembly of the imported devices, (3) making certain additions to labor costs, general expenses, and profit, and (4) making improper value calculations in the application of the duty-free allowance. Appraisement on the basis of constructed value under section 402(d), Tariff Act of 1930, as amended by the Customs Simplification Act of 1956 (19 U.S.C. 1401a(d)), was conceded by the parties to be the proper basis for determination of the value of the imported devices. The Customs Court granted plaintiff's motion for summary judgment in part and granted defendant's cross-motion for summary judgment.

On appeal to the Court of Customs and Patent Appeals, plaintiff-appellant states:

> The court below determined that transactions involving the movement of materials and supplies from the importing parent to its wholly owned offshore assembly subsidiary, the only exporter of transistor devices in the country of assembly, and the return movement of assembled transistor devices from the subsidiary to the importing parent, at transaction prices dictated by the parent, were bona fide sales transactions for purposes of section 402(d) of the Tariff Act of 1930, as amended by the Customs Simplification Act of 1956.

With respect to the computation of the constructed value of the assembled transistor devices imported by the parent from its assembly subsidiary, the lower court determined that the cost of materials and fabrication element embraced all costs and expenses incurred by the importing parent to manufacture or acquire component materials in the United States plus intracompany and intercorporate profit markups utilized by the importing parent solely for internal management purposes.

As to the element of general expenses, the court below articulated the controlling principle of law that the computation of the amount of the statutory addition for general expenses is limited as to place, i.e., the country of exportation. Concerning the statutory addition for profit, the court held that the determination of this element was also limited as to place and that the assembler's rate of profit should be applied to a cost basis inclusive of an amount for materials provided by the parent-importer.

It is claimed that the Customs Court erred in holding that the movements of piece parts and components from the parent-importer to its wholly owned offshore assembly facility, at the risk of the parent-importer and pursuant to highly restrictive conditions imposed by the parent-importer, for use solely in the assembly of finished devices for the exclusive use of the parent-importer, were sales transactions for purposes of section 402(d) of the Tariff Act of 1930, as amended by the Customs Simplification Act of 1956; in holding that transfer prices dictated by the parent-importer for piece parts, components, and factory overhead supplies, startup-related supplies, and administrative supplies furnished to its wholly owned assembly facility, and for assembled transistor devices transferred from the assembling subsidiary to its parent-importer, were to be treated as the equivalent of prices determined in arm's-length transactions between unrelated parties for purposes of the determination of statutory constructed value; in holding that the parent-dictated transfer prices for piece parts and components manufactured or purchased by the parent in the United States and transferred to the related assembler, were actual costs within the meaning of section 402(d)(1) of the Tariff Act of 1930, as amended by the Customs Simplification Act of 1956; in holding that intracompany and intercorporate profit markups utilized for internal management purposes in connection with piece parts and components manufactured or purchased by the parent-importer in the United States and transferred to the assembly subsidiary constituted costs that were includable in the cost of materials element of the constructed value of the imported devices assemble from the piece parts and components provided by the importer; in holding that the appraising officer correctly determined, with respect to piece parts and components transferred to the related assembler by the parent-importer, the cost of materials and fabrication within

the meaning of section 402(d)(1); in holding that parent-dictated transfer prices for factory overhead supplies, startup-related supplies, and administrative supplies purchased by the parent in the United States and transferred to the assembler were actual expenses of the receiving subsidiary within the meaning of section 402(d)(2) of the Tariff Act of 1930, as amended by the Customs Simplification Act of 1956, for purposes of determining the amount for the general expenses element of constructed value; in holding, with respect to factory overhead supplies, startup-related supplies, and administrative supplies transferred to the related assembler by the parent-importer, that the amount for general expenses was correctly to be determined, within the meaning of section 402(d)(2), based exclusively on importer-dictated transfer prices; in holding that parent-importer-dictated transfer prices for assembled transistor devices imported by the parent from its wholly owned assembler, that were determined by the appraising officers to be unacceptable as a basis for appraisement, were, nevertheless, to be treated as the functional equivalent of arm's-length transaction prices between unrelated parties for purposes of determining the amount of the addition for profit element of the constructed value of the imported units; in holding that the exporting subsidiary's booked profit, which was a function of parent-company-dictated transfer prices for materials, supplies, technology, and finished devices, was profit within the meaning of section 402(d)(2); in holding that the amount for profit was correctly to be determined, within the meaning of section 402(d)(2), based on importer-dictated transfer prices; in holding that for purposes of determining the addition for profit element of the constructed value of the assembled devices, within the meaning of section 402(d)(2), the assembler's rate of profit was to be applied to a cost basis inclusive of an amount for the piece parts and components furnished at the risk of the parent-importer in accordance with highly restrictive conditions imposed by the parent-importer; in not holding that cost of materials and of fabrication within the meaning of section 402(d)(1), was limited to actual cost; in not holding that, for purposes of establishing actual costs and expenses within the meaning of the cost of materials and fabrication element of constructed value, the importer-parent-dictated transfer prices for piece parts and components furnished by the importer-parent to the related assembler must be adjusted as claimed by the parent-importer so as to account for differences between the standard costs and the actual costs to purchase or manufacture the piece parts and components in the United States and so as to exclude intracompany and intercorporate profit markups utilized by the parent-importer for internal management purposes; in not holding that general expenses within the meaning of section 402(d)(2), were limited to actual cost; in not holding that, for purposes of establishing actual costs and expenses within the meaning of the general expenses

element of constructed value, the parent-importer-dictated transfer prices for factory overhead supplies, startup-related supplies, and administrative supplies furnished to the assembly subsidiary must be adjusted as claimed by the parent-importer so as to account for differences between the standard costs and the actual costs to purchase such supplies in the United States; in not holding that where the booked profit of a wholly owned assembler is a function of parent-importer-dictated transfer prices for component materials, technology, supplies, and assembled devices, there can be no actual profit within the meaning of section 402(d)(2); in not holding that where the booked profit of a wholly owned subsidiary that is the only assembler operating in the country of exportation is a function of parent-importer-dictated transfer prices, the profit element of the constructed value of the assembled devices is correctly to be established utilizing the rate of profit earned by the parent-importer in arm's-length sales of the imported merchandise to unrelated buyers; in not holding that the transfers of piece parts and components supplied to the assembler by the parent-importer at its risk and at transfer prices dictated by it, for use exclusively in the assembly of finished devices, were not sales transactions within the meaning of the customs law for purposes of establishing the amount of the addition for profit element of the constructed value of the imported devices; in not holding that the amount for profit usually added, within the meaning of section 402(d)(2), must be computed, in the case of a wholly owned assembler, by applying the rate of profit earned on arm's-length sales of assembled devices to a cost basis that does not include the cost of piece parts and components furnished by the parent-importer without risk to the related assembler.

Appeal 81-2.—Way Distributors, Inc. *v.* United States.—Sheets of Rubber Used for Shoe Soles—Expanded Rubber—Rubber Sheets—Rubber Articles Not Specially Provided For—TSUS—Interpretative Rule; Administrative Procedure Act—American Manufacturers' Protest; Tariff Act of 1930. Appeal from C.D. 4870.

In this case sheets of rubber used for making shoe soles, known by the trade names of Borvinide, Polyflex, Superlite, and Norazell, were classified as expanded rubber under item 770.80 of the Tariff Schedules of the United States and assessed with duty at the rate of 12.5 percent ad valorem. Plaintiff-appellant claimed that the merchandise should be classified as rubber sheets under item 771.42, dutiable at the rate of 6 percent or, alternatively, as rubber articles not specially provided for under item 774.60, dutiable at the rate of 8.5 percent. Plaintiff also claimed that ORR ruling 202-71, upon which the disputed classi-

fication was based, was promulgated in violation of the rulemaking provision of the Administrative Procedure Act, 5 U.S.C. 553, and, further, that ORR ruling 202–71 was issued in violation of section 516(b) of the Tariff Act of 1930, as amended (19 U.S.C. 1516(b)).

The Customs Court found that the classification was substantively and procedurally correct and overruled plaintiff's claims.

It is claimed that the Customs Court erred in finding for and entering judgment for the defendant; in not finding for and not entering judgment for the plaintiff; in finding and holding that the merchandise was classifiable under item 770.80, supra; in not finding and holding that the merchandise was classifiable under item 771.42 or in the alternative under item 774.60, supra; in finding and holding that the merchandise was expanded rubber or plastics; in not finding and holding that semiexpanded or semicompacted rubber is a distinctly and commercially different product from expanded rubber; in finding and holding that ORR ruling 202–71 was not promulgated in violation of the Administrative Procedure Act, 5 U.S.C. 553; in not finding and holding that the January 3, 1970 letter from the attorney for the Rubber Manufacturers' Association to Customs was a complaint to the Customs Service about the assessment of duties on products imported by Way Distributors, Inc. the plaintiff/appellant in this case, and another importer; in finding and holding that the Customs Headquarters response to the June 3, 1970 letter was an interpretative rule and specifically exempt from the notice and participation requirement of the Administrative Procedure Act, 5 U.S.C. 553(b)(A); in not finding and holding that the response to the June 3, 1970 letter in the form of ORR ruling 202–71, assuming arguendo the ORR ruling is an interpretative rule, had substantial impact on the plaintiff and thereby violated the plaintiff's rights to procedural due process as set forth in the Administrative Procedure Act, 5 U.S.C. 553(b)(A); in finding and holding that ORR ruling 202–71 was not issued in violation of section 516(b) of the Tariff Act of 1930, as amended (19 U.S.C. 1516(b)); in not finding and holding that the Customs Service failed to follow the congressional mandate contained in section 516(b), which requires that American manufacturers' complaints be filed in the manner and form described by said section 516(b) and the pertinent Customs Regulations, 19 CFR 17.11; in not finding and holding that the Customs Service granted relief to an association of American manufacturers, producers, or wholesalers which did not have legal standing for such relief under section 516(b); in not finding and holding that the plaintiff, Way Distributors, Inc., was entitled to notice and comment under section 516 of the Tariff Act of 1930, as amended (19 U.S.C. 1516); in not finding and holding that an association does not have legal standing under the Customs Regulations to request a ruling on prospective imports.

International Trade Commission Notices

Investigations by the U.S. International Trade Commission

DEPARTMENT OF THE TREASURY, *October 30, 1980.*

The appended notices relating to investigations by the U.S. International Trade Commission are published for the information of Customs officers and others concerned.

R. E. CHASEN,
Commissioner of Customs.

In the Matter of CERTAIN HOLLOW FIBER ARTIFICIAL KIDNEYS	Investigation No. 337-TA-81

Motion 81-23 Granted

On October 6, 1980, the Commission voted to grant motion 81-23 and extend the time for completion of the hearing before the presiding officer until December 2, 1980.

Copies of the Commission's action and order and any other public documents in this investigation are available to the public during official working hours (8:45 a.m. to 5:15 p.m.) in the Office of the Secretary, U.S. International Trade Commission, 701 E Street NW., Washington, D.C. 20436; 202-523-0161.

By order of the Commission.

Issued: October 20, 1980.

KENNETH R. MASON,
Secretary.

701-TA-65, 66, 67, and 68 (Preliminary)

LEATHER WEARING APPAREL FROM BRAZIL, KOREA, TAIWAN AND URUGUAY

Notice of Institution of Preliminary Countervailing Duty Investigations and Scheduling of Conference

AGENCY: U.S. International Trade Commission.

ACTION: Institution of preliminary countervailing duty investigations to determine whether there is a reasonable indication that an industry in the United States is materially injured, or is threatened with material injury, or the establishment of an industry is materially retarded, by reason of allegedly subsidized imports from Brazil, Korea, Taiwan, and Uruguay of leather wearing apparel, provided for in item 791.76 of the Tariff Schedules of the United States (TSUS).

EFFECTIVE DATE: October 15, 1980.

FOR FURTHER INFORMATION CONTACT: Vera Libeau, Senior Investigator; 202-523-0368.

SUPPLEMENTARY INFORMATION:

BACKGROUND

These investigations are being instituted following receipt of a petition on October 15, 1980, filed by Ralph Edwards Sportswear, Inc., on behalf of domestic producers of leather wearing apparel. The petition requested the imposition of additional duties in an amount equal to the net amounts of the alleged bounties or grants.

AUTHORITY

Section 703(a) of the Tariff Act of 1930 (19 U.S.C. 1671b(a)) requires the Commission to make a determination of whether there is a reasonable indication that an industry in the United States is materially injured, or is threatened with material injury, or the establishment of an industry in the United States is materially retarded, by reason of the alleged subsidized imports. Such a determination must be made within 45 days after the date on which a petition is filed under section 702(b) or on which notice is received from the Department of Commerce of an investigation commenced under section 702(a). Accordingly, the Commission, on October 21, 1980, instituted preliminary countervailing duty investigations Nos. 701-TA-65, 66, 67, and 68. These investigations will be subject to the provisions of part 207 of the Commission's Rules of Practice and Procedure (19 CFR 207, 44 F.R. 76457) and particularly, subpart B thereof.

WRITTEN SUBMISSIONS

Any person may submit to the Commission on or before November 17, 1980, a written statement of information pertinent to the subject matter of these investigations. A signed original and 19 copies of such statements must be submitted.

Any business information which a submitter desires the Commission to treat as confidential shall be submitted separately and each sheet must be clearly marked at the top "Confidential Business Data." Confidential submissions must conform with the requirements of section 201.6 of the Commission's Rules of Practice and Procedure (19 CFR 201.6). All written submissions, except for confidential business data, will be available for public inspection.

CONFERENCE

The Director of Operations of the Commission has scheduled a conference in connection with these investigations for 10 a.m., e.s.t., on November 12, 1980, at the U.S. International Trade Commission Building, 701 E Street NW., Washington, D.C. Parties wishing to participate in the conference should contact the senior investigator for these investigations, Ms. Vera Libeau (202–523–0368). It is anticipated that parties in support of the petition for countervailing duties and parties opposed to such petition will each be collectively allocated one hour within which to make an oral presentation at the conference. Further details concerning the conduct of the conference will be provided by the senior investigator.

INSPECTION OF PETITION

The petition filed in these cases is available for public inspection at the Office of the Secretary, U.S. International Trade Commission.

By order of the Commission.

Issued: October 22, 1980.

KENNETH R. MASON,
Secretary.

Index

U.S. Customs Service

Treasury decisions: T.D. No.

Cotton and manmade fiber textile products; restriction on entry ---- 80–258

Customs approved public gauger ---- 80–259

Customs regulations amended, section 6.3a, aircraft clearance proceeding between United States and Cuba ---- 80–264

Foreign currencies:

Daily certified rates; October 13–17, 1980 ---- 80–260

Rates which varied from quarterly rate; October 13–17, 1980 ---- 80–261

Daily certified rates; October 20–24, 1980 ---- 80–262

Rates which varied from quarterly rate; October 20–24, 1980 ---- 80–263

Customs Service decisions: C.S.D No.

American selling price: legal similarity of footwear; "Willing to receive price" under section 402a(g), Tariff Act of 1930, as amended ---- 80–210

Classification:

Aquarium nets ---- 80–224

Lace fabric defined for tariff purposes ---- 80–204

Monofilament fly fishing line ---- 80–206

Piping on men's reversible jacket as ornamentation ---- 80–219

Replicas of spacecraft in movie "Star Wars"; models ---- 80–223

Whether baseball caps with braided strip are in part of braid ---- 80–205

Whether baseball caps with noncontrasting braid are in part of braid ---- 80–209

Whether hog flooring is an agricultural implement ---- 80–203

Whether the filling of voids in metal castings with putty and sanding are advancements beyond cleaning ---- 80–201

Conditionally free merchandise: Aircraft parts imported under the civil aircraft agreement ---- 80–225

Merchandise entered under item 832.00, TSUS, as emergency war material ---- 80–222

Cost of production:

Apportionment of fixed overhead costs ---- 80–211

Testing and programing costs ---- 80–214

Constructed value: Allowance for decrease in material costs on date preceding exportation; inability of importer to supply information ---- 80–207

Duty assessment: Documentation to establish nondutiability of quota charge ---- 80–212

Export value:

Includability of warranty and after-sales service costs ---- 80–213

Whether a buying commission is bona fide and nondutiable ---- 80–202

Generalized system of preferences: Direct costs of processing operations; substantial transformation ---- 80–208

In-bond carriers: Whether Canadian motor carriers operating in the United States may be designated as carriers of bonded merchandise ---- 80–218

Instruments of international traffic:
Equipment used to discharge and transport cargo from vessels; "MAFI" ---------- 80–216
High-pressure seamless cylinders ---------- 80–217
Pipe carrier units used to transport pipe ---------- 80–220
Value: Assists furnished to manufacturers in different foreign countries ---------- 80–215
Warehouse: Eligibility of rum from Puerto Rico ---------- 80–221

Customs Court

Appeals to U.S. Court of Customs and Patent Appeals (p. –?): Appeals:
81–1—Integrated circuits, silect transistors, and metal can transistors; articles assembled abroad; U.S. components; constructed value; summary judgment
81–2—Sheets of rubber used for shoe soles; expanded rubber; rubber sheets; rubber articles not specially provided for; TSUS; Interpretative rule; Administrative Procedure Act; American manufacturers' protest; Tariff Act of 1930.
Valuation decision:
Construction:
Customs Simplification Act of 1956, C.D. 4877
Rules of U.S. Customs Court, rule 6.2, C.D. 4877
Tariff Act of 1930, as amended, sec. 402(b), C.D. 4877
United States Code Annotated, title 19, sec. 1401(a)(b), C.D. 4877
Issues:
Export value—evidence—buying commission—It is the function of the challenging party's evidence to ferret out the details relative to the identity and purpose of the buying commission. *Concord Electronics Corp.*, C.D. 4877
Export value—separable appraisements—buying commission—Tape recorders, parts, and other electronic equipment exported from Japan between April, 1970, and May, 1971, and appraised on the basis of export value as defined in sec. 402(b) of the Tariff Act of 1930, as amended by the Customs Simplification Act of 1956, at total invoice values less bank interest charges, were held properly appraised under the export value basis at total invoice values less bank interest charges and commissions as claimed by the importer where the Government admitted that an item invoiced as "Our Commission" was included as an element of value in the appraisements, and the uncontroverted evidence adduced by the importer in accordance with the principle of separability identified the invoiced commission as a bona fide buying commission paid to a Japanese corporation as the importer's agent for services which included routine inspection of the merchandise prior to shipment. *Concord Electronics Corp.*, C.D. 4877
Merchandise; electronic equipment (tape recorders, parts, etc.), C.D. 4877
Value; export, C.D. 4877
Words and phrases:
Bona fide buying commission, C.D. 4877
Buying commission, C.D. 4877
Commissions, C.D. 4877
Separability, C.D. 4877

U.S. GOVERNMENT PRINTING OFFICE : 1980 O - 331-468

To 331-469 Item 950-D T 1.11/3:14/47
NOV 19 1980
contin'd
C-378

Customs Bulletin

Regulations, Rulings, Decisions, and Notices concerning Customs and related matters

and Decisions

of the United States Court of Customs and Patent Appeals and the United States Customs Court

9247 H.H.

Vol. 14 NOVEMBER 19, 1980 No. 47

This issue contains

T.D. 80–265 through 80–270
ERRATUM
C.A.D. 1254
C.R.D. 80–18
Recent Unpublished Customs Service Decisions
International Trade Commission Notices

THE DEPARTMENT OF THE TREASURY
U.S. Customs Service

NOTICE

The abstracts, rulings, and notices which are issued weekly by the U.S. Customs Service are subject to correction for typographical or other printing errors. Users may notify the U.S. Customs Service, Logistics Management Division, Washington, D.C. 20229, of any such errors in order that corrections may be made before the bound volumes are published.

For sale by the Superintendent of Documents, U.S. Government Printing Office, Washington, D.C. 20402. Price: $2.25 (single copy domestic); $2.85 (single copy foreign). Subscription price: $85.00 a year domestic; $106.25 a year foreign.

U.S. Customs Service

Treasury Decisions

(T.D. 80–265)

Synopses of Drawback Decisions

The following are synopses of drawback rates issued May 23, 1980, to June 25, 1980, inclusive, pursuant to sections 22.1 through 22.5, inclusive, Customs Regulations.

In the synopses below are listed for each drawback rate approved under 19 U.S.C. 1313(a), the name of the company, the specified articles on which drawback is authorized, the merchandise which will be used to manufacture or produce these articles, the factories where the work will be accomplished, the date the statement was signed, the basis for determining payment, the Regional Commissioner who issued the rate, and the date on which it was signed.

(DRA–1–09)

Dated: October 29, 1980.

George C. Steuart
(For Alfred G. Scholle, Director,
Carriers, Drawback and Bonds Division).

(A) Company: CPC International Inc.
Articles: Acid coconut oil, cochin (neutral) coconut oil, refined coconut oil (trademark Nucoline), blended refined coconut oil (trademark Filbisk).
Merchandise: Imported crude coconut oil.
Factory: Bayonne, N.J.
Statement signed: April 7, 1980.
Basis of claim: Used in, with distribution to the products obtained in accordance with their relative value at the time of separation.
Rate issued by Regional Commissioner of Customs: New York, June 2, 1980.

(B) Company: Coffee-Mate.
Articles: Automatic merchandising machines, Coffee machines and snack machines.
Merchandise: Imported line cord, radio interference filter, thermometer, and special formica.
Factory: Kenilworth, N.J.
Statement signed: May 21, 1980.
Basis of claim: Used in.
Rate issued by Regional Commissioner Customs: New York, June 2, 1980.

(C) Company: Delmar Chemicals Ltd.
Articles: Chlordiazepoxide hydrochloride.
Merchandise: Imported chlordiazepoxide base.
Factory: Holley, N.Y.
Statement signed: February 19, 1980.
Basis of claim: Used in.
Rate issued by Regional Commissioner of Customs: Boston, June 24, 1980.

(D) Company: Drexel Chemical Co.
Articles: Ethyl parathion 50 percent W/V (agricultural insecticide).
Merchandise: Imported ethyl parathion technical 98 percent.
Factory: Tunica, Miss.
Statement signed: January 11, 1980.
Basis of claim: Used in.
Rate issued by Regional Commissioner of Customs: New Orleans, June 17, 1980.

(E) Company: General Electric Co.
Articles: Generators.
Merchandise: Imported and/or drawback slot armor, subslot covers and steel sections.
Factories: Lynn, Mass. and Durham, N.C.
Statement signed: June 2, 1980.
Basis of claim: Appearing in.
Rate issued by Regional Commissioner of Customs: New York, June 20, 1980.

(F) Company: Ideal Finishing, Inc.
Articles: Cut lace piece goods.
Merchandise: Imported dyed lace piece goods.
Factory: Fairview, N.J.
Statement signed: March 17, 1980.
Basis of claim: Used in, less valuable waste.

Rate issued by Regional Commissioner of Customs: New York, June 2, 1980.
Revokes: T.D. 79-244-H.

(G) Company: International Veiling Corp.
Articles: Dyed lace piece goods.
Merchandise: Lace piece goods.
Factory: Clifton, N.J.
Statement signed: April 10, 1980.
Basis of claim: Used in, less valuable waste.
Rate issued by Regional Commissioner of Customs: New York, June 2, 1980.
Revokes: T.D. 79-234-L.

(H) Company: Andrew S. McCreath & Son, Inc.
Articles: Ferrochrome, crushed and sized.
Merchandise: Imported ferrochrome.
Factory: Baltimore, Md.
Statement signed: January 29, 1980.
Basis of claim: Appearing in.
Rate issued by Regional Commissioner of Customs: New York, June 2, 1980.

(I) Company: Marwais Steel Co.
Articles: Thermo-enamelled galvanized steel in sheet or coil.
Merchandise: Imported galvanized steel in sheet or coil.
Factory: Richmond, Calif.
Statement signed: March 20, 1980.
Basis of claim: Appearing in.
Rate issued by Regional Commissioner of Customs: San Francisco, June 6, 1980.

(J) Company: Medical Devices of Fall River, Inc.
Articles: Medical kits.
Merchandise: Imported glass syringes.
Factory: Fall River, Mass.
Statement signed: April 15, 1980.
Basis of claim: Appearing in.
Rate issued by Regional Commissioner of Customs: Boston, June 9, 1980.

(K) Company: Mostek Corp.
Articles: Finished semiconductor devices.
Merchandise: Imported semiconductor subassemblies.

Factories: Colorado Springs, Colo. and Carrollton, Tex.
Statement signed: March 31, 1980.
Basis of claim: Appearing in.
Rate issued by Regional Commissioner of Customs: San Francisco, June 4, 1980.

(L) Company: National Papaya Co.
Articles: Bottled grape juice.
Merchandise: Imported bulk concentrate grape juice.
Factory: Odessa, Fla.
Statement signed: June 13, 1980.
Basis of claim: Used in.
Rate issued by Regional Commissioner of Customs: Miami, June 20, 1980.

(M) Company: Plant City Steel Co.
Articles: LPG tanks.
Merchandise: Imported steel plate (A–455).
Factory: Jesup, Ga.
Statement signed: June 4, 1980.
Basis of claim: Appearing in.
Rate issued by Regional Commissioner of Customs: Miami, June 17, 1980.
Revokes: T.D. 80–111–Q.

(N) Company: Schnacke-Grasso, Inc.
Articles: Refrigeration compressor units and systems.
Merchandise: Imported refrigeration compressors, valves, gauges, and suction filters.
Factory: Evansville, Ind.
Statement signed: April 29, 1980.
Basis of claim: Used in.
Rate issued by Regional Commissioner of Customs: Chicago, May 30, 1980.

(O) Company: Seiko Time Corp.
Articles: Completed watches with bands or straps.
Merchandise: Imported watch heads.
Factory: El Segundo and Torrance, Calif.
Statement signed: March 17, 1980.
Basis of claim: Appearing in.
Rate issued by Regional Commissioner of Customs: Los Angeles, June 17, 1980.

(P) Company: The Singer Co.
Articles: Sewing machines and subassemblies thereof.
Merchandise: Imported and/or drawback mechanical and electrical components.
Factory: Anderson, S.C.
Statement signed: June 13, 1980.
Basis of claim: Appearing in.
Rate issued by Regional Commissioner of Customs: New York, June 25, 1980.

(Q) Company: W. I. Skinner & Co., Inc.
Articles: Black fat tobacco.
Merchandise: Imported and/or drawback leaf tobacco.
Factory: Williamston, N.C.
Statement signed: March 25, 1980.
Basis of claim: Used in.
Rate issued by Regional Commissioner of Customs: New York, June 20, 1980.

(R) Company: Syntex Laboratories, Inc.
Articles: Norminest tablets (0.5 mg).
Merchandise: Imported Norethindrone.
Factory: Palo Alto, Calif.
Statement signed: May 12, 1980.
Basis of claim: Used in.
Rate issued by Regional Commissioner of Customs: San Francisco, June 4, 1980.

(S) Company: Transbas, Inc.
Articles: MCP/DMA amine formulation (herbicide).
Merchandise: Imported technical MCPA (herbicide ingredient—benzenoid chemical).
Factory: Billings, Mont.
Statement signed: February 13, 1980.
Basis of claim: Used in.
Rate issued by Regional Commissioner of Customs: New Orleans, June 17, 1980.

(T) Company: Union Carbide Corp.
Articles: Ferrochrome, crushed and sized.
Merchandise: Imported ferrochrome.
Factory: Baltimore, Md.
Statement signed: February 25, 1980.
Basis of claim: Appearing in.

Rate issued by Regional Commissioner of Customs: New York, June 2, 1980.

(U) Company: Volvo Penta of America, Division of Volvo of America Corp.
Articles: Marine engines.
Merchandise: Imported marine engine parts.
Factory: Chesapeake, Va.
Statement signed: May 1, 1980.
Basis of claim: Used in.
Rate issued by Regional Commissioner of Customs: Baltimore, May 23, 1980.

(V) Company: Wellman Industries Inc.
Articles: Wool or hair—sorted, graded, matched, sorted and graded, blended, scoured, carbonized, carded or combed (tops, preshrunk, blended and comb-waste (noils)).
Merchandise: Imported and/or drawback grease wool and scoured wool; hair of animals viz. camel, alpaca including llama and vicuna, cashmere goat, angora goat, and angora rabbit.
Factory: Johnsonville, S.C.
Statement signed: October 22, 1979.
Basis of claim: Used in, with distribution to the products obtained in accordance with their relative value at the time of separation, less valuable waste.
Rate issued by Regional Commissioner of Customs: New York, June 2, 1980.

(W) Company: Western International Grain Services, Ltd.
Articles: Faba beans.
Merchandise: Imported faba bean seeds.
Factories: Various Montana farms.
Statement signed: April 2, 1980.
Basis of claim: Used in.
Rate issued by Regional Commissioner of Customs: New York, May 30, 1980.

(X) Company: Westinghouse Electric Corp.
Articles: Steam turbine rotors.
Merchandise: Imported and/or drawback steam turbine rotor forgings, rough machined.
Factory: Lester, Pa.

Statement signed: February 21, 1980.
Basis of claim: Used in, less valuable waste.
Rate issued by Regional Commissioner of Customs: New York, June 2, 1980.

(Y) Company: Westinghouse Electric Corp.
Articles: Steam turbine rotors, in cylinder.
Merchandise: Imported and/or drawback rotor forgings and rotor disc forgings.
Factory: Charlotte, N.C.
Statement signed: February 20, 1980.
Basis of claim: Used in, less valuable waste.
Rate issued by Regional Commissioner of Customs: New York, June 11, 1980.

(Z) Company: Yuba Heat Transfer Corp.
Articles: Pressure vessels.
Merchandise: Imported plate, forgings, and tubes.
Factory: Tulsa, Okla.
Statement signed: May 20, 1980.
Basis of claim: Used in, less valuable waste.
Rate issued by Regional Commissioner of Customs: Houston, June 20, 1980.

(T.D. 80-266)

Bonds

Approval and discontinuance of carriers bonds, Customs form 3587

Bonds of carriers for the transportation of bonded merchandise have been approved or discontinued as shown below. The symbol "D" indicates that the bond previously outstanding has been discontinued on the month, day, and year represented by the figures which follow "PB" refers to a previous bond, dated as represented by figures in parentheses immediately following, which has been discontinued. If the previous bond was in the name of a different company or if the surety was different, the information is shown in a footnote at the end of the list.

Dated: October 30, 1980.

331-469 O - 80 -2

Name of principal and surety	Date of bond	Date of approval	Filed with district director/area director/amount
A-P-A Transport Corp., 2100 88th St., North Bergen, NJ; motor carrier; American Motorists Insurance Co.	Aug. 22, 1980	Sept. 16, 1980	Newark, NJ $50,000
Air Cargo Transit, Inc., 1311 S. 27th St., Phoenix, AZ; motor carrier; The Hanover Insurance Co.	Sept. 9, 1980	Sept. 16, 1980	Nogales, AZ $25,000
Albury and Company, Dodge Island, Port of Miami, P.O. Box 014221, Miami, Fla.; motor carrier; Washington International Ins. Co.	Aug. 27, 1980	Sept. 18, 1980	Miami, FL $25,000
Arrow Transportation Co., Inc., 167 Perry St., New York, NY; motor carrier; Peerless Ins. Co. D 8/29/80	Oct. 22, 1975	Oct. 22, 1975	New York Seaport $25,000
Consolidated Transfer & Warehouse Co., Inc., Taney & Levee Rd., N. Kansas City, MO; motor carrier; Fidelity & Deposit Co.	Sept. 2, 1980	Sept. 24, 1980	Houston, TX $25,000
Adan J. Dominguez, dba Dominguez Brothers Trucking Co., 1500 So. Zarzamora, San Antonio, TX; motor carrier; National Surety Corp.	Jan. 15, 1980	Sept. 25, 1980	Laredo, TX $25,000
Duo Trucking Corp., 901 Castle Rd., Secaucus, NJ; motor carrier; Peerless Ins. Co.	Sept. 8, 1980	Oct. 3, 1980	Newark, NJ $50,000
Garfield Transportation Systems, Inc., 300 Canal Bank Rd , Ville St. Pierre, Quebec, Canada H8R 1H3; motor carrier; The Continental Insurance Co.	Mar. 10, 1980	Sept. 24, 1980	Ogdensburg, NY $50,000
Jet Line Service, Inc., 460 Riverside Industrial Parkway, Portland, ME; motor carrier; Hartford Accident and Indemnity Co.	May 21, 1980	Oct. 1, 1980	Portland, ME $25,000
Kipling Weldon Castleberry dba KASKO, 3310 Bobbie Lane, Garland, TX; motor carrier; St. Paul Fire & Marine Ins. Co.	Sept. 18, 1980	Oct. 2, 1980	Dallas/Fort Worth, TX $25,000
Mercer Brothers Trucking Co., P.O. Box 952, Wilson, NC; motor carrier; United States Fire Insurance Co. (PB 3/4/77) D 9/22/80 [1]	Sept. 12, 1980	Sept. 23, 1980	Wilmington, NC $25,000
Mitel of Delaware, Inc., 1498 N.W. 3rd St., Deerfield Beach, Fla., motor carrier; Fidelity & Deposit Co. of MD	July 28, 1980	Sept. 25, 1980	St. Albans, VT $25,000
Oak Harbor Freight Lines, Inc., 6350 S. 143rd, Seattle, WA; motor carrier; Safeco Ins. Co. of America (PB 5/10/72) D 9/12/80 [2]	Sept. 9, 1980	Sept. 12, 1980	Seattle, WA $25,000
Shippers Imperial, Inc., P.O.B. 5790, San Jose, Calif., motor carrier; Peerless Ins. Co. D 9/26/80	Oct. 19, 1972	May 1, 1973	San Francisco, CA $65,000
Sulli-Van Lines, Inc., 43 Cortland, Highland Park, MI; motor carrier; Firemen's Ins. Co. of Newark, NJ	Sept. 19, 1980	Oct. 1, 1980	Newark, NJ $50,000
Sullivan Trucking Co., Inc., P.O. Box 2164, ¼ mile S. of Jct 156 & 60, Ponca City, OK; motor carrier; Hartford Accident & Indemnity Co.	Nov. 29, 1979	Oct. 7, 1980	Dallas/Fort Worth, TX $25,000

See footnotes at end of table.

Name of principal and surety	Date of bond	Date of approval	Filed with district director/area director/amount
David Tesone Trucking, Inc., Box 35, Wildwood, PA; motor carrier; The American Ins. Co. D 10/13/80	Sept. 15, 1978	Sept. 18, 1978	Philadelphia, PA $25,000
World International Freight Forwarders, Inc., P.O. Box 20013—New Orleans Int'l Airport, New Orleans, La; Freight Forwarders; Old Republic Ins. Co.	Oct. 2, 1980	Oct. 2, 1980	New Orleans, LA $50,000
Mr. Harry G. Zimmerman, Allstate Distributors, 808 Beltrees St., Dunedin, Fla.; motor carrier; Aetna Ins. Co. D 11/15/79	Oct. 25, 1977	Oct. 25, 1977	Tampa, Fla. $25,000

[1] Surety is United States Fidelity & Guaranty Co.

[2] Principal is Gus VanderPol and Henry VanderPol d.b.a. Oak Harbor Freight Lines; Surety is Fidelity & Deposit Co. of Maryland.

BON-3-03

GEORGE C. STEUART
(For Alfred G. Scholle, Director
Carriers, Drawback and Bonds Division).

(T.D. 80-267)

Drawback Contract (Rate)

There follows an approved drawback contract (rate). Anyone who can comply with the conditions of the contract may adhere to it by notifying a Regional Commissioner of Customs in writing of the intention to do so and providing him with the following information:

1. Name and address of adherent;
2. Factories which will operate under the contract;
3. If a corporation, the names of officers or persons with power of attorney who will sign drawback documents on behalf of adherent.

This contract is designed to simplify drawback procedures for certain common manufacturing operations. It of course does not preclude or limit the use of individual contracts.

Dated: October 31, 1980.

GEORGE C. STEUART
(For Alfred G. Scholle, Director,
Carriers, Drawback and Bonds Division).

Drawback Contract Under 19 U.S.C. 1313(b), Finishing Processes for Designated Greige Piece Goods

Imported merchandise or drawback products to be designated as the basis for the allowance of drawback on the exported products	Duty-paid, duty-free, or domestic merchandise of the same kind and quality as that designated which will be used in the manufacture of the exported products
Greige piece goods.	Greige piece goods.

The goods which we propose to use in manufacture will be the same kind and quality as the goods which we will designate as the basis of claim for drawback, and are used interchangeably by us without change in manufacturing processes or resultant products, byproducts, or wastes.

We do ask that some tolerances between imported-designated goods and the used-exported goods be permitted to accommodate variations which are normally found in greige piece goods. These tolerances are no greater than the tolerances generally allowed in the industry for goods of the same kind and quality:

(1) We propose that there be allowed a 4-percent weight tolerance, and the greige goods which we propose to use in manufacture will be not more than 4-percent lighter or heavier than the imported greige goods which will be designated;

(2) We propose that there be allowed a tolerance of 4-percent in the aggregate thread count per square inch, and the greige goods we propose to use in manufacture will have an aggregate thread count within 4 percent, more or less of the aggregate thread count of the imported greige goods which will be designated.

In each case, the average yarn number of the domestic goods will be the same or greater than the average yarn number of the imported goods which we propose to designate, and in each case, the substitution and tolerance will be employed only within the same family of fabrics, i.e. print cloth for print cloth, gingham for gingham, etc.

The piece goods used in manufacture of the exported articles will be designated as containing the identical percentage of identical fibers as the piece goods designated as the basis for allowance of drawback; for example, piece goods containing 65 percent cotton and 35 percent dacron will be designated against the use of piece goods shown to contain 65 percent cotton and 35 percent dacron. The actual fiber composition may vary slightly from that described on the invoice on other acceptance of the fabric as having the composition described or documents in accordance with trade practices.

It is further understood and agreed that the substituted greige goods which we use in the manufacture of articles for exportation

with benefit of drawback will be so similar in quality to the imported greige goods which we will designate for the basis of allowance of drawback, that the greige goods used, if it had been imported, would have been subject to the same or greater amount of duty as was paid on the imported designated greige goods. We understand, however, that differences in value resulting from the factors other than quality, as for example, price fluctuations, will not preclude an allowance of drawback.

EXPORTED ARTICLES ON WHICH DRAWBACK WILL BE CLAIMED

Finished piece goods.

GENERAL STATEMENT

We process greige piece goods for our own account. We may process piece goods for the account of another producer or another producer may process piece goods for our account under contract within the principal and agency relationship outlined in T.D. 55027(2) and 55207(1).

PRODUCTION

Greige piece goods are subjected to any one of the following finishing productions:

1. Bleaching,
2. Mercerizing,
3. Dyeing,
4. Printing,
5. A combination of the above, or
6. Any additional finishing processes.

MULTIPLE PRODUCTS—RELATIVE VALUES

Not applicable.

WASTE

Rag waste may be incurred in our operations. Our records shall show the quantity of rag waste, if any, and its value. In instances where rag waste occurs and it is impractical to account for the actual quantity of rag waste incurred, it shall be assumed in liquidation that such rag waste constituted 2 percent of the piece goods put into the finishing processes.

SHRINKAGE, GAIN, AND SPOILAGE

Our records shall show the yardage lost by shrinkage or gained by stretching during manufacture, and the quantity of remnants resulting and of spoilage incurred, if any.

PROCEDURES AND RECORDS MAINTAINED

We will maintain records to establish:

1. The identity and specifications of the merchandise we designate;

2. The quantity of merchandise of the same kind and quality as the designated merchandise we used to produce the exported articles;

3. That, within 3 years after receiving it at our factory, we used the designated merchandise to produce articles. During the same 3-year period, we produced the exported articles.

We realize that to obtain drawback we must establish that the completed articles were exported within 5 years after the importation of the imported merchandise.

Our records establishing our compliance with these requirements will be available for audit by Customs during business hours. We understand that drawback is not payable without proof of compliance with title 19, United States Code, section 1313(b), and part 22 of the Customs Regulations.

INVENTORY PROCEDURES

Our inventory procedures will show how we will satisfy the legal requirements discussed under the heading "Procedures and Records Maintained." We understand that if our records do not show that we satisfy those legal requirements, drawback cannot be paid.

BASIS OF CLAIM FOR DRAWBACK

Claims for drawback will be based on the quantity of greige piece goods used to produce the finished piece goods for export less the value of rag waste, the quantity of remnants, and spoilage, if any.

Proper allowance will be made for any shrinkage or stretching.

AGREEMENTS

The corporation specifically agrees that it will:

1. Comply fully with the terms of this statement when claiming drawback;

2. Open its factory and records for examination at all reasonable hours be authorized Government officers;

3. Keep its drawback related records and supporting data for at least 3 years from the date of liquidation of any drawback claim predicated in whole or in part upon this statement;

4. Keep this statement current by reporting promptly to the regional commissioner who liquidates its claims any changes in the number or locations of its offices or factories, the corporate name, or the corporate organization by succession or reincorporation;

5. Keep a copy of this statement on file for ready reference by employees and require all officials and employees concerned to familiarize themselves with the provisions of this statement; and,

6. Issue instructions to insure proper compliance with title 19, United States Code, section 1313(b), part 22 of the Customs Regulations and this statement.

(T.D. 80-268)

Effective Date of Revocation of Customhouse Cartman's License No. 168 Issued to Di Jub Leasing Corp.

By T. D. 80-252, dated October 7, 1980 (45 F.R. 69337, Oct. 20, 1980), the Commissioner of Customs revoked customhouse cartman's license No. 168. The effective date of the revocation should have read "October 28, 1980." Pursuant to a request on behalf of the Di Jub Leasing Corp., the effective date is amended to November 12, 1980.

Dated: October 28, 1980.

WILLIAM T. ARCHEY
(For Commissioner of Customs).

[Published in the Federal Register, Nov. 6, 1980 (45 F.R. 73847)]

(T.D. 80-269)

R.B.K. Importers, Inc.

Notice of recordation of trade name

On August 14, 1980, there was published in the Federal Register (45 F.R. 54173) a notice of application for the recordation under section 42 of the act of July 5, 1946, as amended (15 U.S.C. 1124), of the trade name R.B.K. Importers, Inc. The notice advised that prior to final action on the application, filed pursuant to section 133.12, Customs Regulations (19 CFR 133.12), consideration would be given to relevant data, views, or arguments submitted in opposition to the recordation and received not later than 30 days from the date of publication of the notice. No responses were received in opposition to the application. The name "R.B.K. Importers, Inc." is hereby recorded as the trade name of R.B.K. Importers, Inc., a corporation organized under the laws of the State of Delaware, located at 940 South Alameda Street, Los Angeles, Calif. 90021, when applied to women's wearing apparel and sportswear including but not limited to sweaters, skirts, tops, jackets, shirts, jeans and slacks, manufactured in Macau, Korea,

Taiwan, Hong Kong, China, Japan, Italy, and Greece. No foreign firms are authorized to use the trade name.

Dated: November 5, 1980.

DONALD W. LEWIS,
Director,
Office of Regulations and Rulings.

[Published in the Federal Register, Nov. 10, 1980 (45 F.R. 74608)]

(T.D. 80-270)

Donnkenny, Inc.

Notice of recordation of trade name

On August 14, 1980, there was published in the Federal Register (45 F.R. 54173) a notice of application for the recordation under section 42 of the act of July 15, 1946, as amended (15 U.S.C. 1124), of the trade name Donnkenny, Inc. The notice advised that prior to final action on the application, filed pursuant to section 133.12, Customs Regulations (19 CFR 133.12), consideration would be given to relevant date, views, or arguments submitted in opposition to the recordation and received not later than 30 days from the date of publication of the notice. No responses were received in opposition to the application.

The name "Donnkenny, Inc." is hereby recorded as the trade name of Donnkenny, Inc., a corporation organized under the laws of the State of Delaware, located at 1411 Broadway, New York, N.Y. 10018, when applied to women's wearing apparel and sportswear including but not limited to sweaters, skirts, tops, jackets, shirts, jeans, and slacks, manufactured in Macau, Korea, Taiwan, Hong Kong, China, and Japan. No foreign firm is authorized to use the trade name.

Dated: November 5, 1980.

DONALD W. LEWIS,
Director,
Office of Regulations and Rulings.

[Published in the Federal Register, Nov. 10, 1980 (45 F.R. 74608)]

ERRATUM

In CUSTOMS BULLETIN, volume 14, No. 42, dated October 15, 1980, in T.D. 80–241, on page 4, delete the information concerning Hardwicke's Ammex Ltd. from the list.

In CUSTOMS BULLETIN, volume 14, No. 43, dated October 22, 1980, in T.D. 80–249, under Finland the value should be .273187 instead of .273197.

331-469 O - 80 -3

Decisions of the United States Court of Customs and Patent Appeals

(C.A.D. 1254)

WESTWAY TRADING CORPORATION *v.* THE UNITED STATES, No. 80–9

1. CLASSIFICATION OF IMPORTS—SUGAR—DUTY EXEMPTION—PRESIDENTIAL PROCLAMATION

Appeal from the judgment of the United States Customs Court, —— Cust. Ct. ——, C.D. 4826, 483 F. Supp. 300 (1979), which granted the Government's cross-motion for summary judgment and sustained its position that sugar imported into the United States by appellant was not exempt from increased duty under item 155.20, TSUS, under Presidential Proclamation 4466 issued October 4, 1976, which modified Presidential Proclamation 4463 issued September 21, 1976. Affirmed.

2. PRESUMPTION OF CORRECTNESS

A presumption of correctness attaches to the decision of the Secretary of the Treasury or his delegate.

3. DATE OF EXPORTATION

"Date of exportation" has been uniformly interpreted in court decisions and regulations to mean the date on which merchandise finally leaves the country of exportation, regardless of departures from intermediate ports.

4. ID.

More recent interpretation by Commissioner of Customs of "exported to the United States before" a certain date, rather than earlier interpretation of "exported to the United States on or after" a certain date, would have been intended by the President in promulgating Presidential Proclamation 4466.

5. BURDEN OF PROOF

Appellant failed to carry its burden of proving that the involved sugar was exempt from increased duty.

U.S. Court of Customs and Patent Appeals, October 30, 1980

Appeal from U.S. Customs Court, C.D. 4826

[Affirmed.]

Murray Sklaroff, attorney of record for appellant

Alice Daniel, Assistant Attorney General, *David M. Cohen*, Director, Commercial Litigation Branch, *Joseph I. Liebman*, Attorney in Charge, Field Office for Customs Litigation, *Saul Davis*, Commercial Litigation Branch, attorneys of record for appellee.

[Oral argument on October 6, 1980 by Murray Sklaroff for appellant and by Saul Davis for appellee]

Before MARKEY, Chief Judge, RICH, BALDWIN, MILLER, and NIES, Associate Judges.

MILLER, Judge.

This is an [1] appeal from the judgment of the U.S. Customs Court, —— Cust. Ct. ——, C.D. 4826, 483 F. Supp. 300 (1979), granting the Government's cross-motion for summary judgment and sustaining its position that sugar imported into the United States by appellant was not exempt from increased duty under item 155.20, TSUS, under Presidential Proclamation 4466 (PP 4466) issued October 4, 1976, which modified Presidential Proclamation 4463 (PP 4463) issued September 21, 1976. We affirm.

BACKGROUND

Increased duty on sugar imported by Westway Trading Corp. (Westway) was assessed by the Customs Service under PP 4463.[1] Westway claims that its sugar was exempt under PP 4466 [2] from the increase. The sugar in question was laded at the port of Salaverry, Peru. The ship departed Salaverry on September 18, 1976, and proceeded to Pimental, Peru, from which it departed for the United States on October 5, 1976. On September 21, 1976, PP 4463 was issued increasing the duty on sugar imported into the United States. However, on October 4, 1976, PP 4466 was issued amending PP 4463 by exempting sugar "exported to the United States before 12:01 a.m. * * * September 21, 1976."

---

[1] 41 F.R. 41681 (1976). PP 4463 provides:

* * * * * * *

B. The rates of duty in rate column numbered 1 for items 155.20 and 155.30 of Subpart A, Part 10, Schedule 1 of the TSUS, are modified, and the following rates are established:

155.20	1.9875¢ per lb. less 0.028125¢ per lb. for each degree under 100 degrees (and fractions of a degree in proportion) but not less than 1.284375¢ per lb.
155.30	Dutiable on total sugars at the rate per lb. applicable under Item 155.20 to sugar testing 100 degrees.

C. The provisions of this proclamation shall become effective * * * on and after the date of this proclamation and shall remain in effect until the President otherwise proclaims or until otherwise superseded by law.

[2] 41 F.R. 44081 (1976); PP 4466 provides:

Now, therefore, I, Gerald R. Ford, President of the United States of America, * * * [in order to alleviate hardships which may result from increasing the rate of duty with respect to certain goods that were exported prior to the effective date of PP 4463] do hereby proclaim that paragraph C of Proclamation No. 4463 of September 21, 1976, is hereby amended to read as follows:

C. * * * [T]he provisions of this proclamation *shall not be effective with respect to articles exported to the United States before 12:01 a.m.* (U.S. eastern daylight savings time), September 21, 1976. * * * [Italic supplied.]

The Customs Court held that Westway failed to rebut the presumption of correctness attaching to the determination of the District Director of Customs. It stated that by use of the phrase "exported to the United States" the President intended that "exported" be construed as the final act of departing the country of exportation. It based this conclusion on instructions issued on January 24, 1972, by telegram from the Commissioner of Customs (Commissioner)[3] interpreting additional duty order No. 4 (ADO–4)[4] and on prior decisions and regulations[5] interpreting the phrase "date of exportation" in customs valuation cases.

OPINION

Appellant contends that the sugar laded at Salaverry was exported on the date that it left that port and bases its contention on Presidential Proclamation 4074 (PP 4074),[6] as modified by additional duty

---

[3] The Commissioner's telegram of Jan. 24, 1972, stated:

To all Regional Commissioners, Regional Directors of Security and Audit, and District Directors of Customs

Rebutel January 18, 1972, concerning additional duty order No. 4, the date of exportation of articles exported to the United States on or after October 1, 1971, will be determined in accordance with section 14.3(d) Customs Regulations, including footnote No. 5. You will not repeat not use method authorized in Butel September 3, 1971, for shipments by vessel where goods were laden at multiple ports within a single country.

[4] 37 F.R. 887 (1971). ADO–4 provides:

Articles Exempt from Additional Duty Imposed Under Subpart C of Part 2 of the Appendix to the Tariff Schedules of the United States

* * * I hereby determine that it is consistent with safeguarding the balance of payments position of the United States to establish exemptions from the additional duty provided for in subpart C as set forth in Headnote 5 thereof, which I hereby amend as follows:

* * * * * * *

A new paragraph, designated as paragraph (i), is added reading as follows:

(i) Articles exported to the United States on or after October 1, 1971, irrespective of country of origin, which are described in the textile and apparel categories for wool and man-made fibers published in a notice in the Federal Register * * *.

[5] 19 CFR 152.1 (1979) provides:

(C) *Date of exportation.* "Date of exportation," or the "time of exportation," referred to in sections 402 and 402a, Tariff Act of 1930, as amended (19 U.S.C. 1401a and 1402), means the actual date merchandise finally leaves the country of exportation for the United States.

The predecessor to 19 CFR 152.1(c) was 19 CFR 14.3 (1972), which provided:

(b) The time of exportation referred to in section 402 and section 402a of the tariff act, as amended, is the date on which the merchandise actually leaves the country of exportation for the United States.[5]

[5] If the merchandise is shipped directly by water from the country of export, the date of the sailing of the vessel is the date of exportation. Since the act of exportation is not complete until the merchandise finally leaves the jurisdiction of the exporting country, if a vessel with merchandise on board sails from two or more ports, * * * of the exporting country, * * * the date the vessel on which the merchandise finally leaves the exporting country sails from the last port thereof is the date of exportation. * * *

[6] 36 F.R. 15724 (1971). PP 4074 provides:

* * * * * * *

Now, Therefore, I, Richard Nixon, President of the United States of America, * * * [to assure our security by enhancing our international competitive position and to bolster our balance of payments position] do proclaim as follows:

* * * * * * *

(2) [Prior Presidential] proclamations are suspended only insofar as is required to assess a surcharge in the form of a supplemental duty amounting to 10 percent ad valorem. Such supplemental duty shall be imposed on all dutiable articles imported into the customs territory of the United States from outside thereof, which are entered, or withdrawn from warehouse, for consumption after 12:01 a.m., Aug. 16, 1971 * * *.

* * * * * * *

Subpart C—Temporary Modifications for Balance of Payments Purposes

Subpart C headnotes:

* * * * * * *

2. *Additional duties imposed.*—* * * The provisions for these duties are effective with respect to articles entered on and after 12:01 a.m., Aug. 16, 1971, and shall continue in effect until modified or terminated by the President or by the Secretary of the Treasury * * *.

order No. 3 (ADO–3),[7] and a Commissioner's telegram of September 3, 1971.[8] It argues that the language "exported to the United States before" a certain date is common to both PP 4074 (as modified by ADO–3) and PP 4466, which was adopted for the purpose of alleviating hardships to importers;[9] that, historically, such language has only been used twice and must have been intended to have the same meaning in both instances. Appellant also asserts that prior decisions interpreting the phrase "date of exportation" involved valuation cases and were unrelated to an expressed desire of the President to alleviate hardship.

The Government adopts the rationale of the Customs Court, relying on the Commissioner's telegram of January 24, 1972, interpreting ADO–4, and customs regulations and decisions interpreting "date of exportation." It underscores the fact that ADO–4 and the Commissioner's interpreting telegram of January 24, 1972, were later in time than ADO–3 and the interpreting telegram of September 3, 1971. It argues that the President would have been aware of the conflict between the interpretations of ADO–3 and ADO–4 and that, in using the language "exported to the United States," he intended the Commissioner's most recent interpretation to apply.

The decisive issue is whether Westway has carried its burden of proving that the determination of the District Director of Customs was not correct. **[2]** A presumption of correctness attaches to the decision of the Secretary of the Treasury or his delegate, who, in this case, was the District Director of Customs, 28 U.S.C. 2635(a) (1970); *United States* v. *Hugo Stinnes Steel & Metals Co.*, 66 CCPA ——, ——, C.A.D. 1226, 599 F. 2d 1037, 1042 (1979). The only evidence of Presidential intent cited by Westway is the earlier and unrepeated

---

[7] 36 F.R. 17667 (1971). ADO–3 provides:

Articles Exempt from Additional Duty Imported under Subpart C of Part 2 of the Appendix to the Tariff Schedules of the United States

* * * I hereby determine that it is consistent with safeguarding the balance of payments position of the United States to establish exemptions from the additional duty provided for in subpart C as set forth in headncte 5 thereof which I hereby amend to add the following:

(h) Articles exported to the United States before 12:01 a.m., Aug. 16, 1971, provided that any such articles entered for warehouse or placed in foreign trade zone shall be exempt only if withdrawn from warehouse for consumption or entered or withdrawn for consumption from a foreign trade zone under a request properly filed on or before Oct. 1, 1971.

[8] The Commissioner's telegram of Sept. 3, 1971, stated:

All Regional Commissioners and District Directors of Customs

In Presidential Proclamation 4074 of August 15, 1971, and Treasury Department additional duty orders issued under that proclamation, 12:01 a.m. means 12:01 a.m. U.S. eastern daylight savings time.

For the purpose of determining the date of exportation under the provisions of headnote 5(h) subpart C of part 2 of the appendix to TSUS, the rules set forth below shall be followed:

Where goods are exported from the country of exportation by vessel, and where the vessel lades merchandise at 2 or more ports within that country, the date of exportation for each of the shipments shall be the date upon which the shipment left the port at which it was laden. . . .

[9] The Customs Service indicated that one of the purposes underlying PP 4074 as modified by ADO–3 was "to alleviate a widespread financial hardship to importers whose merchandise had been exported [to the United States] before the surcharge was imposed and thus had no advance notice of the additional duties." PP 4466 expressly states that one of its purposes is "to alleviate hardships which may result from increasing the rate of duty with respect to certain goods that were exported [to the United States] prior to the effective date of [PP 4463]."

interpretation of "date of exportation" contained in the September 3, 1971, telegram issued by the Commissioner of Customs. **[3]** All court decisions, regulations, and the more recent Commissioner's telegram have uniformly interpreted "date of exportation" to mean the date on which merchandise in issue finally leaves the country of exportation, regardless of departures from intermediate ports.

[4] It was reasonable for the District Director of Customs to infer that the President would have been aware that the Commissioner's September 3, 1971, telegram interpreting "exported to the United States before" a certain date in ADO–3 was unique and that the case law,[10] Customs regulations,[11] and the Commissioner's more recent telegram interpreting "exported to the United States on or after" a certain date in ADO–4 were inconsistent with that interpretation. Also, we note that the telegram interpreting ADO–4 expressly directed that the method authorized in the telegram of September 3, 1971, for determining date of exportation for shipments where goods are laded at multiple ports within a single country was not to be followed. Accordingly, we conclude that the interpretation given ADO–4, and not that given ADO–3, would have been intended by the President when he promulgated PP 4466.

[5] In view of the foregoing, we hold that Westway failed to carry its burden of proving that the involved sugar was exempt under Presidential Proclamation 4466 from increased duty.

The judgment of the Customs Court is *affirmed.*

---

[10] Since the decision in *Froman* v. *Peaslee*, 9 Fed. Cas. 452 (1857), the courts have consistently determined that merchandise is exported to the United States upon departing from the last port in the jurisdiction of the exporting country. See *D.N. & E. Walter & Co.* v. *United States*, 42 CCPA 114, C.A.D. 582 (1955); *Avakian Bros., Inc.* v. *United States*, 41 CCPA 80 C.A.D. 532 (1953). The fact that the cited cases dealt with the determination of "value" does not preclude reference to their interpretation of "exported." In each instance the court is concerned with the definition of a term consistently used in customs law. In addition, this court has approved adopting definitions by analogy to other areas of Customs law when necessary to define a term found in a Presidential proclamation. *United States* v. *Hugo Stinnes Steel & Metals Co.*, *supra*.

[11] See note 5, supra.

Decisions of the United States Customs Court

United States Customs Court

One Federal Plaza
New York, N.Y. 10007

Chief Judge

Edward D. Re

Judges

Paul P. Rao
Morgan Ford
Scovel Richardson
Frederick Landis
James L. Watson
Herbert N. Maletz
Bernard Newman
Nils A. Boe

Senior Judge

Samuel M. Rosenstein

Clerk

Joseph E. Lombardi

Customs Rules Decision

(C.R.D. 80–18)

ATLANTIC SUGAR, LTD., ET AL., PLAINTIFFS, *v.* THE UNITED STATES, DEFENDANT, AMSTAR CORPORATION, INTERVENOR

Memorandum Opinion and Order on Intervenor Amstar's Motion for Access to Documents

Court No. 80–5–00754

(Dated October 21, 1980)

WATSON, Judge: This is an action under 19 U.S.C. 1516a(a)(2) challenging the determination by the International Trade Commission that importations of sugar from Canada were causing material injury

to an industry in the United States. Intervenor Amstar, a domestic producer of sugar and the initiator of the administrative proceeding, now moves for access to confidential documents from that proceeding to which the plaintiffs were previously granted access by the court. *Atlantic Sugar Ltd., et al.* v. *United States*, 85 Cust. Ct. ——, C.R.D. 80–10, modification and stay denied, 85 Cust. Ct. ——, C.R.D. 80–14.

Plaintiffs have not responded and the defendant United States objects only to the inclusion of Amstar's in-house counsel in the proposed order.

The court is of the opinion that in actions such as these the confidential business information of business competitors should not be disclosed to in-house counsel unless a party has no other reasonable way of adequately preparing and presenting its arguments. This preference is not based on any reservation as to the integrity of in-house counsel but is intended to avoid placing them under the unnatural and unremitting strain of having to exercise constant self-censorship in their normal working relations.

It is therefore,

ORDERED, that Amstar's motion be granted only to the extent that its independent counsel shall be granted access to document Nos. 2, 3, 9, 10, 11, 25, 42, 45, 49, 50, 52, 56, 57, and 61 on list No. 2 under the terms of the court's order of September 12, 1980 and it is further

ORDERED, that the above-listed documents shall be made available for examination and copying by those granted access hereunder at the office of the Clerk of the Court or the office of the International Trade Commission for the 30-day period commencing on the date of entry of this order.

Appeal to U.S. Court of Customs and Patent Appeals

Appeal 81-3.—United States *v.* Arnold Pickle & Olive Co.—CUCUMBERS IN BRINE—PACKING COSTS—EXPORT VALUE.—Appeal from C.D. 4868.

The merchandise in this case, cucumbers packed in brine exported from Mexico, is subject to appraisement on the basis of export value as defined in section 402(b), Tariff Act of 1930, as amended by the Customs Simplification Act of 1956. On plaintiff-appellee's motion for partial summary judgment and defendant-appellant's motion for judgment on the pleading before the Customs Court, the court held that the appraisement was erroneous and that the prices at which the independent farmers in the principal markets of Mexico, at the times of exportation of the merchandise in issue, freely offered such merchandise in the usual wholesale quantities and in the ordinary course of trade for exportation to the United States were prices which constituted an export value for the cucumbers, exclusive of the cost of their packing. Plaintiff was granted partial summary judgment, and defendant's motion for judgment on the pleadings was denied. *Arnold Pickle & Olive Co.* v. *United States*, 79 Cust. Ct. 50, C.D. 4712 (1977).

The trial in this case was limited to the question of the costs of packing the cucumbers for shipment to the United States. The Customs Court held that plaintiff had proven the packing costs by a preponderance of the evidence; that the testimony of plaintiff's witnesses was sufficient to prove the costs of labor, supervision, salt, ice, grading machinery, and scales, as well as the free availability of well water; and that the cost of packing for each truckload entry was $43.56210 plus, for those entries in which ice was used, the cost of ice set out in plaintiff's exhibit 17.

It is claimed that the Customs Court erred in entering judgment for plaintiff, appellee, rather than entering judgment for defendant, appellant, dismissing the consolidated civil action; in finding and holding that the merchandise in issue, cucumbers packed in brine, is properly dutiable on the basis of export value, section 402(b), Tariff Act of 1930, as amended by the Customs Simplification Act of 1956,

at the price of fresh cucumbers sold by Mexican growers to the exporter plus the costs of readying and packing the cucumbers for exportation to the United States; in not finding and holding that the merchandise in issue was properly appraised on the basis of export value, as defined, supra, and that the appraised values were correct; in finding and holding that the merchandise undergoing appraisement was the basic article, cucumbers, plus packing, which consisted of placing those cucumbers in brine; in not finding and holding that the merchandise undergoing appraisement was cucumbers packed in brine; in finding and holding that the plaintiff, appellee herein, overcame its dual burden of proof; in not finding and holding that appellee failed to prove the export value of the merchandise; in not finding and holding that the condition in which the merchandise arrived in this country, i.e., cucumbers packed in brine, should be the basis of determining the dutiable value of the merchandise; in not dismissing this action on the basis of collateral estoppel by virtue of the decision in *Arnold Pickle & Olive Co.* v. *United States*, 75 Cust. Ct. 154, C.D. 4620 (1975).

Recent Unpublished Customs Service Decisions

The following listing of recent administrative decisions issued by the Office of Regulations and Rulings, U.S. Customs Service, and not otherwise published, is published for the information of Customs officers and the importing community. Although the decisions are not of sufficient general interest to warrant publication as Treasury decisions, the listing describes the issues involved and is intended to aid Customs officers and concerned members of the public in identifying matters of interest which recently have been considered by the Office of Regulations and Rulings.

A copy of any decision included in this listing, identified by its date and file number, may be obtained in a form appropriate for public distribution upon written request to the Office of Regulations and Rulings, attention: Legal Reference Area, room 2404, U.S. Customs Service, 1301 Constitution Avenue NW., Washington, D.C. 20229. These copies will be made available at a cost to the requester of 10 cents per page. However, the Customs Service will waive this charge if the total number of pages copied is 10 or less.

Decisions listed in earlier issues of the CUSTOMS BULLETIN, through July 2, 1980, are available in microfiche format at a cost of $23.85 (15 cents per sheet of fiche). It is anticipated that additions to the microfiche will be made quarterly and subscriptions are available. Requests for the microfiche now available and for subscriptions should be directed to the Legal Reference Area. Subscribers will automatically receive updates as they are issued and will be billed accordingly.

Dated: October 31, 1980.

JOHN T. ROTH,
Acting Director,
Regulations and Research Division.

Date of decision	File No.	Issue
10- 8-80	104420	Vessel repair: Dutiability of foreign repairs performed under warranty
10- 2-80	104772	Vessels: Dutiability of foreign-built hovercraft and speedboats

Date of decision	File No.	Issue
10-10-80	104787	Carrier control: Instances in which Customs has imposed forfeitures on foreign salvors for violations of 46 U.S.C. 316(d)
10- 2-80	104873	Carrier control: Application of coastwise law to the movement of a foreign storage vessel from its permanent station, for safety purposes, during the transfer Alaskan oil
10- 7-80	104878	Carrier control: Towing by foreign vessels between U.S. ports of domestic water craft which are unfit for their intended service
9-24-80	104888	Vessels: Exemption from payment of special tonnage tax and light money of vessels from the People's Republic of China
10- 1-80	104889	Carrier control: Whether a vessel which transports merchandise from one U.S. port to another and there unlades the merchandise for processing, to be reladen on board the same vessel for transportation foreign, is in the coastwise trade
10- 3-80	104898	Carrier control: Waiver of penalty in coastwise law violation case due to circumstances of hurricane
10-10-80	104908	Vessels: Exemption from payment of special tonnage tax and light money of vessels from the People's Republic of China
10-15-80	104917	Carrier control: Whether the use of a foreign-flag vessel to conduct research in U.S. waters is a use in coastwise trade
10-20-80	712519	Prohibited and restricted importations: Whether certain articles of wearing apparel, assembled by inmates of a Mexican prison from components of U.S. origin, are prohibited from entering the United States under 19 U.S.C. 1307
10- 7-80	713438	Country-of-origin marking: Paperboard coin holders imported with commemorative coins minted in the United States
3-18-80	060576	Classification: Naphtha solvents (403.90, 475.35)
2-19-80	060869	Classification: Insect repellent (403.60, 405.15)
10- 3-80	062773	Classification: Medallion (740.10, 740.38)
7-11-80	062986	Classification: Chocolate powder mix (183.05)
8-29-80	062987	Classification: Printed materials (270.25, 270.85, 274.75)
9-15-80	064445	Classification: Cheesecloth wipes (366.27, 385.30, 386.50
10- 9-80	064484	Classification: Plastic bank (772.15)
9- 7-80	064723	Classification: Surgical scissors (650.92, 709.27)
10- 9-80	064885	Classification: Cosmetic emulsion preservative (409.00, 413.51)
10- 9-80	064997	Classification: Eye stay for athletic footwear (386.50, 389. 62, 657.25, 774.50)
10- 3-80	065265	Classification: Beachcomber sandals (700.60)
10- 2-80	065364	Classification: Horseshoe magnets (682.70, 737.95)
10- 1-80	065386	Classification: Plastic tubing (771.43, 771.55)
6-29-80	066015	Classification: Aprons (382.33, 772.30)

Date of decision	File No.	Issue
10- 3-80	066019	Classification: Automobile antitheft device (657.25, 657.40, 646.92, 692.32)
9-16-80	066047	Classification: Plastic tubing (771.55, 772.65)
9- 3-80	066129	Classification: Jackets (380.84)
10- 8-80	066229	Classification: Sheepskin buff pad (791.19)
9-16-80	066257	Classification: Bagging machine (662.20)
10- 2-80	066355	Classification: Cutting tools (649.43, 649.46)
10- 9-80	066387	Classification: Cyclic organic chemicals (404.46)

International Trade Commission Notices

Investigations by the U.S. International Trade Commission

DEPARTMENT OF THE TREASURY, *November 13, 1980.*

The appended notices relating to investigations by the U.S. International Trade Commission are published for the information of Customs officers and others concerned.

R. E. CHASEN,
Commissioner of Customs.

In the Matter of CERTAIN CATHODE SPUTTER COATED GLASS TRANSPARENCIES	Investigation No. 337-TA-79

Notice of Termination

AGENCY: U.S. International Trade Commission.

ACTION: Termination of Investigation No. 337-TA-79, Certain Cathode Sputter Coated Glass Transparencies.

SUMMARY: The parties to this investigation have filed a joint motion to terminate based upon a settlement agreement. After reviewing the record, including comments from interested Federal agencies and private parties, the Commission has terminated this investigation.

SUPPLEMENTARY INFORMATION: In connection with the Commission's investigation under section 337 of the Tariff Act of 1930, as amended (19 U.S.C. 1337) of alleged unfair methods of competition and unfair acts in the importation or sale of certain cathode sputter coated glass transparencies in the United States, the complainant, the respondents, and the Commission investigative attorney filed a motion on April 25, 1980 (motion No. 79-2), to terminate this investigation on the basis of a settlement agreement.

On May 28, 1980, the administrative law judge filed her recommendation that the motion be granted. Notice of the pendency of the motion to terminate and the general nature of the settlement agreement were published in the Federal Register on July 21, 1980 (45 CFR 48751).

RECONSIDERATION: Any party wishing to petition for reconsideration of the Commission's action must do so within 14 days of service of the Commission action and order. Such petitions must be in accord with Commission rule 210.56 (19 CFR 210.56).

PUBLIC ACCESS TO RECORD: Copies of the Commission's action and order, and any other public document in this investigation are available to the public during official working hours (8:45 a.m. to 5:15 p.m.) in the Office of the Secretary, U.S. International Trade Commission, 701 E Street NW., Washington, D.C. 20436; 202-523-0161.

FOR FURTHER INFORMATION CONTACT: Scott Daniels, Office of the General Counsel, U.S. International Trade Commission, 701 E Street NW., Washington, D.C. 20436; 202-523-0480.

By order of the Commission.

Issued: October 22, 1980.

KENNETH R. MASON,
Secretary.

In the Matter of CERTAIN COIN-OPERATED AUDIO VISUAL GAMES AND COMPONENTS THEREOF	Investigation No. 337-TA-87

Notice of Prehearing Conference and Hearing

Notice is hereby given that a prehearing conference will be held in this case at 9 a.m. on November 18, 1980, in the Dodge Center, room 201, 1010 Wisconsin Avenue NW., Washington, D.C., and the hearing will commence immediately thereafter.

The Secretary shall publish this notice in the Federal Register.

Issued: October 24, 1980.

JANET D. SAXON,
Administrative Law Judge.

In the Matter of CERTAIN COMPUTER FORMS FEEDING TRACTORS AND COMPONENTS THEREOF	Investigation No. 337–TA–77

Notice of Commission Request for Comments Regarding Settlement Agreement

AGENCY: U.S. International Trade Commission.

ACTION: Request for comments from the public regarding proposed settlement agreement.

SUMMARY: The proposed settlement agreement would result in termination of investigation No. 337–TA–77. This notice requests comments from the public on the proposed settlement agreement within 30 days of publication of this notice in the Federal Register.

DATES: Comments will be considered if received within 30 days of publication of this notice. Comments should conform with Commission rule 201.8 (19 CFR 201.8), and should be addressed to Kenneth R. Mason, Secretary, U.S. International Trade Commission, 701 E Street NW., Washington, D.C. 20436.

FOR FURTHER INFORMATION CONTACT: Warren H. Maruyama, Office of the General Counsel, U.S. International Trade Commission, 701 E Street NW., Washington, D.C. 20436; 202–523–0143.

SUPPLEMENTARY INFORMATION: On August 19, 1980, complainant Precision Handling Devices, Inc., respondents Shinshu Seiki Co. and Epson America, Inc., and the Commission investigative attorney filed a joint motion to terminate the Commission's investigation, under section 337 of the Tariff Act of 1930 (19 U.S.C. 1337), of alleged unfair methods of competition and unfair acts in the importation and sale of certain computer forms feeding tractors and components. The administrative law judge (ALJ) recommended on September 2, 1980, that the Commission grant the motion to terminate.

This investigation commenced on December 19, 1979, when Precision Handling Devices, Inc. filed a complaint with the Commission, alleging that respondents Shinshu Seiki Co., Ltd., and Epson America, Inc. had violated section 337 of the Tariff Act of 1930. Precision specifically alleged that Shinshu Seiki and Epson America had imported and sold in the United States certain computer forms feeding tractors which infringed claim 5 of U.S. Letters Patent 3,825,162, resulting in substantial injury to an efficiently and economically operated U.S. industry.

On January 15, 1980, the Commission instituted investigation No. 337–TA–77 for the purpose of determining whether section 337 had been violated. Notice of the institution of the investigation was published in the Federal Register on January 30, 1980 (45 F.R. 6867).

Complainant, respondents and the Commission investigative attorney have jointly moved to terminate the investigation, on the grounds that the parties have resolved the dispute by entering into a settlement agreement.

WRITTEN COMMENTS REQUESTED

Because all parties, including the Commission investigative attorney, have joined the motion to terminate, and because the ALJ has recommended the motion be granted, there will be no oral argument regarding the proposed termination of the investigation. However, in order to discharge its statutory obligation to consider the public interest, the Commission seeks written comments from interested persons regarding the effects of terminating this investigation on (1) the public health and welfare, (2) competitive conditions in the U.S. economy, (3) the production of like or directly competitive articles in the United States, and (4) U.S. consumers. All written comments must be filed with the Secretary of the Commission no later than 30 days after publication of this notice in the Federal Register. In addition, pursuant to 19 CFR section 210.14(a)(2), the Commission has requested comments from the Department of Health and Human Services, the Department of Justice, the Federal Trade Commission, and the U.S. Customs Service, on the effects of the proposed settlement agreement.

THE SETTLEMENT AGREEMENT

Complainant Precision Handling Devices and respondents Shinshu Seiki and Epson America entered into the settlement agreement on June 30, 1980. The agreement disposes of all issues pertaining to the alleged infringement of U.S. Letters Patent 3,825,162 by the importation of certain computer forms feeding tractors and components manufactured by Shinshu Seiki and sold in the United States through Epson America. Under the terms of the agreement, respondents, while not admitting the patent's validity or infringement, have agreed to change the design of the disputed tractors to one conceded by complainant to be outside the claims of the patent. Respondents also agreed to pay a sum of money to complainant. The agreement permits respondents to import and sell a limited number of previously manufactured tractors of the type presently under investigation. The precise amount of money paid in the settlement and the maximum number of previously manufactured tractors permitted to be imported are

confidential information subject to a protective order, and are not available to the public.

ADDITIONAL INFORMATION

The original and 19 true copies of all written submissions must be filed with the Secretary of the Commission, 701 E Street NW., Washington, D.C. 20436; 202-523-0161. All comments must be filed no later than 30 days after publication of this notice in the Federal Register. Any person desiring to submit a document (or portion thereof) to the Commission in confidence must request in camera treatment. Such request should be directed to the Secretary of the Commission and must include a full statement of the reasons the Commission should grant such treatment. The Commission will either accept the submissions in confidence or return it. All nonconfidential written submissions will be available for public inspection at the Secretary's Office.

By order of the Commission.

Issued: October 27, 1980.

KENNETH R. MASON,
Secretary.

(TA-131(b)-5, TA-503(a)-7, and 332-113)

Probable Economic Effects of Possible Tariff Reduction Under Section 124 of the Trade Act of 1974 and Designation of Certain Articles as Eligible Articles for Purposes of the Generalized System of Preferences

AGENCY: U.S. International Trade Commission.

ACTION: As a result of a request from the U.S. Trade Representative (USTR) received on September 24, 1980, the Commission has expanded the scope of investigation Nos. TA-131(b)-5, TA-503(a)-7, and 332-113 by the addition of articles classified in the following 15 items of the Tariff Schedules of the United States:

117.65	176.29	514.65	606.64
117.70	176.30	514.81	687.58
140.38	437.30	515.24	741.15
165.30	514.61	545.11	

With respect to the above items, the USTR has requested advice on the probable economic effects on U.S. industries producing like or directly competitive articles and on consumers of the reduction of United States duties on these articles by the maximum amount permissible under the authority granted to the President under section 124 of the Trade Act of 1974.

SUPPLEMENTARY INFORMATION: The Commission's initial notice of investigation Nos. TA-131(b)-5, TA-503(a)-7, and 332-113,

containing information on investigation coverage, the public hearing, and related information, was published in the Federal Register of August 27, 1980 (45 F.R. 57221).

SUPPLEMENTAL PUBLIC HEARING

A public hearing in connection with the above 15 additional items being considered in the investigation will be held in the Commission Hearing Room, 701 E Street NW., Washington, D.C. 20436, beginning at 10 a.m., e.s.t., on November 18, 1980. All persons shall have the right to appear by counsel or in person, to present information, and to be heard. Requests to appear at the public hearing should be filed with the Secretary, U.S. International Trade Commission, 701 E Street NW., Washington, D.C. 20436, not later than noon, November 13, 1980.

WRITTEN SUBMISSIONS

In lieu of or in addition to appearances at the public hearing, interested persons are invited to submit written statements concerning the investigation. All written statements, including prepared statements filed by witnesses at the public hearing, should include a summary of material included in the statement. Commercial or financial information which a submitter desires the Commission to treat as confidential must be submitted on separate sheets of paper, each clearly marked "Confidential Business Information" at the top. All submissions requesting confidential treatment must conform with the requirements of section 201.6 of the Commission's Rules of Practice and Procedure (19 CFR 201.6). All written submissions, except for confidential business information, will be made available for inspection by interested persons. To be insured of consideration by the Commission, written statements should be submitted at the earliest practicable date, but no later than November 26, 1980. All submissions should be addressed to the Secretary at the Commission's office in Washington, D.C.

By order of the Commission.

Issued: October 29, 1980.

KENNETH R. MASON,
Secretary.

(TA-503(a)-8 and 332-118)

President's List of Articles Which May Be Designated as Eligible Articles for Purposes of the Generalized System of Preferences

AGENCY: U.S. International Trade Commission

ACTION: In accordance with the provisions of section 503(a) and 131(b) of the Trade Act of 1974 (hereinafter referred to as the act)

and section 332(g) of the Tariff Act of 1930, as amended, the Commission has instituted investigation Nos. TA-503(a)-8 and 332-118 for the purpose of obtaining, to the extent practicable, information of the kind described in section 131(d) of the act. This information is for use in connection with the preparation of advice requested by the U.S. Trade Representative (USTR) with respect to certain listed articles as to the probable economic effects on U.S. industries producing like or directly competitive articles and on consumers of the elimination of U.S. import duties under the U.S. generalized system of preferences (GSP), set forth in title V of the act.

EFFECTIVE DATE: October 29, 1980.

FOR FURTHER INFORMATION CONTACT: (1) Agricultural products, Mr. Edward Furlow (202-523-0234), Office of Industries; (2) textile products, Mr. Reuben Schwartz, (202-523-0114), Office of Industries; (3) chemical products, Dr. Aimison Jonnard (202-523-0423), Office of Industries; (4) minerals and metals, Mr. Larry Brookhart (202-523-0275), Office of Industries; (5) machinery and equipment, Mr. Aaron Chesser (202-523-0353), Office of Industries; (6) miscellaneous manufacturers, Mr. Walter Trezevant (202-724-1719), Office of Industries; and (7) legal aspects, Mr. William Gearhart, (202-523-0487), Office of the General Counsel. All of the above persons are located at the U.S. International Trade Commission, 701 E Street NW, Washington, D.C. 20436.

SUPPLEMENTARY INFORMATION: On October 10, 1980, in accordance with section 503(a) and 131(a) of the act and pursuant to the authority of the President delegated to the USTR by Executive Order 11846, as amended by Executive Order 11947, the USTR furnished the U.S. International Trade Commission a list of items which may be designated as eligible articles for purposes of the GSP (see annex I).

In providing its advice, the USTR requested the Commission to assume that benefits of the GSP would not apply to imports that would be excluded from receiving such benefits by virtue of the competitive need limitations specified in section 504(c) of the act.

For TSUS item 687.58, the USTR specifically requested that advice be provided on each statistical annotation of that item.

Section 504(d) of the act exempts from one of the competitive-need limits in section 504(c) articles for which no like or directly competitive article was being produced in the United States on the date of enactment of the act. Accordingly, pursuant to the authority of section 332(g) of the Tariff Act of 1930, as amended (19 U.S.C. 1332(g)), and in conformity with the delegation of authority from the President to

him of Executive Order 11846 as amended by Executive Order 11947, the USTR requested that the Commission also provide advice with respect to whether products like or directly competitive with any articles contained in the TSUS(A) items in annexes I and II were being produced in the United States on January 3, 1975. A list giving detailed descriptions of the articles contained in the TSUS(A) items identified in annexes I and II is available upon request from the Secretary, U.S. International Trade Commission, 701 E Street NW., Washington, D.C. 20436; 202-523-5178.

The USTR announced the items which have been sent to the Commission for probable effects advice in the October 14, 1980, Federal Register (45 F.R. 67810). The USTR notice includes items in annex I of this notice as well as the following TSUS items being investigated for GSP designation in the Commission's ongoing investigation Nos. TA-131(b)-5, TA-503(a)-7 and 332-113 (announced in Federal Register of Aug. 27, 1980 (45 F.R. 57221)): 112.34, 112.86, 141.78, 148.52, 148.54, 150.05, 161.07, 184.53, 650.47, 687.58, and 727.11. These latter items will not be reexamined in investigations Nos. TA-503(a)-8 and 332-118, the subject of this notice.

PUBLIC HEARING

A public hearing in connection with the investigation will be held in the Commission Hearing Room, 701 E Street NW., Washington, D.C. 20436, beginning at 10 a.m., e.s.t., on January 13, 1981, to be continued on January 14, 1981, if required. All persons shall have the right to appear by counsel or in person, to present information, and to be heard. Requests to appear at the public hearing should be filed with the Secretary, U.S. International Trade Commission, 701 E Street NW., Washington, D.C. 20436, not later than noon, January 8, 1981.

WRITTEN SUBMISSIONS

In lieu of or in addition to appearances at the public hearing, interested persons are invited to submit written statements concerning the investigation. All written statements, including prepared statements filed by witnesses at the public hearing, should include a summary of material included in the statement. Commercial or financial information which a submitter desires the Commission to treat as confidential must be submitted on separate sheets of paper, each clearly marked "Confidential Business Information" at the top. All submissions requesting confidential treatment must conform with the requirements of section 201.6 of the Commission's Rules of Practice and Procedure (19 CFR 201.6). All written submissions, except for

confidential business information, will be made available for inspection by interested persons. To be ensured of consideration by the Commission, written statements should be submitted at the earliest practicable date, but no later than January 28, 1981. All submissions should be addressed to the Secretary at the Commission's office in Washington D.C.

By order of the Commission.

Issued: October 30, 1980.

KENNETH R. MASON,
Secretary.

Attachment.

ANNEX I

ARTICLES BEING CONSIDERED FOR DESIGNATION AS ELIGIBLE ARTICLES FOR PURPOSES OF THE GSP

112. 22(pt)
117. 8875
121. 50(pt)
121. 64
135. 61
136. 20
136. 22
137. 10
137. 8782 (pt)
138. 4510
138. 4570
138. 4570 (pt) (sliced bamboo shoots)
138. 4570 (pt) (sliced water chestnuts)
140. 70
145. 50
145. 58(pt)
146. 58
146. 60
148. 24
169. 13(pt)
170. 63
182. 49
184. 51
240. 17
240. 17(pt)
353. 5012
360. 05
361. 2210
361. 2245
363. 75
363. 75(pt)
367. 3025
386. 0430
386. 0430 (pt)
386. 5040
386. 5040 (pt)
387. 34
387. 34(pt)
411. 60(pt)
412. 22
412. 22(pt)
412. 70(pt)
425. 9940
425. 9940 (pt)
472. 12
490. 12
533. 22
533. 64
533. 76
533. 78
546. 64
546. 68
650. 4920
687. 5810
687. 5811
687. 5813
687. 5815
687. 5817
687. 5819
687. 5821
687. 5823
687. 5825
687. 5827
687. 5831
687. 5833
687. 5835
687. 5838
687. 5840
687. 5841
687. 5842
687. 5844
687. 5845
687. 5847
687. 5848
687. 5853
687. 5854
687. 5856
687. 5859
687. 5861
687. 5862
687. 5866
687. 5867
687. 5868
687. 5870
687. 5881
687. 5883
687. 5886
705. 8540
705. 8540 (pt)
706. 2380
706. 2460
706. 30(pt)
706. 6045
715. 53(pt)

Annex II

ARTICLES BEING CONSIDERED FOR DESIGNATION AS NOT LIKE OR DIRECTLY COMPETITIVE WITH ANY ARTICLE PRODUCED IN THE UNITED STATES ON JANUARY 3, 1975

121.55
121.62
141.70
734.2040(pt)

In the Matter of Certain Multicellular Plastic Film	Investigation No. 337–TA–54A

Notice of Investigation

AGENCY: U.S. International Trade Commission.

ACTION: Institution of investigation to determine whether the process used by Huang Well Industrial Co. Ltd. to manufacture multicellular plastic film abroad would, if practiced in the United States, infringe claims 1 or 2 of U.S. Letters Patent 3,416,984.

AUTHORITY: This investigation is instituted pursuant to section 337 of the Tariff Act of 1930 (19 U.S.C. 1337), 19 U.S.C. 1337a, and paragraph 3 of the Commission order issued on June 29, 1979, in connection with Investigation No. 337–TA–54, Certain Multicellular Plastic Film (USITC Pub. 987, June 1979).

SUPPLEMENTAL INFORMATION: At the conclusion of investigation No. 337–TA–54, the Commission, on June 29, 1979, ordered exclusion of multicellular film manufactured abroad in accordance with the process disclosed by claims 1 and 2 of U.S. Letters Patent 3,416,984 owned by Sealed Air Corp. of Saddle Brook, N.J. Paragraph 3 of the Commission's order provided that persons desiring to import multicellular plastic film into the United States could petition the Commission to institute such further proceedings as would be appropriate in order to determine whether the multicellular plastic film sought to be imported should be allowed entry into the United States.

On October 14, 1980, a petition was filed with the Commission on behalf of Huang Well Industrial Co. Ltd., of Taipei, Taiwan, requesting the Commission to institute further proceedings for the purpose of determining whether the process used by that firm to manufacture multicellular plastic film abroad would, if practiced in the United States, infringe claims 1 or 2 of Sealed Air Corp.'s '984 patent.

Having considered the petition before it, the Commission on October 29, 1980, instituted an investigation to determine whether the process used to manufacture multicellular plastic film abroad by Huang Well Industrial Co. Ltd. would, if practiced in the United States, infringe claims 1 or 2 or U.S. Letters Patent 3,416,984.

PARTIES

For the purpose of the Commission's investigation, the following are named parties upon which this notice of investigation shall be served:

(1) The petitioner is Huang Well Industrial Co. Ltd., 3 Lane 131, sec. 1 Hang Chow S. Road, Taipei, Taiwan.

(2) Sealed Air Corp., Park 80 Plaza East, Saddle Brook, N.J. 07662, owner of U.S. Letters Patent 3,416,984 and complainant in the Commission's earlier investigation, is named an interested party upon which the petition and the affidavits attached thereto are to be served.

(3) A Commission investigative attorney shall be appointed by Mr. Talbot S. Lindstrom, Chief, Unfair Import Investigations Division, U.S. International Trade Commission.

PRESIDING OFFICER AND RECOMMENDED DETERMINATION

Donald K. Duvall, Chief Administrative Law Judge, U.S. International Trade Commission, shall designate a presiding officer who is directed to issue a recommended determination as soon as feasible, but no later than January 30, 1981. The recommended determination shall be limited to the question of whether the process employed by Huang Well Industrial Co. Ltd. to manufacture multicellular plastic film abroad would, if practiced in the United States, infringe claims 1 or 2 of Sealed Air Corp.'s '984 patent. The burden of proof shall be upon petitioner to show that its process would not, if practiced in the United States, infringe the patent in question.

INVESTIGATION TO BE EXPEDITED

The Commission intends that this investigation be expedited. The Commission plans to issue a final determination in this matter by the close of business on February 27, 1981.

PETITION AVAILABLE FOR PUBLIC INSPECTION

The petition filed on behalf of Huang Well Industrial Co. Ltd. and the two affidavits filed in support thereof are available for inspection by interested persons during official hours (8:45 a.m. to 5:15 p.m.) at the Office of the Secretary, U.S. International Trade Commission, 701 E Street NW., Washington, D.C. 20436.

FOR FURTHER INFORMATION CONTACT: Christine Bliss, Office of the General Counsel, U.S. International Trade Commission; 202-523-0375.

By order of the Commission.

Issued: October 30, 1980.

KENNETH R. MASON,
Secretary.

Index

U.S. Customs Service

Treasury decisions:
Drawback synopses:

	T.D. No.
Coconut oil, acid	80-265-A
Coffee machines	80-265-B
Chlordiazepoxide hydrochloride	80-265-C
Ethyl parathion	80-265-D
Generators	80-265-E
Piece goods, cut lace	80-265-F
Piece goods, dyed lace	80-265-G
Ferrochrome, crushed and sized	80-265-H
Galvanized steel, thermo-enamelled	80-265-I
Medical kits	80-265-J
Semiconductor devices, finished	80-265-K
Grape juice, bottled	80-265-L
LPG tanks	80-265-M
Refrigeration compressor units and systems	80-265-N
Watches with bands or straps, completed	80-265-O
Sewing machines and subassemblies	80-265-P
Tobacco, black fat	80-265-Q
Norminest tablets	80-265-R
MCP/DMA amine formulation	80-265-S
Ferrochrome, crushed and sized	80-265-T
Engines, marine	80-265-U
Wool or hair	80-265-V
Faba beans	80-265-W
Turbine rotors, steam	80-265-X
Turbine rotors, steam	80-265-Y
Pressure vessels	80-265-Z
Carriers' bonds	80-266
General drawback	80-267
Di Jub Leasing Corp. revocation of customhouse cartman's license No. 168	80-268
Recordation of trade name—R.B.K. Importers, Inc	80-269
Recordation of trade name—Donnkenny, Inc	80-270

Court of Customs and Patent Appeals

	C.A.D. No.
Westway Trading Corporation v. The United States	1254

Customs Court

Access to confidential documents; documents, confidential, C.R.D. 80–18
Access to documents, motion for; intervenor, C.R.D. 80–18
Administrative injury determination; Canadian sugar dumping investigation, C.R.D. 80–18
Appeal to United States Court of Customs and Patent Appeals (p.—); Appeal 81–3—Cucumbers in brine; packing costs; export value
Canadian sugar dumping investigation; administrative injury determination, C.R.D. 80–18
Confidential documents, access to; memorandum opinion and order, C.R.D. 80–18
Construction; U.S. Code, title 19, sec. 1561a(a)(2), C.R.D. 80–18
Documents, confidential; access to confidential documents, C.R.D. 80–18
International Trade Commission determination; sugar importations from Canada, C.R.D. 80–18
Intervenor; access to documents, motion for, C.R.D. 80–18
Memorandum opinion and order; confidential documents, access to, C.R.D. 80–18
Motion for access to documents, C.R.D. 80–18
Sugar importations from Canada; International Trade Commission determination, C.R.D. 80–18

DEC 1 1980 331-470 Item 950-D T 1.11/3:14/48
Copies 378 contin

Customs Bulletin

Regulations, Rulings, Decisions, and Notices concerning Customs and related matters

and Decisions

of the United States Court of Customs and Patent Appeals and the United States Customs Court

9247

Vol. 14 NOVEMBER 29, 1980 No. 48

This issue contains

T.D. 80–271 through 80–275
ERRATUM
General Notice
C.A.D. 1255
C.D. 4748
Protest abstracts P80/158 through P80/175
Reap. abstracts R80/303 through R80/340
International Trade Commission Notices

THE DEPARTMENT OF THE TREASURY
U.S. Customs Service

NOTICE

The abstracts, rulings, and notices which are issued weekly by the U.S. Customs Service are subject to correction for typographical or other printing errors. Users may notify the U.S. Customs Service, Logistics Management Division, Washington, D.C. 20229, of any such errors in order that corrections may be made before the bound volumes are published.

For sale by the Superintendent of Documents, U.S. Government Printing Office, Washington, D.C. 20402. Price: $2.25 (single copy domestic); $2.85 (single copy foreign). Subscription price: $85.00 a year domestic; $106.25 a year foreign.

U.S. Customs Service

Treasury Decisions

(T.D. 80–271)

Public Law 96–39—Customs Regulations Amended

Conforming amendments required by the Trade Agreements Act of 1979

TITLE 19—CUSTOMS DUTIES

CHAPTER I—U.S. CUSTOMS SERVICE

AGENCY: U.S. Customs Service, Department of the Treasury.

ACTION: Final rule.

SUMMARY: The Trade Agreements Act of 1979 made numerous changes to various provisions of law presently administered in whole or in part by the Customs Service.

This document amends various parts of the Customs Regulations to reflect and implement those provisions of the act relating to dumping and countervailing duties, the generalized system of preferences accorded to articles imported from designated beneficiary developing countries, the collection of duties and taxes on imported distilled spirits, protests, and petitions by American manufacturers, producers, and wholesalers against decisions of district directors of Customs.

EFFECTIVE DATE: The amendments are effective on the date of publication in the Federal Register.

FOR FURTHER INFORMATION CONTACT: Marcia Kaplan, Entry Procedures and Penalties Division, 202–566–5778 (secs. 10.171 (a) and (b), and 10.176 (a), (b), and (c); John Holl, Office of Inspection, 202–566–5354 (secs. 19.15(g) (1) and (2), 144.15(b), and 159.4); John E. Elkins, Regulations and Research Division, 202–566–8237 (pts. 113, 153, and 159, relating to countervailing and antidumping duties); James Hill, Classification and Value Division,

202-566-5786 (pts. 174, 175, and 177); Headquarters, U.S. Customs Service, 1301 Constitution Avenue NW., Washington, D.C. 20229.

SUPPLEMENTARY INFORMATION:

BACKGROUND

The Trade Agreements Act of 1979, Public Law 96-39, 93 Stat. 144 (the Act), approves and implements the trade agreements negotiated by the United States in the Tokyo Round of Multilateral Trade Negotiations (the MTN). The act consists of 11 separate titles relating to the following areas:

Title I, Countervailing and Antidumping Duties;
Title II, Customs Valuation;
Title III, Government Procurement;
Title IV, Technical Barriers to Trade (Product Standards);
Title V, Implementation of Certain Tariff Negotiations;
Title VI, Civil Aircraft Agreement;
Title VII, Certain Agricultural Measures;
Title VIII, Treatment of Distilled Spirits;
Title IX, Enforcement of U.S. Rights;
Title X, Judicial Review; and
Title XI, Miscellaneous Provisions.

The provisions of Title I, Countervailing and Antidumping Duties, were the subject of documents prepared by the Department of Commerce. Title II, Customs Valuation, was the subject of a notice of proposed amendments published in the Federal Register on March 31, 1980 (45 F.R. 20912). Customs is presently consulting with various agencies regarding regulations to implement that portion of Title III, Government Procurement, involving Customs. Consultations are also underway with the Department of Agriculture regarding regulations to implement section 506, Title V, Implementation of Certain Tariff Negotiations, relating to certain fresh, chilled, or frozen beef. Regulations implementing these titles as they relate to Customs will be the subject of a separate document. Title VI, Civil Aircraft Agreement, was the subject of a notice of proposed amendments published in the Federal Register on January 8, 1980 (45 F.R. 1633). There is no need to amend the Customs Regulations as a result of the changes made by Title IV, Technical Barriers to Trade (Product Standards); Title VII, Certain Agricultural Measures; and Title IX, Enforcement of U.S. Rights. Accordingly, this document relates only to amendments to the Customs Regulations as a result of the provisions of Title I, Countervailing and Antidumping Duties; Title VIII, Treatment of Distilled Spirits; Title X, Judicial Review; and Title XI, Miscellaneous Provisions. These titles and changes to the Customs Regulations are discussed below.

TITLE I—COUNTERVAILING AND ANTIDUMPING DUTIES

Title I repealed the Antidumping Act, 1921 (19 U.S.C. 160 et seq.), and significantly amended section 303, Tariff Act of 1930 (19 U.S.C. 1303), relating to the assessment of countervailing duties.

Subsequent to the foregoing legislative action, Reorganization Plan No. 3 of 1979 (44 F.R. 69273, Dec. 3, 1979), transferred responsibility for the administration of the antidumping and countervailing duty laws from the Secretary and General Counsel of the Department of the Treasury, and from the Department itself, to the Secretary of Commerce. The transfer of functions was made effective on January 2, 1980, by Executive Order 12188 (45 F.R. 989). Notice of the transfer was published as T.D. 80-133 in the Federal Register on May 28, 1980 (45 F.R. 35803).

The International Trade Administration, Department of Commerce, published new countervailing and antidumping duty regulations in the Federal Register on January 22, 1980, and February 6, 1980, respectively (45 F.R. 4932, 8182), to implement the statutory changes made by the act. The antidumping regulations are contained in part 353 of new chapter III, title 19, Code of Federal Regulations (19 CFR ch. III). Countervailing duty regulations appear as part 355 of chapter III.

Because of the statutory changes and transfer of functions described above, parts 113, 153, 159, and 177, chapter I, title 19, Code of Federal Regulations (19 CFR ch. I, pts. 113, 153, 159, and 177), are being amended as follows:

1. Section 113.14(q), Antidumping Bond, Customs Form 7591 is being deleted;
2. Part 153, Antidumping, is being deleted;
3. Section 159.41, Antidumping duties, is being amended to refer to the new Department of Commerce regulations;
4. Section 159.47, Conutervailing duties, is being amended to refer to the new Department of Commerce regulations;
5. A new section 159.58, pertaining to the suspension of liquidation in antidumping and countervailing duty cases, is being added; and
6. Section 177.0, Administrative rulings, is being amended to delete the references to parts 153 and 159.

TITLE VIII—TREATMENT OF DISTILLED SPIRITS

Title VIII, as it relates to Customs, eliminates the current wine-gallon method of taxing and levying duties on foreign distilled spirits. The taxes and duties are to be assessed under the proof gallon method

based both upon the volume of spirits and its alcoholic content (i.e., a lower tax on 86 proof than on 100 proof given the same volume).

This title also increases the duty on distilled spirits of countries not providing adequate reciprocal concessions to the United States and permits reductions in import duties on distilled spirits from countries providing reciprocal concessions. In the latter case, if the President finds that trading partners are not implementing their concessions, duties would subsequently be increased to the level of protection prevailing under the tax and duty system in effect on January 1, 1979.

Finally, title VIII establishes an all-in-bond administrative system for collecting excise taxes on domestic distilled spirits and imported bulk distilled spirits bottled domestically. It also defers for an additional 15 days, phased in over 3 years, the period for collection of the excise taxes from domestic producers, and authorizes the transfer of certain distilled spirits for exportation to any Customs bonded warehouse and not just a warehouse at an exterior port as provided by section 311, Tariff Act of 1930, as amended (19 U.S.C. 1311).

Because section 5521, Internal Revenue Code, as amended (26 U.S.C. 5521), is repealed by section 807 of the act, sections 19.15(g)(2) and 144.15(b), Customs Regulations (19 CFR 19.15(g)(2), 144.15(b)), are being amended to eliminate the reference to 26 U.S.C. 5521. Section 19.15(g)(1) is being amended to eliminate the requirement that articles withdrawn for transportation and delivery to a bonded storage warehouse for the sole purpose of immediate export be destined for a warehouse at an exterior port. Sections 159.4 (a) and (b)(1), Customs Regulations (19 CFR 159.4 (a) and (b)(1)), are being amended to provide for the proof gallon method of taxing and levying duties on foreign distilled spirits.

TITLE X—JUDICIAL REVIEW

Title X revises section 516, Tariff Act of 1930, as amended (19 U.S.C. 1516), to provide increased opportunities for appeal of certain interlocutory and all final rulings by the Department of Commerce, or the U.S. International Trade Commission in antidumping and countervailing duty cases. The title amends the Tariff Act of 1930 by adding a new section 516A (19 U.S.C. 1516A), which provides specific judicial review procedures for countervailing duty and antidumping proceedings. Existing section 516 has been amended to delete those provisions dealing with antidumping and countervailing duty determinations, and includes procedures for a domestic interested party's contest of appraised value, classification, or the rate of duty of imported merchandise. The title also expands opportunities for judicial review of determinations by Customs of the appraised value, classi-

fication, or rate of duty of imported goods. Furthermore, title X provides for judicial review of Customs decisions regarding the certification of the country of origin of products covered by Title III, Government Procurement.

Sections 174.12 and 174.13, Customs Regulations (19 CFR 174.12, 174.13), are being amended to expand the list of those individuals who may file a protest against decisions of the District Director of Customs and the time for filing a protest and the content of the protest when a surety is involved.

Section 174.30, Customs Regulations (19 CFR 174.30), is being amended to require that the notice of denial of the protest include a statement of the reasons for denial and a statement informing the protesting party of the right to file a civil action contesting the denial.

The heading to part 175 and sections 175.0, 175.2(a), 175.11(b), 175.12(a), 175.21(a), 175.21(b), and 177.0, Customs Regulations (19 CFR pts. 175, 175.0, 175.2(a), 175.11(b), 175.12(a), 175.21(a), 175.21(b), 177.0), are being amended to substitute domestic interested party for American manufacturer, producer, or wholesaler. Domestic interested party is being defined in section 175.3. Sections 175.1 and 175.2, Customs Regulations (19 CFR 175.1, 175.2), are being amended to include a request for appraised value determination with the listing of areas for which a petition may be filed. A new section 175.31 is being added to require publication of a notice of a decision of the Customs Court or Court of Customs and Patent Appeals which sustains in whole or in part a cause of action before either court.

TITLE XI—MISCELLANEOUS PROVISIONS

The only aspects of title XI affecting the Customs Regulations are those relating to the Generalized System of Preferences (GSP). Title XI amends GSP as follows:

(1) The President is permitted to continue GSP treatment for eligible articles, and to designate new eligible articles, from beneficiary developing countries which exceed the competitive need limitation, i.e., no more than 50 percent of total annual U.S. imports of an article eligible for GSP may come from one country, if total imports of the article are less than $1 million (adjusted annually to reflect changes in the gross national product).

(2) The customs union rule which permits such entities to be considered a single country for GSP, has been changed to:

(a) Permit associations of countries contributing to comprehensive regional economic integration among their members to be designated as a single beneficiary developing country;

(b) Permit application of the competitive need ceilings on GSP treatment (total annual imports of an eligible article from any one country may not exceed (1) about $41.9 million, or (2) 50 percent of total U.S. imports of the article) for a specific article from an association of countries described above to the individual member countries of such an association rather than to the association as a whole; and

(c) Reduce the minimum value-added requirement for GSP articles from such an association from 50 percent to 35 percent, the requirement applicable to individual countries.

(3) The exclusion of members of the Organization of Petroleum Exporting Countries (OPEC) from GSP would be modified to allow extension of GSP treatment to eligible articles from OPEC otherwise qualifying as beneficiary developing countries if they:

(a) Conclude bilateral product-specific trade agreements with the United States in the MTN, and

(b) Continue to supply petroleum to the United States.

Other than technical amendments to sections 10.171 (a) and (b) and 10.176(c), Customs Regulations (19 CFR 10.171 (a) and (b), 10.176(c)), to modify the citation to the Trade Act of 1974 and to reserve section 10.176(b) Customs Regulations (19 CFR 10.176(b)), the only substantive change being made is an amendment to section 10.176 relating to country-of-origin criteria to incorporate the expanded coverage pertaining to associations of countries contributing to comprehensive regional economic integration among their members.

INAPPLICABILITY OF PUBLIC NOTICE REQUIREMENT AND DELAYED EFFECTIVE DATE

Because these amendments implement a statutory requirement, confer additional rights and benefits upon the importing community, and conform the regulations to changes made by the act, notice and public procedure pursuant to 5 U.S.C. 553(b)(B), are unnecessary and contrary to the public interest. Further, for the same reasons, good cause exists for dispensing with the delayed effective date provisions of 5 U.S.C. 553(d)(3).

COMMENTS

For the reasons set forth in the previous paragraph, these amendments are being published as a final rule. However, recognizing the need to assess the effects of these amendments, Customs will evaluate their impact as soon as sufficient experience has been acquired, with

a view to making appropriate revisions. To assist in the evaluation, written comments are invited on their impact. Consideration will be given to any comments to determine whether it would be appropriate to make further amendments. Comments should be addressed to the Commissioner of Customs, attention: Regulations and Research Division, room 2426, U.S. Customs Service, 1301 Constitution Avenue NW., Washington, D.C. 20229. Comments submitted will be available for public inspection in accordance with section 103.8(b), Customs Regulations (19 CFR 103.8(b)), during regular business hours, at the Regulations and Research Division.

DRAFTING INFORMATION

The principal author of this document was John E. Elkins, Regulations and Research Division, Office of Regulations and Rulings, U.S. Customs Service. However, personnel from other Customs offices participated in its development.

AMENDMENTS TO THE REGULATIONS

Parts 10, 19, 113, 144, 153, 159, 174, 175, and 177, Customs Regulations (19 CFR pts. 10, 19, 113, 144, 153, 159, 174, 175, 177), are amended as set forth below.

R. E. CHASEN,
Commissioner of Customs.

Approved: October 7, 1980.
RICHARD J. DAVIS,
Assistant Secretary of the Treasury.

PART 10—ARTICLES CONDITIONALLY FREE, SUBJECT TO A REDUCED RATE, ETC.

1. Section 10.171(a) is amended by adding, "as amended" after "the Trade Act of 1974" wherever it appears.

2. Section 10.171(b) is amended by adding "or which is contributing to comprehensive regional economic integration among its members through appropriate means, including, but not limited to, the reduction of duties" after "customs union" in the second sentence.

3. Section 10.176 is amended in the following manner: Paragraph (a) is amended to read as follows:

10.176 Country-of-origin criteria.

(a) *Merchandise produced in a beneficiary developing country or any two or more countries which are members of the same association of countries.*—Merchandise which is (1) the growth, product, manufacture, or assembly of (i) a beneficiary developing

country or (ii) any two or more countries which are members of the same association of countries and (2) imported directly from such beneficiary developing country or member countries, may qualify for duty-free entry under the Generalized System of Preferences (GSP). However, duty-free entry under GSP may be accorded only if (1) the sum of the cost or value of the materials produced in the beneficiary developing country or any two or more countries which are members of the same association of countries which is treated as one country under section 502(a)(3), Trade Act of 1974, as amended (19 U.S.C. 2462(a)(3)), plus (2) the direct costs of processing operations performed in such beneficiary developing country or member countries, is not less than 35 percent of the appraised value of the article at the time of its entry into the customs territory of the United States.

Paragraph (b) is deleted and the paragraph marked "Reserved".

Paragraph (c) is amended by adding ", as amended" after "the Trade Act of 1974".

(R.S. 251, as amended sec. 624, 46 Stat. 759 (19 U.S.C. 66, 1624))

PART 19—CUSTOMS WAREHOUSES, CONTAINER STATIONS, AND CONTROL OF MERCHANDISE THEREIN

1. Section 19.15(g)(1) is amended by adding the phrase ", except for distilled spirits which may be withdrawn under the provisions of section 311 for transportation and delivery to any bonded storage warehouse for the sole purpose of immediate export," after the phrase "for the sole purpose of immediate export" in the first sentence and by deleting the phrase "at the exterior port" in the third and fourth sentences.

2. Section 19.15(g)(2) is amended by deleting the phrase "section 5521 of the Internal Revenue Code, as amended (26 U.S.C. 5521), and" in the first sentence.

(R.S. 251, as amended, sec. 624. 46 Stat. 759 (19 U.S.C. 66, 1624))

PART 113—CUSTOMS BONDS

Section 113.14 is amended by deleting paragraph (q) and marking the paragraph "Reserved".

PART 144—WAREHOUSE AND REWAREHOUSE ENTRIES AND WITHDRAWALS

1. The heading to section 144.15(b) is amended by substituting "311, Tariff Act of 1930, as amended" for "5521 of the Internal Revenue Code".

2. Section 144.15(b)(1) is amended by deleting the phrase "section 5521 of the Internal Revenue Code, as amended (26 U.S.C. 5521), and".

(R.S. 251, as amended, sec. 624, 46 Stat. 759 (19 U.S.C. 66, 1624))

PART 153—ANTIDUMPING

Chapter I of title 19, Code of Federal Regulations, is amended by deleting part 153.

(R.S. 251, as amended, sec. 624, 46 Stat. 759 (19 U.S.C. 66, 1624))

PART 159—LIQUIDATION OF DUTIES

I. Section 159.4(a) is amended by substituting the phrase "distilled spirits" for "alcoholic beverages", by deleting the parenthetical phrase "(or wine gallons if below proof)" in the first sentence and by adding a new sentence at the end of the section to read as follows:

159.4 Alcoholic beverages.

(a) *Quantities subject to duties.* * * * Customs duties and internal revenue taxes on alcoholic beverages other than items 167.20 and 167.90, Tariff Schedules of the United States (19 U.S.C. 1202), and distilled spirits provided for in schedule 1, part 12, Tariff Schedules of the United States, shall be collected only on the number of wine gallons and fractional parts thereof, entered or withdrawn for consumption.

2. Section 159.4(b)(1) is amended by adding the phrase "utilizing the proof gallon method of computation" at the end of the section.

3. Section 159.41 is amended to read as follows:

159.41 Antidumping duties.

Antidumping duties shall be assessed in accordance with part 353, chapter III, of this title.

4. Section 159.47 is amended to read as follows:

159.47 Countervailing duties.

Countervailing duties shall be assessed in accordance with part 355, chapter III, of this title.

5. A new section 159.58 is added to read as follows:

159.68 Dumping and countervailing duties; Action by district director.

(a) *Antidumping matters.*—Upon receipt of notification from the Commissioner, each district director shall suspend liquidation on merchandise entered, or withdrawn from warehouse, for consumption, on or after the date of publication of the "Notice of Preliminary Affirmative Antidumping Determination," "Notice of Final Affirmative Antidumping Determination" or "Notice

of Violation of Agreement" as provided by part 353, chapter III, of this title. Each district director shall immediately notify the importer, consignee, or agent of each entry of merchandise in question with respect to which liquidation is suspended. The notice shall indicate the relevant ascertained and determined or estimated antidumping duty.

(b) *Countervailing matters.*—Upon receipt of notification from the Commissioner, each district director shall suspend liquidation on merchandise entered, or withdrawn from warehouse, for consumption, on or after the date of publication of the "Notice of Preliminary Affirmative Countervailing Duty Determination," "Notice of Final Affirmative Countervailing Duty Determination" or "Notice of Violation of Agreement," as provided by part 355, chapter III, of this title. Each district director shall immediately notify the importer, consignee, or agent of each entry of merchandise in question with respect to which liquidation is suspended. The notice shall indicate the relevant ascertained and determined or estimated countervailing duty.

(R.S. 251, as amended, sec. 624, 46 Stat. 759 (19 U.S.C. 66, 1624))

PART 174—PROTESTS

1. Section 174.12(a) is amended to read as follows:

174.12 Filing of protests.

(a) *By whom filed.*—Protests may be filed by:

(1) the importer or consignee shown on the entry papers, or their sureties;

(2) any person paying any charge or exaction;

(3) any person seeking entry or delivery;

(4) any person filing a claim for drawback; or

(5) any authorized agent of any of the persons described in paragraphs (1) through (4), subject to the provisions of section 174.3.

2. Section 174.12(e) is amended by deleting the word "or" at the end of paragraph (1), by substituting a semicolon for the period at the end of paragraph (2) followed by the word "or" and by adding a new paragraph (3) to read as follows:

174.12 Filing of protests.

* * * * * * *

(e) *Time of filing.*

* * * * * * *

(3) The date of mailing of notice of demand for payment against a bond in the case of a surety which has an unsatisfied legal claim under a bond written by the surety.

3. Section 174.13(a) is amended by deleting the word "and" after the semicolon in paragraph (6), by substituting a semicolon for the period at the end of paragraph (7) followed by the word "and" and by adding a new paragraph (8) to read as follows:

174.13 Contents of protest.

(a) *Contents, in general.*

* * * * * * *

(8) If another party has not filed a timely protest, the surety's protest shall certify that the protest is not being filed collusively to extend another authorized person's time to protest.

4. Section 174.30(a) is amended by adding the following sentence between the first and second sentences:

174.30 Notice of denial of protest.

(a) *Issuance of notice.* * * * The notice shall include a statement of the reasons for the denial, as well as a statement informing the protesting party of the right to file a civil action contesting the denial of the protest under section 514, Tariff Act of 1930, as amended (19 U.S.C. 1514).

(R.S. 251, as amended, sec. 624, 46 Stat. 759 (19 U.S.C. 66, 1624))

PART 175—PETITIONS BY AMERICAN MANUFACTURERS, PRODUCER,- AND WHOLESALERS

1. The heading to part 175 is amended to read as follows:

PART 175—PETITIONS BY DOMESTIC INTERESTED PARTIES

2. Section 175.0 is amended by substituting "domestic interested parties" for "American manufacturers, producers, and wholesalers".

3. The heading to subpart A of part 175 is amended to read as follows:

Subpart A—Request for classification, appraised value and rate of duty

4. Section 175.1 is amended by adding ", appraised value" after "classification".

5. Sections 175.2(a), 175.12(a), 175.21(a), and 175.21(b) are amended by substituting the phrase "a domestic interested party" for "an American manufacturer, producer, or wholesaler" wherever it appears.

6. Section 175.2(b) is amended by adding ", appraised value" after "classification".

7. A new section 175.3 is added to read as follows:

175.3 Domestic interested party.

Domestic interested party, when used in this Part, means:

(a) A manufacturer, producer, or wholesaler in the United States of a like product;

(b) A certified union or recognized union or group of workers which is representative of an industry engaged in the manufacture, production, or wholesale in the United States of a like product; or

(c) A trade or business association a majority of whose members manufacture, produce, or wholesale a like product in the United States.

8. Section 175.11(b) is amended by substituting "domestic interested parties" for "American manufacturers, producers, or wholesalers."

9. A new subpart D is added to part 175 to read as follows:

Subpart D—Procedure following court decision

175.31 Publication of notice of court decision.

Notice of a decision of the Customs Court or of the Court of Customs and Patent Appeals which sustains, in whole or in part, a cause of action before the court under the provisions of section 516, Tariff Act of 1930, as amended (19 U.S.C. 1516), shall be published by the Commissioner of Customs in the Federal Register within 10 days from the date of issuance of the court decision.

(R.S. 215, as amended, sec. 624, 46 Stat. 759 (19 U.S.C. 66, 1624))

PART 177—ADMINISTRATIVE RULINGS

The fourth sentence of section 177.0 is amended by (1) deleting "Part 153 (relating to enforcement of the Antidumping Act, 1921, as amended), Part 159 (insofar as it relates to countervailing duties)," and (2) substituting "Part 175 (relating to petitions filed by domestic interested parties pursuant to sec. 516, Tariff Act of 1930, as amended)" for "Part 175 (relating to petitions filed by American manufacturers, producers, or wholesalers pursuant to sec. 516 of the Tariff Act of 1930, as amended)".

(R.S. 251, as amended, sec. 624, 46 Stat. 759 (19 U.S.C. 66, 1624))

(T.D. 80-272)

Approval and discontinuance of consolidated aircraft bonds (air carrier blanket bonds), Customs form 7605

The following consolidated aircraft bonds have been approved or discontinued as shown below. The symbol "D" indicates that the bond previously outstanding has been discontinued on the month, day, and year represented by the figures which follow. "PB" refers to a previous bond, dated as represented by the figures in parentheses immediately following, which has been discontinued. If the previous bond was in the name of a different company or if the surety was different, the information is shown in a footnote at the end of the list.

Dated: November 7, 1980.

Name of principal and surety	Date term commences	Date of approval	Filed with district director/area director; amount
Pan American World Airways, Inc. (A NY Corp.), Pan American Bldg., New York, NY; The Travelers Indemnity Co. (PB 7/17/75) D 9/19/80[1]	July 17, 1980	Sept. 19, 1980	New York, NY $300,000
Republic Airlines West, Inc., 7500 Airline Dr., Minneapolis, MN; Safeco Ins. Co. of America (PB 7/1/79) D 9/30/80[2]	Oct. 1, 1980	Oct. 1, 1980	Minneapolis, MN $100,000
Singapore Airlines Ltd., San Francisco Int'l Airport, San Francisco, CA; The Continental Ins. Co.	June 15, 1980	Aug. 28, 1980	San Francisco, CA $100,000

[1] Principal is Pan American World Airways, Inc. (A New York corporation) and its w/o/s Pantique, Inc. (A Delaware corporation)

[2] Principal is Republic Airlines Inc.

Note.—The foregoing principals have been designated as carriers of bonded merchandise.

BON-3-01

MARILYN G. MORRISON,
Director,
Carriers, Drawback and Bonds Division.

(T.D. 80-273)

[Bond]

Approval of a carrier's bond, Customs form 3587

A bond of a carrier for the transportation of bonded merchandise has been approved as shown below. The approval of the bond is temporary until December 30, 1980.

Dated: November 10, 1980.

Name of principal and surety	Date of bond	Date of approval	Filed with district director/area director/amount
Equipment Supplies, Inc., P.O. Box 396, Argo, Ill.; motor carrier; Hartford Accident & Indemnity Co.	Sept. 30, 1980	Oct. 7, 1980	Chicago, Ill. $35,000

BON—3—03

MARILYN G. MORRISON,
Director,
Carriers, Drawback and Bonds Division.

(T.D. 80-274)

Foreign Currencies—Daily Rates for Countries Not on Quarterly List

Rates of exchange based on rates certified to the Secretary of the Treasury by the Federal Reserve Bank of New York for the Brazil cruzeiro, People's Republic of China yuan, Hong Kong dollar, Iran rial, Philippines peso, Singapore dollar, Thailand baht (tical), and Venezuela bolivar

The Federal Reserve Bank of New York, pursuant to section 522(c), Tariff Act of 1930, as amended (31 U.S.C. 372(c)), has certified buying rates for the dates and foreign currencies shown below. The rates of exchange, based on these buying rates, are published for the information and use of Customs officers and others concerned pursuant to part 159, subpart C, Customs Regulations (19 CFR 159, subpart C).

Brazil cruzeiro:	
October 27–31, 1980	$0.0167
People's Republic of China yuan:	
October 27, 1980	$0.671366
October 28–31, 1980	.666045
Hong Kong dollar:	
October 27, 1980	$0.197316
October 28, 1980	.197219
October 29, 1980	.197394
October 30, 1980	.197550
October 31, 1980	.197511
Iran rial:	
October 27–31, 1980	Not available

Philippines peso:
October 27–31, 1980 ..... $0.1338
Singapore dollar:
October 27, 1980 ..... $0.479042
October 28, 1980 ..... .478354
October 29, 1980 ..... .479386
October 30, 1980 ..... .479731
October 31, 1980 ..... .479157
Thailand baht (tical):
October 27–31, 1980 ..... $0.0488
Venezuela bolivar:
October 27–31, 1980 ..... $0.2328

(LIQ-3-01 O:C:E)

Dated: October 31, 1980.

NANCY I. BROWN,
Chief,
Customs Information Exchange.

(T.D. 80–275)

Foreign Currencies—Variances from Quarterly Rate

The following rates of exchange are based upon rates certified to the Secretary of the Treasury by the Federal Reserve Bank of New York, pursuant to section 522(c), Tariff Act of 1930, as amended (31 U.S.C. 372(c)), and reflect variances of 5 per centum or more from the quarterly rate published in T.D. 80–249 for the following countries. Therefore, as to entries covering merchandise exported on the dates listed, whenever it is necessary for Customs purposes to convert such currency into currency of the United States, conversion shall be at the following rates:

Sri Lanka rupee:
October 27–31, 1980 ..... $0.058140
Austria schilling:
October 31, 1980 ..... $0.074047
German deutsche mark:
October 31, 1980 ..... $0.524714
Ireland pound:
October 31, 1980 ..... $1.9650

(LIQ-3-01 O:C:E)

Dated October 31, 1980.

NANCY I. BROWN,
Chief,
Customs Information Exchange.

331-470 O - 80 - 2

ERRATUM

In CUSTOMS BULLETIN volume 14, No. 45, dated November 5, 1980, in T.D. 80–256 the following rate was mistakenly omitted:

Sri Lanka rupee:

October 10, 1980 ..... $0. 058480

U.S. Customs Service

General Notice

(TMK-2-RRUEE)

Notice of application for recordation of trade name American Machine & Tool Co., Inc.

Application has been filed pursuant to section 133.12, Customs Regulations (19 CFR 133.12), for the recordation under section 42 of the act of July 5, 1946, as amended (15 U.S.C. 1124), of the trade name American Machine & Tool Co., Inc., a corporation organized under the laws of the State of Pennsylvania, located at Fourth Avenue and Spring Street, Royersford, Pa. 19468.

The application states that the trade name is used in connection with power tools, manufactured in the United States. The application states further that no foreign firm is authorized to use the trade name sought to be recorded. Appropriate accompanying papers were submitted with the application.

Before final action is taken on the application, consideration will be given to any relevant data, views, or arguments submitted in writing by any person, in opposition to the recordation of this trade name. Any such submission should be addressed to the Commissioner of Customs, Washington, D.C. 20229, in time to be received not later than 30 days from the date of publication of this notice in the Federal Register.

Notice of the action taken on the application for recordation of the trade name will be published in the Federal Register.

Dated: November 6, 1980.

DONALD W. LEWIS,
Director,
Office of Regulations and Rulings.

Decisions of the United States Court of Customs and Patent Appeals

(C.A.D. 1255)

No. 80-27 NORMAN G. JENSEN, INC., A/C CALHOUN COLLECTOR'S INC. *v.* UNITED STATES,

1. CLASSIFICATION—23 CARAT (K) GOLD STAMPS

Customs Court opinion is adopted. Judgment holding that embossed 23K gold stamps issued by private party are neither postage stamps nor essentially printed matter within the TSUS is *affirmed.*

U.S. Court of Customs and Patent Appeals, November 6, 1980

Appeal from U.S. Customs Court, C.D. 4846

[Affirmed.]

Joseph Donohue, Donohue and Donohue, attorney for appellant.

Alice Daniel, Assistant Attorney General, *David M. Cohen,* Director, *Joseph I. Liebman,* Attorney in Charge, Field Office for Customs Litigation, *Madeline B. Kuflik,* Commercial Litigation Branch, Civil Division, Department of Justice, attorneys for appellee.

[Oral argument on October 7, 1980 by *Joseph Donohue* for appellant and *Madeline B. Kuflik* for appellee.]

Before MARKEY, *Chief Judge,* RICH, BALDWIN, MILLER and NIES, *Associate Judges.*

RICH, Judge.

This appeal is from the judgment of the U.S. Customs Court in *Norman G. Jensen, Inc., a/c Calhoun's Collectors Society, Inc.* v. *United*

States, — Cust. Ct. —, C.D. 4846 (1980), sustaining the original classification of the imported merchandise, 23 carat (K) gold stamps. We affirm.

THE IMPORTED MERCHANDISE

The merchandise consists of so-called Staffa stamps imported from Scotland in 1975. They are made to somewhat resemble postage stamps and have adhesive backings, but differ from ordinary government-issue stamps in being made from thin, 1½-by-2 inch rectangles of 23K gold. Embossed on the stamp face is the State seal of one of the Original Thirteen American Colonies. The name of the selected colony is inscribed immediately below. At the top left-hand corner appear the words, Staffa Scotland. In opposite corners at the bottom are the phrases "23K Gold" and "Postage £6."

Staffa, Scotland, is a small, uninhabited, privately owned island about 8 nautical miles off the coast of Scotland. A ferry, operated by Staffa Marine Ltd., shuttles tourists to and fro. While on board, the tourists may buy Staffa stamps for 6 pounds sterling. A letter or card with the Staffa stamp affixed may be deposited in a private receptacle on the island designated for the collection of such letters or cards. Staffa Marine then collects the letters or cards daily and takes them to the mainland where a British postage stamp is then affixed to each letter or card prior to its being deposited in an official British Post Office for transmission to the designated destination.

STATUTORY PROVISIONS

The merchandise was classified by the Customs Service under item 656.10 of the Tariff Schedules of the United States (TSUS):

	Articles of precious metal, including rolled precious metal:	
* * *	Of platinum, including rolled platinum	* * *
656.10	Of gold, including rolled gold	20% ad val.
* * *	Of silver, including rolled silver	* * *

Appellant's principal claim was for classification as free under the following item:

270.40	Postage and revenue stamps, canceled or not canceled, and government-stamped envelopes and postal cards bearing no printing other than the official imprint thereon	Free

or alternatively either under item 274.70:

	Photographs, engravings, etchings, lithographs, and woodcuts, and pictorial matter produced by relief or stencil printing process, all the foregoing, whether bound or not bound, and not specially provided for:	
	Printed over 20 years at time of importation	* * *
	Printed not over 20 years at time of importation:	
*	* * * * * *	*
274.70	Other	4% ad val.

or item 274.90:

	Printed matter not specially provided for:	
* * *	Suitable for use in the production of such books as would themselves be free of duty	* * *
* * *	Other:	
*	* * * * * *	*
	Other:	
	Susceptible of authorship	* * *
274.90	Other	7.5% ad val.

CUSTOMS COURT

The Customs Court noted that both sides produced abundant testimony on the meaning of postage stamps. The common meaning was held to be determinative, not the philatelic one, since Congress did not evidence any specific meaning. The following two requirements for a postage stamp were gleaned from lexicographic sources: (1) issuance or specific authorization by a government; and (2) representation of a prepaid postal charge. Since Staffa stamps were issued by a private party and not authorized by the British Government, they were held not to be postage stamps under item 274.40.

As to the alternative claims under item 274.70 and item 274.90, the court held that the embossed stamps were printed material but not printed matter within part 5 of schedule 2, TSUS. While Staffa stamps were found to be printed, since embossing is a form of printing, the court noted that they must also consist essentially of pictorial or textual matter to fall within either item 274.70 or item 274.90.

Appellee was held to have failed to produce sufficient evidence to rebut Customs' determination. An advertising brochure, said to be the only relevant evidence, was declared to stress not only the value of the

goods as collectibles but their definite monetary value as well, because they are made of pure 23K gold instead of paper. Since the desirability of the stamps was held to be derived equally, if not principally, from the intrinsic worth of the gold, the court concluded that the essential character of the Staffa stamps was not imparted by the textual or pictorial matter on the stamps and, therefore, that the stamps were not printed matter.

OPINION

[1] We find no error in the Customs Court's decision. The law was properly applied to the facts. Therefore, we adopt the careful and detailed reasoning of the Customs Court's opinion as our own.

The judgment of the Customs Court is *affirmed*.

Decisions of the United States Customs Court

United States Customs Court

One Federal Plaza

New York, N.Y. 10007

Chief Judge

Edward D. Re

Judges

Paul P. Rao
Morgan Ford
Scovel Richardson
Frederick Landis
James L. Watson
Herbert N. Maletz
Bernard Newman
Nils A. Boe

Senior Judge

Samuel M. Rosenstein

Clerk

Joseph E. Lombardi

Customs Decision

(C.D. 4878)

J. E. MAMIYE & SONS, INC., PLAINTIFF, *v.* UNITED STATES, DEFENDANT

Tote bags

Court No. 78-6-01086

Importations of certain tote bags made of textile material were classified under item 389.60, TSUS (or as renumbered item 389.62 pursuant to Executive Order 11974), as modified by T.D. 68-9, held

properly subject to classification under item 706.24, TSUS, as modified by T.D. 68–9.

"Handbags," as provided for in item 706.24, TSUS, is an eo nomine provision. This provision prevails over the basket provision for articles n.s.p.f. of textile materials both as to specificity and by virtue of headnote 1 of schedule 3, part 7, subpart B which excludes articles of textiles provided for elsewhere.

Use may be considered in determining the identity of an eo nomine designation. *United States* v. *Quon Quon Company*, 46 CCPA 70, C.A.D. 699 (1959).

The record establishes the involved tote bags are used primarily by women as second handbags to carry items which do not ordinarily fit within a handbag. Such testimony is sufficient to establish the use of a tote bag to be similar to a handbag and as such removes it from the category of a shopping bag which would prevent classification under 706.24, supra. See Headnote 2(b) of schedule 7, part 1, subpart D.

[Judgment for plaintiff.]
(Decided October 31, 1980)

Mandel & Grunfeld (*Steven P. Florsheim* and *Robert B. Silverman* at the trial and on the briefs) for the plaintiff.

Alice Daniel, Assistant Attorney General; *Joseph I. Liebman*, Attorney in Charge, Field Office for Customs Litigation (*Jerry P. Wiskin* and *Madeline B. Kuflik* at the trial; *Jerry P. Wiskin* on the brief), for the defendant.

FORD, Judge: This action presents for determination the proper classification of certain tote bags which were classified for duty purposes under item 389.60 (or item 389.62)[1] of the Tariff Schedules of the United States, as modified by T.D. 68–9, and assessed with duty at 25 cents per pound plus 15 per centum ad valorem.

Plaintiff contends said tote bags are properly dutiable at 20 per centum ad valorem as either handbags or, alternatively, as luggage of textile materials as provided for under item 706.24, TSUS, as modified by T.D. 68–9.

The pertinent statutory provisions read as follows:

Tariff Schedules of the United States:

Schedule 3, part 7, subpart B:

Subpart B headnote:

1. This subpart covers articles, of textile materials, not covered elsewhere in the tariff schedules.

* * * * * * *

[1] Item 389.60, TSUS, was renumbered item 389.62 by Executive Order 11974, dated Feb. 25, 1977.

Articles not specially provided for, of textile materials:

* * * * * * *

Other articles, not ornamented:

* * * * * * *

Of man-made fibers:

* * * * * * *

389.60	Other	25¢ per lb.+15% ad val.

Schedule 7, part 1, subpart D:

Subpart D headnotes:

* * * * * * *

2. For the purposes of the tariff schedules—

(a) the term "luggage" covers—

(i) travel goods, such as trunks, hand trunks, lockers, valises, satchels, suitcases, wardrobe cases, overnight bags, pullman bags, gladstone bags, traveling bags, knapsacks, kitbags, haversacks, duffle bags, and like articles designed to contain clothing or other personal effects during travel; and

(ii) brief cases, portfolios, school bags, photographic equipment bags, golf bags, camera cases, binocular cases, gun cases, occupational luggage cases (physicians', sample, etc.) and like containers and cases designed to be carried with the person, except handbags as defined herein;

(b) the term "handbags" covers pocketbooks, purses, shoulder bags, clutch bags, and all similar articles, by whatever name known, customarily carried by women or girls, but not including luggage or flat goods as defined herein or shopping bags;

* * * * * * *

Luggage and handbags * * *:

* * * * * * *

Of textile materials (except yarns, of paper), whether or not ornamented:

* * * Wholly or in part of braid------- * * *

* * * * * * *

Other:

Of vegetable fibers and not of pile or tufted construction:

* * * * * * *

706.24 Other---------- 20% ad val.

The record consists of the testimony of 8 witnesses called on behalf of plaintiff and 10 called on behalf of defendant. Fifty-three exhibits were received in evidence, 27 for plaintiff and 26 for defendant.

Mr. Jack Mamiye, president of plaintiff corporation, testified that he had been importing and selling handbags for approximately 30 years.

The line of merchandise handled by plaintiff consists of shoulder bags, tote bags and evening bags, which cover approximately 2,500 to 3,000 styles of which there are 1,000 styles of tote bags.

The imported tote bags consist of many variations in sizes, colors, and materials. Some of the tote bags had open tops, while others had zippers or snap closures, and some had inside or outside pockets. Mr. Mamiye testified that the letter designations on the invoices of the representative exhibits 1 to 5, indicated the various business concerns for whom they were imported. For example, "LG" represents Literary Guild, and "DB" represents Doubleday Book Club, etc.

Merchandise, such as exhibits 1 to 5, was sold to various premium customers and other accounts without the graphics. The latter tote bag were sold to handbag departments of department stores, notion departments, and cosmetic departments. The imported merchandise is commonly referred to as handbags, tote bags, shoulder bags, and cosmetic bags, as well as fashion handbags, fashion totes, and shoulder totes.

The witness testified that a tote bag with or without a zipper closure is still a tote bag or a handbag. The absence or presence of a closure is due solely to the customer's desire. The witness testified exhibits 1 to 5 were premium items, and he could only guess that they were probably sold like a gift with a purchase, I guess. I don't know.

The second witness called on behalf of plaintiff was Lou Nathan, an instructor at the New York Fashion Institute of Technology, where he teaches courses in handbag design and pattern making. Mr. Nathan is also a consultant to the handbag industry, and his duties involve supervision of handbag design, consulting on manufacturing operations and quality control.

The witness has been in the handbag business since 1930, having owned and operated a number of handbag manufacturing companies, as well as being employed by various handbag manufacturers. Mr. Nathan has been involved in every facet of handbag design and manufacture and has personally designed and manufactured tote bags throughout his years in the handbag industry. He has written trade publication articles on the subject of handbags, as well as a textbook on handbag design and technology. He was familiar with the use of handbags in the United States and the manner in which handbags were sold at the retail level.

Mr. Nathan defined a handbag as something that women wear to carry their personal possessions while they are away from home. Based upon his experience, the witness testified that handbags fall into various price categories, such as, low, medium, or high. Handbags are also categorized by type, such as, frame bags, shoulder bags, underarm bags, clutch bags, box bags, evening bags, tote bags, travel bags, and hobo bags. In the opinion of the witness, a tote bag is a handbag utilized as an auxiliary handbag and is used to carry various objects which do not fit into a woman's regular handbag. It is, in effect, an auxiliary handbag. While a tote bag may be utilized for carrying purchases, such use is secondary because it is, in effect, a second handbag. By the same token, the witness testified that women may carry purchases in their regular handbag. In the opinion of Mr. Nathan tote bags are not sturdy versions of shopping bags and are not intended or designed to imitate shopping bags.

According to witness Nathan the concept of fashion plays an important role with respect to handbags, including tote bags. Fashion refers to color combinations, shape, and the manner in which the bag is carried, such as, hand, arm, or shoulder. From the standpoint of construction and use, exhibits 1 to 5 are similar to pocketbooks, purses, shoulder bags, and clutch bags.

On cross-examination, Mr. Nathan stated that women use handbags for carrying valuables and generally desire some form of security

device in their primary handbag. The witness defined a shopping bag as a large paper or plastic bag, given away in a retail store. Such bags are used for carrying bulky purchases and are not used by women as a secondary handbag.

Mr. Nathan testified that he attended trade shows and that tote bags are displayed by handbag manufacturers as part of their collection.

Next called on behalf of plaintiff was Mr. Sharif El Fouly, manufacturer and designer of handbags, operating under the name of Sharif's Design, Ltd. The witness also teaches courses in handbag design, construction and pattern making at the Parsons Fashion Center, which is connected with the New School in New York City. After his arrival in the United States, he was employed by a handbag manufacturer from 1972 to 1978. The duties of this well-informed witness included design, pattern making, quality control, buying of raw materials, as well as being in contact with retail buyers.

Prior to immigrating to the United States, the witness was involved in his family's handbag and luggage manufacturing business in Egypt. He obtained a degree in design from Offenbach in Germany and worked as a designer in the handbag industry in Europe. Witness El Fouly taught courses in handbag design in Lebanon, Jordan, and Morocco. He presently holds five foreign patents in handbag design. Mr. El Fouly regularly attends handbag trade shows and visits retail handbag establishments to observe how handbags are sold and merchandised. He has observed the uses of handbags throughout the United States since his arrival in this country in 1970. According to the witness, the use of a handbag does not vary geographically. Handbags are used mostly by women to carry their belongings, and it is not uncommon for women to carry two handbags at one time.

The witness has personally designed, manufactured, and sold tote bags, which come in all sizes, with and without closures. According to the witness some tote bags have inside or outside pockets and some do not. Such articles are made from various materials including leather, fabric, and plastic. Tote bags, in his opinion, are handbags and are usually sold and displayed in the handbag department of department stores. Larger tote bags are sold in the luggage department. Exhibits 1 to 5 are commonly referred to as tote bags and are not referred to as shopping bags. The tote bags, such as exhibits 1 to 5, are fashion bags because the colors, styles, designs, and proportions are geared to current fashions.

The witness was of the opinion that exhibits 1 to 5 are similar to pocketbooks, clutch bags, purses, and shoulder bags from the standpoint of construction and use.

On redirect examination witness El Fouly stated that tote bags can be used for shopping because they are usually large. However, the use

of a handbag for carrying purchases does not change the identity from a handbag to a shopping bag since most large handbags can be used for shopping.

Deborah Patterson was then called on behalf of plaintiff. She testified that she had used tote bags similar to exhibits 1 to 5 for approximately 5 or 6 years. Such bags were used to carry her belongings, such as keys, money, and a change of clothes. On occasion she carried a second handbag in addition to her tote bag. The witness obtained a tote bag identical to exhibit 8 with the purchase of cosmetics in Bloomingdales, where it was placed in a paper bag and stapled shut. The witness further stated the cosmetics were not placed in the tote bag.

Michael Dimin, a wholesaler and distributor of plain and printed polyethylene shopping bags, was called by plaintiff. He defined a shopping bag as * * * a bag whose primary function would be the transportation of goods from a point of sale to a point of use. Shopping bags are sold or given away by retailers and are used by both men and women. According to witness Dimin shopping bags fall under the category of packaging material, and, in his opinion, exhibits 1 to 5 are not shopping bags and are not competitive with his shopping bags.

Annemarie Androsiglio, a fashion coordinator for a women's wear manufacturer, was called on behalf of plaintiff and testified that she used a tote bag to carry her personal effects, such as, credit cards, keys wallet, newspaper, and a folded shopping bag. She stated that while she placed purchases in her tote bag along with her personal effects, she did not use a tote bag to carry purchases only. She also carried on occasion an additional handbag along with her tote bag. In her opinion, a shopping bag is one used to carry merchandise home from a store and, once it served this function, she considered it to be disposable item.

Rose Ann Avallone, called on behalf of plaintiff, testified that she had obtained exhibit 22 from the Doubleday Book Club. She stated that she used exhibit 22 while going to and from work, to carry personal effects such as an umbrella, a makeup case, hairbrush, a book or magazine, and sometimes her lunch. On occasion she has used exhibit 22 to carry a small purchase, but she has never used a tote bag for shopping or carrying only purchases. The witness further stated that she used a second handbag while going to and from work so she could carry all the personal effects that would not fit into one handbag. Witness Avallone stated that for leisure activities she used a different tote bag, in which she put all her personal effects, including keys, wallet, and money, and ordinarily did not carry another pocketbook on those occasions. According to the witness a shopping bag is primarily an inexpensive paper or plastic bag used to carry purchases home from a store.

Frieda Koren, an owner of a discount retail store in New York City, was called by plaintiff. Approximately 80 percent of her business consists of the sale of handbags and luggage. Witness Koren, prior to coming to the United States, designed handbags in her native country, Israel. She defined a handbag as a bag which is fashionable and stylish, that is carried by women, and is made of a nice material and looks nice. According to witness Koren exhibits 1 to 5 are handbags, and she sold bags that are identical to exhibits 1, 3, and 5 in her store. She further stated that she had sold exhibit 5 with and without the "LG" logo. The witness stated that she recognized no distinction between handbags and tote bags and that in transactions with retail customers and suppliers, exhibits 1 to 5 are commonly referred to as handbags or tote bags. Witness Koren uses tote bags as second handbags to carry personal effects such as money, lunch, and keys. In her store she has sold paper and plastic shopping bags to customers desiring to carry out their purchases in a bag.

Defendant called Ann Sanchak as its first witness. She testified she did not own a bag similar to exhibits 1 to 5. Defendant offered, and it was received in evidence, exhibit N, which is the shopping bag belonging to Miss Sanchak, who testified she used said exhibit regularly for shopping. The witness further stated that she carries a handbag in addition to exhibit N, and that her valuables are carried in the handbag. When purchasing a handbag, she always selects one which has a zipper and compartments or some secure closure. In her opinion exhibits 1 to 5 are shopping bags and not handbags.

On cross-examination the witness conceded that the bag depicted in exhibit 13 is a handbag even though it had no closure.

Helen Vogel, an employee of the Lenox Hill Senior Center, was called by defendant and testified that she carries a tote bag to work daily. Her tote bag is similar to exhibit 1, only a little larger. The witness testified that she used a handbag to carry her valuables such as keys and papers and her tote bag for shopping and carrying personal effects such as books, boots, and an umbrella, and for carrying personal articles to the beach. The witness did not consider a tote bag to be a handbag because of a lack of security and would call her tote bag a shopping bag. Prior to owning a tote bag she used a shopping bag for carrying personal articles and shopping. Exhibits 1 to 5, according to witness Vogel, are shopping bags since they are open. On one occasion her tote bag was picked, and she lost her wallet and keys.

Defendant called Jo Harris, an import specialist with the Customs Service in Miami, Fla. The witness testified that she is familiar with exhibits 1 to 5 and owns one similar to such exhibits, which she produced. It was received in evidence as exhibit O. The witness testified she obtained exhibit O as a gift when she joined the Doubleday Book Club. She utilizes exhibit O on weekdays, going to work, when she

places in it her newspaper, a large, bulky makeup kit, sometimes fruit or something to eat, reading material, and sometimes sewing or knitting. In addition, occasionally she may place it in a pair of shorts and slippers. Witness Harris then testified that these are not the types of articles she would carry in a handbag. In her handbag she carries items such as a wallet, keys, and other valuables. She considers her tote bag, exhibit O, as well as exhibits 1 to 5, to be shopping bags or tote bags. The witness further testified that her position in Customs did not include merchandise such as handbags or shopping bags.

Next called on behalf of defendant was Irwin Harold Gold, who is employed by the U.S. Customs Service as an import specialist in Chicago. The witness testified that he recently received an assignment to visit department stores in the Chicago area to make observations as to the sale of tote bags. He visited four department stores in that area and testified that in Wieboldt's Department Store articles similar to exhibit 1, but constructed similar to exhibit 5, were found in the cosmetics department. In Marshall Field's Department Store he observed an article similar to exhibit 3 in the notions department and on a counter across from the handbag department. In Montgomery Ward's Department Store he observed articles similar to exhibits 1 through 5 in between the notions and cosmetics department, and the stationery department. In his visits to Carson's Department Store and Sears Department Store, he observed no tote bags. However, in Marshall Field's Department Store in the Oak Brook Shopping Center, he observed a bag similar to exhibits 1 through 5 in the beachwear department. He also visited Horder's Stationery Store and observed articles similar to exhibits 1 to 5 displayed on a rack.

The witness further testified that he visited Kroch's and Brentano's bookshop, as well as the Dalton's bookstore, and observed articles similar to exhibits 1 through 5 displayed on a stand next to the cashier. The witness also visited five handbag shops and observed a tote bag made of burlap sack in only one of the stores.

Warner J. Heuman, chairman of the board of Uniflex Inc., manufacturers of plastic shopping bags, was called on behalf of defendant. The witness testified that he has observed articles such as exhibits 1 to 5 displayed at trade shows in which Uniflex merchandise was also displayed. The witness was of the opinion that a tote bag is one which is used to carry merchandise from one place to another, basically the same as a shopping bag. In his opinion, shopping bags and tote bags, such as exhibits 1 to 5, served the same purpose and were in direct competition with his shopping bags.

Mr. Heuman admitted that his corporation never designed, sold, or marketed tote bags such as those in issue and that his bags are

constructed by a heat sealing or gluing process and are not sewn or made of a fabric material. He was of the opinion that a tote bag is a shopping bag and not a handbag. Plastic shopping bags, such as the merchandise manufactured by his company, fall into the category of flexible plastic packaging. Such bags are not designed as fashion accessories to clothing.

Edward J. Berrigan was called to testify on behalf of defendant. Witness Berrigan is a detective with the New York City Police Department, assigned to the pickpocket and confidence squad. The witness was of the opinion that exhibits 1 through 5 are not secure from pickpockets since they are open. Detective Berrigan further testified that he had encountered cases where tote bags such as exhibits 1 through 5 had been the subject of pickpockets in which wallets and cosmetic cases were removed from the tote bags by thieves.

Samuel Roger Schoenfeld, a handbag designer and owner of a handbag marketing company, testified on behalf of defendant that he has been involved in the handbag industry since 1951. In the opinion of witness Schoenfeld, exhibits 2 to 5 are shopping bags and exhibit 1 is a handbag. The witness' sole distinction between a shopping bag and a handbag is that the latter must be secure. The witness testified that exhibits 2 to 5 are used along with a handbag to carry things that a woman might need, and that it is becoming more common for a woman to carry two handbags. According to the witness a handbag is one that is carried in the hand, such as a tote bag, either secured or unsecured, or a pocketbook.

Exhibit S was identified by Mr. Schoenfeld as a product he sells as a shopping bag. He was of the opinion that all tote bags are not handbags, but a tote bag with security is a handbag.

Witness Schoenfeld sold his merchandise to the handbag departments and luggage departments of department stores. It was the opinion of the witness that exhibit 1 was a handbag because of the presence of a detachable purse. Mr. Schoenfeld further stated that exhibits 2 to 5 would not be considered shoulder bags or clutch bags in the trade.

Defendant called Roger Gerber, a manufacturer of cut and sewn products, whose company manufactures products similar to exhibits 1 to 5. The witness testified that his company displays its goods at trade shows, but not at handbag shows. In the experience of the witness in attempting to sell his products to department stores, he was directed to the notions and stationery departments. He characterized the tote bags manufactured by his company, exhibits T, U, and V, as primarily used for carrying purchased merchandise home from the store.

Nancy McTiernan, an import specialist employed by the Customs Service in New York, testified that bags similar to exhibit 2 are dis-

played in the cosmetics department of Bloomingdales. She further testified that she did not see exhibit 2 in the handbag department of Bloomingdales.

Based upon the record it is established the involved merchandise, represented by exhibits 1–5, consists of tote bags, made of a textile material. Said items were given away as premiums or sold. The provision claimed by plaintiff, handbags, is an eo nomine provision which if established would prevail over the provision under which classification was made. This is so since item 706.24 supra, is more specific. Additionally, headnote 1 of schedule 3, part 7, subpart B, specifically excludes articles of textiles provided for elsewhere.

The primary issue presented is whether the imported tote bags are handbags as claimed or whether they are excluded from classification under item 706.24, supra, by virtue of being shopping bags in accordance with headnote 2(b) of schedule 7, part 1, subpart D. Alternatively, plaintiff claims the tote bags to be luggage under said item 706.24, supra. As indicated, supra, the provision for handbags is an eo nomine provision. An eo nomine designation is one which describes a commodity by a specific name, usually one well known to commerce. *United States* v. *Paul M. W. Bruckmann*, 65 CCPA 90, C.A.D. 1211, 582 F. 2d 622 (1978). Ordinarily use is not a criteria in determining whether merchandise is embraced within an eo nomine provision. However, use may be considered in determining the identity of an eo nomine designation. In *United States* v. *Quon Quon Company*, 46 CCPA 70, C.A.D. 699 (1959), the court, in determining whether rattancore articles were baskets or parts of furniture, made the following observation:

> While unhesitatingly granting the truth of the contention that baskets in the tariff act provides for baskets eo nomine, this does not help us in the least to decide whether the imported articles are baskets. We are not so trusting of our own notions of what things are as to be willing to ignore the purpose for which they were designed and made and the use to which they were actually put. *Of all things most likely to help in the determination of the identity of a manufactured article, beyond the appearance factors of size, shape, construction and the like, use is of paramount importance.* To hold otherwise would logically require the trial court to rule out evidence of what things actually are every time the collector thinks an article, as he sees it, is specifically named in the tariff act. [Italic added, p. 73.]

Following this principle the record establishes that the involved tote bags are utilized by women as second handbags to carry items which do not ordinarily fit within a handbag. Defendant's witnesses, Schoenfeld, Harris, and Vogel confirmed the use of the tote bag to carry items which do not ordinarily fit within a handbag. Likewise plaintiff's witnesses, Patterson, Nathan, El Fouly, Androsiglio, Avallone, and

Koren, testified to the same effect. Accordingly, it is apparent that, while a tote bag may be used to carry purchases, 9 of the 18 witnesses who testified indicated it is used for the convenience of carrying those items which do not fit within a handbag. Such testimony is sufficient to establish the use of a tote bag to be similar to a handbag and as such removes it from the category of a shopping bag which would prevent classification under item 706.24, supra. See headnote 2(b) of schedule 7, part 1, subpart D.

The court is aware of the language utilized in *Adolco Trading Co.* v. *United States*, 71 Cust. Ct. 145, D.C. 4487 (1973) which stated that the articles enumerated by the TSUS as handbags have a closure to prevent valuable and small articles from falling out or from being stolen.[2] The court therein stated that handbags are used to carry money, licenses, credit cards, cosmetics, and other personal items. According to Detective Edward J. Berrigan, called on behalf of defendant, wallets and cosmetic cases are removed from tote bags such as exhibits 1 to 5 by pickpockets. These items are ordinarily found in a handbag. Defendant's witness Vogel additionally testified she had been a victim of a pickpocket, having lost a wallet from a tote bag. Whether or not the language with respect to a closure is dicta, the U.S. International Trade Commission in its publication, "Summary of Trade and Tariff Information," USITC Publication 841, Control No. 7-1-1, November 1977, made the following observation with respect to *Adolco:*

> A number of problems have arisen concerning the proper classification of imports of luggage for duty purposes. In C.D. 4487, November 29, 1973, the U.S. Customs Court ruled that, for Customs purposes, shopping bags are not classifiable as like articles designed to contain clothing or other personal effects during travel or like containers and cases designed to be carried with the person, except handbags as defined herein (in the TSUS). The court established certain dicta which now guide classification decisions. Especially important was the court's emphasis on a closure of some type for luggage which provides security for items contained therein and the use to which the article is put.
>
> However, certain types of totes do not have closures and often serve as a *second bag* for carrying articles in addition to a handbag or sometimes serve as a substitute for a handbag. Customs classifies a bag as a handbag, rather than luggage, if it is commonly known as, or sold, or used as a handbag, whether or not it has a closure. However, other totes which are not sold or used specifically as either luggage or handbags, have no closure, but are square in design and have a double handle are usually not classified as either luggage or handbags and are generally dutiable as an article not specially provided for according to the material

[2] The court notes that defendant in its brief concedes the concept of a closure for a bag is a viable guideline, but it is not necessarily controlling.

of chief value. This can mean a substantially higher rate of duty than is applicable to luggage or handbags. It should be noted that this area of classification is still unclear and individual articles may be subject to a different classification from that described above. [Italic added, p. 5.]

Subsequent to the above the U.S. International Trade Commission issued USITC Publication 841, Control No. 7-1-8, p. 5, dated September 1980, "Summary of Trade and Tariff Information," covering handbags, and made the following statement:

Another significant problem has been that of determining whether totes should be classified as handbags, luggage, or articles, not specially provided for, of other materials. As pointed out in the *Summary of Trade and Tariff Information on Luggage* (USITC Publication 841, Control No. 7-1-1, November 1977) certain totes are classified as luggage. These bags generally have closures, clearly are designed for use during travel, and often are sold as part of a luggage set. To clarify this issue, the Customs Service published guidelines (C.S.D. 79-329, Dec. 27, 1978) as an aid in determining the proper classification of such bags, indicating they were not intended to be a definitive answer to every classification problem; rather, that they suggested an approach for dealing with handbags and totes. According to the guidelines, the characteristics of a handbag are as follows:

(a) Traditional handbags:

(1) Vary from small to large, the largest size is 14 inches in height, 12 to 14 inches in width, with no larger gusset than 3 inches (tapered gussets are up to 5 inches at the bottom). Some gussets are larger with this type of bag.

(2) Have one or more zippered wallet pockets for money and keys.

(3) Are compartmented (from one to four compartments).

(4) May or may not have outside pockets.

(5) Have flaps, zippered, or self-enclosures for the entire central portion of the body.

(6) Have hand and/or shoulder straps.

(b) Totes classified as handbags:

(1) The largest size is 14 inches in height, 12 to 14 inches in width, with no more than a 3-inch gusset.

(2) Must have a zippered wallet pocket (note item 7 for exception).

(3) May or may not have compartments.

(4) May or may not have outside pockets with or without closures.

(5) May or may not have a flap or other closure for the entire central portion of the bag body.

(6) Have hand and/or shoulder straps.

(7) The largest tote classified as a handbag without a zippered wallet pocket is 12 inches in height, 10 inches in width, and has a 3-inch gusset.

It is interesting to note that C.S.D. 79–329, referred to above, has the following introductory paragraph to the guidelines set forth, supra:

> The following guidelines are used by Customs to distinguish between handbags and totes. *These guidelines are intended to be used with flexibility*, as an aid in determining the proper classification of the merchandise. They *are not intended to be a definitive answer* to every classification problem; rather, they suggest an approach for dealing with handbags and totes. [Italic supplied.]

In the case at bar it is clear the involved tote bags are used primarily by women as handbags, as defined in headnote 2(b), schedule 7, part 1, subpart D, albeit a second handbag, and accordingly are properly subject to classification as such as claimed by plaintiff. In view of the foregoing, consideration of the luggage issue need not be reached.

Judgment will be entered accordingly.

Decisions of the United States Customs Court

Abstracts

Abstracted Protest Decisions

DEPARTMENT OF THE TREASURY, *November 3, 1980.*

The following abstracts of decisions of the United States Customs Court at New York are published for the information and guidance of officers of the customs and others concerned. Although the decisions are not of sufficient general interest to print in full, the summary herein given will be of assistance to customs officials in easily locating cases and tracing important facts.

ROBERT E. CHASEN,
Commissioner of Customs.

DECISION NUMBER	JUDGE & DATE OF DECISION	PLAINTIFF	COURT NO.	ASSESSED	HELD	BASIS	PORT OF ENTRY AND MERCHANDISE
				Par. or Item No. and Rate	Par. or Item No. and Rate		
P80/158	Watson, J. October 27, 1980	Colonna & Co., Inc.	67/24614, etc.	Item 515.24 21%, 18.5%, 16.5% or 10.5%	Item 515.21 10.5¢, 9¢, 8¢ or 5¢ per cubic foot	Colonna & Co., Inc. v. U.S. (C.D. 4841)	New York Rough quarried travertine

P80/159	Watson, J. October 27, 1980	Colonna & Co., Inc.	67/81687, etc.	Item 514.57 50¢ or 45¢ per cubic foot (items marked "A") Items 515.24 21% or 18.5% (items marked "B")	Item 514.51 27.5¢ or 24¢ per cubic foot (items marked "A") Item 515.21 10.5¢ or 9¢ per cubic foot (items marked "B")	Colonna & Co., Inc. v. U.S. (C.D. 4841)	New York Rough quarried marble (items marked "A"); rough quarried travertine (items marked "B")
P80/160	Watson, J. October 27, 1980	Domestic Marble & Stone Corp.	67/24613, etc.	Item 515.24 21% or 14.5%	Item 515.21 10.5¢ or 7¢ per cubic foot	Colonna & Co., Inc. v. U.S. (C.D. 4841)	New York Rough quarried travertine
P80/161	Watson, J. October 27, 1980	Domestic Marble & Stone Corp.	67/71842	Item 514.57 50¢ per cubic foot (items marked "A") Item 515.24 21% (items marked "B")	Item 514.51 27.5¢ per cubic foot (items marked "A") Item 515.21 10.5¢ per cubic foot (items marked "B")	Colonna & Co., Inc. v. U.S. (C.D. 4841)	New York Rough quarried marble (items marked "A"); rough quarried travertine (items marked "B")
P80/162	Watson, J. October 27, 1980	Domestic Marble & Stone Corp.	67/81688, etc.	Item 514.57 50¢, 45¢ or 40¢ per cubic foot	Item 514.51 27.5¢, 24¢ or 22¢ per cubic foot	Colonna & Co., Inc. v. U.S. (C.D. 4841)	New York Rough quarried marble

DECISION NUMBER	JUDGE & DATE OF DECISION	PLAINTIFF	COURT NO	ASSESSED	HELD	BASIS	PORT OF ENTRY AND MERCHANDISE
				Par. or Item No. and Rate	Par. or Item No. and Rate		
P80/163	Richardson, J. October 28, 1980	Herbert Winston Associates Inc.	79-9-01386	Item 386.50 14% (items marked "A" and "B")	Item A735.20 Free of duty pursuant to General Headnote 3(c) of TSUS, authorized by title V of Trade Act of 1974, and Ex. Order No. 11888 of 11/26/75 (items marked "A") Item 735.20 10% (items marked "B")	Agreed statements of facts	New York Wrist and ankle weights 1% produced within Taiwan (items marked "A"); wrist and ankle weights (items marked "B")
P80/164	Watson, J. October 28, 1980	Colonna & Co., Inc.	67/66583, etc,	Item 514.57 50¢, 45¢ or 25¢ per cubic foot	Item 514.51 27.55, 24¢ or 13.5¢ per cubic foot	Colonna & Co., Inc. v. U.S. (C.D. 4841)	New York Rough quarried marble
P80/165	Watson, J. October 28, 1980	World Famous Sales, Inc.	76-8-01810	Item 389.60 25¢ per lb. 15%	Item 735.20 10%	The Newman Importing Co. v. U.S. (C.D. 4648)	Boston Nylon backpacking tents
P80/166	Maletz, J. October 28, 1980	Spiegel, Inc.	76-1-00212	Item 737.80 22%	Item 725.50 8%	Amico, Inc. v. U.S. (C.A.D. 1214)	Chicago Music boxes with revolving figures

P80/167	Ford, J. October 30, 1980	S. B. Penick & Company	77-3-00301, etc.	Item 184.75 7.5%	Item 470.85 4%	Joseph F. Hendrix a/c Productos Deshidratados De Mexico, S.A. v. U.S. (C.D. 4809)	New York Marigold extracts
P80/168	Ford, J. October 30, 1980	S. B. Penick & Company	77-4-00624, etc.	Item 184.75 7.5%	Item 470.85 4%	Joseph F. Hendrix a/c Productos Deshidratados De Mexico, S.A. v. U.S. (C.D. 4809)	New York Marigold extracts
P80/169	Ford, J. October 30, 1980	S. B. Penick & Company	78-2-00334, etc.	Item 184.75 7.5%	Item 470.85 4%	Joseph F. Hendrix a/c Productos Deshidratados De Mexico, S.A. v. U.S. (C.D. 4809)	New York Marigold extracts
P80/170	Richardson, J. October 30, 1980	Alltransport, Inc.	78-7-01249	Item 708.89 22.5%	Item 708.80 15%	Wild Heerbrugg Instruments, Inc. v. U.S. (C.D. 4767)	New York Microscopy phototubes
P80/171	Richardson, J. October 30, 1980	Calif. Custom Acc./Hawk, Division of Orion Industries	76-8-01785	Item 648.97 11%	Item 660.52 4%	Agreed statement of facts	Los Angeles Wing nuts
P80/172	Richardson, J. October 30, 1980	H. E. Lauffer Co., Inc.	77-1-00074-S	Item 533.66 10¢ per doz. pcs.+36% Item 533.65 10¢ per doz. pcs.+55%	Item 533.28 5¢ per doz. pcs. +10.5%	Agreed statement of facts	New York Earthenware or stoneware articles available in specified sets having the claimed values
P80/173	Maletz, J. October 30, 1980	Silvestri Art Mfg. Co.	76-5-01146	Item 737.80 22%	Item 725.50 8%	Amico, Inc. v. U.S. (C.A.D. 1214)	Chicago Music boxes
P80/174	Boe, J. October 30, 1980	Westinghouse Trading Corp.	78-6-01076, etc.	Item 536.11 22.5%	Item 535.14 15%	Westinghouse Trading Company v. U.S. (C.D. 4817)	New York Translucent alumina tubes
P80/175	Boe, J. October 30, 1980	Westinghouse Trading Corp.	79-5-00843, etc.	Item 536.11 22.5%	Item 535.14 15%	Westinghouse Trading Company v. U.S. (C.D. 4817)	New York Translucent alumina tubes

Decisions of the United States Customs Court

Abstract

Abstracted Reappraisement Decisions

DECISION NUMBER	JUDGE & DATE OF DECISION	PLAINTIFF	COURT NO.	BASIS OF VALUATION	HELD VALUE	BASIS	PORT OF ENTRY AND MERCHANDISE
R80/303	Richardson, J. October 27, 1980	Allen-Bradley Company	77-1-00004	Constructed value	Represented by appraised unit values which appear in schedule B attached to decision and judgment, less profit on assists which was provided free of charge to the assembler; these values contain amounts subject to allowances under items 807.00 and 800.00 as specified on said schedule B	Agreed statement of facts	El Paso Electric components

R80/304	Richardson, J. October 27, 1980	Conti Rubber Products Inc.	75-1-00310, etc.	Foreign value	Appropriate claimed unit values (all in Deutsche mark) listed on schedule attached to decision and judgment	Agreed statement of facts	Detroit Various automotive tires
R80/305	Boe, J. October 27, 1980	Conti Rubber Products Inc.	74-10-02691, etc.	Foreign value	Appropriate claimed unit values (all in Deutsche mark) listed on schedule attached to decision and judgment	Agreed statement of facts	Boston Various automotive tires
R80/306	Richardson, J. October 28, 1980	Conti Rubber Products Inc.	75-1-00307	Foreign value	Appropriate claimed unit values (all in Deutshe imark) listed on schednle attached to deceious and judgment	Agreed statement of facts	New Orleans Various automotive tires
R80/307	Richardson, J. October 28, 1980	Conti Rubber Products Inc.	75-5-01295	Foreign value	Appropriate claimed unit values (all in Deutsche mark) listed on schedule attached to decision and judgment	Agreed statement of facts	Cleveland Various automotive tires
R80/308	Richardson, J. October 28, 1980	Conti Rubber Products Inc.	75-5-01298, etc.	Foreign value	Appropriate claimed unit values (all in Deutsche mark) listed on schedule attached to decision and judgment	Agreed statement of facts	Savannah Various automotive tires

DECISION NUMBER	JUDGE & DATE OF DECISION	PLAINTIFF	COURT NO.	BASIS OF VALUATION	HELD VALUE	BASIS	PORT OF ENTRY AND MERCHANDISE
R80/309	Richardson, J. October 28, 1980	Conti Rubber Products Inc.	75-9-02475	Foreign value	Appropriate claimed unit values (all in Deutsche mark) listed on schedule attached to decision and judgment	Agreed statement of facts	Boston Various automotive tires
R80/310	Richarson, J. October 28, 1980	Conti Rubber Products Inc.	76-5-01240, etc.	Foreign value	Appropriate claimed unit values (all in Deutsche mark) listed on schedule attached to decision and judgment	Agreed statement of facts	San Francisco Various automotive tires
R80/311	Richardson, J. October 28, 1980	Conti Rubber Products Inc.	76-5-01292, etc.	Foreign value	Appropriate claimed unit values (all in Deutsche mark) listed on schedule attached to decision and judgment	Agreed statement of facts	Philadelphia Various automotive tires
R80/312	Richardson, J. October 28, 1980	Conti Rubber Products Inc.	76-5-01338	Foreign value	Appropriate claimed unit values (all in Deutsche mark) listed on schedule attached to decision and judgment	Agreed statement of facts	San Juan Various automotive tires
R80/313	Richardson, J. October 28, 1980	Conti Rubber Products Inc.	76-7-01599	Foreign value	Appropriate claimed unit values (all in Deutsche mark) listed on schedule attached to decision and judgment	Agreed statement of facts	Los Angeles Various automotive tires

R80/314	Richardson, J. October 28, 1980	Conti Rubber Products Inc.	77-1-00020	Foreign value	Appropriate claimed unit values (all in Deutsche mark) listed on schedule attached to decision and judgment	Agreed statement of facts	Boston Various automotive tires
R80/315	Richardson, J. October 28, 1980	Conti Rubber Products Inc.	77-7-01156	Foreign value	Appropriate claimed unit values (all in Deutsche mark) listed on schedule attached to decision and judgment	Agreed statement of facts	Detroit Various automotive tires
R80/316	Richardson, J. October 28, 1980	A. W. Fenton & Co., Inc., et al.	R65/4153	Export value	Invoice unit prices less, where applicable, items specified on invoices as saved packing	Agreed statement of facts	Cleveland Instruments and parts
R80/317	Richardson, J. October 28, 1980	Inter-Maritime Fwdg. Co. Inc.	236816-A, etc.	Cost of production	As indicated on schedule B attached to decision and judgment	Charles Stockheimer, Inter-Maritime Forwarding Co., Inc. v. U.S. (C.A.D. 642)	New York Cashmere sweaters
R80/318	Richardson, J. October 28, 1980	Inter-Maritime Fwdg. Co. Inc.	250835-A, etc.	Cost of production	As indicated on schedule B attached to decision and judgment	Charles Stockheimer, Inter-Maritime Forwarding Co., Inc. v. U.S. (C.A.D. 642)	New York Cashmere sweaters
R80/319	Richardson, J. October 28, 1980	Inter-Maritime Fwdg. Co., Inc.	276025-A, etc.	Cost of production	As indicated on schedule B attached to decision and judgment	Charles Stockheimer, Inter-Maritime Forwarding Co., Inc. v. U.S. (C.A.D. 642)	New York Cashmere sweaters

DECISION NUMBER	JUDGE & DATE OF DECISION	PLAINTIFF	COURT NO.	BASIS OF VALUATION	HELD VALUE	BASIS	PORT OF ENTRY AND MERCHANDISE
R80/320	Re, C.J. October 30, 1980	Brown Boveri Corp.	76-1-00024, etc.	Export value	Appraised values shown on entry papers less additions included to reflect currency revaluation	C.B.S. Imports Corp. v. U.S. (C.D. 4739)	New York Various articles
R80/321	Re, C.J. October 30, 1980	Brown Boveri Corp.	77-3-00374, etc.	Export value	Appraised values shown on entry papers less additions included to reflect currency revaluation	C.B.S. Imports Corp. v. U.S. (C.D. 4739)	Portland, Oreg. Various articles
R80/322	Re, C.J. October 30, 1980	Brown Boveri Corp.	77-11-04715, etc.	Export value	Appraised values shown on entry papers less additions included to reflect currency revaluation	C.B.S. Imports Corp. v. U.S. (C.D. 4739)	New Orleans Various articles
R80/323	Re, C.J. October 30, 1980	Starlight Trading, Inc.	75-7-01738	Export value	Appraised values shown on entry papers less additions included to reflect currency revaluation	C.B.S. Imports Corp. v. U.S. (C.D. 4739)	New York Various articles
R80/324	Re, C. J. October 30, 1980	Starlight Trading, Inc.	75-10-2667	Export value	Appraised values shown on entry papers less additions included to reflect currency revaluation	C.B.S. Im orts Corp. v. U.S. (C.D. 4739)	New York Various articles

R80/325	Ford, J. October 30, 1980	A. W. Fenton & Co., Inc., et al.	R65/4152, etc.	Export value	Invoice unit price less, where applicable, items specified on invoices as saved packing	Agreed statement of facts	Cleveland Instruments and parts
R80/326	Richardson, J. October 30, 1980	Antonia Realty & Warehousing Corp.	75-1-00303	Foreign value	Appropriate claimed unit values (all in Deutsche mark) listed on schedule attached to decision and judgment	Agreed statement of facts	San Francisco Various automotive tires
R80/327	Richardson, J. October 30, 1980	Bus and Truck Supply Co.	76-1-00090	Export value	$51,800 per bus, plus or minus any increases or reductions in above price, due to addition or elimination of various parts, less 10%, less value of components of U.S. origin allowed on liquidation, plus value of any Michelin tires included in shipments	Agreed statement of facts	New Orleans Inter-city passenger buses
R80/328	Richardson, J. October 30, 1980	Bus and Truck Supply Co. Darrell J. Sekin & Co.	78-9-01588	Export value	$54,875 per bus, plus or minus any increases or reductions in above price, due to addition or elimination of various parts, less 10%, less value of components of U.S. origin allowed on liquidation, plus value of any Michelin tires included in shipments	Agreed statement of facts	Houston Inter-city passenger buses

DECISION NUMBER	JUDGE & DATE OF DECISION	PLAINTIFF	COURT NO.	BASIS OF VALUATION	HELD VALUE	BASIS	PORT OF ENTRY AND MERCHANDISE
R80/329	Richardson, J. October 30, 1980	Conti Rubber Products Inc.	75-1-00304	Foreign value	Appropriate claimed unit values (all in Deutsche mark) listed on schedule attached to decision and judgment	Agreed statement of facts	San Francisco Various automotive tires
R80/330	Richardson, J. October 30, 1980	Conti Rubber Products Inc.	77-3-00331, etc.	Foreign value	Appropriate claimed unit values (all in Deutsche mark) listed on schedule attached to decision and judgment	Agreed statement of facts	Chicago Various automotive tires
R80/331	Richardson, J. October 30, 1980	Conti Rubber Products Inc.	77-3-00333, etc.	Foreign value	Appropriate claimed unit values (all in Deutsche mark) listed on schedule attached to decision and judgment	Agreed statement of facts	San Francisco Various automotive tires
R80/332	Richardson, J. October 30, 1980	Merit International Corp.	79-9-02212	Constructed value	Invoice unit value, plus amounts for ocean freight from Japan to Canada, and freight chargers to the U.S., packed, as set forth in invoices, or in those instances where ocean freight and shipping charges are not set forth, at invoice units of value plus 10%, packed	Agreed statement of facts	Los Angeles Tape players, headphones, radio converters, speakers, etc.

R80/333	Richardson, J. October 30, 1980	Sercel Incorporated	80-4-00650	Export value	Invoice unit values plus 50% of difference between invoice unit values and appraised values	Agreed statement of facts	Houston Seismographs and parts thereof
R80/334	Richardson, J. October 30, 1980	Trans-Ocean Import Co. Inc.	247024-A, etc.	Export value	F.o.b. unit invoice prices plus 20% of difference between f.o.b. unit invoice prices and appraised values	Agreed statement of facts	Baltimore Cotton and wool hooked rugs
R80/335	Richardson, J. October 30, 1980	Trans-Ocean Import Co. Inc.	R64/19692	Export value	F.o.b. unit invoice prices plus 20% of difference between f.o.b. unit invoice prices and appraised values	Agreed statement of facts	Baltimore Oval tube rugs
R80/336	Boe, J. October 30, 1980	Conti Rubber Products Inc.	74-7-01790, etc.	Foreign value	Appropriate claimed unit values (all in Deutsche mark) listed on schedule attached to decision and judgment	Agreed statement of facts	Seattle Various automotive tires
R80/337	Boe, J. October 30, 1980	Conti Rubber Products Inc.	74-9-02435, etc.	Foreign value	Appropriate claimed unit values (all in Deutsche mark) listed on schedule attached to decision and judgment	Agreed statement of facts	Philadelphia Various automotive tires
R80/338	Boe, J. October 30, 1980	Comti Rubber Products Inc.	74-9-02437, etc.	Foreign value	Appropriate claimed unit values (all in Deutsche mark) listed on schedule attached to decision and judgment	Agreed statement of facts	San Juan Various automotive tires

DECISION NUMBER	JUDGE & DATE OF DECISION	PLAINTIFF	COURT NO.	BASIS OF VALUATION	HELD VALUE	BASIS	PORT OF ENTRY AND MERCHANDISE
R80/339	Boe, J. October 30, 1980	Conti Rubber Products Inc.	74-10-02864	Foreign value	Appropriate claimed unit values (all in Deutsche mark) listed on schedule attached to decision and judgment	Agreed statement of facts	Chicago Various automotive tires
R80/340	Boe, J. October 30, 1980	Conti Rubber Products Inc.	74-10-02865, etc.	Foreign value	Appropriate claimed unit values (all in Deutsche mark) listed on schedule attached to decision and judgment	Agreed statement of facts	Chicago Various automotive tires

Judgment of the U.S. Customs Court in Appealed Case

OCTOBER 30, 1980

Appeal 79-36.—Schering Corporation *v.* United States.—MOTION FOR SUSPENSION—CROSS-MOTION TO DISMISS—TIMELINESS OF PROTEST—DISMISSAL FOR LACK OF JURISDICTION—REQUEST FOR HEARING ON JURISDICTIONAL ISSUE.—Order of May 4, 1979 (not published) granting defendant's motion to dismiss Court No. 76-12-02625 for lack of jurisdiction (rehearing denied July 13, 1979) affirmed July 17, 1980 (C.A.D. 1250).

ERRATUM

In CUSTOMS BULLETIN, volume 14, No. 42, dated October 15, 1980, in C.D. 4873, page 15 should read as follows:

Alice Daniel, Assistant Attorney General; *Joseph I. Liebman*, Attorney in Charge, Field Office for Customs Litigation (*Jerry P. Wiskin* on the memorandum) for the defendant.

MALETZ, Judge: Plaintiff voluntarily tendered $91,992.35 to Customs in connection with a penalty investigation under section 592 of the Tariff Act of 1930, as amended (19 U.S.C. 1592) for understating the value of certain shipments of switches, indicator lights, and related products. Subsequently, Customs refused to refund the moneys thus tendered. Plaintiff then brought this action to obtain recovery.

Defendant has moved to dismiss the action or alternatively for summary judgment on the ground that Customs' refusal to refund the moneys tendered does not constitute an "exaction" within the meaning of section 514(a)(3) of the Tariff Act of 1930, as amended (19 U.S.C. 1514(a)(3))[1] and that the court therefore lacks jurisdiction.

Plaintiff, on the other hand, contends that by virtue of sections 520(a)(3) of the Tariff Act of 1930, as amended (19 U.S.C. 1520(a)(3))[2] and 514(a)(3), Customs' refusal to refund the additional duties thus voluntarily tendered amounts to an "exaction" within the meaning of section 514(a)(3); that the court therefore has jurisdiction; and that plaintiff is entitled to summary judgment on its cross-motion.

---

[1] 19 U.S.C. 1514 reads in part:

(a) Except as provided in section 1501 of this title (relating to voluntary reliquidations), section 1516 of this title (relating to petitions by American manufacturers, producers, and wholesalers), section 1520 of this title (relating to refunds and errors), and section 1521 of this title (relating to reliquidations on account of fraud), decisions of the appropriate Customs officer, including the legality of all orders and findings entering into the same, as to—

(1) the appraised value of merchandise;

(2) the classification and rate and amount of duties chargeable;

(3) all charges or exactions of whatever character within the jurisdiction of the Secretary of the Treasury;

* * * * * * *

shall be final and conclusive upon all persons (including the United States and any officer thereof) unless a protest is filed in accordance with this section, or unless a civil action contesting the denial of a protest, in whole or in part, is commenced in the U.S. Customs Court in accordance with section 2632 of title 28 within the time prescribed by section 2631 of that title.

Also relevant is 28 U.S.C. 1582 which delineates the jurisdiction of the court and provides in part:

(a) The Customs Court shall have exclusive jurisdiction of civil actions instituted by any person whose protest pursuant to the Tariff Act of 1930, as amended, has been denied, in whole or in part, by the appropriate Customs officer, where the administrative decision, including the legality of all orders and findings entering into the same, involves: (1) the appraised value of merchandise; (2) the classification and rate and amount of duties chargeable; (3) all charges or exactions of whatever character within the jurisdiction of the Secretary of the Treasury, * * *

For the reasons that follow, the court concludes that the court lacks jurisdiction and therefore dismisses the action.

The facts giving rise to the controversy are undisputed. They are as follows: During the period from July 9, 1970, to January 29, 1974, plaintiff imported switches, indicator lights, and other related materials which were assembled in Mexico from U.S. products. The merchandise

[2] 19 U.S.C. 1520(a)(3) provides in part:

(a) The Secretary of the Treasury is authorized to refund duties or other receipts in the following cases:

* * * * * * *

(3) *Fines, penalties, and forfeitures.*—Whenever money has been deposited in the Treasury on account of a fine, penalty, or forfeiture which did not accrue, or which is finally determined to have accrued in an amount less than that so deposited, or which is mitigated to an amount less than that so deposited or is remitted.

International Trade Commission Notices

Investigations by the U.S. International Trade Commission

DEPARTMENT OF THE TREASURY,
November 13, 1980.

The appended notices relating to investigations by the U.S. International Trade Commission are published for the information of Customs Officers and others concerned.

R. E. CHASEN,
Commissioner of Customs.

In the Matter of CERTAIN MULTICELLULAR PLASTIC FILM	Investigation No. 337-TA-54A

ORDER

Pursuant to my authority as Chief Administrative Law Judge of this Commission, I hereby designate Administrative Law Judge Janet D. Saxon as Presiding Officer in this investigation.

The Secretary shall serve a copy of this order upon all parties of record and shall publish it in the Federal Register.

Issued: November 4, 1980.

DONALD K. DUVALL,
Chief Administrative Law Judge.

Notice of Closing of New York City Field Office

AGENCY: U.S. International Trade Commission.

ACTION: Notice of closing of New York City field office.

SUMMARY: Notice is hereby given, pursuant to 5 U.S.C. 552(a), that the U.S. International Trade Commission is closing the Commission's New York City field office located in 6 World Trade Center, suite 629, New York, N.Y. 10048, effective close of business Friday,

November 7, 1980. All functions and personnel, with the exception of two employees of the Energy and Chemicals Division, are being transferred to the Commission's Washington, D.C., office located at 701 E Street NW., Washington, D.C. 20436. The two employees of the Energy and Chemicals Division are in the process of being relocated within the World Trade Center.

Services previously provided by the Commission at its New York City field office will terminate effective close of business Friday, November 7, 1980, and will henceforth be provided at the Commission's Washington, D.C., office. The Commission will no longer post formal notice of the receipt of properly filed documents, of the institution of investigations, of public hearings, and other formal Commission actions in the New York City field office and is closing the reading room previously located in room 629 of the World Trade Center.

Any persons desiring copies of formal Commission notices or seeking information from the Commission should contact the Office of the Secretary, U.S. International Trade Commission, 701 E Street NW., Washington, D.C. 20436; telephone 202-523-0161. The Commission will continue to operate reading rooms in Washington, D.C., in the Office of the Secretary and in the Commission Library for interested members of the public.

In view of the changes in the Commission's organizational structure resulting from the closing of its New York City field office, the Commission hereby gives notice of its intention in due course to publish separately a revised Commission organizational statement pursuant to 5 U.S.C. 552(a)(1)(E).

EFFECTIVE DATE: November 7, 1980.

FOR FURTHER INFORMATION CONTACT: Warren H. Maruyama, Esq., Office of the General Counsel, U.S. International Trade Commission, 701 E Street NW., Washington, D.C. 20436; telephone 202-523-0143.

By order of the Commission.

Issued: November 4, 1980.

KENNETH R. MASON,
Secretary.

In the Matter of CERTAIN APPARATUS FOR THE CONTINUOUS PRODUCTION OF COPPER ROD	Investigation No. 337-TA-89

Notice of Determination, Order, and Opinion

AGENCY: U.S. International Trade Commission.

ACTION: Determination, order, and opinion regarding the issuance of a temporary exclusion order.

SUMMARY: On October 23, 1980, the Commission voted to issue a temporary exclusion order in the above-referenced investigation. The temporary exclusion order prohibits the importation into the United States of any rolling mill described by claims 7, 9, 11, or 12, of U.S. Letters Patent 4,129,170 and components of such rolling mills.

SUPPLEMENTARY INFORMATION: This investigation, under section 337 of the Tariff Act of 1930, was instituted by notice published in the Federal Register on August 13, 1980 (45 F.R. 53923). Southwire Company of Carrollton, Ga., is the complainant in this investigation. Krupp G.m.b.H. of the Federal Republic of Germany and Krupp International, Inc. of Harrison, N.Y., were named as respondents in the August 13 notice of investigation. On October 23, 1980, the Commission voted to issue a temporary exclusion order, having found that there is reason to believe that section 337 is being violated.

A public version of the Commission's determination and order and the opinion in support thereof is available in the Office of the Secretary, USITC, 701 E Street NW., Washington, D.C. 20436; telephone 202-523-0161.

FOR FURTHER INFORMATION CONTACT: Jeffrey Neeley, Esq., Office of the General Counsel, U.S. International Trade Commission, 701 E Street NW., Washington, D.C. 20436; telephone 202-523-0359.

By order of the Commission.

Issued: November 6, 1980.

KENNETH R. MASON,
Secretary.

Index

U.S. Customs Service

Treasury Decisions:

	T.D. No.
Trade agreements act of 1979–conforming amendments to the Customs Regulations	80–271
Consolidated aircraft bonds	80–272
Carriers bonds	80–273
Foreign currencies:	
Daily certified rates—October 27–31, 1980	80–274
Rates which varied from quarterly rate October 27–31, 1980	80–275

Court of Customs and Patent Appeals

	C.A.D. No.
Norman G. Jensen, Inc., a/c Calhoun Collector's Inc. v. United States	1255

Customs Court

Articles not specially provided for of textile material; eo nomine provision v. basket provision, C.D. 4878

Bags:
- Shopping, C.D. 4878
- Tote, C.D. 4878

Construction:
- Tariff Schedules of the United States:
  - Item 389.60, C.D. 4878
  - Item 389.62, C.D. 4878
  - Item 706.24, C.D. 4878
  - Schedule 3, part 7, subpart B, C.D. 4878
  - Schedule 7, part 1, subpart D, headnote 2(b), C.D. 4878

Definitions:
- Handbags, C.D. 4878
- Luggage, C.D. 4878

Eo nomine:
- Designation: use of merchandise, C.D. 4878
- Provision:
  - Handbags, C.D. 4878
  - V. basket provision; articles not specially provided for of textile material, C.D. 4878

Handbags:
- Eo nomine provision, C.D. 4878
- Tote bags, C.D. 4878

Judgment in appealed case (p. —);
- Appeal 79–36—Motion for suspension; cross-motion to dismiss; timeliness of protest; dismissal for lack of jurisdiction; request for hearing on jurisdictional issue

Luggage, C.D. 4878
Shopping bags distinguished from tote bags, C.D. 4878
Tote bags:
    Distinguished from shopping bags, C.D. 4878
    Handbags, C.D. 4878
Use of merchandise; eo nomine designation, C.D. 4878
Words and phrases:
    Handbags, C.D. 4878
    Luggage, C.D. 4878

333-195 Item 950-D T 1.11/3:14/49
378 & contin
9247

Customs Bulletin

Regulations, Rulings, Decisions, and Notices concerning Customs and related matters

and Decisions

of the United States Court of Customs and Patent Appeals and the United States Customs Court

Vol. 14 DECEMBER 3, 1980 No. 49

This issue contains

T.D. 80–276 through 80–281
Proposed Rulemaking
C.S.D. 80–226 through 80–250
Slip Op. 80–1
Recent Unpublished Customs Service Decisions
International Trade Commission Notice

THE DEPARTMENT OF THE TREASURY
U.S. Customs Service

NOTICE

The abstracts, rulings, and notices which are issued weekly by the U.S. Customs Service are subject to correction for typographical or other printing errors. Users may notify the U.S. Customs Service, Logistics Management Division, Washington, D.C. 20229, of any such errors in order that corrections may be made before the bound volumes are published.

For sale by the Superintendent of Documents, U.S. Government Printing Office, Washington, D.C. 20402. Price: $2.25 (single copy domestic); $2.85 (single copy foreign). Subscription price: $85.00 a year domestic; $106.25 a year foreign.

U.S. Customs Service

Treasury Decision

(T.D. 80-276)

Foreign Currencies—Daily Rates For Countries Not on Quarterly List

Rates of exchange based on rates certified to the Secretary of the Treasury by the Federal Reserve Bank of New York for the Brazil cruzeiro, People's Republic of China yuan, Hong Kong dollar, Iran rial, Philippines peso, Singapore dollar, Thailand baht (tical), and Venezuela bolivar

The Federal Reserve Bank of New York, pursuant to section 522(c), Tariff Act of 1930, as amended (31 U.S.C. 372 (c)), has certified buying rates for the dates and foreign currencies shown below. The rates of exchange, based on these buying rates, are published for the information and use of Customs officers and others concerned pursuant to part 159, subpart C, Customs Regulations (19 CFR 159, subpart C).

Brazil cruzeiro:	
November 3–7, 1980	$0.0167
People's Republic of China yuan:	
November 3, 1980	$0.663350
November 4, 1980	Bank holiday
November 5, 1980	.660066
November 6, 1980	.655480
November 7, 1980	.652869
Hong Kong dollar:	
November 3, 1980	$0.198334
November 4, 1980	Bank holiday
November 5, 1980	.196078
November 6, 1980	.195963
November 7, 1980	.195886
Iran rial:	
November 3–7, 1980	Not available
Philippines peso:	
November 3–6, 1980	$0.1338
November 7, 1980	.1324

Singapore dollar:	
November 3, 1980	$0.479616
November 4, 1980	Bank holiday
November 5, 1980	.477213
November 6, 1980	.477099
November 7, 1980	.476644
Thailand baht (tical):	
November 3–6, 1980	$0.0488
November 7, 1980	.0485
Venezuela bolivar:	
November 3–7, 1980	$0.2328

(LIQ-3-01 O:C:E)

Dated: November 7, 1980.

NANCY I. BROWN,
Chief,
Customs Information Exchange.

(T.D. 80-277)

Foreign Currencies—Variances From Quarterly Rate

The following rates of exchange are based upon rates certified to the Secretary of the Treasury by the Federal Reserve Bank of New York, pursuant to section 522(c), Tariff Act of 1930, as amended (31 U.S.C. 372(c)), and reflect variances of 5 per centum or more from the quarterly rate published in T.D. 80-249 for the following countries. Therefore, as to entries covering merchandise exported on the dates listed, whenever it is necessary for Customs purposes to convert such currency into currency of the United States, conversion shall be at the following rates:

Austria schilling:	
November 3, 1980	$0.073529
November 4, 1980	Bank holiday
November 5, 1980	.072833
November 6, 1980	.072516
November 7, 1980	.072202
Belgium franc:	
November 3, 1980	$0.032595
November 4, 1980	Bank holiday
November 5, 1980	.032144
November 6, 1980	.032051
November 7, 1980	.031888

Denmark krone:	
November 3, 1980	$0.169434
November 4, 1980	Bank holiday
November 5, 1980	.167785
November 6, 1980	.167392
November 7, 1980	.166903
France franc:	
November 5, 1980	$0.223514
November 6, 1980	.223115
November 7, 1980	.221976
Germany deutsche mark:	
November 3, 1980	$0.521921
November 4, 1980	Bank holiday
November 5, 1980	.514589
November 6, 1980	.513927
November 7, 1980	.510725
Ireland pound:	
November 3, 1980	$1.9600
November 4, 1980	Bank holiday
November 5, 1980	1.9330
November 6, 1980	1.9220
November 7, 1980	1.9180
Italy lira:	
November 5, 1980	$0.001094
November 6, 1980	.001093
November 7, 1980	.001086
Netherlands guilder:	
November 3, 1980	$0.482859
November 4, 1980	Bank holiday
November 5, 1980	.475737
November 6, 1980	.474992
November 7, 1980	.474496
Sri Lanka rupee:	
November 3–7, 1980	$0.058140
Switzerland franc:	
November 5, 1980	$0.574053
November 6, 1980	.572967
November 7, 1980	.573066

(LIQ-3-01 O:C:E)

Dated: November 7, 1980.

NANCY I. BROWN,
Chief,
Customs Information Exchange.

(T.D. 80–278)

Bonds

Approval of a carrier's bond, Customs form 3587

A bond of a carrier for the transportation of bonded merchandise has been approved as shown below. The approval of the bond is temporary until April 19, 1981.

Dated: November 14, 1980.

Name of principal and surety	Date of bond	Date of approval	Filed with district director/area director/amount
B & W Express, P.O Box 2122, San Antonio, TX; motor carrier; Old Republic Ins. Co.	Sept. 15, 1980	Oct. 16, 1980	Laredo, TX; $25,000

(BON–3–03)

MARILYN G. MORRISON,
Director,
Carriers, Drawback and Bonds Division.

(T.D. 80–279)

Customhouse Cartman License—Revocation

Revocation of Customhouse Cartman's license No. 13 issued by the District Director of Customs, New Orleans, La., to Dave Streiffer Co.

Notice is hereby given that on November 17, 1980, pursuant to the provisions of section 565, Tariff Act of 1930, as amended, and section 112.30 of the Customs Regulations (19 CFR 112.30), it was decided to revoke the Customhouse Cartman's license No. 13 issued in the District of New Orleans on May 20, 1969 to Dave Streiffer Co., of New Orleans, La. This revocation is effective as of December 8, 1980.

Dated: November 17, 1980.

WILLIAM T. ARCHEY,
Acting Commissioner of Customs.

(T.D. 80–280)

Synopses of drawback decisions

The following are synopses of drawback rates issued March 13, 1980, to September 15, 1980, inclusive, pursuant to sections 22.1 through

22.5, inclusive, Customs Regulations; and approvals under section 22.6, Customs Regulations.

In the synopses below are listed, for each drawback rate approved under 19 U.S.C. 1313(b), the name of the company, the specified articles on which drawback is authorized, the merchandise which will be used to manufacture or produce these articles, the factories where the work will be accomplished, the date the statement was signed, the basis for determining payment, the Regional Commissioner to whom the rate was forwarded, and the date on which it was forwarded.

(DRA-1-09)

Dated: November 17, 1980.

GEORGE C. STEUART
(For Marilyn G. Morrison, Director,
Carriers, Drawback and Bonds Division).

(A) Company: Chevron Chemical Co.
Articles: Lubricating oil additives.
Merchandise: Neutral calcium sulfonate.
Factory: Belle Chasse, La.
Statement signed: December 17, 1979.
Basis of claim: Used in.
Rate forwarded to Regional Commissioner of Customs: New Orleans, August 25, 1980.

(B) Company: Consolidated Systems, Inc.
Articles: Steel roof deck, composite steel deck, consoliform (slabform) steel-drywall systems.
Merchandise: Light gauge steel sheet in coils, galvanized.
Factory: Columbia, S.C.
Statement signed: July 8, 1980.
Basis of claim: Appearing in.
Rate forwarded to Regional Commissioner of Customs: Miami, August 15, 1980.

(C) Company: Crystal Soda Water Co.
Articles: Canned and bottled carbonated soft drink beverages.
Merchandise: Liquid refined sugar.
Factory: Scranton, Pa.
Statement signed: February 23, 1980.
Basis of claim: Appearing in.
Rate forwarded to Regional Commissioner of Customs: New York, August 25, 1980.

(D) Company: Dartmouth Finishing Corp.
Articles: Bleached, dyed and/or printed piece goods.
Merchandise: Piece goods.
Factory: New Bedford, Mass.
Statement signed: May 20, 1980.
Basis of claim: Used in, less valuable waste.
Rate forwarded to Regional Commissioner of Customs: New York, August 15, 1980.

(E) Company: Eli Lilly and Co.
Articles: Tricyclazole (beam/bim) in Intermediate, bulk and finished product formulations.
Merchandise: 4-methyl-2-hydrazino benzothiazole; 2-amino-4-methyl benzothiazole; and hydrazine hydrate monohydrate.
Factory: Lafayette, Ind.
Statement signed: March 13, 1980.
Basis of claim: Used in.
Rate forwarded to Regional Commissioner of Customs: Chicago, August 25, 1980.

(F) Company: Gilbert Engineering Co., Inc.
Articles: Cable connectors.
Merchandise: Aluminum bars.
Factory: Phoenix, Ariz.
Statement signed: June 25, 1980.
Basis of claim: Appearing in.
Rate forwarded to Regional Commissioner of Customs: Los Angeles, August 5, 1980.

(G) Company: The B. F. Goodrich Co.
Articles: Polyvinyl chloride, resins and compounds, polyblends, and latexes.
Merchandise: Vinyl chloride monomer.
Factories: Various factories as listed in manufacturer's statement.
Statement signed: December 13, 1979.
Basis of claim: Appearing in.
Rate forwarded to Regional Commissioner of Customs: Baltimore, August 12, 1980.
Revokes: T.D. 69–218–W.

(H) Company: Harris Corp.
Articles: Partially and fully fabricated semiconductor wafers.
Merchandise: Raw silicon wafers.
Factories: Palm Bay, Fla.: Poughkeepsie, N.Y.
Statement signed: July 8, 1980.

Basis of claim: Used in.
Rate forwarded to Regional Commissioner of Customs: San Francisco, August 14, 1980.

(I) Company: Hewlett Packard Corp.
Articles: Memory boards, analytical instruments, computers, terminals, calculators, medical instruments, and computer peripherals.
Merchandise: 16K dynamic random access memory (RAM).
Factories: Various factories as listed in manufacturer's statement.
Statement signed: July 10, 1980.
Basis of claim: Appearing in.
Rate forwarded to Regional Commissioner of Customs: San Francisco, August 12, 1980.

(J) Company: Hughes Aircraft Co.
Articles: Man-portable communications radios and spares.
Merchandise: Electronic components, modules, and subassemblies.
Factories: Fullerton, Irvine, and Newport Beach, Calif.
Statement signed: September 10, 1979.
Basis of claim: Appearing in.
Rate forwarded to Regional Commissioner of Customs: Los Angeles, August 25, 1980.

(K) Company: Charles Jacquin Et. Cie., Inc.
Articles: Bottled cordials.
Merchandise: Liquid refined sugar.
Factory: Philadelphia, Pa.
Statement signed: February 15, 1980.
Basis of claim: Appearing in.
Rate forwarded to Regional Commissioner of Customs: New York, August 25, 1980.

(L) Company: Jeep Corp.
Articles: Jeep built-up vehicles.
Merchandise: Tires.
Factory: Toledo, Ohio.
Statement Signed: February 28, 1980.
Basis of claim: Appearing in.
Rate forwarded to Regional Commissioner of Customs: Chicago, August 6, 1980.
Revokes: Unpublished authorization letter of May 21, 1980.

(M) Company: Locke Manufacturing, Inc.
Articles: Powered lawn mowers and cutting reels.

333-193 O - 80 - 2

Merchandise: Ductile iron casting (raw).
Factory: Bridgeport, Conn.
Statement signed: August 12, 1980.
Basis of claim: Appearing in.
Rate forwarded to Regional Commissioner of Customs: Boston, September 15, 1980.

(N) Company: Maybrook Inc.
Articles: Anhydrous lanolin, USP (produced from crude wool grease); Degra; lanolin wax; lanolin oil.
Merchandise: Anhydrous lanolin, USP; crude wool grease.
Factory: Lawrence, Mass.
Statement signed: December 7, 1979.
Basis of claim: Used in, with distribution to the products obtained in accordance with their relative value at the time of separation.
Rate forwarded to Regional Commissioner of Customs: New York, August 13, 1980.

(O) Company: Merck & Co., Inc.
Articles: Vitamin B_{12} feed grade.
Merchandise: Vitamin B_{12} eluate.
Factory: Elkton, Va.
Statement signed: March 21, 1980.
Basis of claim: Used in.
Rate forwarded to Regional Commissioner of Customs: New York, August 15, 1980.

(P) Company: Miller Metal Products Co.
Articles: Finished automotive, agricultural, and industrial wheels and parts.
Merchandise: Automotive, agricultural, and industrial wheels and parts.
Factory: Grand Rapids, Mich.
Statement signed: December 3, 1979.
Basis of claim: Appearing in.
Rate forwarded to Regional Commissioner of Customs: New York, August 12, 1980.

(Q) Company: Morton Norwich Products, Inc.
Articles: Color dyes.
Merchandise: Dye intermediates.
Factory: Paterson, N.J.
Statement signed: June 2, 1980.
Basis of claim: Used in.

Rate forwarded to Regional Commissioner of Customs: New York, August 4, 1980.

(R) Company: NF & M Corp.
Articles: Finished titanium bars, billets, and plates.
Merchandise: Unfinished titanium bars, billets, and plates, consisting of alloys.
Factory: Monaca, Pa.
Statement signed: March 21, 1979.
Basis of claim: Used in, less valuable waste.
Rate forwarded to Regional Commissioner of Customs: New York, August 15, 1980.

(S) Company: National Semiconductor Corp.
Articles: Partially and fully fabricated semiconductor wafers.
Merchandise: Raw silicon wafers.
Factory: Santa Clara, Calif.
Statement signed: July 7, 1980.
Basis of claim: Used in.
Rate forwarded to Regional Commissioner of Customs: San Francisco, September 3, 1980.

(T) Company: Rohm and Haas Delaware Valley Inc.
Articles: Blazer 224L and Blazer 2S.
Merchandise: Blazer Technical.
Factory: Philadelphia, Pa.
Statement signed: July 23, 1980.
Basis of claim: Used in.
Rate forwarded to Regional Commissioner of Customs: Baltimore, August 15, 1980.

(U) Company: Shugart Associates.
Articles: Disc drives.
Merchandise: Electric motors and base castings.
Factory: Sunnyvale, Calif.
Statement signed: July 1, 1980.
Basis of claim: Appearing in.
Rate forwarded to Regional Commissioner of Customs: San Francisco, August 12, 1980.

(V) Company: Sprague Electric Co.
Articles: Etched and formed aluminum capacitor foil.
Merchandise: Aluminum foil, capacitor grade, 99.96 percent pure.
Factories: Lancing, N.C.; Clinton, Tenn.

Statement signed: June 17, 1980.
Basis of claim: Used in, less valuable waste.
Rate forwarded to Regional Commissioner of Customs: Boston August 14, 1980.

(W) Company: Sun Chemical Corp.
Articles: Organic pigments.
Merchandise: Dye intermediates in various ratios.
Factories: Cincinnati, Ohio; Staten Island, N.Y.; Newark, N.J.; Muskegon, Mich.
Statement signed: July 18, 1980.
Basis of claim: Used in.
Rate forwarded to Regional Commissioner of Customs: New York, September 9, 1980.
Revokes: T.D. 79-63-X.

(X) Company: Texsun Corp.
Articles: Canned orange juice, chilled orange juice, and blended citrus juices.
Merchandise: Orange juice, frozen orange juice, and orange juice for manufacturing.
Factory: Weslaco, Tex.
Statement signed: June 27, 1980.
Basis of claim: Used in.
Rate forwarded to Regional Commissioner of Customs: Miami and Houston, September 2, 1980.

(Y) Company: Uniroyal, Inc.
Articles: Tires for passenger cars, airplanes, light heavy service trucks, heavy service trucks, agricultural, off-the-road, industrial pneumatic, industrial solid and other types and tread rubber.
Merchandise: Synthetic rubber.
Factories: Various factories as listed in manufacturer's statement.
Statement signed: June 5, 1980.
Basis of claim: Appearing in.
Rate forwarded to Regional Commissioner of Customs: New York, August 7, 1980.

(Z) Company: Westvaco Worldwide Corp.
Articles: Refined tall oil fatty acids, rosins, distilled tall oil, and related tall oil fatty acids.
Merchandise: Crude tall oil.
Factories: Charleston Heights, S.C.; De Ridder, La.
Statement signed: January 28, 1980.

Basis of claim: Used in, with distribution to the products obtained in accordance with their relative value at the time of separation.
Rate forwarded to Regional Commissioner of Customs: New York, August 15, 1980.

Approvals under section 22.6, Customs Regulations

(1) Company: Everglades Sugar Refinery, Inc.
Articles: Hard refined sugar in various forms, including powdered sugar and refined liquid sugar, some partially inverted.
Merchandise: Raw sugar of 95° polarization or above.
Factory: Clewiston, Fla.
Statement signed: December 17, 1979.
Basis of claim: Used in.
Rate issued by Regional Commissioner of Customs: Miami, March 13, 1980.

(2) Company: Savannah Foods & Industries, Inc.
Articles: Hard refined sugar in various forms, including powdered sugar; soft refined sugar; refined liquid sugar, some partially inverted, and special syrup (Leafcoat).
Merchandise: Raw sugar of 95° polarization or above.
Factory: Port Wentworth, Ga.
Statement signed: December 17, 1979.
Basis of claim: Used in.
Rate issued by Regional Commissioner of Customs: Miami, March 17, 1980.
Revokes: T.D. 50166–J, as amended by T.D. 73–89–L and T.D. 77–123(1).

(T.D. 80–281)

Reimbursable Services—Excess Cost of Preclearance Operations

DEPARTMENT OF THE TREASURY,
OFFICE OF THE COMMISSIONER OF CUSTOMS,
Washington, D.C., November 19, 1980.

Notice is hereby given that pursuant to section 24.18(d), Customs Regulations (19 CFR 24.18(d)), the biweekly reimbursable excess costs for each preclearance installation are determined to be as set forth below and will be effective with the pay period beginning November 30, 1980.

Installation	*Biweekly excess cost*
Montreal, Canada	$17, 180
Toronto, Canada	27, 811
Kindley Field, Bermuda	4, 869
Nassau, Bahama Islands	19, 522
Vancouver, Canada	12, 300
Winnipeg, Canada	1, 800
Freeport, Bahama Islands	12, 846
Calgary, Canada	6, 378
Edmonton, Canada	5, 231

JACK T. LACY,
Comptroller.

U.S. Customs Service

Proposed Rulemaking

(19 CFR Part 151)

Proposed Amendment to the Customs Regulations Relating to the Examination of Merchandise

AGENCY: U.S. Customs Service, Department of the Treasury.

ACTION: Proposed rule.

SUMMARY: This document proposes to amend the Customs Regulations to provide that at ports of entry specifically designated by the Commissioner of Customs, the District Director of Customs would be authorized to release, without examination, merchandise of a character which the District Director has determined need not be examined in every instance to insure the protection of the revenue and enforcement of Customs and other laws.

Customs has been testing a pilot automated selective examination system at several ports of entry, and the results have been encouraging. The proposed amendments would allow for servicewide use of the system to improve the effectiveness of Customs cargo inspections.

DATE: Comments must be received on or before (60 days after publication in the Federal Register).

ADDRESS: Comments may be addressed to the Commissioner of Customs, Attention: Regulations and Research Division, room 2335, U.S. Customs Service, 1301 Constitution Avenue NW., Washington, D.C. 20229.

FOR FURTHER INFORMATION CONTACT: William Morandini, Office of Inspection, U.S. Customs Service, 1301 Constitution Avenue NW., Washington, D.C. 20229; 202-566-5354.

SUPPLEMENTARY INFORMATION:

BACKGROUND

Section 499, Tariff Act of 1930, as amended (19 U.S.C. 1499), provides that not less than one package of every invoice and not less than 1 of every 10 packages of imported merchandise shall be opened

and examined. However, if the Secretary of the Treasury, from the character and description of the merchandise, is of the opinion that examination of a lesser proportion of packages will amply protect the revenue, by special regulation or instruction, the application of which may be restricted to one or more individual ports, one or more importations, or to one or more classes of merchandise, he may permit a lesser number of packages to be examined.

Section 151.2, Customs Regulations (19 CFR 151.2), implements 19 U.S.C. 1499 by providing that not less than 1 of every 10 packages of merchandise shall be examined unless a special regulation permits a lesser number of packages to be examined. Section 151.2 further provides that District Directors are authorized especially to examine less than 1 of every 10 packages, but not less than 1 package of every invoice, in the case of any merchandise imported in packages: (1) The contents and values of which are uniform, or (2) the contents of which are identical as to character although differing as to quantity and value per package.

A June 1978 General Accounting Office draft report to Congress entitled "Customs' Cargo Processing—Fewer But More Intensive Inspections Are In Order," recommended that a comprehensive cargo selective inspection system would be more efficient than Customs traditional inspection approach. To implement this recommendation, Customs has been testing a pilot automated selective examination system, the Accelerated Cargo Clearance and Entry Processing Test (ACCEPT), in several ports of entry. The results have been encouraging.

To allow for expanded use of the system on a servicewide basis to improve the effectiveness of Customs cargo inspections, it is proposed to amend paragraph (a) of section 151.2 to provide that at ports of entry specifically designated by the Commissioner of Customs, the District Director would be authorized to release, without examination, merchandise of a character which the District Director has determined need not be examined in every instance to insure protection of the revenue and enforcement of Customs and other laws.

Section 151.1, Customs Regulations (19 CFR 151.1), provides that the District Director shall examine such packages or quantities of merchandise as he deems necessary for the determination of duties and for other Customs purposes. It is proposed to amend section 151.1 to clarify that Customs officers may examine shipments to insure compliance with any other laws enforced by the Customs Service, as well as with the Customs laws. For example, imported merchandise may be examined for the Department of Agriculture, the Environmental Protection Agency, and the Department of Health, Education,

and Welfare, among other agencies to determine that it complies with the laws which are administered primarily by those agencies.

AUTHORITY

These amendments are proposed under the authority of R.S. 251, as amended (19 U.S.C. 66), and sections 499, 624, 46 Stat. 728, as amended, 759, general headnotes 11, 12, Tariff Schedules of the United States (19 U.S.C. 1202, 1499, 1624).

COMMENTS

Before adopting this proposal, consideration will be given to any written comments (preferably in triplicate) that are submitted timely to the Commissioner of Customs. Comments submitted will be available for public inspection in accordance with section 103.8(b), Customs Regulations (19 CFR 103.8(b)), during regular business hours at the Regulations and Research Division, room 2335, Headquarters, U.S. Customs Service, 1301 Constitution Avenue NW., Washington, D.C. 20229.

APPLICABILITY OF EXECUTIVE ORDER 12044

This document is subject to the Treasury Department directive published in the Federal Register on November 8, 1978 (43 F.R. 52120), implementing Executive Order 12044, "Improving Government Regulations," and was the subject of Work Plan No. 79–20, approved by the Department on July 31, 1979.

REGULATION DETERMINED TO BE NONSIGNIFICANT

In the directive implementing Executive Order 12044, the Treasury Department stated that it considers each regulation published in the Federal Register and codified in the Code of Federal Regulations to be "significant." However, regulations which are nonsubstantive, essentially procedural, and do not impose substantial additional requirements or cost on, or substantially alter the legal rights or obligations of, those affected, with Secretarial approval, may be determined not to be significant. Accordingly, it has been determined that this document does not meet the Treasury Department criteria in the directive for "significant" regulations.

DRAFTING INFORMATION

The principal author of this document was Laurie Strassberg Amster, Regulations and Research Division, U.S. Customs Service. However, personnel from other Customs offices participated in its development.

333-193 O - 80 - 3

PROPOSED AMENDMENTS

PART 151—EXAMINATION, SAMPLING, AND TESTING OF MERCHANDISE

1. It is proposed to amend section 151.1, Customs Regulations (19 CFR 151.1), to read as follows:

151.1 Merchandise to be examined.

The district director shall examine such packages or quantities of merchandise as he deems necessary for the determination of duties and for compliance with the Customs laws and any other laws enforced by the Customs Service.

2. It is proposed to amend paragraph (a) of section 151.2, Customs Regulations (19 CFR 151.2), to read as follows:

151.2 Quantities to be examined.

(a)(1) *Minimum quantities.* Not less than one package of every 10 packages of merchandise shall be examined, unless a special regulation permits a lesser number of packages to be examined. district directors are specially authorized to examine less than one package of every 10 packages, but not less than one package of every invoice, in the case of any merchandise which is:

(i) Imported in packages the contents and values of which are uniform, or

(ii) Imported in packages the contents of which are identical as to character although differing as to quantity and value per package.

(2) *Exceptions to minimum quantities.* At ports of entry specifically designated by the Commissioner of Customs, the district director is authorized to release, without examination, merchandise of a character which the district director has determined need not be examined in every instance to ensure the protection of the revenue and compliance with the Customs laws and any other laws enforced by the Customs Service.

R. E. CHASEN,
Commissioner of Customs.

Approved: November 6, 1980.

RICHARD J. DAVIS,
Assistant Secretary of the Treasury.

U.S. Customs Service

Customs Service Decisions

DEPARTMENT OF THE TREASURY,
OFFICE OF THE COMMISSIONER OF CUSTOMS,
Washington, D.C.

The following are decisions made by the U.S. Customs Service where the issues involved are of sufficient interest or importance to warrant publication in the CUSTOMS BULLETIN.

Dated: November 18, 1980.

DONALD W. LEWIS,
Director,
Office of Regulations and Rulings.

(C.S.D. 80-226)

Cost of Production/Constructed Value: Dutiability of Interest Expense Where No Interest Is Charged

Date: February 12, 1980
File: RRUCV BS
061820

Issue.—Whether the imputed cost of money in relation to a non-interest-bearing loan by a U.S. parent corporation to its foreign subsidiary is a cost item to be included in the cost of production/constructed value of merchandise imported from the foreign subsidiary.

Facts.—The parent corporation advanced moneys to its foreign subsidiary which were treated as a noninterest-bearing loan. The funds advanced by the parent were used to maintain its assembly facility. No interest expense was actually incurred by the subsidiary, nor was the parent required to borrow funds and pay interest thereon as a result of the loan.

Customs officials in New York have computed an interest cost on the basis of the rate the parent was charged by various lending institutions. This rate was applied to the intercompany loan payable account balance due the parent and an interest charge was determined.

The basis for this action was that interest expense is a necessary cost element in determining statutory value under either cost of production or constructed value bases of appraisement. (Secs. 402a(f) and 402(d), Tariff Act of 1930, as amended.)

Law and analysis.—In *Gehrig Hoban & Co., Inc.* v. *United States*, 57 Customs Court 727, A.R.D. 210 (1966), a French excise tax was imposed upon alcohol used in merchandise manufactured solely for consumption in France, whereas no tax was payable on alcohol used in merchandise manufactured for export. In holding that such tax was not part of the cost of materials under statutory cost of production, the Customs Court stated that section 402a(f) was concerned with merchandise for export to the United States and not for home consumption. And in *Stockheimer & Harder, et al.* v. *United States* (58 Cust. Ct. 801), A.R.D. 218 (1967), the issue was whether a French social security tax which was refunded upon exportation should be included under cost of production as a usual general expense. The court in that case reasoned that the tax was not an expense sustained by the manufacturer in manufacturing or producing such or similar merchandise.

These cases stand for the proposition that "*an expense not incurred in connection with the exported merchandise is not an element of cost or expense within the 'cost of production' statute*". (Italic added.) See *C. J. Tower & Sons of Buffalo, Inc.* v. *United States*, 65 Cust. Ct. 792, A.R.D. 277 (1970). (In *Tower*, the court excluded from usual general expenses under statutory cost of production certain home-market costs which were not incurred in connection with the imported merchandise.)

In addition, the cases provide further definition to the general interpretation of the cost of production statute as enunciated in the landmark case of *Ford Motor Company* v. *United States* (29 Cust. Ct. 553, A.R.D. 9 (1952)). In that case, the court stated that the purpose of the statute "is to derive, not the manufacturer's actual cost, but the *actual* cost of manufacture." (Italic added.) The principles gleaned from the cases dealing with statutory cost of production are equally applicable to statutory constructed value under the new law. (Sec. 402(d) of the act.)

Holding.—Where no interest expense is incurred in connection with a loan by a U.S. parent to its foreign subsidiary, interest expense cannot be imputed to the subsidiary for purposes of including it as a cost item under statutory cost of production or constructed value of merchandise imported from the foreign subsidiary.

(C.S.D. 80-227)

Country of Origin Marking: Exception From Marking For Semiconductor Chips Arriving in Properly Marked Containers; Substantial Transformation

Date: February 13, 1980
File: MAR-2-05-RRUEE
712193 MC

This ruling concerns the country of origin marking of integrated circuits assembled in the United States from foreign components.

Issue.—Whether assembly of integrated circuits, including attachment of the die and lead wires, encapsulation and testing, from imported semiconductor chips constitutes a substantial transformation.

Facts.—An American subsidiary of a Japanese corporation proposes to produce integrated circuit packages in the United States. Silicon semiconductor chips and other materials used in the circuit assembly process will be imported from Japan. The assembly operation in the United States will include attachment of the die, attachment of lead wires, encapsulation, and then testing and marking.

Law and analysis.—Section 304 of the Tariff Act of 1930, as amended (19 U.S.C. 1304), provides in general that all articles of foreign origin, or their containers, imported into the United States, shall be legibly and conspicuously marked to indicate the English name of the country of origin to an ultimate purchaser in the United States.

Section 134.1(b) of the Customs Regulations defines "country of origin" as "the country of manufacture, production or growth of any article of foreign origin entering the United States. Further work or material added to an article must effect a substantial transformation in order to render such other country the 'country of origin' within the meaning of this part."

Section 134.35 states that in order to effect a substantial transformation, an article used in the United States in manufacture must result "in an article having a name, character, or use differing from that of the imported article * * *. Under this principle, the manufacturer or processor in the United States who converts or combines the imported article into the different article will be considered the 'ultimate purchaser' of the imported article * * * and the article shall be excepted from marking. The outermost container of the imported articles shall be marked in accordance with this part."

In this case, semiconductor chips and other materials of no functional use in their imported state are to be assembled by a manufacturer in the United States. Several procedures will be performed by the manufacturer including attachment of the die and lead wires and then

encapsulation of the integrated circuit. The final product must then be tested and marked before being available for sale.

We are of the opinion that the procedures of attachment of the die and lead wires and encapsulation will result in a substantially transformed product. The use, character, name and value of a finished integrated circuit is substantially different from a semiconductor chip. Testing and marking only, however, are not considered to result in a substantial transformation.

Accordingly, the finished product will be considered of United States origin for purposes of 19 U.S.C. 1304, and need not be marked. As the assembler is to be considered the "ultimate purchaser" of the components, including the semiconductor chips, those imported articles need not be marked either, provided the outermost containers of the imported articles are marked "Japan," and Customs officers at the port of entry are satisfied the chips will reach the assemblers in the marked containers. The chips will be exempt from individual marking under 19 U.S.C. 1304(a)(3)(D).

Holding.—The assembler of integrated circuits from semiconductor chips and other materials effects a "substantial transformation," and is thus to be considered the "ultimate purchaser" of the imported components. Accordingly, the chips and other components may be excepted from marking pursuant to 19 U.S.C. 1304(a)(3)(D). There is no requirement under the Customs laws that the finished integrated circuits be marked to indicate the origin of the components.

(C.S.D. 80-228)

Classification: Whether Cast Hose Couplings Are "Cast Iron" for Tariff Purposes

Date: February 15, 1980
File: CLA-2:RRUCGC
061666 E

Re Decision on application for further review of protest Nos. 4101-9-000009 and 4101-9-000010

DISTRICT DIRECTOR OF CUSTOMS,
Cleveland, Ohio

DEAR SIR: This decision concerns protests filed against your decision in classifying certain cast hose couplings under the provision for articles of iron, not coated or plated with precious metal, other, in item 657.20 or 657.25, Tariff Schedules of the United States (TSUS),

dutiable at the rate of 9.5 percent ad valorem in the liquidation of the following entries:

Entry No.	Entry date	Liquidation date
104471	Oct. 24, 1975	Dec. 29, 1978
106046	Mar. 4, 1977	Dec. 22, 1978
114095	June 26, 1975	Do.
100847	July 22, 1975	Do.
101156	July 31, 1975	Do.
102911	Sept. 16, 1975	Do.
108963	Feb. 27, 1976	Do.
111790	May 13, 1976	Do.
113477	June 10, 1975	Do.
112419	May 13, 1975	Do
110721	Apr. 19, 1976	Do.

The protestant claims that the cast hose couplings should be classified under the provision for articles of malleable cast iron, in item 657.10, TSUS, with duty at the rate of 4 percent ad valorem.

The imported articles which are the subject of these protests consist of small thin-wall castings which, after machining and the addition of other parts, are used as hose couplings. The subject articles are made by casting a hard brittle white cast iron article, and then annealing it to make it malleable. During the annealing or heat treating process most of the carbon is removed from the casting so that the imported casting has a carbon content of substantially less than 1 percent.

The provisions of item 657.10, TSUS, are more specific that the provisions of item 657.20 or 657.25, TSUS. Therefore, the question presented is whether the imported merchandise is embraced by the provision for malleable cast iron articles, not coated or plated with precious metal, in item 657.10.

You did not classify the merchandise under the provisions of item 657.10, because of headnote 2(a), subpart B, part 2, schedule 6, TSUS, which provides that the term "cast iron" for the purposes of the tariff schedules means "a ferrous product containing, by weight, 1.9 percent or more of carbon, and which may contain one or more specified alloy elements within certain specified weight limits."As previously stated, the carbon content of the imported articles is less than 1 percent.

The protestant claims that the cited headnote which is in subpart B is not relevant to cast iron articles provided for in subpart G in which the carbon has been removed by subsequent heat treatment.

It has been held that if the statutory language is clear and unambiguous, there is no reason to reject its meaning and search for another. *The United States* v. *H. Rosenthal Co.*, C.A.D. 1236, decided November 15, 1979. As applied to this case, the statutory language is clear and

unambiguous that headnote 2(a), setting forth the meaning of "cast-iron," applies to that term as used in the tariff schedules which includes subpart G. This construction was followed in a previous ruling circularized as ORR Ruling 505/68. Therefore, we find no merit in the protestant's claim that the cited headnote is not relevant. Since the protestant's further claims rest upon the cited headnote not being relevant, they need not be discussed.

The protests are denied. The entries and related papers are returned.

(C.S.D. 80–229)

Export Value: Dutiability of Wharfage and Handling Charges

Date: February 19, 1980
File: CLA-2: RRUCV RP
542087

This is in reference to your letter of January 31, 1980, concerning the dutiable status of wharfage and handling charges under export value (section 402(b), Tariff Act of 1930, as amended). Specifically, you inquire whether such charges are includable in the dutiable value of certain hardboard sold for export to the United States on an f.o.b. basis.

Assuming that export value is the proper basis of appraisement for the subject merchandise, we note that section 402(b) provides:

> (b) *Export value.*—For the purposes of this section, the export value of imported merchandise shall be the price, at the time of exportation to the United States of the merchandise undergoing appraisement, at which such or similar merchandise is freely sold or, in the absence of sales, offered for sale in the principal markets of the country of exportation, in the usual wholesale quantities and in the ordinary course of trade, for exportation to the United States, plus, when not included in such price, the cost of all containers and coverings of whatever nature and all other expenses incidental to placing the merchandise in condition, packed ready for shipment to the United States.

It is well established that where merchandise is available only at an f.o.b. price, the export value includes inland freight and other charges which are part of the price. *Aceto Chemical Co., Inc.* v. *United States*, 51 CCPA 121, C.A.D. 846 (1964), *United States* v. *Paul A. Straub and Co., Inc.*, 41 CCPA 209, C.A.D. 553 (1954), *Albert Mottola* v. *United States*, 46 CCPA 17, C.A.D. (1958).

Accordingly, it is our opinion that the wharfage and handling charges which are included in the f.o.b. price you describe are a part of export value unless it can be established that the merchandise

undergoing appraisement is freely offered in wholesale quantities f.o.b. factory (ex-factory) to all purchasers for exportation to the United States.

(C.S.D. 80-230)

Country of Origin Marking: Frozen Orange Juice Concentrate of U.S. Origin Repacked in Canada

Date: February 21, 1980
File: MAR-2-05-RRUEE
712184 MC

This ruling concerns the country-of-origin marking of frozen orange juice concentrate repacked in Canada.

Issue.—Whether reference to Canada need appear on containers of frozen orange juice concentrate where the product is of United States origin but repacked in Canada.

Facts.—Frozen orange juice concentrate of domestic origin is to be packed in drums concentrated at 58° or 65° Brix and sent to Canada. In Canada the concentrate is diluted with water, repacked at 42.5° Brix and then brought back into the United States.

Law and analysis.—Section 304 of the Tariff Act of 1930, as amended (19 U.S.C. 1304) provides in general that all articles of foreign origin, or their containers, imported into the United States shall be legibly and conspicuously marked to indicate the English name of the country of origin to an ultimate purchaser in the United States.

Section 134.1, Customs Regulations, defines "country of origin" as the country of manufacture, production or growth of any article of foreign origin entering the United States. Further work or material added to an article in another country must effect a substantial transformation in order to render such country the country of origin.

In this case, frozen orange juice concentrate from the United States will be shipped to Canada where it will be diluted with water only and repacked. However, the dilution will not be of a sufficient extent to render the concentrate reconstituted. Accordingly, we are of the opinion that no substantial transformation has taken place as the frozen concentrate does not become a new and different product. Therefore, no reference to Canada on the container is mandated by Customs marking requirements.

However, section 134.21 of the Customs Regulations states that compliance with Customs marking requirements "shall not be construed as excepting any article (or its container) from the particular requirements of marking provided for in any other provision of any law, such as those of the Federal Trade Commission, Food and Drug

333-193 O - 80 - 4

Administration, and other agencies." Accordingly, the Food and Drug Administration should be contacted for further information concerning their specific requirements.

Holding.—Frozen orange juice concentrate repacked and diluted with water, but not reconstituted, in Canada, need not be marked with Canada as the country of origin.

(C.S.D. 80-231)

Instruments of International Traffic: Diversion to Point-to-Point Local Traffic; Section 10.41a(d), Customs Regulations

Date: February 22, 1980
File: BOR-7-07-RRUCDC
104379 MJN

This ruling concerns the use of foreign containers admitted as instruments of international traffic.

Issue.—Whether foreign containers admitted as instruments of international traffic are diverted to unpermitted domestic traffic when unpacked for Customs inspection at a container station, repacked with the imported merchandise which arrived therein, and delivered to the ultimate consignee.

Facts.—Foreign containers are loaded with merchandise in Hamburg, Germany, for delivery in the United States. Upon arrival, these foreign containers are admitted as instruments of international traffic and are sent to a container station for examination. After the merchandise is examined, the foreign container is reloaded with the same merchandise for delivery to the ultimate consignee.

The inquirer states that she was informed by Customs personnel that this method of unpacking and repacking of the merchandise in the foreign containers would constitute a violation of section 10.41a, Customs Regulations.

Law and analysis.—Section 10.41a, Customs Regulations provides, in part, that containers "arriving (whether loaded or empty) in use or to be used in the shipment of merchandise in international traffic are hereby designated as 'instruments of international traffic' within the meaning of section 322(a), Tariff Act of 1940, as amended * * * . Such instruments may be released without entry or the payment of duty, subject to the provisions of this section." Under section 10.41a, a container generally is considered to be engaged in international traffic when it arrives in the United States with cargo for delivery in the United States or arrives empty to lade cargo for foreign destinations.

Section 10.41a(d) provides in part that if a container released under this section "is subsequently diverted to point-to-point local traffic within the United States or is otherwise withdrawn in the United States from its use as an instrument of international traffic, it becomes subject to entry and the payment of applicable duties."

In the subject case, the container is being used to transport imported merchandise to its point of destination in the United States. Therefore, it is our opinion that the contemplated use is permissible under the regulations governing instruments of international traffic. The contemplated layover at the container station for Customs inspection would not sever the container from its use in international traffic.

Holding.—Foreign containers admitted as instruments of international traffic are not diverted to unpermitted domestic traffic when unpacked for Customs inspection at a container station, repacked with the imported merchandise which arrived therein, and delivered to the ultimate consignee in the United States.

(C.S.D. 80-232)

Country of Origin Marking: Digital Pen Watches Imported Without Proper Markings, but Allegedly for Personal Use

Date: February 25, 1980
File: ENT-1-01-RRUEE
712393 MC

This ruling concerns 50 digital pen watches, imported without the proper country of origin and watch movement markings.

Issues.—Whether a passenger's personal exemption can be amended to cover items shipped separately, after those items have been examined by Customs.

Whether a gumbacked label, to be attached to the outside of a digital pen watch would satisfy both country of origin and special watch movement marking requirements.

Facts.—The imported article consists of a pen with a digital clock movement inserted in the barrel. When the top of the pen is depressed, the movement displays the date and the time through a clear red plastic readout plate built into the side of the pen. The importation in question included fifty (50) of these time pen units. They were purchased abroad by an executive of a subsidiary corporation of the company seeking to enter the merchandise. The stated intended use of the time pens is gifts for business friends.

Upon examination, the merchandise was determined to be not legally marked in accordance with 19 U.S.C. 1304 of the Tariff Act

and schedule 7, part 2E, headnote 4 of the Tariff Schedules of the United States. The box containing the pen was, however, marked with the country of origin. A Notice of Redelivery was issued indicating that the barrel of the pen should be marked with the country of origin and the watch movement should be permanently marked as prescribed in the statute. Reconsideration was requested on the grounds that although the passenger failed to enter the pens in his personal declaration after purchasing them while traveling, for his use as gifts, he should now be able to amend the declaration so as to allow the pens to be imported as is. In the alternative, it is requested that a gumbacked label be affixed to the pen's exterior, indicating the number of jewels, the manufacturer, the country of orgin, and whether or not the movement is adjusted.

Law and analysis.—Section 148.16(b) of the Customs Regulations provides that "(u)nder no circumstances shall a passenger be permitted to add any undeclared article to his declaration after such article has been discovered by the examining officer." Whereas the pens were examined prior to any request for amendment by the passenger, they cannot be included under his personal exemption.

Even if the declaration was amended to include the pens, the statutory marking requirements for watch movements would still not be satisfied. T.D. 40547(1) of December 6, 1924 indicated the parameters of personal use by stating that only such clocks "as are intended for the personal or household use of the importer or members of his immediate family may be admitted without marking." In that case, six unmarked clocks purchased abroad for friends as presents were not permitted entry.

While we now reaffirm the principle of T.D. 40547(1), the definition of personal use will not be read as restrictively as appears in that decision. We recognize that bona fide gifts of watches or clocks, imported in small quantities, may be admitted without marking if intended for family or friends. Nevertheless, where a quantity of 50 is involved or, as appears in the present situation, a somewhat commercial use is intended, the importation will not be considered to be for personal use.

In response to the alternative marking proposal, the gumbacked label would satisfy the country of orgin marking requirements for the pen body, but not the statutory marking requirement for the watch movement. Section 134.32(a) of the Customs Regulations allows for exceptions to the country-of-orgin marking requirements for merchandise that cannot be marked. However, no authorization exists for waiver or alternative marking of statutory marking provisions such as those for watch movements.

Holding.—The personal declaration cannot be amended and the digital pen watches must be marked in accordance with schedule

7, part 2E, headnote 4, TSUS. The Notice of Redelivery was properly issued.

(C.S.D. 80-233)

Classification: Quilting Stitching on Patch Pockets as Ornamentation

Date: February 27, 1980
File: CLA-2: RR:CC:C
062972 PK

In a memorandum from the Acting Chief, Deputy Assessment Branch VII/VIII, New York Seaport Area, File CLA-2-03, S:C:DVII-711-892, dated December 3, 1979, Headquarters was requested to rule on the tariff status of garments with each of two sample pockets attached.

Facts.—Two samples of denim patch pockets have been submitted. Each sample consists of three layers, a denim outer shell, a thin manmade fiber middle batting, and an inner layer or lining of woven manmade fiber fabric.

The sample labeled (A) has no turned over edges. The fabrics are held together at their perimeters by a single row of stitching. Approximately one-third of the way down from the top edge of the pocket are five rows of straight stitching which are parallel to the pocket opening. The rows are formed by stitching similar to overhand stitching and each row measures approximately one-sixteenth inch wide. Directly below these rows of stitching is a decorative design which is formed by the same type of stitching. All the stitching goes through all three layers of fabric. The sample marked (B) has its edges turned under and stitched in place by two rows of straight stitching. The design stitched into the center of the pocket is different than in sample (A) and the stitching is all similar to lockstitch stitching. As in sample (A), all the stitching goes through all three layers of fabric. Photocopies of both pockets are attached.

Issue.—The issue presented is whether the designs formed by the stitching on each of the pockets would cause garments to which those pockets are attached to be classified as ornamented for tariff purposes.

Law and analysis.—Headnote 3(a)(i), schedule 3, TSUS, provides that yarn introduced as needlework or otherwise may constitute ornamentation for tariff purposes. Whether or not particular stitching falls within the purview of headnote 3(a)(i) depends on whether that stitching serves a primarily utilitarian, as oppose to decorative, function. *Colonial Corp. of America* v. *United States*, 62 Cust. Ct. 502, C.D. 3815 (1969).

In this connection, Headquarters ruling 059060, dated June 29, 1979, held that "any functional quilting stitching on a garment (i.e.,

stitching which actually holds two or three layers of material together, one layer of which is a batting or is similar to a batting) will not constitute ornamentation for tariff purposes." The merchandise which was the subject of that ruling consisted of garments that were made up three layers of material (a woven outer shell, a middle batting, and a woven lining) which had quilting stitching holding the outer shell and batting layers together. In reaching that decision, no thought was given to the fact that quilting stitching might be used to justify decorative designs on nonquilted garments.

While we do not have samples of the garments to which these pockets will be attached, since the pockets are of the type usually found on denim jeans, we assume that the garments will be denim jeans. We are unable to determine the benefit conferred on the wearer of such garments due to the presence of the quilted pockets, other than the decorative effect of the quilting stitching.

It is suggested that the pockets are not truly quilted because the stitching on those pockets is more ornate than necessary. In this respect, a tariff classification is not governed by how a garment could have been made. Rather, the test is whether a particular feature is, in itself, primarily decorative or primarily functional. *Blairmoor Knitwear Corp.* v. *United States*, 60 Cust. Ct. 388, C.D. 3396 (1968).

It is also suggested that the thickness of the middle batting layer in the two pockets is not sufficient for those pockets to be considered quilted. Taking this approach would place the Customs Service in the position of dictating to manufacturers minimum quality requirements for quilted garments. This is neither desirable nor, in the absence of provable industry standards supporting such a determination, legally defensible.

The wording in Headquarters ruling 059060 should be read in conjunction with the merchandise being ruled upon. Therefore, it is not controlling in this instance.

Where a garment contains quilting with decorative stitching and that quilting has little or no utilitarian value, the quilting stitching will be considered ornamentation for tariff purposes. This concept of classification is not new. The Customs Service has, on numerous occasions, ruled that features which are functional on some garments may be considered ornamentation on other garments. In this connection see C.S.D. 79–117, file 054745, dated July 5, 1978, where boys' pants were classified as ornamented due to a textile loop on those pants, even though the loop was similar to functional loops on work pants; T.D. 70–72(16), which held that a textile tab on a woman's trench coat constituted ornamentation because the plastic ring that it held served no functional purpose while similar tabs holding functional D-rings on ski jackets are not ornamentation; and C.S.D.

79–127, file 054807, dated August 16, 1978, held that triple needle stitching on women's raincoats constitutes ornamentation while similar sticthing on work garments may be considered primarily functional and not ornamentation.

Holding.—Since there appears to be no reasonably functional purpose attributable to quilted patch pockets on jeans, the decorative quilting stitching on those pockets constitutes ornamentation for tariff purposes.

(C.S.D. 80–234)

Temporary Importation Under Bond: Whether Repacking a Bulk Product Into Small Containers Constitutes Processing Under Item 864.05, TSUS

Date: February 28, 1980
File: CON-9-RRUCDB
211289 B/SMC

Issue.—Does repacking a bulk product into small containers constitute processing for purposes of item 864.05, TSUS?

Facts.—A chemical corporation plans to import certain chemicals in 14-ton demountable tanks and to repack the chemicals in drums, varying from 64 kg to 800 kg, after which the chemicals will be exported. There is no mixing of chemicals involved; rather the chemicals are simply pumped from the large tanks into the drums with very little in terms of capital and invested labor involved.

Law and analysis.—Item 864.05, Tariff Schedules of the United States, provides for the temporary free entry under bond of articles to be repaired, altered, or processed, including processes which result in articles manufactured or produced in the United States.

The Customs Service has consistently interpreted this language as contemplating more than a mere repacking of the imported merchandise itself and more than a change in the form or number of the imported containers. For example, a letter ruling dated March 12, 1962 (Bureau Letter 516.5) held that repacking a chemical does not constitute a process making the chemical eligible for entry under section 308(1), Tariff Act of 1930, as amended, the predecessor of the present law.

The instant case differs from a previous decision by this office involving the repacking of sugar from bulk containers into individualized half-ounce packets. (File 209056, August 1, 1978.) That ruling held the operation resulted in a new and different article with a different name, character, or use. The operation also was substantial in terms of capital expenditure as well as invested labor. These criteria were cited in a discussion of what constitutes a process or manufacture in 27 Op.

Attorney Gen. 68 (1908). They have also been a determining factor when there has been a question of a possible production for drawback purposes. (File 209867, January 18, 1979.)

As previously stated, the proposed operation in the case in question involves very little in terms of capital and invested labor. Also, although the exported drums may be available for consumer use, the final form is not limited to such a market as are the half-ounce sugar packets.

Holding.—The repacking of chemicals imported in demountable tanks into drums does not constitute a processing for purposes of 864.05, TSUS.

Possible alternative.—Section 81c, title 19, United States Code, provides in relevant part that foreign and domestic merchandise of every description, except where prohibited by law, may without being subject to the customs laws of the United States, be brought into a foreign trade zone and may be stored, sold, exhibited, broken up, *repacked*, assembled, distributed, sorted, graded, cleaned, mixed with foreign or domestic merchandise, or otherwise manipulated, or be manufactured. (Italic added).

The repacking operation planned by the applicant may be accomplished in a foreign trade zone without payment of duties under title 19, United States Code, section 81c.

Effect on other rulings.—Headquarters letter ruling, file 209056, August 1, 1978, distinguished.

(C.S.D. 80-235)

Entry: Fixed Structure Drilling Platform and Production Platform Affixed to the Outer Continental Shelf

Date: February 29, 1980
File: ENT-1-01-RRUEE
712131 M

This ruling concerns when Customs may accept entries for a fixed structure drilling platform and for a production platform which are to be permanently affixed to the Outer Continental Shelf.

Issue.—May Customs permit the entry of a fixed structure drilling platform and a production platform prior to these articles being permanently affixed to the Outer Continental Shelf?

Facts.—An importer plans to commence drilling and production operations for oil approximately 9 miles offshore (outside of the port of entry) on the Outer Continental Shelf. The structure consists of two major parts: (1) a fixed structure drilling platform, and (2) a production platform. The drilling platform is presently located on a barge

within the port harbor. The barge has been disconnected from a tugboat which towed it into the harbor. The importer plans in the near future to have a tugboat tow a barge carrying the production platform into the port's harbor. The importer requests permission to enter the drilling platform and, when the production platform arrives at the port of entry, the production platform, prior to these platforms being permanently attached to the Outer Continental Shelf.

The District Director of Customs at the port of entry involved will not permit the importer to enter the drilling structure because the merchandise is destined to be unladen at a location on the Continental Shelf outside the port limits. The District Director contends that the drilling platform will not be subject to the entry of merchandise requirements until it is physically attached to the Outer Continental Shelf.

The District Director states that the same reasoning would apply to the production platform if it is brought into the port's limits and the importer attempts to enter it. However, the District Director states that if the drilling platform is already attached to the Outer Continental Shelf and the production platform is towed directly from a foreign port in the vicinity of the drilling structure, the production platform is eligible for entry when it arrives within the vicinity of the drilling structure because it is arriving at a fixed location with the intent to then and there unlade.

Law and analysis.—Section 141.1(a) of the Customs Regulations provides that duties and the liability for their payment accrue upon imported merchandise by vessel when the importing vessel arrives within a Customs port with the intent to then and there unlade. Section 101.1(h), Customs Regulations, defines the date of importation for merchandise arriving by vessel as the date on which the vessel arrives within the limits of a port in the United States with the intent then and there to unlade such merchandise.

Section 141.68(e), Customs Regulations, (T.D. 79–221), provides that merchandise shall not be authorized for release, nor shall an entry or an entry summary which serves as both the entry and entry summary be considered filed or presented, until the merchandise has arrived within the port limits with the intent to unlade.

C.S.D. 79–1 provides that foreign-built drilling and production platforms which are not vessels, if permanently or temporarily attached to the seabed of the Outer Continental Shelf, would be considered imported into the Customs territory of the United States and subject to the laws and Customs regulations resulting from such importation.

43 U.S.C. 1333(a)(1), in pertinent part, provides that the Constitution and laws and civil and political jurisdiction of the United States

333-193 O - 80 - 5

are extended to the subsoil and seabed of the Outer Continental Shelf and to all artificial islands and all installations and other devices permanently or temporarily attached to the seabed which may be erected thereon for the purpose of exploring for, developing, or producing resources therefrom or any such installation or other device (other than a ship or vessel) for the purpose of transporting such resources.

We have ruled and numerous court cases have held an entry of merchandise may be made with and accepted by Customs prior to the unlading of the merchandise. In T.D. 30161, the court even stated that when merchandise manifested for a particular port was brought into that port of entry with the intent to unlade the merchandise there, the refusal of the collector of Customs (now referred to as the district director of Customs) of that port to accept the entry and the subsequent fact that the merchandise was entered at a second port of entry did not change the fact that the merchandise was imported and entitled to be entered when the vessel arrived within the limits of that first port of entry. The court further stated that the importer's offer to enter the merchandise at the manifested port of entry was tantamount to entering it and paying duty thereon and that the importer was entitled to pay duty at the lower rate which existed when he attempted to make entry at the first port. This case illustrates the fact that the acceptance of any entry should be based on the intention of the importer at the time of the filing of the entry.

Therefore, we have ruled that merchandise which is not intended to be unladen at the port of arrival (the first port of entry), but which is intended to be unladen at a second port of entry in the United States, is not considered imported merchandise when it arrives at the first port because there is no intent then and there to unlade, and a Customs entry will not be accepted.

In this case, the question arises whether the district director may accept entry for the drilling platform presently in the port and, after the arrival of the production platform, entry for the production platform while these structures are within the port limits and prior to their attachment to the Outer Continental Shelf. Since it is the intention of the importer to unlade the drilling platform and later the production platform outside of the port and affix such merchandise to the Outer Continental Shelf, and since this area will be subject to the jurisdiction of the port of entry involved, we believe that the drilling platform may be entered and, after the production platform arrives within the port limits, the production platform may likewise be entered. When the drilling platform is affixed to the Outer Continental Shelf, this area is not considered a separate Customs port of entry, but instead is considered to come under the jurisdiction of the port involved and entries of merchandise are tendered at that port.

We also note that there is a strong policy throughout Customs laws and regulations in favor of entering goods rather than having them hover or otherwise delay entry for indefinite periods of time. Section 141.5 of the Customs Regulations requires that the merchandise must be entered within 5 working days after the entry of the importing vessel, unless a longer time is authorized by law or regulation or in writing by the district director. 19 U.S.C. 1484(a) provides that the entry summary documentation must be filed within 10 days after entry. 19 U.S.C. 1490 requires the appropriate Customs officer to take merchandise into his custody after the time prescribed by law for entry where such entry is incomplete or in some way defective. 19 U.S.C. 1457 allows the appropriate Customs officer to take possession of any merchandise which remains unladen for more than 25 days after entry of the vessel to protect the revenue. This decision would be in conformity with the policy of Customs laws and regulations, as evidenced by the above examples, of favoring expeditious entry of merchandise.

If the drilling platform is permanently attached to the Outer Continental Shelf and the production platform is towed directly from the foreign port to the vicinity of the drilling platform, the production platform may be entered prior to its attachment to the drilling platform. This is because by its attachment to the Outer Continental Shelf in accordance with 43 U.S.C. 1333(a)(1) the laws of the United States (which would include Customs laws relating to the entry of merchandise) would attach to that area. Thus the production platform would be considered imported in the Customs sense since it is arriving at an area treated as part of the Customs territory of the United States with the intent to unlade and permanently affix the production platform there.

It has been suggested that C.S.D. 79–1 would preclude Customs accepting entry for the drilling or production platform when such merchandise is brought into the port limits prior to the attachment of such merchandise to the Outer Continental Shelf. We wish to point out that C.S.D. 79–1 was concerned primarily with the usual situation when merchandise is towed directly from a foreign port to be affixed to the Outer Continental Shelf. It was not intended to preclude an importer from bringing such merchandise into the port of entry and entering it there prior to its unlading and attachment to the Outer Continental Shelf.

Holding.—(1) Customs may accept entries for a fixed structure drilling platform and, after the production platform arrives at the port of entry, for a production platform when such articles are within the limits of the port of entry and prior to these articles being unladen and permanently affixed to the Outer Continental Shelf.

(2) If the fixed structure drilling platform is permanently affixed to the Outer Continental Shelf and the production platform is towed directly from a foreign port to the vicinity of the drilling platform, the production platform may be entered prior to its unlading and attachment to the Outer Continental Shelf.

(C.S.D. 80-236)

Country of Origin Marking: Electrical Conduit Couplings

Date: March 5, 1980
File: MAR-2-05-RRUEE
711343 CSB

This ruling concerns the country of origin marking requirements of electrical conduit couplings.

Issues.—Whether electrical conduit couplings are required to be individually marked to indicate their country of origin, when the importer merely attaches a coupling to each length of electrical conduit pipe that he manufactures.

Whether the importers of the above electrical conduit couplings would be considered the ultimate purchasers pursuant to section 304 of the Tariff Act of 1930, as amended (19 U.S.C. 1304).

Facts.—The electrical conduit couplings are imported from Korea in various sizes ranging from ½ inch to 6 inches in diameter.

The individual couplings are packaged in bulk in resale cartons that are clearly marked "Made in Korea." The couplings are sold to two industrial concerns, neither of which sell the couplings in their imported condition. Both companies attach, by screwing, a single coupling to one end of a standard length of electrical conduit manufactured and sold by these companies.

Law and analysis.—Section 304 of the Tariff Act of 1930, as amended (19 U.S.C. 1304), requires that every article of foreign origin (or its container) imported into the United States shall be marked in a legible and conspicuous manner to indicate the English name of the country of origin to the ultimate purchaser in the United States.

The ultimate purchaser of an imported article is defined in section 134.1(d) of the Customs Regulations as the last person in the United States who will receive the article in the form in which it was imported.

Section 134.35 of the regulations provides that an article substantially changed by manufacture which results in an article having a name, character, or use differing from that of the imported article will be within the principle of the decision of the case of *United States* v. *Gibson-Tomsen Co., Inc.*, 27 C.C.P.A. 267 (C.A.D. 98). Under this principle, the manufacturer or processor in the United States who

converts or combines the imported article into the different article will be considered the ultimate purchaser of the imported article within the contemplation of section 304(a), Tariff Act of 1930, as amended (19 U.S.C. 1304(a)), and the article may be excepted from marking. The outermost containers of the imported articles shall be marked in accordance with 19 U.S.C. 1304 (a)(3)(D).

Pursuant to section 134.1(d)(2) of the Customs Regulations, if the manufacturing process is merely a minor one which leaves the identity of the imported article intact, the consumer or user of the article, who obtains the article after the processing, will be regarded as the ultimate purchaser.

In this case the couplings themselves do not undergo any manufacturing processes. They are merely attached to one end of a length of conduit, since this is apparently the usual way in which the conduit is sold. In some cases an imported component may represent such a minor part of the complete article to which it is attached that it will lose its separate identity as an article of commerce, even though not subjected to any manufacturing processes. In such case the person using the component in this way will be considered the ultimate purchaser of the component, for purposes of 19 U.S.C. 1304. In the present case, however, the coupling is a significant part of the combined pipe and coupling, and is not considered to lose its separate identity when attached to the length of conduit.

Holding.—For purposes of 19 U.S.C. 1304(a), the user of the combined conduit and couplings is deemed to be the ultimate purchaser of the electrical conduit couplings. Accordingly, the couplings are required to be individually marked to indicate the country of origin to these purchasers.

(C.S.D. 80-237)

Country of Orgin Marking: Falsely Marked Articles in Properly Marked Containers

Date: March 7, 1980
File: MAR-2-03-RRUEE
712419 MC

This ruling concerns the country of origin marking of imported stainless steel cutlery, to be silver plated in the United States.

Issue.—Whether stainless steel cutlery may be imported bearing the marking ' (name) Stainless Silverplate/West Germany," where the merchandise is to be shipped in containers marked "Stainless Steel Cutlery/West Germany" to a United States manufacturer for the purposes of polishing, silver plating, and packaging.

Facts.—Stainless steel cutlery is to be imported from West Germany by a United States manufacturing company for the purposes of

polishing, silver plating, and packaging the merchandise in its plant and subsequently selling the then silver-plated cutlery. The merchandise itself would be marked "(name) Stainless Silverplate/West Germany" when imported, but shipped to the United States manufacturer in containers marked "Stainless Steel Cutlery/West Germany."

Law and analysis.—Section 304 of the Tariff Act of 1930, as amended (19 U.S.C. 1304), provides in general that all articles of foreign origin imported into the United States must be legibly and conspicuously marked to indicate the country of origin to an ultimate purchaser in the United States, with certain exceptions. 19 U.S.C. 1304(a)(3)(D), authorizes an exception from individual marking if the marking of the container in which the article is imported will reasonably indicate the country of origin of the article to the ultimate purchaser.

Section 134.1(d)(1) of the Customs Regulations indicates that if an imported article will be used in manufacture, the manufacturer may be the ultimate purchaser if he subjects the imported article to a process which results in a substantial transformation of the article, even though the process may not result in a new or different article.

In the present situation, the imported article, stainless steel cutlery, is subjected to a process of silver plating. In view of the high cost of silver plating with respect to the material being plated, the Customs Service is of the opinion that this process results in a substantial change to the stainless steel flatware and cannot be considered merely a minor process. While the cutlery remains cutlery after the plating process, its chief value and distinctive character derives from the silver plating rather than its use simply as flatware.

Whereas the ultimate purchaser of the imported cutlery is the United States manufacturer who effects the substantial transformation, the country-of-orgin marking requirement would be satisfied if only the containers in which the cutlery is imported are marked with the country of origin. Under such circumstances, Customs officers at the port of entry may require written assurances that such containers will reach the ultimate purchaser unopened and that the articles will not be sold or distributed or used in their imported condition other than in the silver-plating process.

Although the marking of the containers "Stainless Steel Cutlery/West Germany" satisfies Customs marking requirements for purposes of section 134.1 of the regulations, an additional problem is posed by the fact that the designation "(name) Stainless Silverplate/West Germany" appears on the individual articles as imported, and will remain on the cutlery when sold to later purchasers after being silver plated in the United States.

Section 11.13(a) of the Customs Regulations prohibits the importation of articles bearing false designations of origin, or false descriptions or representations, including words or other symbols tending falsely to describe or represent the articles. The false representation present here is that "(name) Stainless Silverplate/West Germany" connotes that the silver plating was conducted in West Germany. Thus, although the ultimate purchaser of the imported cutlery receives his merchandise in correctly marked containers, the subsequent ultimate purchaser of the articles substantially transformed in the United States would be misled by the designation remaining on the articles.

Under these circumstances, the articles as presently marked are prohibited importations under section 11.13(a). In order to benefit from the exception provided under section 134.1 and comply with Customs making requirements, the articles should be imported either without any individual marking at all or else the words "West Germany" must be obliterated. The only alternative by which "West Germany" can appear on the imported articles is if a designation "Made in West Germany, Silver Plated in the United States" or similar words appeared on the cutlery.

Holding.—Stainless steel cutlery imported by a United States manufacturer for silver plating may be exempt from individual marking if their containers are clearly marked "Stainless Steel Cutlery/West Germany." However, the articles themselves cannot be marked "Silverplate/West Germany" if the process of silver plating is to be conducted in the United States. Either the individual articles bear no marking, no reference to West Germany, or clear references to the fact that while the cutlery is of West German origin, the silver plating was done domestically.

(C.S.D. 80-238)

Value: Foreign Inland Freight Charges as Part of Transaction Value

Date: March 14, 1980
File: CLA-2:RRUCV TLL
542101
TAA No. 1

This is in reply to your letter dated February 28, 1980, discussing your understanding of how the U.S. Customs Service will value foreign inland freight under the Trade Agreements Act of 1979.

We agree with your statement that if the price paid or payable for the imported merchandise does not include foreign inland freight charges (an ex-factory price), the foreign inland freight would not

be added to the price to arrive at transaction value because the law specifies five items that may be added, and foreign inland freight is not so specified.

However, with regard to the situation when the price paid or payable includes foreign inland freight charges (an f.o.b. delivered price), section 402(b)(4)(A) of the act provides in relevant part:

> "(A) The term 'price actually paid or payable' means the total payment (whether direct or indirect, and exclusive of any costs, charges, or expenses incurred for transportation, insurance and related services incident to the international shipment of the merchandise from the country of exportation to the place of importation in the United States) * * *."

We see no authority under this section of the Trade Agreements Act of 1979 to make the deductions to the price actually paid or payable which you are referring to. Therefore, in those situations where the price actually paid or payable for imported merchandise includes foreign inland freight, such charges will be part of transaction value to the extent they are included in the price actually paid or payable.

Also, we know of no provision in the law or statement of administrative action which requires that the component parts of transaction value and computed value are to be the same.

(C.S.D. 80-239)

Vessel Control: Operation of U.S.-Built, Foreign-Registered Dredge and Support Vessels in U.S. Waters

Date: March 17, 1980
File: VES-10-02-RRUCDC
104460 JL

This ruling concerns the proposed operation of a U.S.-built, foreign-registered dredge and certain other foreign-owned and registered vessels in U.S. waters.

Issues.—1. May foreign-registered vessels engage in the activities described below without violating any laws administered by the U.S. Customs Service?

2. Will the documentation of a foreign-built dredge as a U.S. vessel give rise to the imposition of Customs duty?

3. Is the activity of dredging an engagement in coastwise trade?

4. Is sand and gravel dredged from the ocean floor and utilized for the purpose of constructing a manmade is land on which will be erected drilling platforms considered merchandise within the meaning of 46 U.S.C. 883?

Facts.—An oil company is contemplating the construction of islands in U.S. territorial waters in Prudhoe Bay, Alaska, which will serve as drilling platforms. The islands will be constructed from sand and gravel dredged from the ocean floor. It is contemplated that 16 vessels will be utilized which are all foreign-registered and, with the exception of the dredge, are foreign-built. It is stated that the dredge has had pontoons added to it in a foreign country and inquiry has been made of the U.S. Coast Guard as to whether that modification does or does not render the dredge foreign-built within the meaning of 46 U.S.C. 292. The applicant states that it is willing to transfer title to the dredge to an American corporation and document it as a U.S. vessel.

The vessels and the activities contemplated are described below:

1. *Dredge.*—The dredge will be set up in Prudhoe Bay, Alaska, to dredge sand and gravel from the ocean floor. It will not be moved except as an incident to the dredging operations and will not transport the dredged material.

2. *Transfer scow.*—The vessel will be used as a work platform, receiving the sand and gravel from the dredge through the medium of a pipeline apparatus. The transfer scow will then dump the sand and gravel into the dump scows.

3. *Dump scows (5).*—These vessels will receive the sand and gravel from the transfer scow and then will transport it to the construction sites, as far as 15 miles in one instance.

4. *Tugboats (6).*—These vessels will be utilized to pull the dump scows from the dredging sites to the construction sites where the sand and gravel will be dumped.

5. *Tugboat (1).*—This vessel will be utilized as a dredge tender.

6. *Flat barge.*—This vessel will store the fuel oil which is to be used by the tugboats.

7. *Spud barge.*—This vessel will be used as a stationary work platform. It is equipped with a crane and clam bucket which will be utilized to move the sand and gravel into place for construction of the islands.

Law and analysis.—46 U.S.C. 292 provides as follows:

> A foreign-built dredge shall not, under penalty of forfeiture, engage in dredging in the United States unless documented as a vessel of the United States.

46 U.S.C. 289 provides as follows:

> No foreign vessel shall transport passengers between ports or places in the United States, either directly or by way of a foreign port, under a penalty of $200 for each passenger so transported and landed.

Section 4.50(b), Customs Regulations, defines a passenger as "any person carried on a vessel who is not connected with the operation of such vessel, her navigation, ownership or business."

46 U.S.C. 316(a), prohibits a foreign-registered vessel from, among other things, towing any vessel other than a vessel of foreign registry

333-193 O - 80 - 6

from any port or place embraced within the coastwise laws to any other such port or place (including points within a harbor).

46 U.S.C. 883, provides, among other things, that no unqualified vessel shall transport merchandise between points and places within the United States (including points within a harbor).

Headquarters case No. 104335, dated November 9, 1979, held that a foreign-flag storage vessel which remains stationary so that it is a mere conduit for the transfer of merchandise from one vessel to another will not be in violation of 46 U.S.C. 883.

In Headquarters case No. 102782/102717, dated April 26, 1977, it was held that if dredged material has apparent value and would be used commercially or in trade, including use in a landfill, the transportation of such material between points in the United States embraced within the coastwise laws must be effected by a vessel entitled to engage in the coastwise trade. In that case, the argument was advanced that the dredged material had no value because the owner of the landfill site extracted a payment for its deposit thereon. It was held that where dredged material would be used as landfill it would have value to the owner of the landfill site, regardless of whether the party disposing of it had to pay that owner.

Headquarters letter of April 30, 1968, file MS 212.01, held that the prohibition contained in 46 U.S.C. 292, relates to build, not registry, and a dredge under foreign registry may be used for dredging in United States waters if she was built in the United States.

1. Concerning the dredge, the Customs Service defers to the Coast Guard in determining whether or not an American-built dredge which is thereafter modified in a foreign country is foreign built within the meaning of 46 U.S.C. 292. Should the Coast Guard determine that the vessel in question has not lost its status as American-built by virtue of the addition of the pontoons in Canada, the vessel will not be precluded from engaging in the proposed operations, notwithstanding that it is of foreign registry. However, should the Coast Guard instead determine that the vessel is now foreign built within the meaning of section 292, it will be precluded from engaging in dredging operations in U.S. waters even if it were possible to document the vessel under U.S. law. This is so because the historical background and the legislative history of the act of May 28, 1906, show clearly "unless documented as a vessel of the United States" refers only to the vessels named in section 2 of that act and that it was the intent of the Congress to bar all other foreign-built dredges from dredging in the United States. In 1906 there were several foreign-built dredges in operation in the harbor at Galveston. In order to avoid an inequity to the parties of the contract for dredging in Galveston, Congress, by section 2 of the act, authorized and directed the Commissioner of Navigation to document as vessels

of the United States those several foreign-built dredges. Section 2 was omitted from the codification of the act. Therefore, it has been the position of the Customs Service and of the Bureau of Marine Inspection and Navigation, its predecessor agency in the administration of navigation laws, that a foreign-built dredge may not be documented to engage in dredging in the United States (except for the dredges named in section 2 of the act of May 28, 1906) notwithstanding the words "unless documented as a vessel of the United States." Although the responsibility for the administration of the vessel documentation statutes was transferred to the U.S. Coast Guard in 1967, it remains the position of the Customs Service, which retained responsibility for the administration of section 292, that foreign-built dredges may not engage in dredging in the United States, whether or not documented as a vessel of the United States.

General headnote 5(e), Tariff Schedules of the United States, provides that vessels which are not "yachts or pleasure boats" within the purview of subpart D, part 6, of schedule 6, are not articles subject to the provisions of the tariff schedules. Since the subject dredge is not a yacht or pleasure boat, it would not be dutiable upon its entry into the United States for the purposes described, including documentation as a vessel of the United States.

2. The transfer scow planned to be used merely as a work platform will not be utilized to transport sand and gravel and, therefore, may be used, as described, without violating section 883.

3. Should the subject dredge be considered American-built by the Coast Guard, the question then presented is whether the dredged material, sand and gravel, is considered merchandise within the meaning of 46 U.S.C. 883. The dredged material in this case will be utilized to build artificial islands and the Customs Service therefore considers it to have commercial value as landfill, pursuant to case No. 102782/102717 cited above. Consequently, vessels which transport the material must be coastwise-qualified in order to avoid the penalties provided in section 883. The foreign-registered dump scows, if used to transport the dredged material from the transfer scow to the construction sites, would therefore be in violation of section 883.

4. The six foreign-registered tugboats which will be utilized to pull the dump scows between the dredge sites and the construction sites will not violate 46 U.S.C. 316(a), since the vessels to be towed will be foreign-registered.

5. Regarding the tugboat which is to be used as a dredge tender, we note that a tender is commonly taken to be a small vessel or craft employed to attend a larger one, taking ashore or bringing aboard passengers, goods, stores, and so on. Because the tug is foreign-registered, it is prohibited from transporting passengers or merchandise between

points embraced within the coastwise laws (including points within a harbor).

Personnel who are members of the dredge's crew or who are engaged in work on the dredge would be considered passengers pursuant to section 4.50(b), Customs Regulations, and cannot be transported between the dredge and any other coastwise points by the tug without violating 46 U.S.C. 289. Further, transportation of supplies, tools, and other articles to be utilized on the dredge by the tug cannot be effected without violating 46 U.S.C. 883.

6. As noted above, a foreign vessel which is used merely for storage will not be considered to have transported merchandise or passengers within the meaning of the coastwise laws. Inasmuch as it is stated that the flat barge will merely store bunkers for the tugboats, no violation is apparent. However, if the bunkers were laden on the barge at one coastwise point and the barge is towed to another coastwise point where the bunkers are unladen, then a violation of section 883 will have occurred. The barge could, of course, be towed from one point to another embraced within the coastwise laws if it were free of merchandise during the period of its movement.

7. The spud barge will be used as a stationary work platform to position sand and gravel into place after it is dumped by the dump scows. Under the facts presented it will not transport merchandise nor will it be engaged in dredging. Therefore, we know of no law administered by this agency that would be violated by the utilization of the spud barge in the manner described.

Holdings.—1. If the dredge is held to be foreign-built within the meaning of 46 U.S.C. 292 by the U.S. Coast Guard, it is prohibited from engaging in dredging operations in U.S. waters even if it were documented as a vessel of the United States.

2. The change in documentation of a foreign-registered dredge to that of a vessel of the United States will not give rise to the imposition of duty, pursuant to general headnote 5(e), Tariff Schedules of the United States.

3. A foreign-registered transfer scow may be used as a stationary work platform without violating the coastwise laws.

4. Foreign-registered dump scows which receive sand and gravel dredged in U.S. waters and which are to be used to transport that merchandise to another site in U.S. waters where it is dumped to be used to construct artificial islands for drilling platforms will be in violation of 46 U.S.C. 883 because the dredged material is considered to have commercial value as landfill.

5. A foreign-registered tugboat which is utilized as a dredge tender transporting merchandise and workmen between one coastwise point and another coastwise point is in violation of 46 U.S.C. 883 and 289.

6. Foreign-registered tugboats may be utilized to tow foreign-registered barges between points in U.S. waters without violating 46 U.S.C. 316(a).

7. A foreign-registered barge which is used merely to store fuel oil for tugboats is not in violation of the coastwise laws, provided it is not used to transport the oil.

8. A foreign-registered spud barge which is used as a stationary work platform to position sand and gravel into place after it is dumped by dump scows does not violate any law administered by the U.S. Customs Service.

(C.S.D. 80-240)

Classification: Tire Protection Chains with "Essentially Round" Links; Determination of Diameter

Date: March 20, 1980
File: CLA-2:RRUCGC
064173 E

We have considered your letter of December 21, 1979 (RUD/012) inquiring as to the tariff status of certain tire protection chains manufactured by (name of manufacturer), West Germany, as per samples submitted.

One of the samples submitted illustrates the production of the links and the other sample is a link of the tire protection chain. Since merchandise is classified in its condition as imported, it is only necessary to consider the sample link of the tire protection chain. This sample is doughnut-shaped with a flattened inner surface. It was cut in half resulting in two half-circular portions. The shape of the cross section of these half circular portions is more of "D" rather than a circle.

It is your position that this chain should be classified under the provision for "chain or chains * * * the links of which are of stock essentially round in cross section, and parts thereof, in items 652.24 through 652.33, TSUS, according to their diameter. You failed to be specific as to the diameter of the cross section of the link which you submitted.

The sample link you submitted, having a cross section in the genaler shape of a "D," was found to have a shorter diameter of 0.53 inch, a longer diameter of 0.69 inch, and an average diameter of 0.61 inch. Its diameter, determined on the basis of circumference divided by pi, is 0.676 inch. While in the instant case all the diameters measure ⅝ inch or more but under ¾ inch, which would result in classification under item 652.30, the question posed is whether a link having a cross section of several diameters is essentially round, and if so, what

is the determining diameter. Should one diameter be embraced by one line item and another diameter be embraced by another line item.

The language, "the links of which are of stock essentially round in cross section" first appeared in the tariff schedules of the United States by reason of the Tariff Schedules Technical Amendments Act of 1965. Senate Report No. 530, 89th Congress, on that act discloses that the intent of this language was as follows:

> SECTION 42. CHAIN.—This section clarifies the treatment of chain and chains to make certain that flat chains of iron or steel are provided for (at a rate of 19 percent) and that the customs practice of classifying certain chain on the basis of the diameter of the link stock which is essentially round in cross section will be continued. No rate change is involved.

Under the Tariff Act of 1930, provision was made for chain and chains in three categories, namely: (1) Those of iron or steel according to diameter, (2) those of iron or steel used for the transmission of power, and (3) anchor or stud link chain according to diameter. In the first category with which we are here concerned, the caption on C.I.E. 1279/56 indicates that chains having a diameter in the ordinary concept of that term were embraced within that category, and that such chain, composed of flat links stamped from sheet or strip metal were excluded. At the time of C.I.E. 1279/56, the United States Customs Court had just rendered a decision on certain roller chain holding it to be classifiable under the provision for chain and chains of all kinds, made of iron or steel: * * * less than five-sixteenths of one inch in diameter, and not under the provision for chains of iron or steel, used for the transmission of power, according to pitch. In the course of its decision the court stated that Congress must have used the word "Diameter" in a broad sense as applying to the material of which the chains were made, whether round, flat, or of other shapes.

That case was appealed, and in a decision published as C.A.D. 636 (1957), the appellate court stated that without evidence as to how roller chain was treated under the Tariff Act of 1883, there was no substantial support that roller chains must have been considered to have diameters, and that the prior tariff acts providing for chain cited by the Customs Court did not support its conclusion that "Congress must have used the word 'Diameter' in a broad sense as applying to the material of which chains were made, whether round, flat, or of other shapes."

The ordinary concept of the term diameter as reflected by the definition of that term in Webster's New World Dictionary of the American Language, is as follows:

> diameter 1. a straight line passing through the center of a circle sphere, etc., from one side to the other; 2. the length of such a

line; width or thickness of a circular, or somewhat circular, figure or object.

In view of the foregoing, the language "essentially round" was intended to reflect a chain composed of links having a circular or somewhat circular cross-section and by no means to include flat links. Nor do we believe that it was the intent, by the amendment in the Tariff Schedules Technical Amendments Act of 1965, to limit iron or steel chain provided by diameters to those composed of links having a cross section with only a uniform diameter. To do so would be in conflict with the position of the Government in *Grizzly Corporation* v. *United States*, 70 Cust. Ct. 251, C.D. 4460 (1973), wherein the Government argued that *C. J. Tower & Sons* v. *United States*, 48 Treas. Dec. 220, T.D. 41118 (1925), stood for the proposition that chain can be composed of links of varying sizes and still be classified and considered chain.

Under the circumstances, we are satisfied that the "D"-shaped cross section is somewhat circular and within the provision for chain according to its diameter. The sample chain has all of its diameters of ⅜ inch or more but under ¾ inch in diameter, and therefore, is classifiable under item 652.30, TSUS. Should a similar chain have diameters provided for in different line items, such chain would be classifiable under the provision for other iron or steel chain in item 652.35, TSUS.

(C.S.D. 80-241)

Classification: Stationary Diesel Engines and Parts Used For Agricultural Purposes

Date: March 20, 1980
File: CLA-2:RRUCGC
064880 E

We have considered your letter of February 1, 1980, further in regard to the tariff status of certain stationary diesel engines, models 213 (32 hp), 320 (53 hp), and 426 (72 hp), and parts thereof, products of Japan. You state that their primary use is in irrigation (to drive pumps), and their secondary use is as replacement engines for agricultural tractors and implements.

In requesting that you resubmit your request after the first of the year, we had in mind the changes represented by items 870.40 and 870.45, TSUS, copy enclosed. Pertinent to the construction of these items is headnote 1, schedule 8, and headnote 2, part 7, schedule 8, respectively, as follows:

1. The provisions of this schedule are not subject to the rule of relative specificity in headnote 10(c) of the General Head-

notes and Rules of Interpretation, and except as provided in headnote 3 to part 1 of this schedule, any article which is described in any provision in this schedule is classifiable in said provision if the conditions and requirements thereof and of any applicable regulations are met.

2. The provisions of items 870.40 and 870.45 do not apply to:

(i) articles of textile materials; articles provided for in schedule 5; articles of leather or of fur on the skin;

(ii) articles provided for in schedule 6, part 2, part 3 (subparts A through F except items 652.13 through 652.38, inclusive, 652.84, 652.88, 653.00, and 653.01), part 5 (except item 688.40), or part 6, but interchangeable agricultural and horticultural implements are classifiable in item 870.40 even if mounted at the time of importation on a tractor provided for in part 6B of schedule 6;

(iii) ball or roller bearings, including such bearings with integral shafts, and parts thereof, provided for in items 680.33 through 680.35, inclusive; or

(iv) articles provided for in item 666.00.

Internal combustion engines are provided for in schedule 6, part 4, subpart A. They are, therefore, not excluded from the provisions of item 870.40 by virtue of headnote 2, part 7, schedule 8. Since internal combustion engines are machinery, it appears they would be within the provisions of item 870.40, TSUS, provided they are imported to be used for agricultural purposes, and there is compliance with the applicable Customs Regulations, sections 10.131 through 10.139, copy enclosed.

With respect to parts of internal combustion engines, the situation is different. The parts must be imported to be used in articles provided for in item 666.00, TSUS. The articles, internal combustion engines, are not provided for in item 666.00 but items 660.40 or 660.42. Therefore, the provisions of item 870.45, TSUS, relative to parts of internal combustion engines are not applicable, and they would have to be classified and assessed with duty according to the facts.

(C.S.D. 80-242)

Conditionally Free Merchandise: Aircraft Subassemblies and Parts; Certification Requirement Under Civil Aircraft Agreement

Date: March 28, 1980
File: ENT-1-01 RRUEE
712568 BM

This ruling concerns the importation of subassemblies and parts for civil aircraft under the Civil Aircraft Agreement (Title VI of Public Law 96-39).

Issue.—Do aircraft subassemblies and aircraft parts, which have not been tested by an airworthiness authority, imported from Canada for assembly in the United States as a "knockdown" aircraft, which will be assembled in Japan, meet the certification requirements of the Civil Aircraft Agreement, if the aircraft model involved has been approved by the Federal Aviation Administration (FAA)?

Facts.—An American aircraft manufacturer has a commercial contract with the Japanese Government whereby the latter will be furnished with four "knockdown" civil aircraft so as to allow the Japanese to learn to construct the aircraft from its component parts. Certain of the subassemblies and parts for these aircraft are manufactured in Canada and are imported into the United States to the American aircraft manufacturer for assembly.

The American manufacturer notes that while the subassemblies manufactured in Canada have not been examined by an airworthiness authority, the model aircraft involved has been approved by the Federal Aviation Administration.

Law and analysis.—Section 601 of Public Law 96–39, in pertinent part, provides that aircraft parts certified for use in civil aircraft and qualified under one of the listed item numbers of the tariff schedules may be imported free of duty. The term "certified for use" means that the importer shall file a written statement, accompanied by such supporting documentation as the Secretary of the Treasurer may require, with the appropriate Customs officer stating that the imported article has been imported for use in civil aircraft, that it will be so used, and that the article has been approved for such use by the FAA or appropriate airworthiness authority in the country of exportation, if such approval is recognized by the FAA as an acceptable substitute for FAA certification, or that an application for approval for such use has been submitted to, and accepted by the FAA.

It is our understanding that when a certain model aircraft is FAA-approved for airworthiness or for test flying, the type of aircraft parts used in that aircraft are so listed and form part of that approval. It is not necessary that each and every aircraft or part of an aircraft of that model be examined by the FAA. The fact that such model aircraft has received approval by the FAA is sufficient. The subassemblies would contain parts, the models of which were FAA-approved for use in the particular model aircraft to be finally assembled in Japan. Therefore, we believe that the American manufacturer should certify that the subassemblies and parts are imported for use in civil aircraft, will be so used and have approval from the FAA. We have recently ruled that the final assembly may be done in a foreign country, rather than the United States.

Holding.—The fact that the aircraft subassemblies and aircraft parts were not examined by an airworthiness authority would not

preclude them from being certified under the Civil Aircraft Agreement, since the aircraft model involved had been approved by the FAA.

(C.S.D. 80-243)

Generalized System of Preferences: Cost of Materials Used in Manufacturing Process as Direct Costs of Processing Operations

Date: March 31, 1980
File: CLA-2:RRUCV BS
542092

This is in reference to your letter dated February 12, 1980, in which you requested a ruling with regard to the eligibility of certain articles for duty-free treatment under the Generalized System of Preferences (GSP).

In our ruling of August 20, 1979, copy enclosed, we held the following:

> 1. The electroplating process by which the metals contained in nickel chloride, potassium gold cyanide, and nickel anodes are plated out as free metals in a GSP-eligible article does not result in substantially transformed constituent materials within the law and regulations of the GSP;
> 2. The costs of the hydrochloric acid, potassium citrate, and platinum-clad titanium anodes which are consumed during the electroplating of an eligible article are direct costs of processing operations within the law and regulations of the GSP.

You now advise that part of the operation, previously performed by the exporting manufacturer, will be subcontracted to an independent producer also located in the beneficiary developing country (BDC). The subcontractor will be required to purchase and import the nickel chloride, potassium gold cyanide, and nickel anodes.

In your opinion, this change should justify a different decision than contained in our prior ruling, for the reason that when the electroplating is performed by a subcontractor, the full price charged should be considered a direct cost of processing operations of the exporting manufacturer. You believe that these materials should be treated similarly to assists, since we have held in prior rulings that there is no beneficiary developing country of origin requirement for dies, molds, tooling, etc., which are furnished free of charge (or at a reduced value) to the manufacturer.

Under section 10.178(a), Customs Regulations, the "direct costs of processing operations" means those costs either directly incurred in, or which can be reasonably allocated to, the growth, production, manufacture, or assembly of the specific merchandise under considera-

tion. Included among these costs are dies, molds, tooling, and depreciation on machinery and equipment which are allocable to the specific merchandise.

We have previously held that if an assist is otherwise a direct cost of processing operations, it is not required that the cost of such item be incurred within the BDC. However, assists in the form of materials, unless consumed in the manufacturing process, are part of the manufactured article, and therefore, are not direct costs of processing operations. The eligibility of these materials for use in determining whether the 35-percent requirement is satisfied depends on whether the BDC is the country of production. In this regard, it makes no difference whether the materials were furnished at less than full value. Furthermore, we find no difference whether the work is subcontracted to an independent producer in the BDC, or performed by the primary manufacturer.

Under the circumstances, we find that whether the electroplating process is performed by the independent contractor or the primary manufacturer, the cost or value of the potassium gold cyanide, nickel chloride, and nickel anodes is not a direct cost of processing operations performed in the BDC. On the other hand, the materials that are consumed in the electroplating process are direct costs of processing operations.

(C.S.D. 80-244)

Classification: Piano/Violin Imported in Deteriorated Condition; Musical Instrument

Date: April 8, 1980
File: CLA-2:RRUCGC
064284 JCH

This decision concerns the tariff classification of a reproducing piano-violin combination.

Issue.—Whether the article in question is classifiable under the provision for musical instruments, other than standard instruments classifiable elsewhere, in item 725.52, Tariff Schedules of the United States (TSUS), and dutiable under the current column 1 rate of 8.1 percent ad valorem, or, as contended by the ruling applicant, under the provision for waste and scrap, not specially provided for, in item 793.00, TSUS, for which duty-free entry is authorized under column 1.

Facts.—The instrument in question bears the trade name Phonoliszt-Violina, is a product developed shortly after the turn of the century by Ludwig Hupfeld of Leipzig, one of the earliest manufacturers of reproducing pianos, and is probably built around a piano manufactured by the company founded by Carl Ronisch, also of Leipzig. It is

basically a player piano with a compartment on top containing three violins which produce music by revolving within a circular bow which vibrates only one string on each instrument. A circular mechanical finger device produces the necessary intervals, vibrato, etc. The operating mechanism is of the pneumatic type.

The instrument has been collecting dust for many years in an inn in the French Alps and would be imported for restoration and preservation purposes.

Law and analysis.—It is contended that the instrument in question should be classifiable as waste or scrap because it is in such a state of deterioration that it cannot be used for the purposes for which it was designed. A 1916 decision is relied on as a pertinent precedent for this position. *Protest of Pierson Schade Forwarding Co.*, 30 T.D. 1069, Abs. 39883. The merchandise which was the subject of that decision was an old organ which had been left out in a shed for 3 years and which a Canadian owner traded in on a new organ. It was classified under a former tariff provision covering old junk.

Legislative history is also cited for the purpose of showing that articles which would have been classified in the past as old junk should now be classified as waste or scrap. Further, *Central Vermont Railway Co.* v. *United States*, 10 Ct. Cust. App. 31, T.D. 38260 (1920), was cited for the proposition that a musical instrument must be capable of producing music in its condition as imported, and *United States* v. *Borgfeldt & Co.*, 13 Ct. Cust. App. 620, T.D. 41461 (1926), was cited for the proposition that a provision for waste includes worn-out manufactured articles as well as residue from industrial processes.

If it is conceivable that a single article which someone would take the trouble to import was in such a state of deterioration at the time of importation that it would be regarded as waste or scrap, it would seem that that condition would best be established by actual Customs inspection at the time of importation. The mere assertion that the merchandise is deteriorated for the purpose of an advance classification is vague. There could be a vast difference between an old organ subjected to the abuse of the dampness and other Canadian climatic rigors in a shed and an old instrument which is basically a piano sheltered in the more benign environment of an inn. Depending upon many factors, 60 or 70 years of deterioration of a piano could involve major renovation for restoration to a playable condition to merely tuning, cleaning, and adjustments to compensate for wear. While the reproducing mechanism contains more parts and materials, such as rubber and textiles, more susceptible to deterioration than the basic parts of a piano, the piano action components of this type of instrument operate independently of the automatic playing components.

Therefore, it is possible that the instrument could be usable at least as a piano with restoration which involves work which is basically only servicing operations even though more would be required to use its automatic playing features.

However, if the instrument cannot be regarded as a musical instrument for tariff classification purposes, we do not find that it would then fall under a waste or scrap provision so long as its value is primarily in its rarity and restoration potential. An examination of the *Pierson Schade Forwarding Co.* decision, *supra*, shows that the pipes of the organ in question were to be melted down, the wood in its case salvaged for the veneer, and the worn keyboard totally discarded. The merchandise which was the subject of the *Borfeldt* decision, *supra*, similarly involved merchandise whose main value was in the salvage value of the materials the wornout manufactured articles were made of. Accordingly, we do not believe that the cited cases and legislative history establish a legislative intent to include articles which are not quite old enough to qualify as antiques, but which are primarily also valued as survivors of a bygone art or technology, within the provisions for waste and scrap.

The proposition that an article to qualify as a musical instrument must be capable of producing music in its condition as imported, as enunciated in *The Central Vermont Railway Co.* case cited by the ruling applicant and in other cases, has been used for such purposes as determining whether or not a device is an instrument or a toy, a completed musical instrument, a recognized musical instrument, etc. Allusion to this proposition is unnecessary to achieve agreement that the article in question is a musical instrument if not a candidate for the scrap pile. We do not agree that this proposition provides a basis for avoiding classification of the Phonoliszt-Violina as a musical instrument just because after a long life it naturally is no longer in mint condition.

Holding.—The combination reproducing piano-violin is classifiable as a musical instrument under item 725.52, TSUS.

(C.S.D. 80-245)

Drawback: Applicability to Duty Paid for Assists on Entry Not Designated for Drawback

Date: April 14, 1980
File: DRA-1-09-RRUCDB B
211373

Issue.—Must Customs pay drawback on duty paid for assists on entries which have not been designated for drawback?

Facts.—A consumption entry is filed covering 500 pieces of three different types of automotive parts. Included with the entry was a Special Customs Invoice (SCI) and a commercial invoice for the cost or value of patterns used to develop and manufacture two of the three types of parts covered by the entry. The SCI indicated that the duty due on another pattern used in the production of the third type part has previously been paid in connection with another entry of that style part.

Entered value was determined by adding the f.o.b. values of all 500 parts and the invoiced value of the patterns used in production of the two types of parts. The entered value for this entry did not include the value or cost of the patterns used to produce the third-type part covered by this entry.

Drawback was claimed and this entry was designated for determination of drawback. Customs officers state that the amount of drawback cannot be ascertained since the value of the assists cannot be prorated to the two types of parts because the production life of the pattern is unknown. Stated another way, Customs does not know exactly how many of these two parts will be produced with the aid of the pattern. Drawback liquidators feel that if drawback is paid now on the total value of the patterns for these two parts, Customs may be paying drawback on merchandise which will never be imported.

Law and analysis.—If an entry is designated for drawback, the claimant is entitled to all duties paid in connection with the importation of the articles covered by that entry which are used in manufacture or production and exported, assuming compliance with all regulations. We further assume that all automotive parts of the first two types covered by that entry, that is, those parts on which the duty for patterns was entirely paid in connection with the entry designated for drawback, have been exported.

We must also assume that the duty paid on the patterns on the subject entry was based on their full amortized value, or total engineering and ancillary costs of developing the patterns.

An importer may wish to pay duty prospectively by including the total value of assists as part of the value of the merchandise covered by the first entry. Or, if the importer knows the number of units to be produced, he or she may allocate the design and development costs (or costs of other assists) among the known number of units to be produced. Where it was contemplated that two models were to be produced, the design and development costs were properly allocated over the two models, notwithstanding the fact that only one model was imported (*United States* v. *Border Brokerage Co., Inc.* 66 Cust. Ct. 639, A.R.D. 288, (1971)). On the other hand, if the importer merely projects or hopes for production of a number of units, and there is no

showing of actual production or evidence that these units will be produced, the value of the assists must be prorated over the number of units actually produced at the time entry is made. Thus, when an importer claimed that 65,000 copies of a book were to be produced, although only 20,000 had been produced at the time entry of 5,000 copies was made, and there being no evidence of demand for 65,000 copies or that this amount would be printed, the importer was required to allocate the value of the assists over the 20,000 copies actually produced *Oxford University Press, N.Y., Inc.* v. *United States*, 36 CCPA 102, C.A.D. 405 (1949). The court pointed out that in similar cases expectations of production are not reached, and the manufacturers and exporters are left holding the bag. (36 CCPA at 105.) There is nothing to preclude an importer from paying duty on the value of all assists at the time of first entry to get it over with.

A drawback claimant is entitled to 99 percent of the duties paid on any entry which is properly designated according to our regulations. If that entry happens to include duty paid for the entire value of assists, then that duty is properly subject to drawback. If that entry merely refers to duty payments made for assists on previous entries covering merchandise which has not been designated for drawback, then those duty payments are not subject to refund as drawback.

The claimant is not receiving more drawback than he or she is entitled to, since the drawback is based on duty actually paid.

Holding.—When an entry is properly designated for drawback, and that entry includes duty paid on the total cost of assists, those duties are properly the subject of drawback. Claimants may not receive drawback on assists paid in conjunction with entries not designated for drawback, even though those assists are part of the cost of production of articles which are covered by entries which are designated for drawback.

(C.S.D. 80-246)

Generalized System of Preferences: Substantial Transformation and Direct Costs of Processing Operations

Date: April 23, 1980
File: CLA-2:RRUCV BS
542097

This is in reference to your letter of February 19, 1980, regarding the eligibility for duty-free treatment under the Generalized System of Preferences (GSP) of beer produced in Samoa, a beneficiary developing country.

Merchandise may qualify for duty-free treatment under GSP only if the sum of the cost or value of the materials produced in the bene-

ficiary developing country plus the direct cost of processing operations performed in such country is not less than 35 percent of the value of the article. The direct cost of processing operations means those costs either directly or indirectly incurred in, or which can be reasonably allocable to, the growth, production, manufacture, or assembly of the specific merchandise under consideration.

With your letter, you have transmitted a document entitled "1977 Profit and Loss Account," in which the manufacturer lists various costs believed to be either materials produced in Samoa or direct costs of processing operations. Our comments with regard to these costs are as follows:

Raw materials, filter, cleaning materials.—In addition to water, you advise that the raw materials used are barley, hops, and yeast, all of which are imported. As a result, these materials can be considered materials produced in Samoa only if substantially transformed in that country into new and different articles of commerce. It appears from the information submitted that the barley is transformed in Samoa into malt, a new and different article of commerce, and accordingly, we believe its cost may be included in the 35-percent requirement. However, it appears from the submitted diagram that the hops and yeast are not so transformed, and therefore, the cost of these materials cannot be included as part of the 35-percent requirement.

The filter used in the production process and the cleaning materials used to maintain the production equipment are direct costs of processing operations.

Electricity, fuel, water.—To the extent actually used in the production process, overhead expenses such as electricity, fuel, and water are direct costs of processing operations and are included in the 35-percent requirement.

Production—salaries and wages.—The salaries, wages, and fringe benefits of production workers are includable in the 35-percent requirement.

Insurance and maintenance.—Maintenance of the production equipment is an includable cost for purposes of the 35-percent requirement; however, liability insurance is not included in the production process itself, and therefore, is not a direct cost of processing operations.

Depreciation.—Depreciation of equipment and machinery used in the production process is a direct cost of processing operations and properly includable in the 35-percent requirement.

Selling expenses, administrative expenses, and finance charges are indirect costs of processing, and therefore, are not includable in the 35-percent requirement.

Based on the information submitted, we cannot make an accurate determination as to the total cost or value of the materials produced in the beneficiary developing country and the direct costs of processing operations, as compared to the total value of the merchandise. A further breakdown of the listed categories, regarding the cost or value

of the components comprising each category, would be necessary to make that determination.

(C.S.D. 80-247)

Value: Whether Prices to Related Selected Purchaser Fairly Reflect Market Value; Sufficiency of Evidence; Determination by Appraising Officer.

Date: April 30, 1980
File: CLA-2: RRUCV
061119 GE/RP

Re Decision on Application for Further Review of Protests No. 2809-8-000149 and 2809-8-000914

DISTRICT DIRECTOR OF CUSTOMS,
San Francisco, Calif.

DEAR SIR: This is in reply to the above-referenced protests concerning the valuation of certain ladies garments imported from Hong Kong by a selected purchaser in the United States.

Issue.—Whether the price between the related foreign manufacturer and the United States selected purchaser fairly reflects the market value of the imported merchandise.

Facts.—The referenced protests concern entries of the subject merchandise from August 1974, through December 1975. During the period from August 1974, to January 1975, the importer was a single selected purchaser of women's apparel from a Hong Kong manufacturer (hereinafter designated as ABC Corp.). The records of ABC Corp. were destroyed after ABC Corp. ceased operations in early 1975; no evidence relevant to entries involving ABC Corp. has been presented to Headquarters by the protestant.

In November 1974, the importer's president and director, together with two persons who had ownership interests in ABC Corp. established a new clothing manufacturing company (XYZ Ltd.) in Hong Kong. Each of the three cofounders owned a one-third interest in XYZ Ltd. On January 25, 1975, XYZ Ltd. commenced business and acted as the exclusive supplier to the importer. We note that the other entries herein being protested concern importations from XYZ Ltd.

An independent auditing firm reported that XYZ Ltd. averaged a 10-percent profit over the 9-month period from January 25, 1975, to September 30, 1975. A report by a different independent auditor shows that during the 13-month period from January 25, 1975, to March 31, 1976, XYZ Ltd. made a profit of only 5 percent. Over the next 11 months XYZ Ltd. sustained a loss of HK$460,000. According to additional information submitted to Headquarters, the importer

also sustained operating losses during this latter period. We note that no information has been submitted regarding the performance of the original manufacturing concern, ABC Corp.

The importer claims that the invoice prices properly represent the export value of the merchandise under section 402(b) of the Tariff Act of 1930, as amended. In the alternative, the importer contends that if constructed value is the proper basis of appraisement, the invoice prices properly represent such a value. The application of protestant's arguments in support of these claims differs depending on the dates of the entries involved.

On the other hand, your office is of the opinion that constructed value is the proper basis of appraisement. More specifically, it is the opinion of your office that the transactions between the importer and the manufacturing companies were not made at arm's length and that the invoice prices did not fairly reflect market value.

According to information submitted to Headquarters, the importer has filed a total of seven protests. However, we have received through official channels only these two applications for further review. This opinion, therefore, is limited to the particular issues and facts raised in the referenced applications for further review.

Law and analysis.—It is the opinion of Headquarters that constructed value is the proper basis of appraisement. Since the subject merchandise—ladies' cotton pant suits—is not on the final list (T.D. 54521), appraisement is to be made under section 402 of the Tariff Act of 1930, as amended.

The statutorily preferred basis of valuation under section 402 is export value. In order to determine export value, one of the requirements which must be met is that the goods in question be "freely sold or, in the absence of sales, offered for sale." The mere fact that export sales are made only to a selected purchaser does not necessarily preclude a showing that the merchandise was "freely sold" within the meaning of export value, sections 402(b) and 402(f)(1)(B), Tariff Act of 1930, as amended. However, if export value is to be established where sales are made to a selected purchaser the prices must fairly reflect the market value of the merchandise.

Where, as here, there are sales only to a related selected purchaser, several aspects of the transactions may be examined to determine whether the price fairly reflects market value. The position of Customs, as explained in T.D. 78–344, is that evidence including, but not limited to, circumstances of sales, relative mark-ups of the importer and exporter, and quantities and levels of trade will be accepted to prove that the sales were made at arm's length and that the relationship between the parties does not preclude a finding that the price fairly reflects market value. Customs, in acquiescence with the decision

of the Court of Customs and Patent Appeals in *D. H. Baldwin Co.* v. *United States*, 65 CCPA 67, C.A.D. 1208, 577 F. 2d 704 (1978), will not look to cost of production, home-market sales, and third country sales for comparison purposes in determining whether a proposed export value fairly reflects market value.

With respect to the entries made when the original manufacturing concern, ABC Corp., was supplying exclusively to the protestant, the protestant has submitted neither evidence nor arguments to show that the prices fairly reflect market value. Although your office did not provide Headquarters with any evidence indicating that the merchandise covered by these particular entries was not "freely sold", we have no basis to find that the appraising officer acted incorrectly in determining that export value was not the proper basis of appraisement. We must, therefore, deny the protests insofar as they involve entries made when ABC Corp. was the exclusive supplier to the protestant.

With regard to the entries involving importations from XYZ Ltd., protestant contends that evidence of arm's length transactions is warranted by a showing that the manufacturer's profit is identical to the standard profit of other manufacturers in Hong Kong producing similar merchandise. Protestant relies on the auditor's report showing that XYZ Ltd.'s profit from January 25, 1975, to September 30, 1975, was 10 percent, and sworn affidavits by each of the co-owners of XYZ Ltd. that the standard profit in the industry was likewise 10 percent.

The contention of protestant is undermined by the fact that the report by the other independent auditor shows that from January 25, 1975, to March 31, 1976, XYZ Ltd., made a profit of only 5 percent. In addition, the manager of XYZ Ltd. attested that "other factories are making profits of 15–16 percent for selling similar merchandise." Finally, there is some evidence that similar merchandise sold by a different manufacturer to unrelated parties was priced 10 percent higher than the invoice prices of the subject merchandise. The evidence which Headquarters has on hand is not complete and thus not sufficient to establish an export value equal to the invoice prices plus 10 percent. However, it does provide some indication that the invoice prices do not fairly reflect market value. See *Exbrook, Inc.*, v. *United States*, 69 Cust. Ct. 224, R.D. 11772 (1972).

Protestant contends further that the parallel original profitability and subsequent losses of XYZ Ltd., and itself support a finding that the two companies dealt fairly and at arm's length with each other. A company's general performance in terms of profits and losses is influenced by many factors and although profit is not an irrelevant consideration in determining arm's length transactions, the price a

company negotiates—whether at arm's length or not—does not necessarily determine in and of itself whether the company makes a profit or incurs a loss. Thus, if the two companies did perform similarly—which fact has not been clearly established—it does not necessarily follow that the prices were negotiated at arm's length.

The protestant also assets that the prices negotiated between XYZ Ltd., and itself were competitive with those of other Hong Kong manufacturers selling similar merchandise to unrelated U.S. purchasers. If this could be established as fact, Headquarters would be of the opinion that the invoice prices properly represent export value; however, protestant has not adduced any evidence to support this assertion.

The evidence proffered by protestant is not sufficient to establish that the prices of the subject merchandise fairly reflect market value, especially in light of evidence tending to contradict protestant's contention.

Protestant also contends that to the extent a relationship existed between itself and XYZ Ltd., this relationship did not influence the setting of prices of the imported merchandise. Protestant cites *The American Greiner Electronics, Inc.* v. *United States*, 79 Cust. Ct. 92, C.D. 4718 (1977), wherein the Court states:

> If it is ever possible to determine that invoice prices to a "selected purchaser at wholesale"—"fairly reflect the market value" without evidence of prices in other kinds of transactions for comparison purposes, that is so only when the relations between buyer and seller are clearly set forth and are such as to warrant an inference that they dealt at arm's length. Citing *National Carloading Corporation* v. *United States*, 57 Cust. Ct. 758, 759, A.R.D. 215 (1966).

In this regard, protestant notes that even though its president owned a one-third interest in XYZ Ltd., the owners of the other two-thirds interest would not have benefited by negotiating a price which did not fairly reflect the market value of the merchandise. Protestant's position is that this relationship supports a finding that prices were negotiated at arm's length. We disagree.

The fact that the importer's president owned less than a controlling interest in XYZ Ltd. does not guarantee that negotiations between the parties were conducted at arm's length. The importer—as a related selected purchaser—may have been in a position to negotiate prices which did not fairly reflect market value but nontheless benefited the manufacturer enough so as to assure a continued business relationship. Doubt as to the independence of the parties, therefore, still exists. Further, the present case is not one "without evidence of prices in other kinds of transactions for comparison purposes." As noted above, there is evidence that similar merchandise sold by a

different manufacturer in Hong Kong to unrelated U.S. purchasers was priced 10 percent higher than the subject merchandise. Without an adequate explanation of this circumstance, protestant has not supported its contention that the relationship between the parties was such as to warrant a finding of arm's-length transactions.

In view of the evidence presented, it is our opinion that the invoice prices were not negotiated at arm's length and do not fairly reflect the market value of the subject merchandise. Export value, therefore, has not been established. Furthermore, the protestant has not established that the invoice prices include all elements of value and thus properly represent constructed value. Accordingly, we are unable to say that the appraising officer acted incorrectly in finding that the constructed value was not represented by the invoice prices.

Holding.—We find that the invoice prices do not fairly reflect the market value or include all elements of value of the subject merchandise, and that constructed value, as determined by the appraising officer, is the proper basis of appraisement. You are, therefore, directed to deny the protests in full.

(C.S.D. 80-248)

Vessel Control: Use of Vessels of Less Than Five Net Tons in the Fisheries; 46 U.S.C. 251

Date: September 26, 1980
File: VES-7-01-RRUCDC
104589 PH

To: All Regional Commissioners.
From: Director, Carriers, Drawback and Bonds Division.
Subject: Use of Vessels of Less Than Five Net Tons in the Fisheries.

It has come to our attention that there may be some confusion regarding the entitlement of the subject vessels to engage in the fisheries.

Under 46 U.S.C. 251, enrolled and licensed vessels of 20 tons and upward or "vessels of less than 20 tons, which although not enrolled, have a license in force * * * and no others, shall be deemed vessels of the United States entitled to the privileges of vessels employed in the coasting trade or fisheries".

The confusion to which our attention has been called may have been caused by the fact that 46 U.S.C. 251 entitles certain enrolled and licensed or licensed vessels, "and no others", to engage in the fisheries. Because there is no provision of law for the licensing or enrollment and licensing of vessels of less than 5 net tons, this provision could be construed to exclude such vessels from engaging in the American fisheries.

Instead of so interpreting 46 U.S.C. 251, the Customs Service has long held that undocumented vessels of less than 5 net tons may engage in the American fisheries when owned by citizens of the United States or by aliens resident in the United States. This administrative practice is now explicitly provided for in the Customs Regulations (19 CFR 4.96(b)).

In T.D. 56382(6), we considered whether this administrative practice was affected by Public Law 88–308 (16 U.S.C. 1081–1085)—since repealed by section 402(b), Fishery Conservation and Management Act of 1976 (90 Stat. 360)—which, among other things, prohibited any vessel "except a vessel of the United States" from fishing in U.S. territorial waters. We stated that because the legislative history of Public Law 88–308 indicated no intent on the part of Congress to disturb the administrative practice under consideration, the practice would be continued as before. Parenthetically, we noted in this Treasury decision that the administrative practice under consideration had been followed "at least since 1940".

Please insure that all Customs officers in your region are aware that vessels of less than 5 net tons, whether built in the United States or of foreign-build, owned by U.S. citizens or by aliens resident in the United States, may engage in the American fisheries. (See T.D. 56382(6) and sec. 4.96(b), Customs Regulations.)

(C.S.D. 80–249)

Conditionally Free Merchandise: Worn Aircraft Tires Imported For Retreading; Civil Aircraft Agreement

Date: May 15, 1980
File: ENT–1–01 RRUEE
712861 M

This ruling concerns whether worn aircraft tires imported for retreading and subsequent use on a civil aircraft are entitled to duty-free entry under the Civil Aircraft Agreement (Title VI of Public Law 96–39).

Issue.—Are aircraft tires imported for retreading and subsequent use on a civil aircraft entitled to duty-free entry under the Civil Aircraft Agreement?

Facts.—An American aircraft tire retreading company imports worn aircraft tires from some certified Canadian airlines to be retreaded and returned for further service on the aircraft of the Canadian airlines. The American tire retreading company notes that the tires involved will conform to the FAA standards after they are retreaded. The

Federal Aviation Administration (FAA) has verbally informed us that this company operates a certified retreading facility.

Law and analysis.—Section 601 of Public Law 96–39, in pertinent part, provides that aircraft parts certified for use in civil aircraft and qualified under one of the listed item numbers of the tariff schedules may be imported free of duty. The term "certified for use" means that the importer shall file a written statement, accompanied by such supporting documentation as the Secretary of the Treasury may require, with the appropriate Customs officer stating that the imported article has been imported for use in civil aircraft, that it will be so used, and that the article has been approved for such use by the FAA or by the airworthiness authority in the country of exportation, if such approval is recognized by the FAA as an acceptable substitute for FAA certification, or that an application for such use has been submitted to, and accepted by the FAA.

We believe that the fact that the tires, when imported, are to be conditioned before being again placed on the aircraft does not prohibit them from being entered duty-free under the Civil Aircraft Agreement. In a prior ruling, we held semifinished aircraft parts may be imported under the Civil Aircraft Agreement. Certainly at the time of importation those parts were not in condition to be placed on the aircraft. We believe that the certification requirement is fulfilled because the tires are airplane tires previously approved for use on civil aircraft, and are imported for use on a civil aircraft, after such tires are retreaded. Of course, if the tires, upon testing, are rejected for retreading and are subsequently used for a different purpose than being placed on a civil aircraft, a diversion will have occurred and the importer at the time of diversion would be obligated to Customs for the appropriate duty.

Holding.—Aircraft tires imported for retreading and subsequent use on a civil aircraft are entitled to duty-free entry under the Civil Aircraft Agreement.

(C.S.D. 80–250)

Reliquidation: Negligent Inaction by Importer's Employee; Applicability of Section 520(c)(1), Tariff Act of 1930, As Amended

Date: May 20, 1980
File: LIQ-8-01 RRUEE
712886 BM

This ruling reviews a protest against a District Director's refusal to reliquidate an entry pursuant to section 520(c)(1), Tariff Act of 1930, as amended.

Issue.—Is the failure of the importer, after being requested by Customs to furnish additional information to aid Customs in determining the value of the merchandise, a clerical error, mistake of fact, or other inadvertence within the meaning of section 520(c)(1), Tariff Act of 1930, as amended?

Facts.—On November 4, 1976, a consumption entry was filed for the merchandise involved. On December 13, 1976, Customs at the port of entry, requested on Customs form 28 information from the importer concerning the use of assists. On November 18, 1977, Customs stated on Customs form 29 that in the absence of a reply from the importer Customs proposed to appraise the merchandise at a higher value by taking into consideration the research, development and engineering assists involved. Since Customs did not receive a reply from the importer in regard to either notice sent him, the entry was liquidated on February 10, 1978, with the value increase as proposed on Customs form 29. This action resulted in the assessment of approximately $14,300 in additional duties, which were paid by the importer in July 1978.

On October 10, 1978, the importer requested reliquidation of the entry under section 520(c)(1), Tariff Act of 1930, as amended. The request was denied on November 27, 1978, by the District Director of the port where the merchandise was entered. On December 6, 1978, the importer filed a protest claiming that his failure to comply with the notices sent by Customs to him was due to a clerical error on the part of a former employee, who inadvertently filed the request rather than supply Customs with the appropriate answer.

The attorney for the importer amended the protest and stated that Customs should consider that the liquidation of the entry was the result of a mistake of fact or inadvertence not amounting to an error in the construction of law for the following two reasons:

(1) the liquidation of the entry was made by Customs on an arbitrary basis because Customs at the port of entry did not have information before it to substantiate the inclusion of the assists as part of the value of the merchandise, and

(2) The Customs Court, in *C. J. Tower and Sons of Buffalo, Inc.* v. *the United States*, 68 Cust. Ct. 17. C.D. 4327 (1972), ordered the reliquidation under section 520(c)(1) of the Tariff Act of 1930, as amended, of an entry liquidated by Customs without its knowledge that the merchandise was eligible for duty-free entry as emergency war material.

Law and analysis.—Section 520(c)(1), Tariff Act of 1930, as amended (19 U.S.C. 1520(c)(1)), in pertinent part, provides that the District Director may reliquidate an entry to correct a clerical error, mistake of fact, or other inadvertence not amounting to an error in the construction of law.

The importer contends that his employee filed the two notices from Customs concerning the assists, instead of responding to such notices. A failure to act may be correctable under section 520(c)(1), Tariff Act of 1930, as amended, when it is coupled with another significant factor, such as a misunderstanding of the facts, or the inability of the importer to obtain proper documentation to establish a claim. However, in this case the only significant factor present in the matter is the failure to perform a required act. Therefore, we conclude that the failure by the importer to respond to the two notices from Customs concerning the assists amounted to negligent inaction on the part of the importer, and therefore, did not involve a clerical error, mistake of fact, or inadvertence within the meaning of section 520(c)(1), Tariff Act of 1930, as amended. (Headquarters rulings 302801 M, dated Dec. 2, 1975, 302896 M, dated Nov. 19, 1975, EV 342.6 D, dated Aug. 15, 1973, EV 332.1 D, dated Jan. 13, 1969, and EV 473.31 D, dated Apr. 12, 1965, noted.)

If an importer fails to respond to inquiries from Customs for further information, as happened in this case, Customs must liquidate the entry on the basis of the best information available to it. Where there is doubt regarding the appraisement of the merchandise, Customs has an obligation to protect the revenue and must liquidate the entry at the higher value. In this case, there was a reasonable basis for including the costs of the assists in the value of the merchandise. Therefore, the Customs officer did not make a clerical error, mistake of fact, or other inadvertence within the meaning of section 520(c)(1), Tariff Act of 1930, as amended.

If the theory of the importer's attorney on this point was accepted, Customs might be placed in a position whereby it might never be able to liquidate an entry because of the failure of the importer to provide Customs with additional information requested. Thus, such a transaction would never be finalized. This result would clearly be contrary to the intent of Congress, as evidenced by section 209 of Public Law 95–410. This section added a new section 504 to the Tariff Act which places a time limitation on Customs as to when entries filed on or after April 1, 1979, must be liquidated by Customs. With few exceptions noted, such entries must be liquidated within 1 year after the date of entry.

The importer's attorney believes that *C. J. Tower and Sons of Buffalo, Inc.* v. *United States*, 68 Cust. Ct. 17, C.D. 4327 (1972), is applicable to this case. However, in the *C. J. Tower* case neither Customs nor the importer were aware until after the liquidation of the entry had become final that the merchandise involved was emergency war material and therefore eligible for duty-free entry. The court concluded that such lack of knowledge on the part of Customs

and the importer amounted to a mistake of fact, or inadvertence within the meaning of section 520(c)(1) of the Tariff Act. In this particular case, on the other hand, the importer failed to respond to Customs' notices for further information regarding the assists. Such failure on the part of the importer to respond to the inquiries from Customs amounted to negligent inaction on the part of the importer and thus is not correctable as a clerical error, mistake of fact, or inadvertence within the meaning of setion 520(c)(1) of the Tariff Act.

Holding.—The failure of the importer to respond to Customs' requests for additional information to aid Customs in determining the value of the merchandise amounted to negligent inaction on the part of the importer, and therefore, did not involve a clerical error, mistake of fact, or inadvertence within the meaning of section 520(c)(1), Tariff Act of 1930, as amended. The protest is therefore denied in full.

United States Court of International Trade

One Federal Plaza
New York, N.Y. 10007

Chief Judge

Edward D. Re

Judges

Paul P. Rao
Morgan Ford
Scovel Richardson
Fredrick Landis
James L. Watson
Herbert N. Maletz
Bernard Newman
Nils A. Boe

Senior Judge

Samuel M. Rosenstein

Clerk

Joseph E. Lombardi

The President approved and signed Public Law 96–417, the Customs Courts Act of 1980, on October 10, 1980. The act, effective November 1, 1980, clarifies and expands the status, jurisdiction, and powers of the former U.S. Customs Court and changes the name of the court to the U.S. Court of International Trade.

Effective November 1, 1980, the procedures for publication and the forms of citation of decisions of the court are as follows:

1. A slip opinion number (Slip Op.) is assigned to an opinion on the date of publication and is used as the official citation, together with the date of publication, until the opinion appears in the official reports of the U.S. Court of International Trade. The form of citation to a slip opinion is *The American Schack Company, Inc.* v. *United States*, 1 CIT —, Slip Op. 80–1 (Nov. 3, 1980). (The U.S. Customs Court reports terminate with C.D. 4878 in vol. 85. Vol. 1 of the U.S. Court of International Trade Reports begins with the first opinion published after Nov. 1, 1980 (Slip Op. 80–1 reported below).)

2. After an opinion appears in the official reports, the slip opinion number is not used, and the citation is to the volume and page of the official reports together with the year of publication; e.g., *The American Schack Company, Inc.* v. *United States*, 1 CIT 1 (1980). (When an opinion is also published in the Federal Supplement or Federal Rules Decisions, citation to these reports is included following the citation to the official reports.)

3. The form of citation to opinions of the U.S. Customs Court remains the same; e.g., *Labay International, Inc.* v. *United States*, 83 Cust. Ct. 152, C.D. 4834, (1979); *Alberta Gas Chemicals, Inc.* v. *United States*, 84 Cust. Ct. —, C.R.D. 80–1, 483 F. Supp. 303 (1980).

4. Abstracts of decisions not supported by an opinion will continue to be numbered and published as they have been in the past.

The first opinion of the U.S. Court of International Trade (Slip Op. 80–1) follows.

Decision of the United States Court of International Trade

(Slip Op. 80–1)

THE AMERICAN SCHACK COMPANY, INC., PLAINTIFF, *v.* UNITED STATES, DEFENDANT

Court No. 77–3–00366

HOOD SYSTEMS

Parts of hood systems which are designed for a particular basic oxygen furnace used in the manufacture of steel, claimed to be properly subject to classification under item 661.70, TSUS, held properly classifiable under item 661.30, TSUS, as alternatively claimed by defendant.

In the field of customs jurisprudence it is a well-recognized principle that a part of a part is a part for tariff purposes. *United States* v. *American Express Co.*, 29 CCPA 87, C.A.D. 175 (1941).

When the law of most States requires such equipment for safe and efficient operation, as in the case at bar, it is considered an essential part. *Eric Wedemeyer* v. *United States*, 7 Cust. Ct. 141, C.D. 556 (1941).

Equipment required by law to prevent pollution and to protect workers falls under the so-called rule of essentiality. Succinctly stated, this rule provides that an integral, constituent, or component part,

without which the article to which it is joined cannot function as such, is a part for tariff purposes.

Since it has been satisfactorily established that the imported merchandise falls within item 661.30, supra, the claim by plaintiff under item 661.70, supra, is of no avail since the former is more specific than the latter. *F. L. Smidth & Company* v. *United States*, 56 CCPA 77, C.A.D. 958, 409 F. 2d 1369 (1969); *C. J. Tower & Sons of Buffalo, Inc., et al.* v. *United States*, 69 Cust. Ct. 105, C.D. 4379, 351 F. Supp. 604 (1972), aff'd, 61 CCPA 74, C.A.D. 1124, 496 F. 2d 1219 (1974).

[Judgment for defendant.]

(Decided November 3, 1980)

Dickie, McCamey & Chilcote (*J. Lawrence McBride* at the trial and on the brief) for the plaintiff.

Alice Daniel, Assistant Attorney General; *Joseph I. Liebman*, Attorney in Charge, Field Office for Customs Litigation (*Sidney N. Kuflik* at the trial; *Robert H. White* on the brief), for the defendant.

FORD, Judge: By this action plaintiff seeks a reclassification of three entries liquidated at the Port of Chicago at 9.5 percent ad valorem under the provisions of item 657.20, TSUS. Plaintiff contends the merchandise, parts of a hood system specifically designed for a basic oxygen furnace at the Inland Harbor Works plant of the Inland Steel Co., is properly subject to classification under item 661.70, TSUS, and as such dutiable at 6 percent ad valorem.

Defendant by its answer to the complaint alternatively claims the merchandise to be properly dutiable at 9.5 percent ad valorem under the provisions of item 661.30, TSUS.

The pertinent statutory provisions and headnotes read as follows:

Tariff Schedules of the United States, 19 U.S.C. § 1202:

SCHEDULE 6.—METALS AND METAL PRODUCTS

* * * * * * *

PART 3.—METAL PRODUCTS

* * * * * * *

Subpart G.—Metal Products Not Specially Provided For

Subpart G headnotes:

1. This subpart covers only articles of metal which are not more specifically provided for elsewhere in the tariff schedules.

* * * * * * *

Articles of iron or steel, not coated or plated with precious metal:

* * * * * * *

Other articles:

* * * * * * *

657.20 Other ..... 9.5% ad val.

* * * * * * *

PART 4.—MACHINERY AND MECHANICAL EQUIPMENT

* * * * * * *

Subpart A.—Boilers, Non-Electric Motors and Engines, and Other General-Purpose Machinery

Subpart A headnote:

1. A machine or appliance which is described in this subpart and also is described elsewhere in this part is classifiable in this subpart.

* * * * * * *

661.30 Industrial and laboratory furnaces and ovens, nonelectric, and parts thereof ... 9.5% ad val.

* * * * * * *

Industrial machinery, plant, and similar laboratory equipment, whether or not electrically heated, for the treatment of materials by a process involving a change of temperature, such as heating, cooking, roasting, distilling, rectifying, sterilizing, pasteurizing, steaming, drying, evaporating, vaporizing, condensing, or cooling; instantaneous or storage water heaters, nonelectrical; all the foregoing (except agricultural implements, sugar machinery, shoe machinery, and machinery or equipment for the heat-treatment of textile yarns, fabrics, or made-up textile articles) and parts thereof:

* * * * * * *

661.70 Other ..... 6% ad val.

General headnotes and rules of interpretation:

10. *General interpretative rules.*—For the purposes of these schedules—

* * * * * * *

(c) an imported article which is described in two or more provisions of the schedules is classifiable in the provision which most specifically describes it; but, in applying this rule of interpretation, the following considerations shall govern:

(i) a superior heading cannot be enlarged by inferior headings indented under it but can be limited thereby;

> (ii) compar sons are to be made only between provisions of coordinate or equal status, i.e., between the primary or main superior headings of the schedules or between coordinate inferior headings which are subordinate to the same superior headings;
>
> * * * * * * *
>
> (ij) a provision for parts of an article covers a product solely or chiefly used as a part of such article, but does not prevail over a specific provision for such part.

The record consists of the testimony of four witnesses called on behalf of plaintiff and two by defendant. In addition, eight exhibits were received in evidence for plaintiff and three on behalf of defendant.

While the commercial invoices refer to two complete hood systems and spares, the testimony establishes the three entries before the court cover only a portion of the hood systems. A fourth entry, not before the court, covers the balance of the imported merchandise but not the complete system. Additional components of the complete system were manufactured in the United States.

Plaintiff's witnesses, Dixon and Feinstein, agreed that importations covered by the three entries before this court do not constitute complete hood systems. The hood system is mounted above, but some distance from, the furnace mouth so as to permit it to conduct the gases away from the furnace to a venturi scrubber which subsequently cleans the gases. This unit is operated on the basis of suppressed combustion, that is, preventing combustion to the best of its ability. This is accomplished by raising or lowering the skirt. The raising and lowering of the skirt is actuated by the furnace operator who activates hydraulic cylinders. The raising and lowering of the skirt has a dual purpose. It permits the proper amount of air into the gap which is formed between the skirt and furnace in order to best utilize the suppressed combustion system. Additionally, the skirt is moved by use of the hydraulic cylinders during the melting operation to either fill or empty the furnace.

The gases pass through the hood to the quenching system where they are cooled from approximately 2600 degrees Fahrenheit to approximately 1800 degrees Fahrenheit. This cooling is the result of the gases passing through the membrane hood which consists of circulating ducts of tubes through which water is pumped. The water then flows to a cooling tower and is recirculated to the hood. Cooling is necessary to protect the integrity of the hood, which under extreme heat could corrode or be otherwise incapacitated. The gas then proceeds vertically upward to equipment known as the venturi, which is used to take the dust out of the gas. The gases which have been freed of the dust are then passed into a large fan and flared off.

The lower portion of the hood system is designed to be movable on tracks similar to railroad tracks to permit the relining of a furnace. This track or trolley is operated by an electric motor and is manufactured in the United States.

The witnesses agree there is no primary function of the hood system. Mr. Mihm, a former employee of plaintiff called on behalf of defendant, considered the three basic functions of the hood to be conveying of gas, maintaining pressure, and extracting heat. Mr. Meder, called as a rebuttal witness for plaintiff, agreed there was no main function of the hood system and considered conveying, cooling, and pressure control to be the three basic functions of the hood.

An exhaust system of some form is required by law to prevent pollution as well as to protect workers operating near the furnace. None of the witnesses were aware of any basic oxygen furnace, presently in use in the United States, which did not have some form of exhaust system. The witnesses did not, however, agree on the question as to whether such system is a part of the furnace. It is noted that defendant's witness Nagati considered such a system, together with the gas cleaning system, to be an integral part of the basic oxygen furnace without which it cannot safely or legally operate.

Whether the sytem is a part for tariff purposes is a question to be determined by the court. It is uncontroverted that the importations consist of parts of a hood exhaust system. In the field of customs jurisprudence it is a well-recognized principle that a part of a part is a part for tariff purposes. *United States* v. *American Express Co.*, 29 CCPA 87, C.A.D. 175 (1941). Therefore, if the imported parts of the exhaust hood system are parts of the basic oxygen furnace, they are for tariff purposes parts of the furnace.

Rule 10(ij) of the general interpretative rules provides that a product solely or chiefly used as a part is covered by a provision for "parts" but does not prevail over a specific provision for such part. Inasmuch as the imported system is designed for use with a specific furnace, there can be no question as to its sole use. The court is of the opinion that the hood exhaust system is part of the furnace. All witnesses agree they know of no basic oxygen furnace presently in operation which does not have an exhaust system. An exhaust system, according to the witnesses, is, to the best of their knowledge, required by law to prevent pollution and to protect the workers operating the furnaces. Such use would bring the imported merchandise under the so-called rule of essentiality. Succinctly stated, this rule provides that an integral, constituent, or component part, without which the article to which it is joined cannot function as such, is a part for tariff purposes. *United States* v. *Willoughby Camera Stores, Inc.*, 21 CCPA 322, T.D. 46851, *cert. denied*, 292 U.S. 640 (1933); *United States* v. *The J. D. Richardson Company*, 36 CCPA 15, C.A.D. 390 (1948), *cert.*

denied, 336 U.S. 936 (1949); *United States* v. *John A. Steer Co.*, 46 CCPA 132, C.A.D. 715 (1959). When the law of most states requires such equipment for safe and efficient operation, as in the case at bar, it is considered an essential part. *Eric Wedemeyer* v. *United States*, 7 Cust. Ct. 141, C.D. 556 (1941). Even if the use of the imported merchandise were optional, it is a part for tariff purposes, since it contributes to the safe and efficient operation of the furnace. *Gallagher & Ascher Company* v. *United States*, 52 CCPA 11, C.A.D. 849 (1964).

In view of rule 10(ij) the court must consider whether the imported merchandise is specifically provided for. However, even if the court were to hold the imported merchandise to fall within item 661.70, supra, as claimed, and the court does not so hold, such claim would be of no avail to plaintiff since the law has been settled that item 661.30, supra, is more specific and prevails over classification under item 661.70. *F. L. Smidth & Company* v. *United States*, 56 CCPA 77, C.A.D. 958, 409 F.2d 1369 (1969); *C. J. Tower & Sons of Buffalo, Inc., et al.* v. *United States*, 69 Cust. Ct. 105, C.D. 4379, 351 F. Supp. 604 (1972), *aff'd*, 61 CCPA 74, C.A.D. 1124, 496 F.2d 1219 (1974).

Further, the record does not satisfactorily establish the primary purpose of the said unit to be the result of a change of temperature, nor does the unit operate on materials as that term is utilized in item 661.70. The legislative history indicates only such type of article is intended to be covered by said provision. See Tariff Classification Study, schedule 6, page 263.

In view of the foregoing, it is apparent that a basket provision such as item 657.20, supra, the provision under which the merchandise was classified, cannot prevail over a provision for parts. *Beacon Cycle & Supply Co., Inc.* v. *United States*, 81 Cust. Ct. 46, C.D. 4764, 548 F. Supp. 813 (1978). Based upon the record and for the reasons set forth, plaintiff's claim is overruled and judgment will be entered accordingly.

Recent Unpublished Customs Service Decisions

The following listing of recent administrative decisions issued by the Office of Regulations and Rulings, U.S. Customs Service, and not otherwise published, is published for the information of Customs officers and the importing community. Although the decisions are not of sufficient general interest to warrant publication as Treasury decisions, the listing describes the issues involved and is intended to aid Customs officers and concerned members of the public in identifying matters of interest which recently have been considered by the Office of Regulations and Rulings.

A copy of any decision included in this listing, identified by its date and file number, may be obtained in a form appropriate for public distribution upon written request to the Office of Regulations and Rulings, attention: Legal Reference Area, room 2404, U.S. Customs Service, 1301 Constitution Avenue NW., Washington, D.C. 20229. These copies will be made available at a cost to the requester of 10 cents per page. However, the Customs Service will waive this charge if the total number of pages copied is 10 or less.

Decisions listed in earlier issues of the CUSTOMS BULLETIN, through July 2, 1980, are available in microfiche format at a cost of $23.85 (15 cents per sheet of fiche). It is anticipated that additions to the microfiche will be made quarterly and subscriptions are available. Requests for the microfiche now available and for subscriptions should be directed to the Legal Reference Area. Subscribers will automatically receive updates as they are issued and will be billed accordingly.

Dated: November 17, 1980.

MARVIN M. AMERNICK,
(For Director, Regulations and Information Division,
Office of Regulations and Rulings).

Date of decision	File No.	Issue
10-22-80	104375	Vessels: Relief from duties accruing under 19 U.S.C. 1466 on the cost of vessel repairs
10-29-80	104512	Carrier control: Arrival from foreign of American vessel without certified copy of crew list and resultant penalty for failure to comply with 19 U.S.C. 1434
10-22-80	104530	Vessels: Delayed collection of special tonnage tax and light money
10-22-80	104843	Carrier control: Whether time limit requirements of 19 U.S.C. 1433, 1434 or 1435 may be waived owing to limited dock facilities and dangerous boarding conditions
10-22-80	104844	Vessels: Intended importation of a pleasure boat of foreign registry by a nonresident (812.30, 696.05, 696.10)
10-27-80	104848	Vessels: Retention of records regarding collection and payment of duty
10-20-80	104868	Vessels: Use of foreign-flag vessel to lay pipe between drilling platforms, wellheads and other coastwise points
10-30-80	104899	Carrier control: Application of the coastwise laws to the movement of a foreign storage vessel from its permanent station, for safety purposes, during the transfer of Alaskan oil
10-29-80	104922	Carrier control: Whether there is any prohibition against the transportation of a medical team between ports of the United States on one or more foreign flag vessels
10-28-80	711721	Exemptions: Designation of agent to clear personal baggage and household goods
10- 6-80	712844	In-bond: Exportation or the transportation and exportation of prohibited merchandise
10-21-80	712890	Country of origin marking: Cabinet filler plates
10-27-80	713261	Country of origin marking: Carburetor adjustment needles
10-28-80	714115	Entry: Release of merchandise under the expedited entry/entry summary procedure
10-15-80	714267	Entry: Special immediate delivery procedure for fresh fruit and vegetables
10-31-80	715079	Prohibited and restricted importations: Trademark infringement: watches
09-16-80	060633	Classification: Fungicide: disulfide or tetramethylthiuram disulfide (425.36)
09-15-80	061345	Classification: American selling price: ladies casual footwear (700.60)
09-18-80	061467	Classification: Unfinished snowmobile rubber boot bottoms (774.60, 774.50)
10-30-80	061544	Classification: American selling price: hip and chest-high waders (700.60)

Date of decision	File No.	Issue
10-24-80	061779	Classification: American selling price: child's snowmobile boot with attached liner
10-29-80	061796	Classification: Appraisement under U.S. value : aluminum components-extrusions and accessories
10-30-80	061829	Classification: American selling price: men's protective leg-type tie boot (700.60)
10-30-80	061959	Classification: American selling price: children's boots (700.60)
10-30-80	061995	Classification: American selling price: ladies footwear (700.60)
10-17-80	062536	Classification: Water heater control unit (711.78)
10-30-80	062941	Classification: Canned sport salmon (112.18)
10- 7-80	064149	Classification: Slingshot (730.88)
10- 2-80	064397	Classification: Oil additive used in automobile or truck engines (799.00, 657.30)
10- 2-80	064664	Classification: Roller skate shoes
09-16-80	064721	Classification: Dolls and toy figures of humans (737.40, 737.22)
10-16-80	064880	Classification: Novelty sponge figures of animals (774.55)
10-30-80	064913	Classification: Christmas ornaments (772.97, 386.09, 772.95)
10-31-80	064945	Classification: Packaging pads used as box liners for agricultural products (256.70, 389.62, 359.50)
10-15-80	065076	Value: Applicability of export value appraisement to merchandise subject to trigger pricing
10-10-80	065102	Classification: American selling price: moonboots (700.60)
10-30-80	065228	Classification: Printing mechanisms (676.30, 676.52)
10-30-80	065367	Classification: Clutch drum (680.54)
10- 1-80	066011	Classification: China Christmas house lamps with musical movements (725.50)
10-10-80	066028	Classification: Dehydrated citrus fruit concentrates in powder form (183.05)
10-24-80	066032	Classification: Visors and headwear (382.33, 703.15, 703.05)
10-16-80	066063	Classification: Aircraft towing tractors (692.40)
10-20-80	066125	Classification: Laminating presses (678.50)
10-10-80	066137	Classification: Nuts, studs and studding (646.57, 657.25, 646.56)
09-15-80	066139	Classification: Golf shoes (700.53)
10- 5-80	066209	Classification: Container stacker (692.40)
10-24-80	066224	Classification: Shoe manufacturing machines (678.50, 674.42, 678.10, 672.14, 664.10, 668.02)
10-10-80	066227	Classification: Fried onions (141.50)
09-15-80	066235	Classification: Cylinder head remanufacturing machines (674.32)
10-17-80	066279	Classification: Ferro calcium silicon coated wire (657.25)

Date of decision	File No.	Issue
10-21-80	066311	Classification: Wind shield and storage bag (389.62, 657.40)
10- 9-80	066316	Classification: Engine ignition improvement device for fuel conservation and pollution reduction (683.60)
10-24-80	066359	Classification: Portable vulcanizing press for conveyor belts (678.50)
10-20-80	066360	Classification: Stainless steel boning or filleting knives and gurry spoon (650.15, 650.17, 651.47)
10-20-80	066390	Classification: Zippered pencil pouch (706.60)
10- 1-80	066529	Classification: Women's cotton denim jeans featuring ornamented belt loops (382.00)
10-30-80	066726	Classification: Artificial silk flowers (748.21)

International Trade Commission Notices

Investigations by the U.S. International Trade Commission

DEPARTMENT OF THE TREASURY,
November 20, 1980.

The appended notices relating to investigations by the U.S. International Trade Commission are published for the information of Customs officers and others concerned.

R. E. CHASEN,
Commissioner of Customs.

In the Matter of CERTAIN TURNING MACHINES AND COMPONENTS THEREOF	Investigation No. 337–TA–72

Notice of Extension of Deadline

AGENCY: U.S. International Trade Commission.

ACTION: Extension of the deadline for the Commission's final determination in this investigation from October 24, 1980, to 45 days after the filing of an executed settlement agreement; if such agreement is not filed by the parties by November 3, 1980, the Commission will issue its final determination shortly thereafter.

SUMMARY: The Commission granted the parties unanimous request that the 12-month rule under 19 U.S.C. 1337(b)(1) and that the Commission's final determination be postponed to 45 days after the filing of an executed settlement agreement. The parties made this request to provide them with more time in which to finalize a settlement agreement.

PUBLIC: ACCESS TO RECORD: Copies of the Commission's action and order, and any other public document in this investigation are available to the public during official working hours (8:45 a.m. to 5:15 p.m.) in the Office of the Secretary, U.S. International Trade

Commission, 701 E Street NW., Washington, D.C. 20436; telephone 202-523-0161.

FOR FURTHER INFORMATION CONTACT: Scott Daniels, Esq., Office of the General Counsel, 701 E Street NW., Washington, D.C. 20436; telephone 202-523-0480.

By order of the Commission:

Issued: October 30, 1980.

KENNETH R. MASON,
Secretary.

In the Matter of CERTAIN TURNING MACHINES AND COMPONENTS THEREOF	Investigation No. 337-TA-72

Notice of Commission Request for Comments Concerning Settlement Agreement

AGENCY: U.S. International Trade Commission.

ACTION: Request for public comment on proposed settlement agreement.

SUMMARY: This settlement agreement would result in termination of this investigation. This notice requests public comment on the agreement within thirty (30) days.

DATES: Comments will be considered if received within thirty (30) days of this notice. Comments should conform with section 201 8 of the Commission's Rules of Practice and Procedure (19 C.F.R. 201.8) and should be addressed to Kenneth R. Mason, Secretary, U.S. International Trade Commission, 701 E Street NW., Washington, D.C. 20436.

SUPPLEMENTARY INFORMATION: In connection with the Commission's investigation, under section 337 of the Tariff Act of 1930 (19 U.S.C. 1337) of alleged unfair methods of competition and unfair acts in the importation or sale of certain turning machines and components thereof in the United States, respondents Yamazaki Machinery Corp. and Yamazaki Machinery Works Ltd. ("Yamazaki") and complainant Warner & Swasey Co. jointly requested the Commission on October 22, 1980, to terminate the investigation on the basis of a license agreement between Yamazaki and Warner & Swasey. The Commission investigative attorney joined in the request to terminate. The license agreement between Warner & Swasey and Yamazaki contains confidential business information which may not be publicly disclosed. However, the essence of the agreement, which is described in the motion to terminate, is that Yamazaki may

continue to service turning machines already in the United States and to import a limited additional number of machines; in return, Warner & Swasey is to receive a specified sum of money from Yamazaki. Copies of the motion to terminate are available for inspection by interested persons in the Office of the Secretary to the Commission, 701 E Street NW., Washington, D.C. 20436; 202-523-0161.

WRITTEN COMMENTS REQUESTED: In light of the Commission's duty to consider the public interest, the Commission requests written comments from interested persons and agencies concerning the effect of the termination of this investigation based on the license agreement upon (1) the public health and welfare, (2) competitive conditions in the U.S. economy, (3) the production of like or directly competitive articles in the United States, and (4) U.S. consumers. Notice of this investigation was published in the Federal Register of October 24, 1979 (44 F.R. 61271).

ADDITIONAL INFORMATION: The original and 19 true copies of all written submissions must be filed with the Secretary to the Commission. Any person desiring to submit a document (or a portion thereof) to the Commission in confidence must request in camera treatment. Such request should be directed to the Secretary and must include a full statement of the reasons why the Commission should grant such treatment. The Commission will either accept such submission in confidence or return it. All nonconfidential written submissions will be open to public inspection at the Office of the Secretary.

FOR FURTHER INFORMATION CONTACT: Scott Daniels, Esq., Office of the General Counsel, U.S. International Trade Commission, 701 E Street NW., Washington, D.C. 20436; telephone 202-523-0480.

By order of the Commission.

Issued: November 3, 1980.

KENNETH R. MASON,
Secretary.

TA-131(b)-5, TA-503(a)-7 and 332-113

PROBABLE ECONOMIC EFFECTS OF POSSIBLE TARIFF REDUCTIONS UNDER SECTION 124 OF THE TRADE ACT OF 1974 AND DESIGNATION OF CERTAIN ARTICLES AS ELIGIBLE ARTICLES FOR PURPOSES OF THE GENERALIZED SYSTEM OF PREFERENCES

AGENCY: U.S. International Trade Commission.

ACTION: As a result of a request from the U.S. Trade Representative (USTR) received on October 29, 1980, the Commission has reduced

the scope of Investigation Nos. TA-131(b)-5, TA-503(a)-7, and 332-113 by deleting from the scope of investigation imports of articles provided for in items 161.71 and 700.58 of the Tariff Schedules of the United States. The USTR request indicated that imports of articles provided for in these items were inadvertently included in their initial investigation request to the Commission of August 5, 1980.

SUPPLEMENTARY INFORMATION: The Commission's initial notice of Investigation Nos. TA-131(b)-5, TA-503(a)-7, and 332-113, containing information on investigation coverage, the public hearing, and related information, was published in the Federal Register of August 27, 1980 (45 F.R. 57221). On November 6, 1980, the Commission published a second Federal Register notice (45 F.R. 73827) indicating additional TSUS items to be included in the investigation pursuant to a USTR request of September 24, 1980.

By order of the Commission:

Issued: November 6, 1980.

KENNETH R. MASON,
Secretary.

Investigation No. 303-TA-14 (Final)

PLASTIC ANIMAL IDENTIFICATION TAGS FROM NEW ZEALAND

AGENCY: U.S. International Trade Commission.

ACTION: Institution of a final countervailing duty investigation.

SUMMARY: As a result of the affirmative preliminary determination on October 28, 1980, by the U.S. Department of Commerce that there is a reasonable basis to believe or suspect that benefits are granted by the Government of New Zealand with respect to the manufacture, production, or exportation of plastic animal identification tags which constitute a subsidy within the meaning of the countervailing duty law, the U.S. International Trade Commission (hereinafter the Commission) hereby gives notice of the institution of investigation No. 303-TA-14 (Final) to determine whether an industry in the United States is materially injured, or is threatened with material injury, or the establishment of an industry in the United States is materially retarded, by reason of imports of such merchandise. Since New Zealand is not a country under the agreement, within the meaning of section 701(b) of the Tariff Act of 1930 (herinafter the act), the Commission's investigation is being conducted pursuant to section 303 of the act, as amended by section 103 of the Trade Agreements Act of 1979. For purposes of this investigation, the term "plastic animal identification tags" means plastic animal identification tags, provided for in item 666.00 of the Tariff Schedules of the United

States (TSUS). This investigation will be conducted according to the provisions of part 207 of the Commission's Rules of Practice and Procedure (19 CFR 207, 44 F.R. 76457).

EFFECTIVE DATE: October 28, 1980.

FOR FURTHER INFORMATION CONTACT: Ms. Judith Case, Staff Investigator, Office of Investigations, U.S. International Trade Commission, room 350, 701 E Street NW., Washington, D.C. 20436; telephone 202-523-0339.

SUPPLEMENTARY INFORMATION: On September 15, 1980, the Commission unanimously determined, on the basis of the information developed during the course of investigation No. 303-TA-14 (preliminary), that there is a reasonable indication that an industry in the United States is materially injured, or is threatened with material injury, by reason of imports of plastic animal identification tags from New Zealand, provided for in item 666.00 of the TSUS, upon which a subsidy is allegedly provided. As a result of the Commission's determination, the Department of Commerce (the administering authority) continued its investigation into the question of subsidized sales. Unless the investigation is extended, the final determination by the Department of Commerce of whether subsidies are being provided by the Government of New Zealand will be made not later than January 8, 1981.

WRITTEN SUBMISSIONS: Any person may submit to the Commission a written statement of information pertinent to the subject of this investigation. A signed original and nineteen (19) true copies of each submission must be filed at the Office of the Secretary, U.S. International Trade Commission Building, 701 E Street NW., Washington, D.C. 20436, on or before January 27, 1981. All written submissions, except for confidential business data, will be available for public inspection.

Any submission of business information for which confidential treatment is desired shall be submitted separately from other documents. The envelope and all pages of such submissions must be clearly labeled "Confidential Business Information." Confidential submissions and requests for confidential treatment must conform with the requirements of section 201.6 of the Commission's Rules of Practice and Procedure (19 CFR 201.6).

A staff report containing preliminary findings of fact will be available to all interested parties on January 12, 1981.

PUBLIC HEARING: The Commission will hold a public hearing in connection with this investigation on January 30, 1981, in the hearing room of the U.S. International Trade Commission Building, 701 E

Street NW., Washington, D.C. 20436, beginning at 10 a.m., e.s.t. Requests to appear at the hearing should be filed in writing with the Secretary to the Commission not later than the close of business (5:15 p.m., e.s.t.), January 12, 1981. All persons desiring to appear at the hearing and make oral presentations must file prehearing statements and should attend a prehearing conference to be held at 10 a.m., e.s.t., on January 14, 1981, in room 117 at the U.S. International Trade Commission Building. Prehearing statements must be filed on or before January 27, 1981. For further information concerning the conduct of the investigation, hearing procedures, and rules of general applications, consult the Commission's Rules of Practice and Procedure, part 207, subparts A and C (19 CFR 207), and part 201, subparts A through E (19 CFR 201).

The Commission has waived Commission rule 201.12(d) as amended, Submission of prepared statements, in connection with this investigation. This rule stated that "Copies of witnesses' prepared statements should be filed with the Office of the Secretary of the Commission not later than 3 business days prior to the hearing and submission of such statements shall comply with sections 201.6 and 201.8 of this subpart." It is nevertheless the Commission's request that parties submit copies of witnesses' prepared testimony as early as practicable before the hearing in order to permit Commission review.

This notice is published pursuant to section 207.20 of the Commission's Rules of Practice and Procedure (19 CFR 207.20, 44 F.R. 76458).

By order of the Commission.

Issued: November 7, 1980.

KENNETH R. MASON,
Secretary.

In the Matter of CERTAIN APPARATUS FOR THE CONTINUOUS PRODUCTION OF COPPER ROD	Investigation No. 337-TA-89

Notice of Addition of Respondent

AGENCY: U.S. International Trade Commission.

ACTION: Addition of Phelps Dodge Corp. as a respondent.

SUMMARY: On October 23, 1980, the Commission voted to add the Phelps Dodge Corp. as a respondent in the above-referenced investigation.

SUPPLEMENTARY INFORMATION: This investigation, under section 337 of the Tariff Act of 1930, was instituted by notice published

in the Federal Register on August 13, 1980 (45 F.R. 53923). Southwire Co. of Carollton, Ga., is the complainant in this investigation. Krupp G.m.b.H. of the Federal Republic of Germany and Krupp International, Inc., of Harrison, N.Y., were named as respondents in the August 13 notice of investigation. On October 23, 1980, the Commission voted to issue a temporary exclusion order, having found that there is reason to believe that section 337 is being violated.

FOR FURTHER INFORMATION CONTACT: Jeffrey Neeley, Esq., Office of the General Counsel, U.S. International Trade Commission, 701 E Street NW., Washington, D.C. 20436; telephone 202-523-0359.

By order of the Commission.

Issued: November 7, 1980.

KENNETH R. MASON,
Secretary.

Notice of Termination of Investigations Nos. 701-TA-65, 66, and 67 (Preliminary), Leather Wearing Apparel From Brazil, Korea, and Taiwan

AGENCY: U.S. International Trade Commission.

ACTION: Termination of preliminary countervailing duty investigations.

EFFECTIVE DATE: November 6, 1980.

FOR FURTHER INFORMATION CONTACT: Vera Libeau, Office of Investigations, 202-523-0368.

SUPPLEMENTARY INFORMATION: On October 15, 1980, following receipt of a petition filed by Ralph Edwards Sportswear, Inc., the Commission instituted preliminary countervailing duty investigations Nos. 701-TA-65, 66, 67, and 68, leather wearing apparel from Brazil, Korea, Taiwan, and Uruguay. The purpose of the investigations was to determine whether there is a reasonable indication that an industry in the United States is materially injured, or is threatened with material injury, or the establishment of an industry is materially retarded, by reason of allegedly subsidized imports from Brazil, Korea, Taiwan, and Uruguay of leather wearing apparel, provided for in item 791.76 of the Tariff Schedules of the United States. On November 6, 1980, the Commission received advice from the Department of Commerce that it was initiating an investigation solely with regard to Uruguay. Because Commerce had not initiated an investigation on Brazil, Korea, and Taiwan within the prescribed time limits and because of the request of the petitioner to withdraw

that portion of its petition applying to those three countries, the Commission's investigations concerning leather wearing apparel from Brazil, Korea, and Taiwan are hereby terminated pursuant to its authority under section 207.13 of the Commission's Rules of Practice and Procedure.

Issued: November 10, 1980

KENNETH R. MASON,
Secretary.

Index

U.S. Customs Service

Treasury decisions:

Foreign currencies:

	T.D. No.
Daily certified rates; November 3–7, 1980	80–276
Rates which varied from quarterly rate; November 3–7 1980	80–277
Carriers bond	80–278
Customhouse Cartman's license Revocation	80–279
Synopses of drawback decisions:	
Oil additives, lubricating	80–280–A
Steel roof deck, composite steel deck, consoliform steel-drywell systems	80–280–B
Beverages, canned and bottled carbonated soft drink	80–280–C
Piece goods, bleached, dyed and/or printed	80–280–D
Tricyclazole	80–280–E
Cable connectors	80–280–F
Polyvinyl chloride	80–280–G
Semiconductor wafers, partially and fully fabricated	80–280–H
Memory boards, analytical instruments, computers, terminals, etc	80–280–I
Man-portable communications radios and spares	80–280–J
Cordials, bottled	80–280–K
Jeep built-up vehicles	80–280–L
Lawn mowers, powered and cutting reels	80–280–M
Lanolin, anhydrous	80–280–N
Vitamin B_{12} feed grade	80–280–O
Wheels and parts	80–280–P
Dyes, color	80–280–Q
Titanium bars, billets, and plates	80–280–R
Semiconductor wafers, partially and fully fabricated	80–280–S
Blazer 224L and Blazer 2S	80–280–T
Disc drives	80–280–U
Aluminum capacitor foil	80–280–V
Pigments, organic	80–280–W
Orange juice, canned and chilled	80–280–X
Tires	80–280–Y
Fatty acids, rosins, distilled tall oil	80–280–Z
Sugar, raw	80–280(1)
Sugar, raw	80–280(2)
Reimbursable services—excess cost of preclearance operations	80–281

Customs Service decisions:

Classification:

	C.S.D. No.
Piano/violin imported in deteriorated condition; musical instrument	80–244
Quilting stitching on patch pockets as ornamentation	80–233

Customs Service decisions—Continued
Classification—Continued:
Stationary diesel engines and parts used for agricultural purposes ..... C.S.D. No. 80-241
Tire protection chains with essentially round links; determination of diameter 80-240
Whether cast hose couplings are cast iron for tariff purpose 89-228
Conditionally free merchandise:
Aircraft subassemblies and parts; certification requirement under civil aircraft agreement 80-242
Worn merchandise; tires imported for retreading; civil aircraft agreement 80-249
Cost of production/constructed value:
Dutiability of interest expense where no interest is charged 80-226
Country of origin marking:
Digital pen watches imported without proper markings, but allegedly for personal use 80-232
Electrical conduit couplings 80-236
Exception from making for semiconductor chips arriving in properly marked containers; substantial transformation 80-227
Frozen orange juice concentrate of U.S. origin repacked in Canada 80-230
Drawback:
Applicability to duty paid for assists on entry not designated for drawback 80-245
Entry:
Fixed structure drilling platform and production platform affixed to Outer Continental Shelf 80-235
Export value:
Dutiability of wharfage and handling charges 80-229
Falsely marked articles in properly marked containers 80-237
Generalized system of preferences:
Cost of materials used in manufacturing process as direct cost of processing operations 80-243
Substantial transformation and direct costs of processing operations 80-246
Instruments of international traffic:
Diversion to point-to-point local traffic; section 1041a(d) Customs Regulation 80-231
Reliquidation:
Negligent inaction by importer's employee; applicability of section 520(c)(1), Tariff Act of 1930, as amended 80-250
Temporary importation under bond:
Whether repacking a bulk product into small containers constitutes processing under item 864.05, TSUS 80-234
Value:
Foreign inland freight charges as part of transaction value 80-238
Whether prices to related selected purchaser fairly reflect market value; sufficiency of evidence; determination by appraising officer 80-247

Customs Service decisions—Cantined
Vessel control:
Operation of U.S.-built, foreign registered dredge and support vessels in U.S. waters ..... C.S.D. No. 80-239
Use of vessels of less than 5 tons in the fisheries; 46 U.S.C. 251 80-248

Court of International Trade

Articles of iron or steel, not coated or plated with precious metal: * * * Other articles * * * Other, Slip Op. 80-1
Basket provision v. provision for parts; classification, Slip Op. 80-1
Classification:
Basket provision v. provision for parts, Slip Op. 80-1
TSUS item 661.30 v. TSUS item 661.70, Slip Op. 80-1
Construction:
Tariff Schedules of the United States:
General Headnotes and Rules of Interpretation, rule 10(ij), Slip Op. 80-1
Item 657.20, Slip Op. 80-1
Item 661.30, Slip Op. 80-1
Item 661.70, Slip Op. 80-1
Hood exhaust system, parts of; part of a part, Slip Op. 80-1
Hood systems; industrial and laboratory furnaces and ovens, nonelectric and parts thereof, Slip Op. 80-1
Industrial and laboratory furnaces and ovens, nonelectric and parts thereof; hood systems, Slip Op. 80-1
Industrial machinery, plant, and similar laboratory equipment, other, Slip Op. 80-1
Legislative history; Tariff Classification Study, 1960; schedule 6, p. 263, Slip Op. 80-1
Part of a part; hood exhaust system, parts of, Slip Op. 80-1
TSUS item 661.30 v. TSUS item 661.70; classification, Slip Op. 80-1

U.S. GOVERNMENT PRINTING OFFICE: 1980

Jt 333-194/Item 950-D T 1.11/3:14/50
contin 8

Customs Bulletin

C-378

Regulations, Rulings, Decisions, and Notices concerning Customs and related matters

and Decisions

of the United States Court of Customs and Patent Appeals and the United States Customs Court

9247

Vol. 14 DECEMBER 10, 1980 No. 50

This issue contains

T.D. 80–282 through 80–284
General Notice
Proposed Rulemaking
Slip Op. 80–2
Protest abstracts P80/176 through P80/181
Reap. abstracts R80/341 through R80/343
International Trade Commission Notices

THE DEPARTMENT OF THE TREASURY
U.S. Customs Service

NOTICE

The abstracts, rulings, and notices which are issued weekly by the U.S. Customs Service are subject to correction for typographical or other printing errors. Users may notify the U.S. Customs Service, Logistics Management Division, Washington, D.C. 20229, of any such errors in order that corrections may be made before the bound volumes are published.

For sale by the Superintendent of Documents, U.S. Government Printing Office, Washington, D.C. 20402. Price: $2.25 (single copy domestic); $2.85 (single copy foreign). Subscription price: $85.00 a year domestic; $106.25 a year foreign.

U.S. Customs Service

Treasury Decisions

(T.D. 80–282)

Bonds

Approval and discontinuance of bonds on Customs form 7587 for the control of instruments of international traffic of a kind specified in section 10.41a of the Customs Regulations

Bonds on Customs form 7587 for the control of instruments of International traffic of a kind specified in section 10.41a of the Customs Regulations have been approved or discountinued as shown below. The symbol "D" indicates that the bond previously outstanding has been discontinued on the month, day, and year represented by the figures which follow. "PB" refers to a previous bond, dated as represented by the figures in parentheses immediately following which has been discontinued. If the previous bond was in the name of a different company or if the surety was different, the information is shown in a footnote at the end of the list.

Dated: November 20, 1980.

Name of principal and surety	Date of bond	Date of approval	Filed with district director/area director/amount
Airline Marketing Services, Inc., 15481 West 110th St., Lenexa, KS; Old Republic Ins. Co.	Sept. 19, 1980	Sept. 22, 1980	Los Angeles, CA $50,000
Allied Engineering Co., 230 Park Ave., NY, NY; Old Republic Ins. Co.	Aug. 29, 1980	Sept. 2, 1980	New York, NY $10,000
B. R. Anderson & Co., 1000 Second Ave., Rm 800, Seattle, WA; Investors Ins. Co. of America D 9/23/80	Sept. 24, 1979	Oct. 4, 1979	Seattle, WA $10,000
J. C. Brock Corp., 95 Kentucky St., Buffalo, NY; Employers Insurance of Wausau (PB 8/15/79) D 11/4/80 [1]	Oct. 6, 1980	Nov. 4, 1980	Buffalo, NY $10,000

Name of principal and surety	Date of bond	Date of approval	Filed with district director/area director/amount
CATU Containers, 300 E. 42nd St., New York, NY; Old Republic Ins. Co.	Oct. 22, 1980	Oct. 28, 1980	San Francisco, CA $20,000
Compagnie Generale Trans Baltique (Ro Lo Pacific Lines), 100 California St., San Francisco, CA; The Continental Ins. Co.	Oct. 10, 1980	Oct. 14, 1980	San Francisco, CA $10,000
Container Pool Inc., 1 World Trade Center, New York, NY; Peerless Ins. Co. D 9/22/80	Nov. 19, 1974	Nov. 19, 1974	New York, NY $10,000
Furness Interocean Corp., 465 California St., Rm. 1001, San Francisco, CA; Old Republic Ins. Co. D 2/2/79	Dec. 1, 1978	Dec. 7, 1978	San Francisco, CA $10,000
Furness Interocean Corp., 444 W. Ocean Blvd., Long Beach, CA; St. Paul Fire & Marine Ins. Co.	Jan. 29, 1980	Feb. 2, 1979	Los Angeles, CA $50,000
G.P. Industries Inc. and its subs: Gas Products Corp., Eastern Gas Products Corp., Carbonic Corp., Western Gas Products Corp., Northern Gas Products Corp., Central Medical Products Corp., Western Medical Products Corp., Island Gas, Inc.; 306 Ponce de Leon Ave., Hato Rey, PR; Antilles Ins. Co. (PB 6/24/77) D 8/14/80 [2]	Oct. 16, 1980	Oct. 21, 1980	San Juan, PR $10,000
Hartog Foods International Inc., 515 Madison Ave., New York, NY; Old Republic Ins. Co. D 9/27/80	Sept. 28, 1979	Oct. 3, 1979	Seattle, WA $10,000
Matson Navigation Co., 333 Market St., San Francisco, CA; St. Paul Fire & Marine Ins. Co.	Aug. 15, 1974	Aug. 15, 1974	San Francisco, CA $10,000
Northwest Net and Twine, Inc., 1064 E. Pole Rd., Everson, WA; Washington International Ins. Co. D 10/18/80	Oct. 19, 1976	Oct. 20, 1976	Seattle, WA $10,000
Overseas Shipping Co., 1 California St., San Francisco, CA; St. Paul Fire & Marine Ins. Co.	Aug. 4, 1980	Aug. 20, 1980	San Francisco, CA $50,000
Pérez & Cia. de Puerto Rico, P.O. Box 10084, Santurce, PR; Puerto Rican American Ins. Co.	Sept. 26, 1980	Sept. 26, 1980	San Juan, PR $25,000
Puerto Rican Cement Co., Inc., Chase Manhattan Bank Bldg., Hato Rey, PR; New Hampshire Ins. Co. (PB 10/31/79) D 10/25/80 [3]	Aug. 25, 1980	Oct. 25, 1980	San Juan, PR $10,000
Ontario Paper Co., Ltd. and its subs: QNS Paper Co., Ltd., 80 King St., P.O. Box 3026, St. Catharines, Ontario; Insurance Co. of North America (PB 10/1/77) D 10/1/80 [4]	Sept. 18, 1980	Oct. 1, 1980	Buffalo, NY $10,000
Rothery Storage and Van Co., 1525 Chase Ave., Elk Grove Village, IL.; Mid-Century Ins. Co.	July 16, 1980	Aug. 11, 1980	Chicago, IL $10,000

Name of principal and surety	Date of bond	Date of approval	Filed with district director/area director/amount
Santa Fe Engineering & Construction Co., Inc., 505 S. Main St., Santa Ana, CA; St. Paul Fire & Marine Ins. Co.	Oct. 27, 1980	Oct. 29, 1980	New Orleans, LA $10,000
Star Nederland B.V., 3529 Whitebrook Plaza, Memphis, TN; St. Paul Fire & Marine Ins. Co.	Sept. 25, 1980	Sept. 25, 1980	New Orleans, LA $10,000

[1] Surety is Liberty Mutual Ins. Co.
[2] Principal is Gas Products Corp.; Surety is Puerto Rican American Ins. Co.
[3] Principal is Puerto Rican Cement Co.
[4] Principal is the Ontario Paper Co., Ltd.; Surety is St. Paul Fire & Marine Ins. Co.

BON-3-10

GEORGE C. STEUART
(For Marilyn G. Morrison, Director,
Carriers, Drawback and Bonds Division).

(T.D. 80-283)

Foreign Currencies—Daily Rates For Countries Not on Quarterly List

Rates of exchange based on rates certified to the Secretary of the Treasury by the Federal Reserve Bank of New York for the Brazil cruzeiro, People' Republic of China yuan, Hong Kong dollar, Iran rial, Philippines peso, Singapore dollar, Thailand baht (tical), and Venezuela bolivar

The Federal Reserve Bank of New York, pursuant to section 522(c), Tariff Act of 1930, as amended (31 U.S.C. 372(c)), has certified buying rates for the dates and foreign currencies shown below. The rates of exchange, based on these buying rates, are published for the information and use of Customs officers and others concerned pursuant to part 159, subpart C, Customs Regulations (19 CFR 159, subpart C).

Brazil cruzeiro:	
November 10-12, 1980	$0.0167
November 13-14, 1980	.0163
People's Republic of China yuan:	
November 10, 1980	$0.652869
November 11, 1980	Holiday
November 12-14, 1980	.661463
Hong Kong dollar:	
November 10, 1980	$0.196271
November 11, 1980	Holiday
November 12, 1980	.196463

November 13, 1980	.195867
November 14, 1980	.195810
Iran rial:	
November 10–14, 1980	Not available
Philippines peso:	
November 10–14, 1980	$0.1324
Singapore dollar:	
November 10, 1980	$0.479962
November 11, 1980	Holiday
November 12, 1980	.477327
November 13, 1980	.478469
November 14, 1980	.478011
Thailand baht (tical):	
November 10–14, 1980	$0.0485
Venezuela bolivar:	
November 10–13, 1980	$0.2328
November 14, 1980	.2329

(LIQ-3-01 O:C:E)

Dated: November 14, 1980.

NANCY I. BROWN,
Chief,
Customs Information Exchange.

(T.D. 80-284)

Foreign Currencies—Variances From Quarterly Rate

The following rates of exchange are based upon rates certified to the Secretary of the Treasury by the Federal Reserve Bank of New York, pursuant to section 522(c), Tariff Act of 1930, as amended (31 U.S.C. 372(c)), and reflect variances of 5 per centum or more from the quarterly rate published in T.D. 80-249 for the following countries. Therefore, as to entries covering merchandise exported on the dates listed, whenever it is necessary for Customs purposes to convert such currency into currency of the United States, conversion shall be at the following rates:

Austria schilling:	
November 10–11, 1980	$0.072860
November 12–13, 1980	Quarterly
November 14, 1980	.074184

Belgium franc:	
November 10–11, 1980	$0.032658
November 12, 1980	.032765
November 12, 1980	Quarterly
November 14, 1980	.032712
Germany deutsche mark:	
November 14, 1980	$0.524934
Ireland pound:	
November 10–11, 1980	$1.9640
November 12, 1980	1.9630
November 13, 1980	1.9680
November 14, 1980	1.9580
Netherlands guilder:	
November 12, 1980	$0.483793
Sri Lanka rupee:	
November 10–14, 1980	$0.58140

(LIQ-3-01 O:C:E)

Dated: November 14, 1980.

NANCY I. BROWN,
Chief,
Customs Information Exchange.

U.S. Customs Service

General Notice

(521854)

Three-wheel all-terrain vehicles; change of practice considered; 19 CFR, part 177

AGENCY: U.S. Customs Service, Department of the Treasury.

ACTION: Proposed change of practice.

SUMMARY: This document gives notice that the Customs Service is reviewing a uniform and established practice concerning the classification of three-wheel all-terrain vehicles. The Customs Service currently classifies the subject vehicles under the provision for other motor vehicles (except motorcycles) for the transport of persons or articles in item 692.10, Tariff Schedules of the United States (TSUS). The proposed change of practice would result in the reclassification of these vehicles under the provision for motorcycles in item 692.50, TSUS.

DATES: Comments (preferably in triplicate) must be received on or before: (30 days from the date of publication of this notice in the Federal Register).

ADDRESS: Comments should be addressed to the Commissioner of Customs, attention: Regulations and Research Division, 1301 Constitution Avenue NW., Washington, D.C. 20229.

FOR FURTHER INFORMATION CONTACT: Leonard J. Emmert, Classification and Value Division, U.S. Customs Service, 1301 Constitution Avenue NW., Washington, D.C. 20229; 202-566-8181.

SUPPLEMENTARY INFORMATION:

BACKGROUND

In a Headquarters ruling dated July 15, 1970, file No. 005618, a three-wheeled all-terrain vehicle, which resembled a motorcycle with two rear wheels, was held to be classifiable under the provision for other motor vehicles (except motorcycles) for the transport of persons or articles in item 692.10, Tariff Schedules of the United States

(TSUS). That ruling was circularized to all ports, and all importations of vehicles of the kind in question have been classified in conformity therewith, resulting in a uniform and established practice within the meaning of 19 U.S.C. 1315(d). The subject vehicles utilize a handlebar for steering and have a seat that is straddled by the driver who is not enclosed in the vehicle. Generally, balloon-type tires permit the vehicles to travel on all types of terrain. In 1978 a ruling was issued, however, indicating that these are motorcycles.

The Customs Service notes that the Brussels Nomenclature, Heading 87.09, section XVII (1975), indicates that three-wheeled vehicles of the kind in question are classifiable as motorcycles. Further, it is noted that regulation VESC–11 of the Vehicle Equipment Safety Commission defines a motorcycle as a two-wheel or three-wheel vehicle with motive power, a singular front steering road wheel mounted in a fork assembly which passes through a frame steering bearing, and to which is attached a handlebar assembly, and which has no enclosure for the driver with the exception of a windshield, if so, equipped.

PROPOSED CHANGE OF PRACTICE

An eo nomine provision for an article, such as the provision for motorcycles, without limitations or shown contrary legislative intent, judicial decision, or administrative practice to the contrary, and without proof of commercial designation, will include all forms of such article. *Nootka Packing Co.* v. *United States*, 22 C.C.P.A. 464, T.D. 47464 (1935). In view of this principle, and in light of the definitions enunciated above, the Customs Service proposes to change the current uniform and established practice of classifying three-wheeled all-terrain vehicles of the kind in question under item 692.10, TSUS. The Customs Service proposes that the subject vehicles be reclassified as motorcycles under item 692.50, TSUS.

AUTHORITY

Inasmuch as the proposed change of practice will affect the assessed duties on the subject vehicles, the Customs Service is giving this notice and opportunity to comment in accordance with section 315(d) of the Tariff Act of 1930, as amended (19 U.S.C. 1315(d)), and section 177.10(c)(1) of the Customs Regulations (19 CFR 177.10 (c)(1)).

Consideration will be given to any written comments submitted in writing to the Commissioner of Customs. Comments submitted will be available for public inspection in accordance with section 103.8(b), Customs Regulations (19 CFR 103.8(b)), during regular business hours at the Regulations and Research Division, Head-

quarters, room 2426, U.S. Customs Service, 1301 Constitution Avenue NW., Washington, D.C. 20229.

DRAFTING INFORMATION

The principal author of this notice was Harold I. Loring, Regulations and Research Division, U.S. Customs Service. However, personnel from other offices of the U.S. Customs Service participated in developing this notice, both on matters of style and substance.

Approved: November 17, 1980.

WILLIAM T. ARCHEY,
for Commissioner of Customs.

RICHARD J. DAVIS,
Assistant Secretary of the Treasury.

[Published in the Federal Register, Nov. 28, 1980(45 F.R. 79221)]

U.S. Customs Service

Proposed Rulemaking

(19 CFR Part 12)

Special Classes of Merchandise

AGENCY: U.S. Customs Service, Department of the Treasury.

ACTION: Proposed rule.

SUMMARY: This document proposes to inform the importing public about the Toxic Substances Control Act (TSCA) and to amend the Customs Regulations to regulate the entry of any chemical substance, imported in bulk or as part of a mixture, or article containing a chemical substance or mixture into the Customs territory of the United States. The proposed amendments, which have been developed after consultation with the Environmental Protection Agency (EPA), are designed to implement TSCA by requiring the importer of a chemical shipment to certify at the port of entry that the shipment is in compliance with TSCA and all rules and orders under TSCA.

DATE: Comments must be received on or before (90 days after publication in the Federal Register).

ADDRESS: Comments may be addressed to the Commissioner of Customs, attention, Regulations and Research Division, U.S. Customs Service, 1301 Constitution Avenue NW., room 2426, Washington, D.C. 20229.

FOR FURTHER INFORMATION CONTACT: Harrison C. Feese, Entry Examination and Liquidation Branch, Duty Assessment Division, Office of Trade Operations, U.S. Customs Service, 1301 Constitution Avenue NW., Washington, D.C. 20229, 202–566–8651; or Industry Assistance Office (TS 799), Office of Pesticides and Toxic Substances, Environmental Protection Agency, 401 M Street SW., Washington D.C. 20460, 800–424–9065 (toll free); calls within the District of Columbia, 554–1404.

SUPPLEMENTARY INFORMATION:

BACKGROUND

The Toxic Substances Control Act (TSCA), Public Law 94–469, approved October 11, 1976, was enacted by the Congress to regulate commerce and protect human health and the environment by requiring testing and necessary use restrictions on certain chemical substances and for other purposes. Section 13, TSCA, directs the Secretary of the Treasury, after consultation with the Administrator, Environmental Protection Agency (EPA), to refuse entry into the Customs territory of the United States (the Customs territory) of any chemical substance, mixture, or article containing a chemical substance or mixture that:

1. Fails to comply with any rule in effect under TSCA, or
2. Is offered for entry in violation of section 5 or 6, TSCA, a rule or order issued under section 5 or 6, or an order issued in a civil action brought under section 5 or 7, TSCA.

Section 13 further provides that if a chemical substance, mixture or article is refused entry, the Secretary shall notify the consignee of the entry refusal, not release the shipment to the consignee, except under bond, and cause its disposal or storage under such rules as the Secretary may prescribe if the shipment has not been exported by the consignee within 90 days from the date of receipt of the notice of entry refusal.

To implement the provisions of section 13, Customs and EPA have developed proposed amendments to parts 12 and 127, Customs Regulations (19 CFR parts 12, 127), to regulate the entry of any chemical substance, imported in bulk or as part of a mixture, or an article containing a chemical substance or mixture into the Customs territory.

REPORTING REQUIREMENTS

Importer certification

Proposed section 12.121, Customs Regulations, would require each importer of a chemical substance, mixture, or article containing a chemical substance or mixture subject to a specific regulation under TSCA, to certify to the District Director of Customs at the port of entry that the shipment is in full compliance with TSCA and all rules and orders under TSCA. The certification would appear as a signed statement: (1) On the entry summary document, or, for those entries which do not have entry summaries, on the appropriate entry document; or (2) in the event of release under a special permit for an immediate delivery, as provided for in section 142.21, Customs Regulations, or entry, as provided for in section 142.3, Customs Regulations either on the importer's invoice or an attachment to the invoice, or (3) on the Special Chemical Import Report Form, if the importer is required to submit this form, as explained below.

By signing the certification statement, the importer certifies the following:

1. The shipment is in compliance with the premanufacture notification requirements of section 5, TSCA, which provide that, unless exempted by the Administrator, EPA, a person must notify the Administrator at least 90 days before manufacture, importing, or processing, if the person intends to:

(a) manufacture or import for a commerical purpose a new chemical substance (one not included on the inventory compiled pursuant to section 8(b), TSCA), or

(b) manufacture, import, or process any chemical substance for a use which the Administrator has determined, by rule, is a significant new use. (No significant new use rules have been promulgated to date.)

EPA's initial Toxic Substances Control Act Chemical Substances Inventory was issued on June 1, 1979, and the premanufacture notification requirements for chemical substances imported in bulk became effective on July 1, 1979. For chemical substances as part of mixtures, premanufacture notification requirements will begin 30 days after publication of the EPA's Revised Inventory. Until 30 days after publication of the Revised Inventory, importers can report chemicals which are not included on EPA's Initial Inventory and that they import as part of a mixture or article for the first time after December 31, 1979. These chemicals will be included on EPA's Revised Inventory.

2. The shipment does not violate any rule in effect under TSCA or any rule or order issued under sections 5, 6, or 7, TSCA. These rules or orders may pertain to limitations under section 5 (e) or (f) on importing new chemical substances or chemical substances to be imported for a significant new use, chemical control regulations under section 6, or judicial orders under section 7.

3. All required information submittals are complete and accurate.

Special chemical import report form

To enforce TSCA, in certain cases EPA may require information beyond the importer's certification. Proposed section 12.121(b) provides that if required by the Administrator by rule under TSCA for a chemical substance, the importer shall submit an EPA Special Chemical Import Report Form to the District Director at the port of entry. This form would certify that the shipment is in compliance with TSCA and all rules developed under TSCA, and would also require certain information such as amount imported, intended use, distribution, disposal, exposure, or other information, as required by a rule under TSCA.

To date, EPA has not issued any rules which would require the submission of a Special Chemical Import Report Form. EPA plans to develop the form as the need to control imports of specific chemicals arises. When developed, the form will be subject to clearance and

333-194 O - 80 - 2

approval of the Office of Management and Budget and EPA will provide notice and an opportunity for public comment.

Alternatives to importer certification considered

EPA and Customs considered other alternatives to requiring importer certification of compliance with TSCA, recognizing that some importers may not have complete information about their chemical shipments. In some cases, the foreign exporter is not the chemical manufacturer. In other cases, the foreign manufacturer may be reluctant to divulge specific information regarding the shipment.

The most direct way to secure this information would be to require the exporter to submit the necessary data. However, neither TSCA nor any other law authorizes EPA or Customs to place such requirements directly upon the foreign exporter. The responsibility of reporting must be on the importer.

EPA also considered requiring the importer to submit detailed reports, including the chemical identity and trade names of the merchandise. These reports could provide a more thorough information base on which to make decisions regarding chemical importations. EPA is not proposing this option, however, for several reasons. The initial problem that importers would face in securing general information about chemical shipments would most likely escalate if importers asked for specific chemical information such as processing specifications or the proportions of a chemical substance in a mixture.

Even if importers could provide specific chemical information, much of it would not be useful because most Customs officials are not trained to interpret chemical reports and would not have time to check long trade names against lists cross-referenced with regulated chemicals. It also would be nearly impossible for EPA to develop a useful trade name list because of the number of countries producing chemicals, the number of individual foreign manufacturers and processors, and the constant need to update the list.

EPA and Customs view the proposed regulations as the most reasonable and least burdensome approach to monitoring imported chemical shipments. An economic impact report, "Economic Impact Assessment of the Section 13 Importer Regulations of the Toxic Substances Control Act" (see below), analyzes the private sector costs of various means of providing importer certification. The proposed regulations appear to be the most feasible approach. Also, by asking the foreign exporter and/or manufacturer about compliance with TSCA, the importer would be educating the foreign chemical market about U.S. requirements for chemical importation. This education process should facilitate overall achievement of TSCA objectives. Eventually, the proposed reporting system could be

amended to reflect change or development in international import agreements.

DETENTION OF SHIPMENTS

Under TSCA, EPA is authorized to control chemical substances found to pose an unreasonable risk to human health or the environment. Sections 5 and 6, TSCA, permit the Administrator to issue a rule or order to prohibit or limit the manufacture, processing, distribution in commerce, use, or disposal of a chemical substance. Under section 7, TSCA, the Administrator may commence a civil action in a U.S. district court for seizure of an imminently hazardous chemical substance or mixture or any article containing such a substance or mixture. To minimize any risk to health or the environment, proposed section 12.122(a) provides that the District Director at the port of arrival shall detain, at the importer's risk and expense, shipments of chemical substances, mixtures, or articles: (1) Which have been banned from the customs territory by a rule or order issued under sections 5 or 6, TSCA; or (2) which have been ordered seized because of imminent hazard pursuant to section 7, TSCA; or (3) as otherwise directed by the Administrator.

Proposed section 12.122(b) provides for detention of a chemical shipment at the port of entry, at the importer's risk and expense, whenever: (1) The importer fails to certify compliance with TSCA; or (2) the Administrator, after giving notice with reasons to the importer, notifies the District Director to detain the shipment; or (3) the District Director has reasonable grounds to believe that the shipment is not in compliance with TSCA or any regulations and orders issued under TSCA. In the event of detention, the District Director will promptly notify the importer and the Administrator and explain the reasons for detention.

PROCEDURE AFTER DETENTION

Submission of written documentation

Proposed section 12.123 provides that the importer may submit written documentation to the Administrator, with a copy to the District Director at the port of entry, within 20 days from the date of the notice of detention to show cause why the shipment should not be refused entry. The importer may also obtain custody of the detained shipment by furnishing a Customs bond for the return of the shipment to Customs custody.

Determination by the administrator

The Administrator, after consideration of the available evidence and within 30 days from the notice of detention, will determine whether the detained shipment complies with TSCA. If the Ad-

ministrator finds that the shipment is in compliance, the District Director shall release the shipment to the importer. If the Administrator finds that the shipment is not in compliance, the District Director shall either refuse to deliver the shipment to the importer and explain the reasons for this refusal, or, if the shipment has been released on bond, demand the redelivery of the shipment under the terms of the bond and explain the reasons for this demand.

Time limitations

Proposed section 12.124 provides that the importer of a detained shipment shall bring the shipment into compliance with TSCA or remove it from the Customs territory within 90 days after notice of detention or 30 days after demand for redelivery, whichever comes first. The District Director, upon notification by the Administrator, may grant a 30-day extension if the importer is unable to bring the merchandise into compliance with TSCA or remove it from the Customs territory within the required time period due to delays caused by EPA or Customs.

NOTICE OF INTENT TO ABANDON OR EXPORT A DETAINED SHIPMENT

If a shipment does not comply with TSCA, the importer may abandon or export it. Under proposed section 12.126, if the importer decides to abandon the shipment, written notice of intent to abandon must be presented to the District Director and the Administrator. By submission of this certification, the importer waives any right to export the shipment and the importer remains liable for any expenses incurred in the storage and/or, disposal of the merchandise. Under proposed section 12.125, if the importer decides to export the shipment, written notice of exportation must be presented to the District Director and the Administrator.

Storage or disposal of shipments

Under proposed section 12.127, a detained shipment shall be considered to be unclaimed and abandoned and shall be stored or disposed of by the Administrator if the importer has not brought the shipment into compliance within the required time period and any extension specified in proposed section 12.124, and (1) has not exported the shipment within the required time period and any extension specified in proposed section 12.124, or (2) has certified intent to abandon the shipment.

AUTHORITY

This amendment is proposed under the authority of section 13, 90 Stat. 2034 (15 U.S.C. 2612), R.S. 251, as amended (19 U.S.C. 66), and section 624, 46 Stat. 759 (19 U.S.C. 1624).

COMMENTS

Before adopting this proposal, consideration will be given by EPA and Customs to any written comments, preferably in quadruplicate, submitted timely to the Commissioner of Customs. Comments submitted will be available for public inspection in accordance with section 103.8(b), Customs Regulations (19 CFR 103.8(b)), during regular business hours at the Regulations and Research Division, Headquarters, U.S. Customs Service, 1301 Constitution Avenue NW., room 2426, Washington, D.C. 20229. Comments will also be available for public inspection from 8 a.m. to 4 p.m. at the Environmental Protection Agency, Office of Pesticides and Toxic Substances, reading room, 447 East Tower, 401 M Street SW., Washington, D.C. 20460, as part of EPA docket No. OPTS 3000.

ECONOMIC IMPACT ANALYSIS STATEMENT

Estimated costs for industry compliance with this regulation are contained in a report entitled, "Economic Impact Assessment of the Section 13 Importer Regulations of the Toxic Substance Control Act," dated November 1979. This report indicates that total cost to industry will be approximately $2.3 million.

The economic impact study is available for review at the Environmental Protection Agency, Office of Pesticides and Toxic Substances, reading room, 447 East Tower, 401 M Street SW., Washington, D.C. 20460.

INAPPLICABILITY OF EXECUTIVE ORDER 12044

This document is not subject to the Treasury Department directive implementing Executive Order 12044, "Improving Government Regulations," because the regulation was in process before May 22 1978, the effective date of the directive.

EPA has determined that this document does not contain a major proposal requiring preparation of a regulatory analysis under Executive Order 12044.

DRAFTING INFORMATION

The principal author of this document was Laurie Strassberg Amster, Regulations and Research Division, Office of Regulations and Rulings, U.S. Customs Service. However, personnel from other Customs and EPA offices participated in its development.

PROPOSED AMENDMENTS

PART 12—SPECIAL CLASSES OF MERCHANDISE

It is proposed to amend part 12, Customs Regulations (19 CFR Part 12), by adding new sections 12.118 through 12.127 to read as follows:

CHEMICAL SUBSTANCES IN BULK AND AS PART OF MIXTURES AND ARTICLES

12.118 Toxic Substances Control Act.

The importation into the customs territory of the United States of a chemical substance in bulk or as part of a mixture or article is governed by the Toxic Substances Control Act (TSCA) (15 U.S.C. 2601 et seq.), and by regulations issued under the authority of section 13(b), TSCA (15 U.S.C. 2612(b)) by the Secretary of the Treasury in consultation with the Administrator, Environmental Protection Agency (EPA).

12.119 Scope.

Sections 12.120 through 12.127 apply to the importation into the customs territory of the United States of chemical substances in bulk and as part of mixtures under TSCA.

Sections 12.120 through 12.127 may also apply to articles containing a chemical substance or mixture if so required by the Administrator by specific rule under TSCA.

12.120 Definitions.

Except as otherwise provided below, the terms used in sections 12.121 through 12.127 have the meanings set forth for those terms in TSCA.

(a) Article

(1) Article means a manufactured item which:

(i) Is formed to a specific shape or design during manufacture,

(ii) Has end use function(s) dependent in whole or in part upon its shape or design during end use, and

(iii) Has either no change of chemical composition during its end use or only those changes of composition which have no commercial purpose separate from that of the article and that may occur as described in subsection 12.120 (a)(2) below; except that fluids and particles are not considered articles, regardless of shape or design.

(2) The allowable changes of composition, referred to in subsection 12.120(a)(1), are those which result from a chemical reaction that occurs upon end use of other chemical substances, mixtures, or articles such as adhesives, paints, miscellaneous cleaners or other household products, fuels and fuel additives, water softening and treatment agents, photographic films, batteries, matches, and safety flares in which the chemical substance manufactured upon end use of the article is not itself manufactured for distribution in commerce or for use as an intermediate.

(b) Chemical substance in bulk form means a chemical substance (other than as part of a mixture or article) in containers used for purposes of transportation or containment, provided that the chemical substance is intended to be removed from the container and has an end use or commercial purpose separate from the container.

12.121 Reporting Requirements.

(a) *All chemical substances in bulk or mixtures.*—The importer of a chemical substance, imported in bulk or as part of a mixture, shall certify to the District Director at the port of entry that the chemical shipment is in compliance with TSCA and all rules and orders under TSCA. The importer shall make this certification by signing the following statement:

> I certify that all chemical substances in this shipment comply with all rules under TSCA and that I am not offering a chemical substance for entry in violation of TSCA or any rule or order under TSCA.

This certification shall appear as a typed statement

(1) On the entry summary document, or, for those entries which do not have entry summaries, on the appropriate entry document, or

(2) In the event of release under a special permit for an immediate delivery, as provided for in section 142.21 of this chapter, or entry, as provided for in section 142.3 of this chapter, either on the importer's invoice or an attachment to the invoice, or

(3) On the Special Chemical Import Report Form, if the importer is required to submit this form as provided for in paragraph (b) of this section.

(b) *Certain regulated chemical substances.*—If specifically required by the Administrator by rule under TSCA, each importer of a chemical substance, imported in bulk or as part of a mixture, shall submit an EPA Special Chemical Import Report Form to the District Director at the port of entry.

(c) *Chemical substance or mixture as part of articles.*—Each importer of a chemical substance or mixture as part of an article shall meet the reporting requirements set forth in paragraph (a) and (b) of this section only if required by a rule or order under TSCA.

12.122 Detention of Certain Shipments.

(a) The District Director at the port of arrival shall detain, at the importer's risk and expense, shipments of chemical substances, mixtures, or articles:

(1) Which have been banned from the customs territory of the United States by a rule or order issued under sections 5 or 6 of TSCA (15 U.S.C. 2604 or 2605); or

(2) Which have been ordered seized because of imminent hazard as specified under section 7 of TSCA (15 U.S.C 2606); or

(3) As otherwise directed by the Administrator.

(b) The District Director at the port of entry shall detain shipments of chemical substances mixtures, or articles at the importer's risk and expense, in the following situations:

(1) Whenever the Administrator has reasonable grounds to believe that the shipment is not in compliance with TSCA, gives detention notice with reasons to the importer, and notifies the District Director to detain the shipment; or

(2) Whenever the District Director has reasonable grounds to believe that the shipment is not in compliance with TSCA; or

(3) Whenever the importer fails to certify compliance with TSCA as required by section 12.121.

Upon detention of a shipment, the District Director shall give prompt notice to the Administrator and the importer. The notice shall include the reasons for detention.

12.123 Procedure After Detention.

(a) *Submission of written documentation.*—If a shipment is detained by a District Director under section 12.122, the importer may submit written documentation to the Administrator with a copy to the District Director within 20 days from the date of notice of detention to show cause why the shipment should not be refused entry.

(b) *Release on bond.*—The District Director may release to the importer a shipment detained for any of the reasons given in section 12.122 when the District Director has reasonable grounds to believe that the shipment may be brought into compliance, or when the District Director deems it appropriate under section 141.66 of this chapter. Any such release shall be conditioned upon furnishing a bond on Customs form 7551, 7553, or 7595 for the return of the shipment to Customs custody. The bond shall be for the full amount required in section 113.14 of this chapter. If a shipment of a chemical substance, mixture, or article is released to the importer under bond, the shipment shall be held intact and shall not be used or otherwise disposed of until the Administrator makes a final determination on entry as provided for in paragraph (c) of this section.

(c) *Determination by the Administrator.*—After consideration of the available evidence and within 30 days from the notice of detention, the Administrator shall notify the District Director of his decision to either permit or refuse entry of the shipment. If the Administrator finds that the shipment is in compliance with TSCA, the District Director shall release the shipment to the importer. If the Administrator finds that the shipment is not in compliance, the District Director shall:

(1) Refuse delivery to the importer, with reasons for such refusal, or

(2) If the shipment has been released on bond, demand its redelivery under the terms of the bond, giving reasons for such demand. If the merchandise is not redelivered within 30 days from the date of the redelivery notice, the District Director shall assess liquidated damages in the full amount of the bond.

12.124 Time Limitations and Extensions.

(a) *Time limitations.*—The importer of a shipment of chemical substances, mixtures, or articles which has been detained under

section 12.122 shall bring the shipment into compliance with TSCA or export the shipment from the customs territory of the United States within 90 days after notice of detention or 30 days of demand for redelivery, whichever comes first.

(b) *Time extensions.*—The District Director, upon notification by the Administrator, may grant an extension of not more than 30 days if, due to delays caused by the Environmental Protection Agency or the Customs Service:

(1) The importer is unable, for good cause shown, to bring a shipment into compliance with the act within the required time period; or

(2) The importer is unable to export the shipment from the customs territory of the United States within the required time period.

12.125 Notice of Exportation.

Whenever the Administrator directs the District Director to refuse entry under section 12.123 and the importer exports the noncomplying shipment within the 90-day period of notice of refusal of entry or within 30 days of demand for redelivery, the importer shall give written notice of the fact of exportation to the Administrator and the District Director.

The importer shall include the following information in the notice of exportation:

(a) The name and address of the exporter or his agent;

(b) A description of the chemical substances, mixtures, or articles exported;

(c) The destination (country);

(d) The port of arrival at the destination;

(e) The carrier;

(f) The date of exportation; and

(g) The bill of lading or the air waybill number.

12.126 Notice of Abandonment.

If the importer intends to abandon the shipment after receiving notice of refusal of entry, the importer shall present a written notice of intent to abandon to the District Director and the Administrator. Notification under this section is a waiver of any right to export the merchandise. The importer shall remain liable for any expenses incurred in the storage and/or disposal of abandoned merchandise.

12.127 Decision to Store or Dispose.

A shipment detained under section 12.122 shall be considered to be unclaimed or abandoned and shall be turned over to the Administrator for storage or disposition as provided for in section 127.28(i) of this chapter if the importer has not brought the shipment into compliance with TSCA within time limitations or extensions specified according to section 12.124 and:

(a) Has not exported the shipment within time limitations or extensions specified according to section 12.124; or

(b) Has certified intent to abandon the shipment in accordance with section 12.126.

333-194 O - 80 - 3

It is proposed to amend part 127, Customs Regulations (19 CFR part 127), by adding a new subsection (i) to section 127.28, to read as follows:

(i) *Chemical substances, mixtures, and articles containing chemical substances or mixtures.* Chemical substances, mixtures, and articles containing chemical substances or mixtures, as these items are defined in section 3, Toxic Substances Control Act (TSCA) and section 12.120 of this chapter, shall be inspected by a representative of the Environmental Protection Agency to ascertain whether they comply with TSCA and the regulations and orders issued thereunder. If found not to comply with these requirements, they shall be exported or otherwise disposed of immediately in accordance with the provisions of sections 12.125 through 12.127 of this chapter.

WILLIAM T. ARCHEY,
for Commissioner of Customs.

Approved: November 14, 1980.

RICHARD J. DAVIS,
Assistant Secretary of the Treasury.

[Published in the Federal Register, Dec. 1, 1980 (45 F.R. 79730)]

United States Court of International Trade

One Federal Plaza

New York, N.Y. 10007

Chief Judge

Edward D. Re

Judges

Paul P. Rao
Morgan Ford
Scovel Richardson
Fredrick Landis
James L. Watson
Herbert N. Maletz
Bernard Newman
Nils A. Boe

Senior Judge

Samuel M. Rosenstein

Clerk

Joseph E. Lombardi

(Slip Op. 80-2)

SANHO COLLECTIONS, LIMITED, PLAINTIFF, *v.* ROBERT E. CHASEN' COMMISSIONER OF CUSTOMS, ARTHUR GAREL, ACTING CHAIRMAN, COMMITTEE FOR THE IMPLEMENTATION OF TEXTILE AGREEMENTS, AND THE UNITED STATES OF AMERICA, DEFENDANTS

Court No. 80-11-00039

Opinion and Order re Plaintiff's Application for Preliminary Injunction and Temporary Restraining Order

[Action dismissed in part; plaintiff's application for temporary restraining order and preliminary injunction denied.]

(Dated November 14, 1980)

Cleary, Gottlieb, Steen & Hamilton, Esqs. (*James W. Lamberton* and *Jonathan I. Blackman*, Esqs., of counsel) and *Siegel, Mandell & Davidson*, PC (*Steven S. Weiser*, Esq., of counsel) for the plaintiff.

Alice Daniel, Assistant Attorney General, *Joseph I. Liebman*, Attorney in Charge, Field Office for Customs Litigation (*James A. Resti*, trial attorney), for the defendants.

NEWMAN, Judge: The recent enactment (effective Nov. 1, 1980) of the wide-ranging Customs Courts Act of 1980, granting substantially additional jurisdiction to the new U.S. Court of International Trade, inevitably will give rise to numerous areas of litigation. Indeed, this matter of first impression is typical.

This is an action for preliminary and permanent injunctive relief to restrain defendants from implementing a reduction in an import quota by the Committee for the Implementation of Textile Agreements (CITA) respecting certain sweaters from the Republic of Korea. On the merits, plaintiff challenges the legality of CITA's reduction in the sweater import quota.

Presently before this Court is plaintiff's application for an order to show cause why a temporary restraining order (TRO) and preliminary injunction pendente lite should not be issued under rule 65 of the rules of this court to restrain and enjoin defendants from prohibiting the entry into the United States of plaintiff's sweaters, pursuant to the contested quota reduction.

For the reasons indicated hereinafter, plaintiff's application is denied, and this action is dismissed in part.

I.

Accepting the averments of fact in the verified complaint as true, and the affidavits submitted on behalf of plaintiff in their most favorable light, as for the present purposes we must, the basic facts underlying this action may be summarized as follows:

> Under the terms of the Agricultural Act of 1956, 7 U.S.C. 1854, the President is authorized to negotiate agreements with foreign governments limiting the importation of textile products into the United States, and to issue regulations governing the entry of such products in order to carry out any agreements made. By Executive Order 11651 dated March 3, 1972, as amended by Executive Order 11951 dated January 6, 1977, the President's authority under 7 U.S.C. 1854 to implement textile trade agreements entered into pursuant to the statute has been delegated to CITA, which agency is further authorized to issue instructions to the Commissioner of Customs to take such actions respecting the entry of textile products into the United States as are necessary to carry out such agreements.

This action involves the Bilateral Cotton Wool and Man-made Fiber Textile Agreement, T.I.A.S. 9039 (Textile Agreement) between

the United States and the Republic of Korea. This agreement, executed on December 23, 1977, provides inter alia, for quotas or specific limits for various categories of textile products for each year during its term. Among the articles covered by the Textile Agreement are men's and women's sweaters made of cotton or manmade fibers (category 645/646).

Under the terms of the Textile Agreement, the sweaters in category 645/646 are subject to specific limits for each year of the agreement, which are set forth in annex B thereto. Additionally, the agreement provides for flexibility provisions which allow its specific limits to be exceeded in the course of any year in accordance with various criteria (Agreement, sec. 3). Thus, the agreement provides for increases in the specific limit for category 645/646 for any given year through carryovers of unfilled portions of previous years' quotas and carryforwards of portions of succeeding years' quotas (Agreement, sec. 9), and provides for additional percentage increases of 6 percent in any given year (Agreement, sec. 8). The Textile Agreement, however, does not expressly contain provisions for reduction of the specific limit for category 645/646, or any other category, during the course of a particular year.

Under the Textile Agreement, the specific limit for sweaters in category 645/646 for 1980 was set at 2,976,181 dozen, and thereafter increased by an amendment to the agreement, T.I.A.S. 9566 (Aug. 24, 1979), to 3,009,062 dozen, subject to the provisions for further increases that the agreement contains. On December 20, 1979, CITA issued a directive implementing this figure, and stating that the restraint level for the forthcoming year 1980 for sweaters in category 645/646 would be 3,009,062 dozen as the agreement provided. 44 FR 76573 (Dec. 27, 1980).

That directive contained a specific reference to the flexibility provisions of the Textile Agreement, stating:

> "The levels of restraint set forth above are subject to adjustment in the future pursuant to the provisions of the bilateral agreement of December 23, 1977, as amended, between the Governments of the United States and the Republic of Korea which provide in part, that: (1) Within the aggregate and applicable group limits, specific levels of restraint may be exceeded by designated percentages; (2) these same levels may be increased for carryover and carry forward up to 11 percent of the applicable category limit; (3) consultation levels may be increased within the aggregate and applicable group limits upon agreement between the two governments; and (4) administrative arrangements or adjustments may be made to resolve minor problems arising in the implementation of the agreement."

Nothing in the December 20, 1979, directive referred to any possible reduction in the 1980 restraint levels.

Plaintiff made its import arrangements for 1980 in accordance with the December 20, 1979, directive. It was able to do so predicated on Korea's system of export control, under which Korea implements the specific limits enumerated in the Textile Agreement from its own end by allocating production among manufacturers, and only issuing visas for export up to the level set forth in the agreement. Relying upon the December 20, 1979, directive and this allocation mechanism, plaintiff entered into contracts during June and July 1980, to purchase a total of 233,340 sweaters in category 645/646 from Korean exporters, at an aggregate price of over $1 million, for importation into the United States. During July and August 1980, plaintiff proceeded to enter into agreements to resell these sweaters to American customers, for ultimate resale in the United States. By the end of September 1980, certain of these sweaters had been received by plaintiff, imported into the United States, and entered through Customs; but the majority were still in the process of being transported to the United States. All of them had been manufactured by the end of September 1980, or were in the process of manufacture. This was in accordance with the usual custom of the trade whereby garments to be sold for the Christmas season are in an advanced state of manufacture in September, are delivered to the U.S. importer by the end of October, and are redelivered by the importer to its customers by mid-November.

On September 23, 1980, CITA issued a directive in the form of a letter from the Acting Chairman of CITA to the Commissioner of Customs, 45 FR 63897 (Sept. 26, 1980). This directive was issued without any prior notice and without affording any opportunity for comment or hearing to any person. It purports to reduce retroactively the 1980 specific limit for sweaters in category 645/646 from 3,009,062 dozen, as set forth in CITA's December 20, 1979, directive and the Textile Agreement, to only 2,717,311 dozen, and directs the Commissioner of Customs to prohibit the entry of any sweaters in excess of this reduced amount. The CITA directive referred to the Government of Korea's consent to the reduction in the import restraint level.

As directed by CITA's September 23, 1980, promulgation, the Customs Service proceeded to implement the new reduced quota level. On November 7, 1980, officials of the Customs Service announced that as of 8:49 a.m. (e.s.t.) on November 4, 1980, the specific limit for category 645/646, as reduced to 2,717,311 dozen by CITA's September 23, 1980, directive, had been filled; and thereupon Customs excluded from entry into the United States any further sweaters then in the process of importation. At that time, plaintiff had 1,752 dozen sweaters in category 645/646 awaiting entry at J. F. K. International Airport in New York, and a further 7,551 dozen sweaters in this category awaiting shipment in Seoul, Korea. All of these sweaters have been paid for (or are subject to irrevocable letters of credit

permitting payment to be demanded at any time) and had already been sold to various customers in the United States. The Customs Service has indicated to plaintiff it will deny entry to any sweaters that plaintiff attempts to enter during 1980.

II.

In connection with plaintiff's application, which was filed on November 10, 1980, at 4:31 p.m., the eve of a national holiday, a conference was immediately held in Chambers on the same date from approximately 4:35 p.m. to 6:15 p.m., at which time counsel for the respective parties presented oral arguments in support of their positions. In view of plaintiff's emergent situation, the Court advised counsel that it would promptly issue an order and give this action precedence over all other pending matters. Based upon plaintiff's moving papers (defendant expressly declined at that time an opportunity to submit opposing papers), and the oral arguments, the contentions of the parties are as follows:

> Plaintiff contends: First, CITA's action is invalid because that agency failed to comply with the rulemaking provisions of the Administrative Procedure Act (5 U.S.C. 553) or otherwise provide notice and opportunity to comment before reducing the import restraint level. Second, CITA's action in suddenly ordering a sharp reduction in the import level about 3 months prior to ending of the year, after previously setting this level in accordance with the Textile Treaty and effectively representing that it was subject to upward modification only, was arbitrary and capricious. Finally, CITA's promulgated action exceeds its own legal authority, since it is not authorized by anything in the Textile Treaty that CITA is purporting to apply.

Plaintiff maintains that it should be granted extraordinary relief in the form of a TRO and preliminary injunction pendente lite since plaintiff is likely to succeed on the merits (or there are at least serious questions going to the merits), and without such relief plaintiff will suffer irreparable injury. Concerning the question of irreparable injury, plaintiff asserts that if these sweaters are denied entry until the opening of the import level for next year, they will lose most of their value; that such denial would render plaintiff unable to fulfill its contractual commitments; that plaintiff will be exposed to liability for damages from its American customers, as well as sustaining grave and irreparable injury to its good name and business reputation; and that none of these injuries will be compensable by money damages, since all stem directly from official action in lowering the quota for sweaters from Korea.

Defendants' position is that since plaintiff has failed to exhaust its administrative remedies, as required by 28 U.S.C. 2637, judicial review is premature at this juncture, and hence the court presently

lacks jurisdiction. Specifically, defendant insists that if plaintiff's sweaters have been, or are denied, entry under the restraint level, plaintiff must first seek an administrative review by filing a protest pursuant to 19 U.S.C. 1514, and plaintiff can request an accelerated disposition of the protest under 19 U.S.C. 1515(b). Counsel for defendants have expressed no views concerning the merits of the action, but dispute plaintiff's claim of irreparable injury.

For the reasons indicated hereinafter, this action is dismissed in part as premature, without prejudice to renewal, and plaintiff's application for a TRO and preliminary injunction is denied.

III.

Respecting the 1,752 dozen sweaters which were imported from Korea through the J. F. K. International Airport and were denied entry by Customs under the quota reduction, obviously there was a protestable action by Customs prescribed under 19 U.S.C. 1514(a)(4), and thus plaintiff has an administrative remedy. In accordance with 28 U.S.C. 2637, it is appropriate that this Court require the exhaustion of administrative remedies. Therefore, concerning the merchandise excluded from entry at the J. F. K. Airport, this action is presently not ripe for judicial review and must be dismissed in part, without prejudice to renewal after plaintiff has exhausted its administrative remedies.

However, as to the additional 7,551 dozen sweaters awaiting shipment in Seoul, Korea, there is presently no protestable administrative action pursuant to section 1514 and thus no administrative remedy. This Court unquestionably has subject matter jurisdiction under 28 U.S.C. 1581(i) (3) and (4) without administrative review. Consequently, plaintiff is properly in Court at this time regarding the sweaters awaiting shipment in Korea, which Customs has indicated will not be allowed entry during 1980.

We come, then, to a consideration of whether plaintiff has shown sufficient grounds warranting the exercise of the Court's powers to grant the extraordinary relief requested.

As provided by 28 U.S.C. 1585:

> The Court of International Trade shall possess all the powers in law or equity of, or as conferred by statute upon, a district court of the United States.

Moreover, it should be stressed that under 28 U.S.C. 2643 this Court, with certain limitations, is expressly empowered to grant injunctive relief.

The courts have long recognized that, fundamentally, preliminary injunctive relief is an extraordinary remedy, *Asher* v. *Laird*, 475 F. 2d 360, 362 (D.C. Cir. 1973) and should be granted only upon a clear showing that the moving party is entitled to the relief requested.

Flintkote Co. v. *Blumenthal*, 469 F. Supp. 115, 126–27 (N.D.N.Y. 1970), *aff'd.* 569 F. 2d 51 (2d Cir. 1979).

In *Asher* v. *Laird, supra*, 475 F. 2d at 362, the Court of Appeals succinctly observed:

> The granting of such extraordinary relief [a preliminary injunction] is a matter of the trial court's discretion as guided by a standard consisting of the following familiar factors: (1) Has the plaintiff made a strong showing that it is likely to prevail on the merits of the appeal?; (2) Has the plaintiff shown that without such relief it would be irreparably injured?; (3) Would the issuance of the injunction substantially harm other parties interested in the proceedings?; (4) Where lies the public interest?

See also the excellent discussion in *Re, Cases and Materials in Equity and Equitable Remedies* (1975), chapter XIX, section 1.

After full consideration of the factors enumerated above in *Asher* in conjunction with all the facts and circumstances adduced by plaintiff, I am constrained to conclude that plaintiff's application for the extraordinary relief sought should be denied.

Without prejudice to reaching a possibly contrary result when the merits of this action are fully considered, I find that plaintiff did not clearly demonstrate a substantial likelihood of success on the merits for purposes of an inquiry into the propriety of a preliminary injunction. Without such demonstration, plaintiff did not meet its burden and it would be inappropriate to grant a TRO or preliminary injunction which could possibly be interpreted as casting doubts upon the propriety of CITA's reduction in the import quota, so vigorously contested by plaintiff in this action. It must be emphasized that the granting of the TRO and preliminary injunction under the circumstances in this case would give plaintiff the ultimate or much of the relief which it hopes to attain by prevailing on the merits. Moreover, the valid public interest in a policy of quantitative import restrictions on textile products is entitled to great weight.

IV.

On November 13, 1980, at 5 p.m., an affidavit executed by James A. Resti, a trial attorney in the Department of Justice assigned to this case, was received by the Court. At that point in time, this opinion had been prepared and was in the final stages of typing. Nevertheless, the affidavit has been made part of the record and reviewed by the Court, but nothing contained therein alters the result reached in this opinion.

In substance, the affidavit reveals that the Government of Korea has asserted a claim that there exists a statistical discrepancy between the number of sweaters in category 645/646 exported from Korea, and the number of sweaters imported into the United States

numbering 55,448 dozen; that pending a determination of this discrepancy, CITA has decided to increase the specific limit in category 645/646 by 55,448 dozen; that as an interim measure CITA will lift the embargo currently in effect pending resolution of the discrepancy which may exist in the statistics; that notice of this increase will be published (subsequent to the promulgation of this opinion and order) in the Federal Register of Monday, November 17, 1980; and that Customs will lift the current embargo on November 18, 1980.

Defendant argues that the effect of CITA's decision is that, as of the effective date of raising the specific limit and the lifting of the embargo, there will exist no case or controversy due to the fact that the quota in question will be open; that only when the additional quota is filled will the threat of irreparable injury to plaintiff occur; and that it would be inappropriate to grant provisional relief in the form of a TRO or preliminary injunction within 4 days of the lifting of the embargo.

V.

The Court wishes to commend plaintiff's counsel, Messrs. Jonathan I. Blackman and Steven S. Weiser, for the superb job performed in this case, particularly in view of the emergent situation; and further, to commend all counsel for their excellent presentation in the extensive oral arguments, all in the best traditions of our profession.

For the foregoing reasons, it is hereby ordered:

1. This action is dismissed in part for lack of jurisdiction respecting 1,752 of plaintiff's sweaters imported from Korea, the entry of which merchandise into the United States was denied by the Customs Service. Such dismissal is without prejudice to renewal of the action after plaintiff has exhausted its administrative remedies pursuant to 28 U.S.C. 2637.

2. Plaintiff's application for a TRO and preliminary injunction is denied.

Decisions of the United States Court of International Trade

Abstracts

Abstracted Protest Decisions

DEPARTMENT OF THE TREASURY, *November 17, 1980.*

The following abstracts of decisions of the United States Court of International Trade at New York are published for the information and guidance of officers of the customs and others concerned. Although the decisions are not of sufficient general interest to print in full, the summary herein given will be of assistance to customs officials in easily locating cases and tracing important facts.

ROBERT E. CHASEN,
Commissioner of Customs.

DECISION NUMBER	JUDGE & DATE OF DECISION	PLAINTIFF	COURT NO.	ASSESSED	HELD	BASIS	PORT OF ENTRY AND MERCHANDISE
				Par. or Item No. and Rate	Par. or Item No. and Rate		
P80/176	Richardson, J. November 13, 1980	Capitol Wine & Liquor Co.	76-11-02502	Sec. 303, Tariff Act of 1930, countervailing duties	Dutiable without assessment of countervailing duties because no bounty or grant was paid or bestowed upon the manufacture, production, or export of the merchandise	Agreed statement of facts	Chicago Gin exported from Great Britain
P80/177	Watson, J. November 13, 1980	WFS Div. Amer. Rec. Grp., Ltd.	79-2-00319	Item 389.60 or 389.62 25¢ per lb. + 15%	Item 735.20 10%	The Newman Importing Co., Inc. v. U.S. (C.D. 4648)	Chicago Parts of nylon backpacking tents

P80/178	Re, C.J. November 14, 1980	Kombi Ltd.	77-7-01193	Item 705.35 15%	Item 734.97 Free of duty pursuant to GSP by virtue of Ex. Order 11888 of 11-24-75	Stonewall Trading Co. v. U.S. (C.D. 4023)	New York Ski gloves, ski mitts or ski mittens; product of eligible beneficiary country
P80/179	Richardson, J. November 14, 1980	Topcon Instrument Corp.	78-1-00135, etc.	Item 709.05 25%	Item 727.04 8.5%	Agreed statement of facts	New York Topcon adjustable instrument tables; movable articles of utility; chiefly used to equip doctors' offices and hospitals
P80/180	Watson, J. November 14, 1980	WFS Div. Amer. Rec. Grp., Ltd.	79-7-01147	Item 389.62 25¢ per lb. + 15%	Item 735.20 10%	The Newman Importing Co., Inc. v. U.S. (C.D. 4648)	Chicago Nylon backpacking tents
P80/181	Watson, J. November 14, 1980	World Famous Sales Co.	78-7-01340	Item 389.60 or 389.62 25¢ per lb. + 15%	Item 735.20 10%	The Newman Importing Co., Inc., v. U.S. (C.D. 4648)	Chicago Nylon backpacking tents

Decisions of the United States Court of International Trade

Abstracts

Abstracted Reappraisement Decisions

DECISION NUMBER	JUDGE & DATE OF DECISION	PLAINTIFF	COURT NO.	BASIS OF VALUATION	HELD VALUE	BASIS	PORT OF ENTRY AND MERCHANDISE
R80/341	Watson, J. November 13, 1980	Mitsui & Co., Ltd.	R69/4858	United States value	Equal to Mitsui Seiki f.o.b. Japan unit value ($11,162.39) multiplied by the factor of 1.729, less 20% commission, less 4.66% of Mitsui Seiki f.o.b. unit value, less included duty, packed	Judgment on the pleadings	Chicago Jig boring machine
R80/342	Richardson, J. November 14, 1980	Precision Knitting Accessories	80-7-01072	Export value	Invoice unit values	Agreed statement of facts	New York Latch needles
R80/343	Richardson, J. November 14, 1980	Trans-Ocean Import Co., Inc.	R60/22646	Export value	F.o.b. unit invoice prices plus 20% of difference berween f.o.b. unit invoice prices and appraised values	Agreed statement of facts	Charleston Wool tube mats

International Trade Commission Notices

Investigations by the U.S. International Trade Commission

DEPARTMENT OF THE TREASURY,
November 26, 1980.

The appended notices relating to investigations by the U.S. International Trade Commission are published for the information of Customs Officers and others concerned.

R. E. CHASEN,
Commissioner of Customs.

In the Matter of CHLOROFLUOROHYDROCARBON DRYCLEANING PROCESS, MACHINES AND COMPONENTS THEREFOR	Investigation No. 337-TA-84

Notice of More Complicated Designation

AGENCY: U.S. International Trade Commission.

ACTION: Designation of this investigation as more complicated within the meaning of 19 U.S.C. 1337(b)(1) and 19 CFR 210.15.

AUTHORITY: The authority for Commission designation is contained in section 337(b)(1) of the Tariff Act of 1930 (19 U.S.C. 1337(b)(1)) and in rule 210.15 of the Commission's Rules of Practice and Procedure (19 CFR 210.22).

SUPPLEMENTARY INFORMATION:

BACKGROUND

Upon receipt of a complaint filed by Research Development Co., of Minneapolis, Minn., the U.S. International Trade Commission instituted an investigation on April 17, 1980, to determine whether there is a violation of section 337(a) of the Tariff Act of 1930 (19 U.S.C. 1337(a)) in the importation into the United States of chloroflourohydrocarbon drycleaning machines, or in their sale, by reason of the alleged infringement of claims 1, 3, and 4 of U.S. Letters Patent

3,728,074, the effect or tendency of which is to destroy or substantially injure an industry, efficiently and economically operated, in the United States. Notice of the Commission's investigation was published in the Federal Register of June 11, 1980 (45 F.R. 39580).

On October 8, 1980, the complainant filed a motion (motion 84–9) to designate the investigation "more complicated," within the meaning of section 337(b)(1) of the Tariff Act of 1930 (19 U.S.C. 1337(b)(1)) and rule 210.15 of the Commission's Rules of Practice and Procedure. The motion was supported in a response from the Commission investigative attorney, filed October 17, 1980. The motion was opposed in a response from Macchine Suprema, filed October 21, 1980. On October 24, 1980, the presiding officer certified to the Commission the recommendation that Investigation No. 337–TA–84 be designated more complicated.

DISCUSSION

In determining whether an investigation is more complicated, the Commission must find that it "is of an involved nature owing to the subject matter, difficulty in obtaining information, or large number of parties involved." 19 CFR 210.15. In the present case, two parties were recently joined as respondents and joinder of a third (E. I. du Pont de Nemours & Co., Inc.) is proposed. Du Pont has admitted that it has caused to be imported machinery which allegedly infringes the subject patent. Since these allegations must be investigated and further discovery must take place, there is clearly a present difficulty in obtaining information.

In addition, the recent joinder of the two respondents and the proposed joinder of du Pont increases the number of parties to the investigation. Since the record indicates that the interests of the various parties are not coincident, the respondents cannot be expected to consolidate their actions. Under these circumstances, the Commission believes that there is now a large number of parties in this investigation.

For these reasons, the Commission concludes that this investigation must be designated more complicated. The practical effect of this determination is that the deadline for making a final determination in this investigation will be extended from June 11, 1981, to December 11, 1981.

Copies of the Commission's action and order and all other nonconfidential documents filed in connection with this investigation are available for inspection during official business hours (8:45 a.m. to 5:15 p.m.) in the Office of the Secretary, U.S. International Trade Commission, 701 E Street NW., Washington, D.C. 20436; telephone 202–523–0161.

FOR FURTHER INFORMATION CONTACT: Jack Simmons, Esq., Office of the General Counsel, U.S. International Trade Commission; telephone 202-523-0493.

By order of the Commission.

Issued: November 17, 1980.

KENNETH R. MASON,
Secretary.

In the Matter of CHLOROFLUOROHYDROCARBON DRYCLEANING PROCESS, MACHINES AND COMPONENTS THEREFOR	Investigation No. 337-TA-84

Notice of Addition of a Party Respondent

AGENCY: U.S. International Trade Commission.

ACTION: Addition of party respondent: E.I. du Pont de Nemours & Co., Inc., 1007 Market Street, Wilmington, Del. 19898.

AUTHORITY: The authority for Commission disposition of the subject motion is contained in section 337 of the Tariff Act of 1930 (19 U.S.C. 1337) and in 19 CFR 210.22.

SUPPLEMENTARY INFORMATION: Upon receipt of a complaint filed by Research Development Co., of Minneapolis, Minn., the U.S. International Trade Commission instituted an investigation on April 17, 1980, to determine whether there is a violation of section 337(a) of the Tariff Act of 1930 (19 U.S.C. 1337(a)) in the importation into the United States of chlorofluorohydrocarbon drycleaning machines, or in their sale, by reason of the alleged infringement of claims 1, 3, and 4 of U.S. Letters Patent 3,728,074, the effect or tendency of which is to destroy or substantially injure an industry, efficiently and economically operated in the United States. Notice of the Commission's investigation was published in the Federal Register of June 11, 1980 (45 F.R. 39580).

On September 26, 1980, E.I. du Pont de Nemours & Co., Inc. (hereinafter du Pont), filed a motion to intervene (motion 84-8), pursuant to rule 210.6 of the Commission's Rules of Practice and Procedure, as a nonparty intervenor.

On October 14, 1980, the Commission investigative attorney's response to motion 84-8 was redesignated motion 84-12 to amend the complaint and notice of investigation by addition of E. I. du Pont de Nemours & Co., Inc. as a party respondent. On October 27, 1980, the motion was certified to the Commission by the presiding officer, who recommended that the motion be granted. Copies of the Commission's action and order and all other nonconfidential documents

filed in connection with this investigation are available for inspection during official business hours (8:45 a.m. to 5:15 p.m.) in the Office of the Secretary, U.S. International Trade Commission, 701 E Street NW., Washington, D.C. 20436; telephone 202-523-0161.

FOR FURTHER INFORMATION CONTACT: Jack Simmons, Esq., Office of the General Counsel, U.S. International Trade Commission: telephone 202-523-0493.

By order of the Commission.

Issued: November 17, 1980.

KENNETH R. MASON,
Secretary.

In the Matter of CERTAIN AIRLESS PAINT SPRAY PUMPS AND COMPONENTS THEREOF	Investigation No. 337-TA-90

Notice of Investigation

Notice is hereby given that a complaint was filed with the U.S. International Trade Commission on October 8, 1980, and amended October 22, 1980, under section 337 of the Tariff Act of 1930 (19 U.S.C. 1337), on behalf of Wagner Spray Tech Corp., 1770 Fernbrook Lane, Minneapolis, Minn. 55440. The amended complaint (hereinafter referred to as the complaint) alleges unfair methods of competition and unfair acts in the importation into the United States of certain airless paint spray pumps and components thereof, or in their sale, because such pumps are allegedly covered by claims 1, 22, and 23 of U.S. Letters Patent 3,254,845, claims 12 and 19 of U.S. Letters Patent 3,367,270, and claims 40, 41, and 42 of U.S. Letters Patent Re 29,055. The complaint further alleges that the effect or tendency of the unfair methods of competition and unfair acts is to destroy or substantially injure an industry, efficiently and economically operated, in the United States.

The complainant requests the Commission to institute an investigation; conduct an expedited hearing for the purpose of determining whether there is reason to believe that there is a violation of section 337; upon the conclusion of said expedited hearing, issue both a temporary exclusion order prohibiting importation of the articles in question into the United States, except under bond, during the investigation and a temporary cease and desist order with respect to domestic sales and promotion of stockpiled imports; and, after a

full investigation, issue an order permanently forbidding entry of the articles in question into the United States.

Having considered the complaint, the Commission, on November 6, 1980, ordered that—

(1) Pursuant to subsection (b) of section 337 of the Tariff Act of 1930 (19 U.S.C. 1337), an investigation be instituted to determine whether there is reason to believe that there is a violation and whether there is a violation of subsection (a) of section 337 in the unauthorized importation of certain airless paint spray pumps, components thereof, and airless paint spray equipment containing said pumps into the United States, or in their sale, by reason of the alleged coverage of such pumps by claims 1, 22, and 23 of U.S. Letters Patent 3,254,845 claims 12 and 19 of U.S. Letters Patent 3,367,270, and claims 40, 41, and 42 of U.S. Letters Patent Re 29,055, the effect or tendency of which is to destroy or substantially injure an industry, efficiently and economically operated, in the United States;

(2) For the purpose of this investigation so instituted, the following are hereby named as parties upon which this notice of investigation shall be served:

(a) The complainant is—

Wagner Spray Tech Corp.
1770 Fernbrook Lane
Minneapolis, Minn. 55440

(b) The respondents are the following companies alleged to be engaged in the unauthorized importation of such articles into the United States, or in their sale, and are parties upon which the complaint is to be served:

Larius DiCastagna and C., S.N.C., Ltd.
Via Perviotti 11
Lecco, Italy

Imperial Paint Applicators, Ltd.
4 Station Road
Irvington, N.Y. 10533

Karmichael Industries, Ltd.
4 Station Road
Irvington, N.Y. 10533

Simco Bush Tool Corp.
4 Station Road
Irvington, N.Y. 10533

c. Talbot S. Lindstrom, Chief, Unfair Import Investigations Division, U.S. International Trade Commission, 701 E Street NW., Washington, D.C. 20436, shall name the Commission investigative attorney, a party to this investigation;

3. For the investigation so instituted, Donald K. Duvall, Chief Administrative Law Judge, U.S. International Trade Commission, 701 E Street NW., Washington, D.C. 20436, shall designate the presiding officer; and

4. With respect to the complainant's request for expedition of the temporary relief hearing, action on such request is deferred to the presiding officer.

The phrase "and airless paint spray equipment containing said pumps" has been added to paragraph (1) above on the basis of informal investigatory activities by the Commission which revealed that the pumps of the type alleged to infringe the aforesaid claims of said respective letters patents can be imported as airless paint spray pumps, components thereof, and as a part of airless paint spray equipment.

Responses must be submitted by the named respondents in accordance with section 210.21 of the Commission's Rules of Practice and Procedure (19 CFR 210.21). Pursuant to sections 201.16(d) and 210.21(a) of the rules, such responses will be considered by the Commission if received not later than 20 days after the date of service of the complaint. Extensions of time for submitting a response will not be granted unless good and sufficient cause therefor is shown.

Failure of a respondent to file a timely response to each allegation in the amended complaint and in this notice may be deemed to constitute a waiver of the right to appear and contest the allegations of the complaint and this notice, and to authorize the presiding officer and the Commission, without further notice to the respondent, to find the facts to be as alleged in the complaint and this notice and to enter both a recommended determination and a final determination containing such findings.

The complaint is available for inspection by interested persons at the Office of the Secretary, U.S. International Trade Commission, 701 E Street NW., Washington, D.C. 20436.

By order of the Commission.

Issued: November 17, 1980.

KENNETH R. MASON,
Secretary.

731-TA-36 (Preliminary)

Snow Grooming Vehicles, Parts Thereof and Accessories Therefor From the Federal Republic of Germany

Notice of Institution of Preliminary Antidumping Investigation and Scheduling of Conference

AGENCY: U.S. International Trade Commission.

ACTION: Institution of preliminary antidumping investigation to determine whether there is a reasonable indication that an industry in the United States is materially injured, or is threatened with material injury, or the establishment of an industry is materially retarded, by reason of imports from the Federal Republic of Germany of certain snow grooming vehicles, parts thereof and accessories therefor allegedly sold or likely to be sold at less than fair value. For the purposes of this investigation, the term "snow grooming vehicles, parts thereof and accessories therefor" means track-laying vehicles, having a tilting cab, specially designed for grooming snow, provided for in items 692.16 or 692.35 of the Tariff Schedules of the United States (TSUS) and parts thereof and accessories therefor chiefly used on such vehicles, wherever provided for in the TSUS.

EFFECTIVE DATE: November 6, 1980.

FOR FURTHER INFORMATION CONTACT: John MacHatton, Supervisory Investigator; 202-523-0439.

SUPPLEMENTARY INFORMATION:

BACKGROUND

This investigation is being instituted following receipt of a petition on November 6, 1980, filed by the Logan Division of DeLorean Manufacturing Co. The petition requested the imposition of additional duties in an amount equal to the amount by which the foreign market value exceeds the U.S. price of snow grooming vehicles imported from the Federal Republic of Germany.

AUTHORITY

Section 733(a) of the Tariff Act of 1930 (19 U.S.C. 1673b(a)) requires the Commission to make a determination of whether there is a reasonable indication that an industry in the United States is materia ly injured, or is threatened with material injury, or the establishment of an industry in the United States is materially retarded, by reason of imports alleged to be, or likely to be, sold in the United States at less than fair value. Such a determination must be

made within 45 days after the date on which a petition is filed under section 732(b) or on which notice is received from the Department of Commerce of an investigation commenced under section 732(a). Accordingly, the Commission, on November 17, 1980, instituted preliminary antidumping investigation No. 731-TA-36. This investigation will be subject to the provisions of part 207 of the Commission's Rules of Practice and Procedure (19 CFR 207, 44 F.R. 76457) and particularly, subpart B thereof.

WRITTEN SUBMISSIONS

Any person may submit a written statement of information pertinent to the subject matter of this investigation to the Commission on or before December 5, 1980. A signed original and 19 copies of such statements must be submitted.

Any business information which a submitter desires the Commission to treat as confidential shall be submitted separately and each sheet must be clearly marked at the top "Confidential Business Data". Confidential submissions must conform with the requirements of section 201.6 of the Commission's Rules of Practice and Procedure (19 CFR 201.6). All written submissions, except for confidential business data, will be available for public inspection.

CONFERENCE

The Director of Operations of the Commission has scheduled a conference in connection with this investigation for 10 a.m., e.s.t., on December 4, 1980, at the U.S. International Trade Commission Building, 701 E Street NW., Washington, D.C. Parties wishing to participate in the conference should contact the supervisory investigator for the investigation, Mr. John MacHatton (202-523-0439). It is anticipated that parties in support of the petition for antidumping duties and parties opposed to such petition will each be collectively allocated 1 hour within which to make an oral presentation at the conference. Further details concerning the conduct of the conference will be provided by the supervisory investigator.

INSPECTION OF PETITION

The petition filed in this case is available for public inspection at the Office of the Secretary, U.S. International Trade Commission.

By order of the Commission.

Issued: November 17, 1980.

KENNETH R. MASON,
Secretary.

(332–119)

BACKGROUND STUDY OF THE ECONOMIES AND INTERNATIONAL TRADE PATTERNS OF THE COUNTRIES OF NORTH AMERICA (INCLUDING CENTRAL AMERICA AND THE CARIBBEAN)

AGENCY: U.S. International Trade Commission.

ACTION: Notice is hereby given that the U.S. International Trade Commission, following receipt on October 10, 1980, of a request from the U.S. Trade Representative at the direction of the President, has instituted an investigation under section 332(g) of the Tariff Act of 1930 (19 U.S.C. 1332(g)) with respect to the economies and international trade patterns of the countries of North America (including Central America and the Caribbean).

EFFECTIVE DATE: November 13, 1980.

FOR FURTHER INFORMATION CONTACT: Mr. Martin F. Smith, Trade Reports Division, Office of Economics, U.S. International Trade Commission, 701 E Street NW., Washington, D.C. 20436; 202–724–0092.

SUPPLEMENTARY INFORMATION: Section 1104 of the Trade Agreements Act of 1979 (Public Law 96–39) directs the President to study the desirability of entering into trade agreements with countries in the northern portion of the Western Hemisphere to promote the economic growth of the United States and such countries and the mutual expansion of market opportunities and to report to the Committee on Ways and Means of the House of Representatives and the Committee on Finance of the Senate his findings and conclusions. The President's study will include, inter alia, chapters on the economic structures and international trade patterns of North American countries. The Commission investigation will provide materials for these chapters.

WRITTEN SUBMISSIONS: The Commission has no public hearings scheduled for this investigation. Written submissions from interested parties are therefore invited concerning any phase of the Commission's study on the economic structures and international trade patterns of North American countries. Commercial or financial information which a party desires the Commission to treat as confidential must be submitted on separate sheets of paper, each clearly marked Confidential Business Information at the top. All submissions requesting confidential treatment must conform with the requirements of section 201.6 of the Commission's Rules of Practice and Procedure (19 CFR 201.6). All written submissions, except for confidential business information, will be made available for inspection by interested persons. To be insured of consideration by the Com-

mission in this study, written statements should be submitted at the earliest practicable date, but no later than December 10, 1980. All submissions should be addressed to the Secretary at the Commission's office in Washington, D.C.

COMPLETION DATE: The Commission plans to complete its study and submit its report to the U.S. Trade Representative not later than January 31, 1981.

By order of the Commission.

Issued: November 19, 1980.

KENNETH R. MASON,
Secretary.

Notice of Change in Scope of Investigation No. 731-TA-7 (Final) Certain Electric Motors From Japan

AGENCY: U.S. International Trade Commission.

ACTION: Change in scope of final antidumping investigation.

EFFECTIVE DATE: November 19, 1980.

FOR FURTHER INFORMATION CONTACT: Bruce Cates, Senior Investigator, Office of Investigations; telephone 202-523-0368.

SUPPLEMENTAL INFORMATION: On June 20, 1980, the Department of Commerce published with respect to AC, polyphase electric motors from Japan a notice of preliminary determination of sales at less than fair value. This notice advised the public that, with the exception of submersible well-pump motors which had been excluded from the investigation, there was reason to believe that certain industrial electric motors, of greater than 5 but not greater than 500 horsepower, from Japan are being, or are likely to be, sold in the United States at less than fair value.

On October 29, 1980, the Department of Commerce determined, pursuant to section 735(a) of the Tariff Act of 1930 (19 U.S.C. 1673d), that AC, polyphase electric motors of not less than 150 horsepower and not greater than 500 horsepower from Japan are being sold in the United States at less than fair value.

As to AC, polyphase electric motors of greater than 5 horsepower and less than 150 horsepower, on October 29, 1980, pursuant to section 734 of the Tariff Act of 1930 (19 U.S.C. 1673c), the Department of Commerce accepted an agreement from Toshiba and TIC (the principal importer) to limit the exportation of such motors to the United States. Under the agreement, Toshiba and TIC agree to cease, within 6 months, exports of AC, polyphase electric motors of greater than 5 hp and less than 150 hp, except for oil-well-pump and

explosion-proof motors, and to revise prices to completely eliminate any sales at less than fair value of imported oil-well-pump and explosion-proof motors greater than 5 and less than 150 horsepower.

As a result of the agreement, the Department of Commerce, pursuant to section 734(f)(1) of the Tariff Act of 1930 (19 U.S.C. 1673c), suspended its investigation with respect to AC, polyphase electric motors of greater than 5 horsepower and less than 150 horsepower. Under section 734(f)(2)(A) of the act, the liquidation of entries of small motors, effective June 20, 1980 (45 F.R. 41687), is terminated. Any cash deposits, bonds, or other security deposited on entries of small motors pursuant to suspension of liquidation will be refunded. As to the large motors, those of not less than 150 horsepower and not greater than 500 horsepower, the suspension of liquidation shall continue until further notice.

Pursuant to the requirements of section 734(f)(1)(B) of the Tariff Act of 1930, (19 U.S.C. 1673c) the Commission is also suspending that portion of its investigation on certain electric motors from Japan inv. No. 731-TA-7 (Final), that pertains to AC, polyphase electric motors of greater than 5 horsepower but less than 150 horsepower.

By order of the Commission.

Issued: November 20, 1980.

KENNETH R. MASON,
Secretary.

In the Matter of CERTAIN ROTATABLE PHOTOGRAPH AND CARD DISPLAY UNITS, AND COMPONENTS THEREFOR	Investigation No. 337-TA-74

Notice of Commission Determination and Order

Notice is hereby given that, upon consideration of the presiding officer's recommended determination and the record in this proceeding (investigation No. 337-TA-74, Certain Rotatable Photograph and Card Display Units, and Components Therefor), the Commission has unanimously determined that there is a violation of section 337 of the Tariff Act of 1930 (19 U.S.C. 1337) in the importation or sale of certain rotatable photograph and card display units which infringe (1) the claim of U.S. Letters Patent 3,218,743, (2) the claim of U.S. Letters Patent 3,791,059, (3) U.S. Trademark Registration No. 838,394, and (4) the common-law trademark "Roto-Photo" and has ordered that infringing devices be excluded from entry into the United States during the lives of said patents or registered trademark or during the use of the common law trademark, except under license.

The Commission also ordered that these devices are entitled to entry into the United States under bond in the amount of 200 percent ad valorem during the period that this action is pending before the President.

Notice is also given that the Commission has granted motions Nos. 74–8 and 74–9 to terminate this investigation as to respondents American Consumer, Inc., and Dan-Dee Imports, Inc., on the basis of settlement agreements between complainants and those respondents.

This Commission order is effective on the date of its publication in the Federal Register. Any party wishing to petition for reconsideration must do so within fourteen (14) days of service of the Commission determination. Such petitions must be in accord with section 210.56 of the Commission's rules (19 CFR 210.56). Any person adversely affected by a final Commission determination may appeal such determination to the U.S. Court of Customs and Patent Appeals.

Copies of the Commission's Determination, Order, and Memorandum Opinion (USITC Publication 1109, Nov. 1980) are available to the public during official working hours at the Office of the Secretary, U.S. International Trade Commission, 701 E Street NW., Washington, D.C. 20436; telephone 202–523–0161. Notice of the institution of the Commission's investigation was published in the Federal Register of November 21, 1979 (44 F.R. 66997).

By order of the Commission.

Issued: November 21, 1980.

KENNETH R. MASON,
Secretary.

Index

U.S. Customs Service

	T.D.No.
Treasury decisions:	
Instruments of international traffic bonds	80-282
Foreign currencies:	
Daily certified rates; November 10-14, 1980	80-283
Rates which varied from quarterly rate; November 10-14, 1980	80-284

U.S. Court of International Trade

Administrative:
- Remedies, failure to exhaust, Slip Op. 80-2
- Review; protest, filing of, Slip Op. 80-2

Committee for implementation of Textile Agreements (CITA), Slip Op. 80-2
Construction:
- Agricultural Act of 1956, Slip Op. 80-2
- Customs Courts Act of 1980, Slip Op. 80-2
- Executive Orders 11651, 11951, Slip Op. 80-2
- Rules of United States Court of International Trade, rule 65, Slip Op. 80-2
- U.S. Code:
  - Title 5, sec. 553, Slip Op. 80-2
  - Title 7, sec. 1854, Slip Op. 80-2
  - Title 19:
    - Sec. 1514, Slip Op. 80-2
    - Sec. 1514(a)(4), Slip Op. 80-2
    - Sec. 1515(b), Slip Op. 80-2
  - Title 28:
    - Sec. 1581(i)(3), Slip Op. 80-2
    - Sec. 1581(i)(4), Slip Op. 80-2
    - Sec. 1585, Slip Op. 80-2
    - Sec. 2637, Slip Op. 80-2
    - Sec. 2643, Slip Op. 80-2

Court of International Trade, powers of, Slip Op. 80-2
Extraordinary remedy; preliminary injunctive relief, Slip Op. 80-2
Flexibility provisions; Textile Agreement, Slip Op. 80-2
Irreparable injury, claim of, Slip Op. 80-2
Korea, Republic of; Textile Agreement (T.I.A.S. 9039), Slip Op. 80-2
Opinion and order; preliminary injunction and temporary restraining order, application for, Slip Op. 80-2
Preliminary:
- Injunction and temporary restraining order, application:
  - Denied, Slip Op. 80-2
  - For; opinion and order, Slip Op. 80-2
- Injunctive relief; extraordinary remedy, Slip Op. 80-2

Protest, filing of; administrative review, Slip Op. 80-2

Republic of Korea; Textile Agreement (T.I.A.S. 9039), Slip Op. 80–2
Sweaters, specific limit for, Slip Op. 80–2
Temporary restraining order, Slip Op. 80–2
Textile Agreement:
    Flexibility provisions, Slip Op. 80–2
    (T.I.A.S. 9039):
        Korea, Republic of, Slip Op. 80–2
        Republic of Korea, Slip Op. 80–2
Treatises and related publications; Re, *Cases and Materials in Equity and Equitable Remedies* (1975), Ch. XIX, Sec. 1, Slip Op. 80–2

U.S. GOVERNMENT PRINTING OFFICE : 1980 - O - 331-194

JAN 2 1981 333-195 Item 950-D T 1.1/3:14/51
Copies 378

Customs Bulletin

Regulations, Rulings, Decisions, and Notices concerning Customs and related matters

and Decisions

of the United States Court of Customs and Patent Appeals and the United States Customs Court

9247

Vol. 14 DECEMBER 17, 1980 No. 51

This issue contains

T.D. 80–285 through 80–289
Erratum
Slip Op. 80–3 through 80–6
Protest Abstracts P80/182
Recent Unpublished Customs Service Decision
International Trade Commission Notices

DEPARTMENT OF THE TREASURY
U.S. Customs Service

NOTICE

The abstracts, rulings, and notices which are issued weekly by the U.S. Customs Service are subject to correction for typographical or other printing errors. Users may notify the U.S. Customs Service, Logistics Management Division, Washington, D.C. 20229, of any such errors in order that corrections may be made before the bound volumes are published.

For sale by the Superintendent of Documents, U.S. Government Printing Office, Washington, D.C. 20402. Price: $2.25 (single copy domestic); $2.85 (single copy foreign). Subscription price: $85.00 a year domestic; $106.25 a year foreign.

U.S. Customs Service

Treasury Decisions

(T.D. 80-285)

Administrative Rulings

Amendments to the Customs Regulations pertaining to the issuance of administrative rulings concerning the tariff classification of imported merchandise

AGENCY: U.S. Customs Service, Department of the Treasury.

ACTION: Final rule.

SUMMARY: This notice amends the Customs Regulations to authorize the Regional Commissioner of Customs, New York, to issue selected tariff classification rulings. The rulings will be limited to requests for the tariff classification of imported merchandise before the transaction is considered by Customs by reason of arrival or entry of the merchandise. A right of appeal to Customs Headquarters is authorized and the rulings issued by the Regional Commissioner will be monitored closely by the Director, Classification and Value Division, Customs Headquarters, for consistency with law, regulation, and precedent cases.

EFFECTIVE DATE: 30 days from the date of publication in the Federal Register.

FOR FURTHER INFORMATION CONTACT: Paul G. Giguere, Deputy Director, Classification and Value Division, Office of Regulations and Rulings, U.S. Customs Service, 1301 Constitution Avenue NW., Washington, D.C. 20229; 566-5868.

SUPPLEMENTARY INFORMATION:

BACKGROUND

To be certain of the duty treatment merchandise will receive when imported into the United States, importers usually request binding rulings from Customs before the import transaction relating to the merchandise takes place. Currently, these rulings are issued by the Office of Regulations and Rulings (ORR) at Customs Headquarters. While some of the requests require immediate replies in order to be

meaningful, others do not require such quick responses. In the absence of advice from the party requesting the ruling, it usually is not possible for ORR to make a determination with respect to the urgency of any particular ruling request. In addition, some of these requests are routine and merely require the application of previously established precedent. On the other hand, a small percentage are more complex and may present issues not previously considered by Customs or may seek reconsideration of previously decided issues.

Because of increases in ruling requests and decreases in staffing, it has become apparent in recent months that some method must be found to modify the ruling process to provide for the expeditious issuance of rulings. A variety of management improvements have been made in ORR, but despite all these changes, it still takes an average of 100 to 110 days to process a response to an importer. A processing time of 100 to 110 days to issue a response in routine cases is not acceptable if Customs intends to provide a meaningful service to the international trade community.

A detailed examination of the ruling process was undertaken for the purpose of improving the system. Pursuant to the examination, it was concluded that present procedures should be modified to allow for a more active role by the National Import Specialists (NIS), under the authority of the Regional Commissioner of Customs, New York (Region II).

The NIS are a relatively small, skilled group of Customs professionals. They are tariff classification technicians and, unlike import specialists located in other Customs regions, are responsible for very narrow areas of the Tariff Schedules of the United States (19 U.S.C. 1202), known as product lines, and are conversant with the judicial and administrative precedent relating to these product lines.

On July 25, 1980, a notice of proposed rulemaking was published in the Federal Register (45 F.R. 49591), proposing to amend part 177, Customs Regulations (19 CFR part 177), to authorize the Regional Commissioner, New York, to issue selected tariff classification rulings. Interested persons were invited to submit comments regarding the proposal on or before August 27, 1980. In response, 23 comments were received from corporations, law firms, customhouse brokers, trade associations, and individuals. Following an analysis of the comments, set forth elsewhere in this document, and subject to the modifications specified therein, Customs has determined to adopt the proposed changes.

As stated in the notice of proposed rulemaking, inasmuch as the NIS are centrally located and are organizationally under the same person, it is anticipated that uniformity of decisions and the quality of rulings will be maintained after this change is made.

The NIS will issue ruling letters regarding prospective Customs transactions only. They will not prepare final decisions on internal advice requests, further review of protest requests, requests for change of practice, and petitions under section 516, Tariff Act of 1930, as amended (19 U.S.C. 1516). Also, they will not prepare final rulings in difference cases.

Requests for tariff classification rulings will be forwarded to the regional Commissioner, New York. Subject to guidelines provided by the Director, Classification and Value Division, Customs Headquarters, the Regional Commissioner will determine whether the request ruling should be issued from the region or whether the matter should be referred to Headquarters. Those members of the public who wish, may make requests directly to Customs Headquarters. However, the Director, Classification and Value Division, Customs Headquarters, may determine to forward requests considered to be routine to the Regional Commissioner for reply.

Customs Headquarters will retain authority to issue rulings in all matters brought to its attention and to review independently all ruling letters issued by the Regional Commissioner. If the importer or other person to whom a ruling letter is issued disagrees with the tariff classification he may petition the Director, Classification and Value Division, Customs Headquarters, for review of the ruling.

If an actual importation of merchandise occurs after receipt of a request for a ruling but before the issuance of the ruling, the Regional Commissioner will handle the matter in the same way it is currently handled by Headquarters (i.e., the party seeking the ruling must advise Customs of the fact an actual importation has occurred; assuming no material change in the facts, the request will continue to be treated by Customs as a prospective ruling request).

The rulings signed by the Regional Commissioner will be binding on Customs. They will not be withdrawn retroactively to the detriment of the party on whose behalf the ruling was requested. Further, if published, those rulings will create established and uniform practices.

DISCUSSION OF COMMENTS

A majority of the commenters responding to the notice of proposed rulemaking endorse Customs proposal to authorize the Regional Commissioner, New York, to issue selected tariff classification rulings. They are of the opinion that implementation of the proposal is an intelligent use of Customs resources and will: benefit all parties; provide more rapid processing of ruling requests in a manner which promotes the uniformity and quality of decisions; enhance the service which Customs offers the importing community; and, enhance the responsibility of the NIS.

Other commenters believe, however, that there is no basis to support or validate the proposal and that it is generally ill-advised.

Two commenters do not believe that the NIS possess the legal skills and background to issue administrative rulings which will bind Customs. Another questions whether the NIS have the legal competence to make determinations involving uniform and established practices.

As previously noted, the NIS are conversant with the judicial and administrative precedent relating to the product lines for which they are responsible. The ruling requests handled by the NIS will be routine and will not involve any other complicating factors. The NIS will not determine the existence or nonexistence of uniform and established practices. For these reasons, Customs is of the opinion that the NIS possess the legal skills and background commensurate with the tasks which they will be assigned. In addition, to insure consistency with law, regulation, and precedent cases, rulings issued by the Regional Commissioner will be closely monitored by the Director, Classification and Value Division, Customs Headquarters.

Although rulings issued by the Regional Commissioner will create established and uniform practices of published, all of these rulings will be reviewed by Headquarters before publication.

One commenter expresses concern that the proposal does not prescribe standards for determining when a request for tariff classification is complex or sensitive. Another states that it appears that by using the terms complex and sensitive Customs is imposing criteria or policy considerations to be applied in issuing administrative rulings. One commenter notes that the burden of determining which issues are complex or sensitive is on the requester and asks if there will be a procedure for complex requests sent to New York to be forewarded to Headquarters and for less complex requests to be sent from Headquarters to New York.

Apparently, the use of the terms complex and sensitive in the notice of proposed rulemaking caused some confusion among the commenters. The terms were used to indicate only that the administrative rulings issued by the Regional Commissioner would be routine and would not involve complicating factors. Customs did not intend to establish criteria or policy considerations to be applied to the administrative ruling process. However, to avoid further confusion, the terms have been deleted from the final amendments.

The Director, Classification and Value Division, Customs Headquarters, will develop guidelines to be followed in transferring requests between Headquarters and the New York Region.

One commenter asks which ruling would take precedence if there is a conflict between rulings issued by Headquarters and the Regional

Commissioner. Another asks whether the NIS will continue to advise Headquarters in internal advice and protest review cases after the proposed amendments are implemented.

In the event of a conflict between rulings issued by Headquarters and the Regional Commissioner, the Headquarters ruling would govern. Because the NIS possess expert technical knowledge, they will continue to advise Headquarters in internal advice, protest review, and other such cases.

Two commenters note that, although they are essentially requests for tariff classification rulings, many ruling requests involve the application of special provisions and should be forwarded to and answered by Headquarters. One commenter suggests that rulings concerning the conditional free entry of merchandise from insular possessions, the generalized system of preferences (GSP), and original automotive equipment from Canada should be issued only by Customs Headquarters.

Customs agrees that these types of requests present issues which are more appropriate for Headquarters review. Accordingly, the Director, Classification and Value Division, Customs Headquarters, will develop and issue guidelines instructing the Regional Commissioner which of these requests are to be forwarded to Headquarters for reply.

Three commenters suggest that application of the prohibition in section 177.1(b), Customs Regulations, bring Customs personnel from ordinarily discussing substantive Customs questions before receiving a written request for a ruling, is too restrictive to apply to the NIS. Importers now may call the NIS for a general indication of the proper classification of merchandise or for an idea of the way in which the NIS would approach the classification of the article. They do not expect Customs to be bound by this oral advice, however, the commenters note that such discussions frequently reveal that a formal ruling request is unnecessary because the classification in issue is well settled. The commenters are of the opinion that the prohibition would discourage an expeditious method of handling requests for information, that the number of requests for formal rulings would increase, and that the goal of expediting the issuance of administrative rulings would be inhibited.

Customs agrees that informal discussion is essential to the expeditious handling of requests for administrative rulings, that impediments to the exchange of information should be eliminated on all levels, and that the prohibition on discussion is unnecessary. So that both the NIS and Headquarters personnel may be free to discuss the issues involved in a specific situation, section 177.1(b) has been modified to delete the prohibition restricting Customs personnel from discussing

substantive Customs questions before receiving a written request for a ruling. Of course, a binding ruling will be issued only after Customs has received a written request.

One commenter asks whether the failure to request a meeting to discuss the issues in a particular case at the time a ruling request is filed would bar such a request at a later late.

A request for a meeting should be made at the time a ruling request is filed. However, when it is requested after filing, a conference may be scheduled if the Customs employee considering the ruling request determines that a conference would be helpful in deciding the issues involved.

Two commenters suggest that American manufacturers, businesses, and trade asssociations with interests related to particular imports should be included as parties entitled to file ruling requests.

Section 177.1(a)(1), now, and as amended by this document, provides that upon written request with respect to a specifically described Customs transaction, Customs will issue administrative rulings setting forth a definitive interpretation of applicable law or other appropriate information to importers or other interested parties. Customs believes that American manufacturers, businesses, and trade associations with interests related to particular imports fall within the scope of the phrase "other interested parties." It should be noted, however, that although request for administrative rulings may be issued to American manufacturers by either Customs Headquarters or the Regional Commissioner, all administrative proceedings under section 516, Tariff Act of 1930, as amended (19 U.S.C. 1516), must be handled at Customs Headquarters.

Two commenters are of the opinion that there should be some time limit within which the Regional Commissioner must respond to request for administrative rulings. One commenter suggests that 30 days from the receipt of the request would be appropriate.

Customs agrees that it is desirable to establish a time limit for the issuance of ruling letters by the Regional Commissioner. However, it is not possible at this time to determine whether 30 days would be appropriate. When practicable, the Director, Classification and Value Division, Customs Headquarters, will issue guidelines directing the Regional Commissioner to process all requests within a specific time limit.

One commenter believes that the 30 days provided to appeal to Headquarters from a ruling letter issued by the Regional Commissioner is insufficient to analyze the initial ruling and develop information in support of a petition for review. Two other commenters suggest that rulings issued by the Regional Commissioner and appealed to Headquarters should not be put into effect, published, or dissemi-

nated to the public or to Customs field offices until the Headquarters review is complete. One commenter is of the opinion that appeals will follow all except the most perfunctory or obvious cases and that if so, the proposal would effect no change.

Customs agrees that the 30-day appeal period does not provide adequate time to analyze a ruling and to develop information in support of a petition for review. Proposed section 177.2(b)(2)(C) has been modified to delete the 30-day limitation. Customs does not agree that rulings issued by the Regional Commissioner and appealed to Headquarters should not be implemented until Headquarters review is completed. If Headquarters determines that the rate of duty applied by the NIS should be lowered, the lower rate will be applied to all pending unliquidated entries covering the same merchandise. In cases where Headquarters determines that the rate of duty applied by the NIS should be increased, the higher rate will apply only to entries or withdrawals from warehouse for consumption made after the date of the ruling.

As noted, the NIS possess a thorough understanding of specific trade and product lines. They are conversant with the judicial and administrative precedent relating to these product lines. In addition, they will be dealing with routine issues solely within their areas of expertise. For these reasons, Customs believes that the NIS are capable of answering the majority of requests which they will receive to the satisfaction of all requesters. We do not believe that Headquarters will be inundated with requests for appeals from rulings issued by the Regional Commissioner as a result of this new procedure.

One commenter states that a ruling issued by the Regional Commissioner should not bind Customs to a uniform and established practice without first being reviewed by Headquarters. Another believes that all ruling letters issued by the Regional Commissioner should be reviewed (by Headquarters, it is presumed) for legal correctness. A third commenter suggests that all of the rulings issued by the Regional Commissioner should be advisory only and that Headquarters alone should issue binding rulings.

As previously noted, the Regional Commissioner will not be authorized to make findings with respect to the existence or nonexistence of established and uniform practices. Administrative rulings issued by Customs Headquarters or the Regional Commissioner, which are not published, will be applied only with respect to transactions involving articles identical to those which were the subject of the ruling letter. No other person should rely on a ruling letter or assume that principles of that ruling will be applied in connection with any transaction other than the one described in the letter

The Director, Classification and Value Division, Customs Head-

333-195 O - 80 - 2

quarters, will institute a procedure to review all rulings issued by the Regional Commissioner before publication. Further, all findings with respect to the existence or nonexistence of uniform and established practices will be made by Headquarters. Customs does not agree that all rulings issued by the Regional Commissioner should be reviewed for legal correctness, nor that only Headquarters should issue binding rulings. As previously noted, the NIS possess the requisite expertise to issue rulings relating to the product lines within their areas of expertise.

One commenter suggests that the authority of the Regional Commissioner to modify or revoke ruling letters should be specifically set forth in the regulations and that he should not be allowed to revoke or modify rulings issued by Headquarters. Another states that no modification or revocation of a ruling letter should be allowed to take effect less than 180 days after the date of issue. A third is of the opinion that modifications and revocations of unpublished rulings should be published in the CUSTOMS BULLETIN in the same manner as modifications and revocations of published rulings.

Customs agrees that the Regional Commissioner should not be allowed to modify or revoke: (1) Rulings issued by Headquarters; or (2) other rulings which have been published. Proposed section 177.9(d) has been modified to reflect this change. Because unpublished rulings frequently are made available to the public as an indication of Customs position in regard to previous importations of merchandise, Customs agrees that the public should be given notice if the position is changed. Accordingly, where circumstances warrant, Customs will publish modifications and revocations of unpublished rulings. Further, only Customs Headquarters will be authorized to revoke rulings issued by the Regional Commissioner.

Customs does not agree that there should be a 180-day grace period before the modification or revocation of a ruling letter takes effect. Customs policy in this area is well settled and the commenter did not present sufficient reason for Customs to alter it at this time.

Two commenters suggest that the authority to issue administrative rulings should not be delegated only to the Regional Commissioner, New York, but that each region should be delegated authority to issue rulings in its area of expertise. One commenter believes that the regulations should state specifically that the authority to issue administrative rulings in the New York region is delegated to the Assistant Area Director, Classification and Value.

Customs previously has set forth its reasons for amending part 177 to delegate to the Regional Commissioner, New York, the authority to issue administrative rulings. Because the NIS are knowledgeable in the judicial and administrative precedent relating to their product lines, Customs is of the opinion that of all the nine Customs regions,

the New York NIS are uniquely qualified to issue administrative rulings directly to the general public.

Customs is of the opinion that the authority to issue rulings should be delegated to the Regional Commissioner, New York, as the chief Customs official in the region. He may then redelegate this authority to the appropriate subordinate.

One commenter suggests that a procedure similar to that set forth in section 14.3(g)(1), Customs Manual, be established providing for Headquarters resolution of difference cases between counterpart import specialists before issuance of a binding ruling by New York.

Customs does not believe that such a procedure is necessary. As previously stated, only Headquarters will issue rulings in difference cases. These cases will not be referred to New York for the issuance of rulings.

Although an individual now must request at the time of filing that privileged or confidential material not be disclosed, another commenter believes that all identifying material in ruling requests should be presumed to be confidential and should not be disclosed without the permission of the requesting party. The commenter also suggests that the regulations provide that a request for nondisclosure may be made at any time before issuance of the ruling.

Customs agrees that a request for nondisclosure should be made any time before issuance of a ruling. Sections 177.2(b)(7) and 177.8 (a)(3) have been modified accordingly. However, because it would be inconsistent with present law (5 U.S.C. 552), Customs cannot presume that all identifying matter in ruling requests is privileged or confidential.

Several comments relating to staffing and workload considerations are not being addressed at this time because they are management concerns.

REGULATIONS DETERMINED TO BE NONSIGNIFICANT

In a directive published in the Federal Register on November 8, 1978 (43 F.R. 52120), implementing Executive Order 12044, Improving Government Regulations, the Treasury Department stated that it considers each regulation or amendment to an existing regulation published in the Federal Register and codified in the Code of Federal Regulations to be significant. However, regulations which are nonsubstantive, essentially procedural, which do not materially change existing or establish new policy, and which do not impose substantial additional requirements or costs on, or substantially alter the legal rights or obligations of, those affected, with Secretarial approval, may be determined not to be significant. Accordingly, it has been determined that this document does not meet the

Treasury Department criteria in the directive for significant regulations.

DRAFTING INFORMATION

The principal author of this document was Lawrence P. Dunham, Regulations and Research Division, Office of Regulations and Rulings, U.S. Customs Service. However, personnel from other Customs offices participated in this development.

ADOPTION OF THE PROPOSED REGULATIONS

The proposed regulations set forth in the notice published in the Federal Register on July 25, 1980 (45 F.R. 49591), are adopted subject to the revisions made below. Certain other nonsubstantive changes also have been included in the document.

AMENDMENTS TO THE REGULATIONS

Part 177, Customs Regulations (19 CFR part 177), is amended as set forth below.

WILLIAM T. ARCHEY
(For Commissioner of Customs).

Approved: November 17, 1980.
RICHARD J. DAVIS,
Assistant Secretary of the Treasury.

[Published in the Federal Register, December 3, 1980 (45 F.R. 80100)]

PART 177—ADMINISTRATIVE RULINGS

1. Section 177.0 is amended to read as follows:

§ *177.0 Scope.*

This part relates to the issuance of rulings to importers and other interested persons by the Headquarters Office of the United States Customs Service or the Regional Commissioner of Customs, Region II, New York ("Regional Commissioner, Region II"). It describes the situations in which a ruling may be requested, the procedures to be followed in requesting a ruling, the conditions under which a ruling will be issued, the effect of a ruling when it is issued, and the publication of rulings in the CUSTOMS BULLETIN. The rulings issued under the provisions of this part will usually be prospective in application and, consequently, will usually not relate to specific matters or situations presently or previously under consideration by any Customs Service field office. Accordingly, the rulings requested under the provisions of this part should be distinguished from the administrative rulings, determinations, or decisions which may be requested under procedures

set forth elsewhere in this chapter, including, but not limited to, those set forth in Part 12 (relating to submissions of proof of admissibility of articles detained under section 307 of the Tariff Act of 1930 (19 U.S.C. 1307)). Part 103 (relating to disclosure of information in Customs files), Part 133 (relating to disputed claims of piratical copying of copyrighted matter), Subpart C of Part 152 (relating to determinations concerning the dutiable value of merchandise by Customs field officers), Part 153 (relating to enforcement of the Antidumping Act, 1921, as amended), Part 159 (insofar as it relates to countervailing duties), Part 171 (relating to fines, penalties, and forfeitures), Part 172 (relating to liquidated damages), Part 174 (relating to protests), and Part 175 (relating to petitions filed by American manufacturers, producers, or wholesalers pursuant to section 516 of the Tariff Act of 1930, as amended). Nor do the provisions of Part 177 apply to requests for decisions of an operational, administrative, or investigative nature which are properly within the cognizance of a Customs Headquarters Office other than the Office of Regulations and Rulings.

2. Sections 177.1 (a)(1), (b), and (d) (1) and (2) are amended to read as follows:

§ *177.1 General ruling practice and definitions.*

(a) *The issuance of rulings generally*—(1) *Prospective transactions.* It is in the interest of the sound administration of the Customs and related laws that persons engaging in any transaction affected by those laws fully understand the consequences of that transaction prior to its consummation. For this reason, the Headquarters Office of the United States Customs Service or the Regional Commissioner, Region II, will give full and careful consideration to written requests from importers or other interested parties for rulings or information setting forth, with respect to a specifically described Customs transaction, a definitive interpretation of applicable law, or other appropriate information. Generally, a ruling may be requested under the provisions of this part only with respect to prospective transactions—that is, transactions which are not already pending before a Customs Service office by reason of arrival, entry, or otherwise.

* * * * * * *

(b) *Oral advice.* The Customs Service will not issue rulings in response to oral requests. Oral opinions or advice of Customs Service personnel are not binding on the Customs Service. However, oral inquiries may be made to Customs Service offices regarding existing rulings, the scope of such rulings, the types of transactions with respect to which the Headquarters Office or the Regional Commissioner, Region II, will issue rulings, the scope of the rulings which may be

issued, or the procedures to be followed in submitting ruling requests, as described in this part.

* * * * * * *

(d) *Definitions.* (1) A "ruling" is a written statement issued by the Headquarters Office or the Regional Commissioner, Region II, that interprets and applies the provisions of the Customs and related laws to a specific set of facts. A "ruling letter" is a ruling issued in response to a written request therefor and set forth in a letter addressed to the person making the request or his designee. A "published ruling" is a ruling which has been published in the CUSTOMS BULLETIN.

(2) An "information letter" is a written statement issued by the Headquarters Office or the Regional Commissioner, Region II, that does no more than call attention to a well-established interpretation or principle of Customs law, without applying it to a particular set of facts. An information letter may be issued in response to a request for a ruling when (i) the request suggests that general information, rather than a ruling, is actually being sought, (ii) the request is incomplete or otherwise fails to meet the requirements set forth in this part, or (iii) the ruling requested cannot be issued for any other reason, and (iv) it is believed that general information may be of some benefit to the party making the request.

* * * * * * *

3. Sections 177.2 (a), (b)(2)(ii), (b)(7), and (d) are amended to read as follows:

§ *177.2 Submission of ruling requests.*

(a) *Form.* A request for a ruling should be in the form of a letter. Requests for Valuation and Carrier rulings should be addressed to the Commissioner of Customs, Attention: Office of Regulations and Rulings, Washington, D.C. 20229. The Division and Branch in the Office of Regulations and Rulings to which the requests should be directed may also be indicated, if known. Requests for Tariff Classification rulings should be addressed to the Regional Commissioner of Customs, Region II, Attn: Classification and Ruling Requests, New York, New York 10048.

(b) * * *

(1) * * *

(2) * * *

(ii) *Tariff classification rulings.*

(A) If the transaction involves the importation of an article for which a ruling as to its proper classification under the provisions of the Tariff Schedules of the United States is requested, the request for a ruling should include a full and complete description of the

article and whenever germane to the proper classification of the article, information as to the article's chief use in the United States, its commercial, common, or technical designation, and, where the article is composed of two or more materials, the relative quantity (by weight and by volume) and value of each. The ruling request should also note, whenever germane, the purchase price of the article, and its approximate selling price in the United States.

(B) Ruling letters issued by the Regional Commissioner, Region II, are limited to prospective transactions. The Regional Commissioner, Region II, shall not prepare final decisions under section 177.11 (Requests for Advice by Field Offices), section 174.23 (Further Review of Protests), section 177.10 (Change of Practice), 19 U.S.C. 1516 (petitions under section 516, Tariff Act of 1930), or 14.3(g)(1) Customs Manual ("difference cases").

(C) The requesting party may send the request directly to the Director, Classification and Value Division, U.S. Customs Service, Washington, D.C. 20229. The Headquarters Office retains authority to independently review all tariff classification ruling letters issued by the Regional Commissioner, Region II. If the importer or other person to whom a ruling letter is issued disagrees with the tariff classification set forth, he may petition the Director, Classification and Value Division, U.S. Customs Service, Washington, D.C., for review of the ruling.

* * * * * * *

(7) *Privileged or confidential information.* Information which is claimed to constitute trade secrets or privileged or confidential commercial or financial information regarding the business transactions of private parties the disclosure of which would cause substantial harm to the competitive position of the person making the request (or of another interested party), must be identified clearly and the reasons such information should not be disclosed, including, where applicable, the reasons the disclosure of the information would prejudice the competitive position of the person making the request (or of another interested party) must be set forth.

(d) *Requests for immediate consideration.* The Headquarters Office and the Regional Commissioner, Region II, will normally process requests for rulings in the order they are received and as expeditiously as possible. However, a request that a particular matter be given consideration ahead of its regular order, if made in writing at the time the request is submitted, or subsequent thereto, and showing a clear need for such treatment, will be given consideration as the particular circumstances warrant and permit. Requests for special consideration made by telegram will be treated in the same manner

as requests made by letter, but rulings will not ordinarily be issued by telegram. In no event can any assurance be given that a particular request for a ruling will be acted upon by the time requested. However, upon request and where a clear need is shown for such action, a collect telephone call will be made to advise that the ruling letter has been issued and is being mailed.

4. Sections 177.4 (a) and (b) are amended to read as follows:

§ *177.4. Oral discussion of issues.*

(a) *Generally.* A person submitting a request for a ruling and desiring an opportunity to orally discuss the issue or issues involved should indicate that desire in writing at the time the ruling request is filed Such a discussion will only be scheduled when, in the opinion of the Customs personnel by whom the ruling request is under consideration, a conference will be helpful in deciding the issue or issues involved or when a determination or conclusion contrary to that advocated in the ruling request is contemplated. Conferences are scheduled for the purpose of affording the parties an opportunity to freely and openly discuss the matters set forth in the ruling request. Accordingly, the parties will not be bound by any argument or position advocated or agreed to, expressly or by implication, during the conference unless either party subsequently agrees to be so bound in writing. The conference will not conclude with the issuance of a ruling letter.

(b) *Time, place, and number of conferences.* If a request for a conference is granted, the person making the request will be notified of the time and place of the conference. Except under highly unusual circumstances, the conference will be held at the Headquarters Office of the Customs Service in Washington, D.C., or at Region II, New York. No more than one conference with respect to the matters set forth in a ruling request will be scheduled, unless, in the opinion of the Customs personnel by whom the ruling request is under consideration, additional conferences are necessary.

* * * * * * *

5. Section 177.5 is amended to read as follows:

§ *177.5 Change in status of transaction.*

Each person submitting a request for a ruling in connection with a Customs transaction shall immediately advise Customs in writing of any change in the status of that transaction, as defined in § 177.1(d)(3). In particular, the Headquarters Office or the Regional Commissioner, Region II, must be advised when any transaction described in the ruling request as prospective becomes current and under the jurisdiction of any Customs Service field office. In addition, any person engaged in a Customs transaction coming under the jurisdiction of a Customs Service field office and having previously requested a ruling

with respect to that transaction shall advise the field office of that fact. The field office will normally withhold action with respect to any transaction for which a ruling has previously been requested pending the disposition of the ruling request.

6. Section 177.6 is amended to read as follows:

§ *177.6 Withdrawal of ruling requests.*

Any request for a ruling may be withdrawn by the person submitting it at any time before the issuance of a ruling letter or any other final disposition of the request. All correspondence, documents, and exhibits submitted in connection with the request will be retained in the Customs Service file and will not be returned. In addition, the Headquarters Office may forward to Customs Service field offices which have or may have jurisdiction over the transaction to which the ruling request relates, its views in regard to the transaction or the issues involved therein, as well as appropriate information derived from materials in the Customs Service file.

7. Sections 177.8(a)(1), (2), and (3), are amended to read as follows:

§ *177.8 Issuance of rulings.*

(a) *Ruling letters*—(1) *Generally.* The Headquarters Office and the Regional Commissioner, Region II, will endeavor to issue ruling letters setting forth their determinations with respect to a specifically-described Customs transaction whenever a request for such a ruling is submitted in accordance with the provisions of this part and it is in the interest of the sound administration of the Customs and related laws to do so. Otherwise, a request for a ruling will be answered by an information letter or, in those situations in which general information is likely to be of little or no value, by a letter stating that no ruling can be issued.

(2) *Submission of ruling letters to field officers.* Any person engaging in a Customs transaction with respect to which a ruling letter has been issued by the Headquarters Office or the Regional Commissioner, Region II, shall ascertain that a copy of the ruling letter is attached to the documents filed in connection with that transaction with the appropriate Customs Service field office or otherwise bring the ruling to the attention of the appropriate Customs officer. A copy of any ruling letter received after the filing of such documents shall be forwarded immediately to the appropriate Customs Service field office.

(3) *Disclosure of ruling letters.* The ruling letter shall be based on the information set forth in the ruling request. No part of the ruling letter, including names, addresses, or information relating to the business transactions of private parties, shall be deemed to constitute privileged or confidential commercial or financial information or trade secrets exempt from disclosure pursuant to the Freedom of Informa-

333-195 O - 80 - 3

tion Act, as amended (5 U.S.C. 552), unless, as provided in § 177.2(b)(7), the information claimed to be exempt from disclosure is clearly identified and the reasons for the exemption are set forth. Before the issuance of the ruling letter, the person submitting the ruling request will be notified of any decision adverse to his claim for exemption from disclosure and will, upon written request to Customs within 10 working days of the date of notification, be permitted to withdraw the ruling request. All ruling letters issued by the Headquarters Office or the Regional Commissioner, Region II, will be available, upon written request, for inspection and copying by any person (with any portions determined to be exempt from disclosure deleted).

* * * * * * *

8. Sections 177.9(a) and (d) are amended to read as follows:

§ *177.9 Effect or ruling letters; modification or revocation.*

(a) *Effect of ruling letters generally.* A ruling letter issued by the Headquarters Office or the Regional Commissioner, Region II, under the provisions of this part represents the official position of the Customs Service with respect to the particular transaction or issue described therein and is binding on all Customs Service personnel in accordance with the provisions of this section until modified or revoked. In the absence of a subsequent change of practice or other modification or revocation which affects the principle of the ruling set forth in the ruling letter, that principle may be cited as authority in the disposition of transactions involving the same circumstances.

* * * * * * *

(d) *Modification or revocation of ruling letters*—(1) *Generally.* Any ruling letter found to be in error or not in accordance with the current views of the Customs Service may be modified or revoked. Modification or revocation of a ruling letter shall be affected by Customs Headquarters by giving notice to the person to whom the ruling letter was addressed and, where circumstances warrant, by the publication of a notice or other statement in the Customs Bulletin.

(2) *Effect of modification or revocation of ruling letters.* The modification or revocation of a ruling letter will not be applied retroactively with respect to the person to whom the ruling was issued, or to any person directly involved in the transaction to which that ruling related, provided (i) The request for a ruling contained no misstatement or omission of material facts,

(ii) The facts subsequently developed are not materially different from the facts on which the ruling was based,

(iii) There has been no change in the applicable law,

(iv) The ruling was originally issued with respect to a prospective transaction, and

(v) All of the parties involved in the transaction acted in good faith in reliance upon the ruling and retroactive modification or revocation would be to their detriment.

Nothing in this subparagraph will prohibit the retroactive modification or revocation of a ruling with respect to a transaction which was not prospective at the time the ruling was issued, inasmuch as such a transaction was not entered into in reliance on a ruling from the Headquarters Office or the Regional Commissioner, Region II.

9. Sections 177.11(b)(1) is amended to read as follows:

§ 177.11 Requests for advice by field offices.

* * * * * * *

(b) *Certain current transactions (1) When a ruling has been issued*—(i) *Requests by field officers.* If the Headquarters Office, or the Regional Commissioner, Region II, has issued a ruling letter with respect to a particular Customs transaction and the Customs Service field office having jurisdiction over that transaction feels that the ruling should be modified or revoked, the field office will forward to the Headquarters Office, pursuant to § 177.9(b)(1), a request that the ruling be reconsidered. The field office will notify the importer or other person to whom the ruling letter was issued, in writing, that it has requested the Headquarters Office to reconsider the ruling.

* * * * * * *

(R.S. 251, as amended, sec. 624, 46 Stat. 759, 77A Stat. 14 (5 U.S.C. 301, 19 U.S.C. 66, 1202 (General Headnote 11), 1624))

(T.D. 80-286)

General Notice

Vessels in foreign and domestic trades; fee schedule for vessel services

AGENCY: U.S. Customs Service, Department of the Treasury.

ACTION: General notice.

SUMMARY: The Customs Procedural Reform and Simplification Act of 1978 repealed several statutes under which Customs charged and collected fees for specific services provided to vessels by Customs officers. That act authorized the Secretary of the Treasury to establish a new schedule of fees to return to the Government the approximate costs of the services provided. This document sets forth the revised schedule of fees to be charged and collected for 1981 for the specified services.

EFFECTIVE DATE: January 1, 1981.

FOR FURTHER INFORMATION CONTACT: Jerry Laderberg, Carriers, Drawback and Bonds Division, U.S. Customs Service, 1301 Constitution Avenue NW., Washington, D.C. 20229; 202-566-5706.

SUPPLEMENTARY INFORMATION:

BACKGROUND

Public Law 95-410, the Customs Procedural Reform and Simplification Act of 1978, approved October 3, 1978 (the act), repealed sections 2654, 4381, 4382, and 4383 of the Revised Statutes of the United States (19 U.S.C. 58; 46 U.S.C. 329, 330, and 333), the statutory authority under which Customs had been charging and collecting fees for specific services provided to vessels by Customs officers.

Because these navigation fees, which are set forth in section 4.98(a), Customs Regulations (19 CFR 4.98(a)), did not cover the costs of providing the services, section 214 of the act authorized the Secretary of the Treasury to establish a new schedule of fees to be charged and collected for furnishing these services. The fees are to be consistent with section 501 of the Independent Offices Appropriation Act, 1952 (31 U.S.C. 483a), the so-called user charges statute, which provides that the costs of specific services for private interests shall be reimbursed to the Government.

By T.D. 80-25, published in the Federal Register on January 18, 1980 (45 F.R. 3570), Customs established a fee schedule to be used for 1980, and amended section 4.98(a), Customs Regulations, to provide that a revised fee schedule will be published in the Federal Register and CUSTOMS BULLETIN in December of each year setting forth a revised schedule of navigation fees for the specified vessel services to be performed during the following year. The revised fee schedule is to reflect changes in the rate of compensation paid to the Customs officer performing the service. The fees are to be calculated in accordance with sections 19.5(b) and 24.17(d), Customs Regulations (19 CFR 19.5(b), 24.17(d)), and based upon the amount of time the average service requires of a Customs officer in the fifth step of GS-9.

Because of the Federal pay increase which became effective October 5, 1980, it is necessary for Customs to revise the schedule of fees for 1981 to take into account this increased cost in accordance with section 4.98(a), Customs Regulations. The hourly rate utilized is $13.88, thereby reflecting the change in the rate of compensation paid to a Customs officer in the fifth step of GS-9 performing the service. The fees have been rounded off to the nearest tenth of a dollar.

ACTION

The following revised schedule of navigation fees shall be effective during 1981:

Fee number and description of services:	*Fee*
1 Entry of vessel, including American, from foreign port:	
(a) Less than 100 net tons	$6. 90
(b) 100 net tons and over	13. 90
2 Clearance of vessel, including American to foreign port:	
(a) Less than 100 net tons	6. 90
(b) 100 net tons and over	13. 90
3 Issuing permit to foreign vessel to proceed from district to district, and receiving manifest	13. 90
4 Receiving manifest of foreign vessel on arrival from another district, and granting a permit to unlade	13. 90
5 Receiving post entry	6. 90
6 Receiving official bond not otherwise provided for	3. 50
7 Certifying payment of tonnage tax for foreign vessels only	3. 50
8 Furnishing copy of official document, including certified outward foreign manifest, and others not elsewhere enumerated	13. 90

AUTHORITY

R.S. 251, as amended, sec. 501, 65 Stat. 290, 92 Stat. 888 (19 U.S.C. 66, 31 U.S.C. 483(a), Public Law 95–410).

DRAFTING INFORMATION

The principal author of this document was Charles D. Ressin, Regulations and Research Division, Office of Regulations and Rulings, U.S. Customs Service. However, personnel from other Customs offices participated in its development.

Dated: November 17, 1980.

WILLIAM T. ARCHEY
(For Commissioner of Customs).

[Published in the Federal Register, December 3, 1980 (45 F.R. 80245)]

(T.D. 80–287)

Air Commerce—Customs Regulations Amended

Section 6.10, Customs Regulations, relating to the applicability to aircraft of Customs laws and regulations applicable to vessels, amended

TITLE 19—CUSTOMS DUTIES

CHAPTER I—U.S. CUSTOMS SERVICE

PART 6—AIR COMMERCE REGULATIONS

AGENCY: U.S. Customs Service, Department of the Treasury.

ACTION: Final rule.

SUMMARY: This document amends the Customs Regulations to provide that aircraft arriving from any foreign territory and the

persons and merchandise, including baggage, carried on the aircraft shall be subject to the vessel laws and regulations enforced and administered by Customs.

The amendment ends a difference in treatment whereby aircraft arriving from contiguous foreign territory (Canada or Mexico) were not subject to the same administrative and enforcement provisions as aircraft arriving from noncontiguous foreign territory.

EFFECTIVE DATE: 30 days after publication in the Federal Register.

FOR FURTHER INFORMATION CONTACT: Stuart P. Siedel, Office of the Chief Counsel, U.S. Customs Service, 1301 Constitution Avenue NW., Washington, D.C. 20229; 202-566-2482.

SUPPLEMENTARY INFORMATION:

BACKGROUND

The inability to apply the provisions of the Anti-Smuggling Act of 1935 (the act) (19 U.S.C. 1701 et seq.) to aircraft arriving from contiguous foreign territory has hampered Customs enforcement efforts on the United States-Mexico border.

In particular, section 3 of the act (19 U.S.C. 1703) provides for the seizure and forfeiture of vessels built, purchased, or fitted out for the purpose of being employed to defraud the revenue or to smuggle merchandise into the United States or into the territory of a foreign government (providing the foreign government has reciprocal provisions with respect to the laws of the United States). That section further provides that the fact that the vessel has become subject to pursuit as provided in 19 U.S.C. 1581, or fails to display lights as required by law, shall be prima facie evidence that the vessel is being employed to defraud the revenue of the United States.

Under 49 U.S.C. 1509, the Secretary of the Treasury is authorized to apply to civil aircraft the laws and regulations relating to the administration of the Customs laws and to the entry and clearance of vessels, to such extent as the Secretary deems necessary. It is Customs position that under 49 U.S.C. 1509, the provisions of the act relating to seizure of vessels fitted out for smuggling or not displaying lights (19 U.S.C. 1703), are applicable to aircraft, regardless of the origin of the flight. An aircraft thus could be seized under 19 U.S.C. 1703 for having been employed to defraud the revenue or to smuggle merchandise. Operating without lights would constitute a statutory presumption of such violation. However, because of the existing wording of section 6.10, Customs Regulations (19 CFR 6.10), 19 U.S.C. 1703 applies only to aircraft arriving from noncontiguous foreign territories.

Customs officers have documented an increasing number of aircraft crossing the United States-Mexico border under cover of darkness to avoid detection and apprehension. All aircraft are required to display navigation lights after sunset and before sunrise by the Federal Aviation Administration regulations (14 CFR 91.73). Numerous instances of aircraft flying without navigation lights have been detected by Customs officers along the border and many aircraft have been found with seats removed or otherwise altered or fitted out for smuggling. Customs believes that many of these smuggler aircraft could be detected and apprehended if the appropriate Customs laws were applied. Accordingly, on December 17, 1979, a notice was published in the Federal Register (44 F.R. 73122) proposing to amend section 6.10 to provide for the application to aircraft arriving or having arrived from any foreign territory of all enforcement and administrative provisions administered by Customs which are applicable to vessels arriving or having arrived from a foreign port or place. Comments were to have been received on or before February 15, 1980.

DISCUSSION OF COMMENT

The only comment received in response to the proposal raised the following issues:

1. Why section 6.10 differentiated between aircraft arriving from noncontiguous and contiguous foreign territory?

2. How 19 U.S.C. 1703 could serve as the statutory basis for the proposed change because aircraft are specifically excluded by 19 U.S.C. 1401 from the term vessel? and

3. Whether including aircraft within the definition of vessel serves to alter or amend a revenue law by regulation as proscribed by *Morrill* v. *Jones*, 106 U.S. 466 (1882)?

With regard to the first issue, there is no logical or legal argument for preventing an otherwise lawful regulatory amendment merely because the existing regulatory language, written over 40 years ago, can no longer accurately be explained.

As to the second issue, 49 U.S.C. 1509 states that:

* * * * * * *

(b) The Secretary of the Treasury is authorized * * * (3) by regulation to provide for the application to civil air navigation of the laws and regulations relating to the administration of the customs laws to such extent and upon such conditions as he deems necessary.

(c) The Secretary of the Treasury is authorized by regulation to provide for the application to civil aircraft of the laws and regulations relating to the entry and clearance of vessels to such extent and upon such conditions as he deems necessary.

* * * * * * *

Further, 49 U.S.C. section 1474 provides penalties for the violation of 49 U.S.C. 1509. Hence, title 49 provides the Secretary of the Treasury with the statutory authority to treat aircraft as though they were vessels under 19 U.S.C. 1703.

Because title 49, United States Code, clearly provides the Secretary with statutory authority to apply to aircraft by regulation certain provisions of law applicable to vessels, the third issue raised is irrelevant.

Accordingly, the amendment to section 6.10 is adopted as proposed.

INAPPLICABILITY OF EXECUTIVE ORDER 12044

This document is not subject to the Treasury Department directive (43 F.R. 52120) implementing Executive Order 12044, Improving Government Regulations, because the proposal was in process before May 22, 1978, the effective date of the directive.

DRAFTING INFORMATION

The principal author of this document was Todd J. Schneider Office of Regulations and Rulings, U.S. Customs Service. However, personnel from other Customs offices participated in its development.

AMENDMENT TO THE REGULATIONS

Section 6.10, Customs Regulations (19 CFR 6.10), is amended to read as follows:

> 6.10 *General provision.*—Except as otherwise provided for in this part, and insofar as such laws and regulations are applicable, aircraft arriving or having arrived from any foreign port or place and the persons and merchandise including baggage, carried thereon, shall be subject to the laws and regulations applicable to vessels arriving or having arrived from any foreign prot or place, to the extent that such laws and regulations are administered by the Customs Service.

(R S. 251, as amended, section 624, 46 Stat. 759, section 644, 46 Stat. 761, section 904, 72 Stat. 787, section 1109, 72 Stat. 799, as amended (19 U.S.C. 66, 1624, 1644; 49 U.S.C. 1747, 1509).)

WILLIAM T. ARCHEY
(For Commissioner of Customs).

Approved: November 10, 1980.

RICHARD J. DAVIS,
Assistant Secretary of the Treasury.

[Published in the Federal Register December 3, 1980 (45 FR 80099)]

(T.D. 80-288)

Foreign Currencies—Variances From Quarterly Rate

The following rates of exchange are based upon rates certified to the Secretary of the Treasury by the Federal Reserve Bank of New York, pursuant to section 522(c), Tariff Act of 1930, as amended (31 U.S.C. 372(c)), and reflect variances of 5 per centum or more from the quarterly rate published in T.D. 80-249 for the following countries. Therefore, as to entries covering merchandise exported on the dates listed, whenever it is necessary for Customs purposes to convert such currency into currency of the United States, conversion shall be at the following rates:

Brazil cruzeiro:	
November 17-18, 1980	$0. 0163
People's Republic of China yuan:	
November 17, 1980	$0. 658848
November 18-19, 1980	. 654279
November 20, 1980	. 659544
November 21, 1980	. 656254
Hong Kong dollar:	
November 17, 1980	$0. 194894
November 18, 1980	. 195122
November 19, 1980	. 195733
November 20, 1980	. 196040
November 21, 1980	. 196406
Iran rial:	
November 17-21, 1980	Not available
Philippines peso:	
November 17-21, 1980	$0. 1324
Singapore dollar:	
November 17, 1980	$0. 476190
November 18, 1980	. 476985
November 19, 1980	. 477327
November 20, 1980	. 476985
November 21, 1980	. 477555
Thailand baht (tical):	
November 17-21, 1980	$0. 0485
Venezuela bolivar:	
November 17-21, 1980	$0. 2329

(LIQ-3-01 O:C:E)

Dated: November 21, 1980.

NANCY I. BROWN,
Chief,
Customs Information Exchange.

333-195 O - 80 - 4

(T.D. 80–289)

Foreign Currencies—Variances From Quarterly Rate

The following rates of exchange are based upon rates certified to the Secretary of the Treasury by the Federal Reserve Bank of New York, pursuant to section 522(C), Tariff Act of 1930, as amended (31 U.S.C. 372(c)), and reflect variances of 5 per centum or more from the quarterly rate published in T.D. 80–249 for the following countries. Therefore, as to entries covering merchandise exported on the dates listed whenever it is necessary for Customs purposes to convert such currency into currency of the United States, conversion shall be at the following rates.

Austria schilling:

November 17, 1980	$0.073233
November 18, 1980	.073126
November 19, 1980	.073964
November 20, 1980	.073638
November 21, 1980	.073260

Belgium franc:

November 17, 1980	$0.032206
November 18, 1980	.032489
November 19, 1980	.032712
November 20–21, 1980	.032489

Denmark krone:

November 17, 1980	$0.168606
November 18, 1980	.170010
November 19–20, 1980	Quarterly
November 21, 1980	.169176

France franc:

November 17, 1980	$0.223464
November 18, 1980	.224820
November 19, 1980	Quarterly
November 20, 1980	.225479
November 21, 1980	.224467

Germany deutsche mark:

November 17, 1980	$0.517866
November 18, 1980	.521105
November 19, 1980	Quarterly
November 20, 1980	.522248
November 21, 1980	.521648

Ireland pound:	
November 17, 1980	$1.9320
November 18, 1980	1.9450
November 19, 1980	1.9550
November 20–21, 1980	1.9480
Italy lira:	
November 17, 1980	$0.001092
November 18, 1980	.001096
November 19, 1980	.001104
November 20, 1980	.001100
November 21, 1980	.001096
Netherlands guilder:	
November 17, 1980	$0.477441
November 18, 1980	.480307
November 19, 1980	Quarterly
November 20, 1980	.482393
November 21, 1980	.481348
Sri Lanka rupee:	
November 17–21, 1980	$0.058140
Switzerland franc:	
November 17, 1980	$0.575705

(LIQ-3-01 O:C:E)
Dated: November 21, 1980.

NANCY I. BROWN,
Chief,
Customs Information Exchange.

ERRATUM

In CUSTOMS BULLETIN, volume 14, No. 42, dated October 15, 1980, in T.D. 80-241, on page 4, change district to read New Orleans, La., not Nashville, Tenn.

United States Court of International Trade

One Federal Plaza

New York, N.Y. 10007

Chief Judge

Edward D. Re

Judges

Paul P. Rao
Morgan Ford
Scovel Richardson
Frederick Landis
James L. Watson
Herbert N. Maletz
Bernard Newman
Nils A. Boe

Senior Judge

Samuel M. Rosenstein

Clerk

Joseph E. Lombardi

(Slip Op. 80-3)

MERRY MARY FABRICS, INC., PLAINTIFF, *v.* UNITED STATES, DEFENDANT

Fabrics of special construction—Velveteen—Velvet

Court No. 75-1-00260

COMMON AND COMMERCIAL MEANING

Generally, tariff terms are to be construed in accordance with their common and commercial meanings, which are presumed to be the same. *United States* v. *C. J. Tower & Sons of Buffalo, N.Y.*, 48 CCPA 87, C.A.D. 770 (1961).

LEGISLATIVE INTENT—AMBIGUITY

The basic rule in construing tariff acts is to interpret them so as to carry out the intent of Congress. *Brecht Corp.* v. *United States*, 25 CCPA 9, T.D. 48977, *cert. denied*, 302 U.S. 719 (1937) *S. & T; Imports, Inc.* v. *United States*, 78 Cust. Ct. 45, C.D. 4690 (1977). Where doubt or ambiguity exists as to the meaning of a statute it is proper for the court to consult legislative history to resolve the

issue. *United States* v. *Kung Chen Fur Corporation*, 38 CCPA 107, C.A.D. 447 (1951); *J. E. Bernard Co.* v. *United States*, 81 Cust. Ct. 60, C.D. 4766 (1978). While courts may not resort to legislative history or other extraneous matters to create an ambiguity, they may refer to such matters to support the validity of their conclusion. *United States* v. *J. E. Bernard & Co., Inc.*, 42 CCPA 69, C.A.D. 573 (1954).

Certain merchandise imported into the United States was classified by Customs as velvet under TSUS item 346.35. Importer contended it should be classified as velveteen under TSUS item 346.15 and alternatively, the requirements for the classification of velvet and velveteen are dual and that the imported merchandise should be classified instead under TSUS item 346.45 as "other" cotton fabrics.

HELD.

The evidence, legislative intent, and legal authority establish that the difference between velvet and velveteen is a matter having to do with the construction of the imported merchandise and that the imported merchandise was not shown to be improperly classified as velvet by Customs.

[Judgment for defendant.]

(Decided November 18, 1980)

Glad, Tuttle & White (*Robert Glenn White* at the trial and on the briefs) for the plaintiff.

Alice Daniel, Assistant Attorney General; *Joseph I. Liebman*, Attorney in Charge, Field Office for Customs Litigation (*Jerry P. Wiskin* at the trial and on the brief), for the defendant.

Lamb & Lerch (*David A. Golden* at the trial) amicus curiae.

LANDIS, Judge: This action was tried before me at Los Angeles, California, and involves the classification of a cotton pile fabric which originated in the People's Republic of China, was shipped to Hong Kong and exported subsequently from Hong Kong to the United States in May 1972.

Customs officials classified the fabric as velvet under the Tariff Schedules of the United States (TSUS) item 346.35, dutiable at 70 per centum ad valorem.[1]

Plaintiff contends that the fabric is properly classifiable as plainback velveteen, dutiable at 31.25 per centum ad valorem pursuant to TSUS item 346.15. Alternatively, plaintiff contends that the fabric in issue is neither velvet nor velveteen and is classifiable as other cotton pile fabrics under TSUS item 346.45, dutiable at 40 per centum ad valorem.

---

[1] Pursuant to headnote 3(e) of the General Headnotes and Rules of Interpretation of TSUS (1972), the appropriate rate is that stated in col. 2 of the items of the tariff schedules in issue. Nondiscriminatory treatment to the products of the People's Republic of China has been granted only recently pursuant to Presidential Proclamation 4697, dated Oct 23, 1979, which amended headnote 3(f) effective Feb 1, 1980, following adoption of a concurrent resolution by Congress on Jan. 24, 1980.

At trial,[2] plaintiff urged that if the merchandise ultimately was deemed velvet, the proper rate of duty should be 62½ and not 70 per centum ad valorem, which additional claim this court directed at trial should be reduced to writing. Plaintiff has now abandoned this contention but has not abandoned the alternative contention that the imported textile is neither velveteen nor velvet, but rather other cotton pile fabrics under TSUS item 346.45.

The pertinent provisions of TSUS relative to the respective classification made by Customs and claimed by plaintiff and the duty assessments thereunder appear in subpart A, part 4, schedule 3, and are as follows:

SCHEDULE 3.—TEXTILE FIBERS AND TEXTILE PRODUCTS

* * * * * * *

PART 4.—FABRICS OF SPECIAL CONSTRUCTION OR FOR SPECIAL PURPOSES; ARTICLES OF WADDING OR FELT; FISH NETS; MACHINE CLOTHING

* * * * * * *

Subpart A.—Knit, Pile, Tufted, and Narrow Fabrics; Braids, and Elastic Fabrics

* * * * * * *

Pile fabrics, in which the pile was inserted or knotted during the weaving or knitting, whether or not the pile covers the entire surface, and whether the pile is wholly or partly cut or is not cut:
Of cotton:

* * * * * * *

[*Claimed under:*]

Velveteens:

346.15 Plain-back ..... 31.25% ad val.

* * * * * * *

[*Classified under:*]

346.35 Velvets, plushes, and velours ..... 70% ad val.

* * * * * * *

[*Alternatively claimed under:*]

346.45 Other ..... 40% ad val.

---

[2] At the commencement of the trial the court granted plaintiff permission to amend its complaint setting forth a third cause of action based upon the theory that Congress has not legislated a duty for cotton velvet in excess of 62½ per centum ad valorem and that the 70 per centum ad valorem duty was a result of Presidential Proclamation 2019 (T.D. 46048). The amendment further contends that this Proclamation was abrogated by T.D. 51802 which itself has not been abrogated thereby reinstating the Presidential Proclamation and the higher ad valorem rate for velvet. This third cause of action was withdrawn specifically by plaintiff by a statement to that effect in its opening brief.

Seven witnesses testified during the course of the trial.

Plaintiff's four witnesses either were buyers or sellers of fabrics including velvet and velveteen or utilized or had experience with velvet and velveteen in production of wearing apparel. Each of such witnesses of plaintiff testified the imported merchandise was velveteen. Their main criteria for determining the difference between velvet and velveteen was the feel of the fabric, the direction of the pile, the drape of the fabric, the method of shipping the fabric, the reputation of the company from whom they were purchasing the fabric and the different uses of the fabric. None of plaintiff's witnesses possessed a technical knowledge or background in the manufacturing of velvet or velveteen.

Two of defendant's witnesses were associated with Crompton Co. which at the time was the sole domestic producer and manufacturer of velveteen. William Cooke was Crompton's corporate director of fabric development. Wayne Snyder was corporate director of energy conservation and water management of said company and was formerly director of research for Crompton. These witnesses testified in substance that a stipulated portion of the imported merchandise was velvet and that the difference between velvet and velveteen is essentially in the construction of the fabrics. These two witnesses for defendant testified to the effect that the imported merchandise contains a warp thread and a filling thread, and that the difference is that velvet contains an additional warp thread forming the pile, while velveteen contains an additional filling thread forming the pile. Both witnesses possessed good credentials and a strong background in the manufacturing of the fabrics. Defendant's remaining witness was basically a jobber of merchandise whose testimony was relatively useless.

Initially, the court must determine the appropriate test for the classification of the fabric in issue. Plaintiff urges that classification should be based upon the common meaning and understanding attributed to the imported merchandise by those who are engaged in buying and selling the merchandise in trade and commerce. No separate commercial designation having been alleged or proven, defendant argues that the imported merchandise should be classified in accordance with the common meaning accorded the terms velvet and velveteen by the manufacturers of such textiles who make most of the sales. Plaintiff's argument is essentially one directed to the external appearance and general outward physical characteristics of the completed fabric such as feel, handling and its less luxurious effect, while defendant's argument is one of construction.

The basic rule in construing tariff acts is to interpret them so as to carry out the intent of Congress. *Brecht Corp.* v. *United States.* 25 CCPA 9, T.D. 48977, *cert. denied,* 302 U.S. 719 (1937); *S & T*

Imports, Inc. v. *United States*, 78 Cust. Ct. 45, C.D. 4690 (1977). Where doubt or ambiguity exists as to the meaning of a statute it is proper for the court to consult legislative history to resolve the issue. *United States* v. *Kung Chen Fur Corporation*, 38 CCPA 107, C.A.D. 447 (1951); *J. E. Bernard Co.* v. *United States*, 81 Cust. Ct. 60, C.D. 4766 (1978). While courts may not resort to legislative history or other extraneous matters to create an ambiguity, they may refer to such matters to support the validity of their conclusion. *United States* v. *J. E. Bernard & Co., Inc.*, 42 CCPA 69, C.A.D. 573 (1954). Generally, tariff terms are to be construed in accordance with their common and commercial meanings, which are presumed to be the same. *United States* v. *C. J. Tower & Sons of Buffalo, N.Y.*, 48 CCPA 87, C.A.D. 770 (1961). Congress is presumed to know the language of commerce and to have framed the tariff acts so as to classify commodities according to the general usage and denomination of the trade. *Nylos Trading Company* v. *United States*, 37 CCPA 71, C.A.D. 422 (1949).

The primary source for the determination of legislative intent is the statutory language itself. *United States* v. *Gulf Oil Corporation, et al.*, 47 CCPA 32, C.A.D. 725 (1959). Of particular significance in the instant case is the fact that both velvet and velveteen are enumerated under the same heading as pile fabrics, etc. The term pile fabrics is a term defined by its basic construction. Webster's Third New International Dictionary (1966), which has been cited by plaintiff in its original brief, defines pile as:

> * * * a mass of raised loops or tufts covering all or part of a fabric or carpet that is formed by extra warp or weft yarns during the weaving and that produces a soft even compact furry or velvety surface.

A standard industry lexicon, also cited by plaintiff in its original brief, namely, Fairchild's Dictionary of Textiles, defines pile as:

> * * * Raised loops, cut interlacings of double cloths or tufts (cut loops), and other erect yarns or fibers deliberately produced on cloth, which form all or part of the surface of the fabric. May be warp pile, filling pile or knotted pile, and may be loops produced by weaving an extra set of yarns over wires which are drawn out of the fabric as weaving progresses.

Both said standard dictionary and industry lexicon define pile in terms of the act of combination of the component parts to form the end result of an integrated object. The term construction is similarly defined by Webster's, supra, as: "* * * 2a. the act of putting parts together to form a complete integrated object". It necessarily follows that where fabrics are enumerated under a heading which is by definition a term of construction, then the legislature in listing the fabrics

under that heading is classifying them according to their construction and not according to the appearance of the end result. No contrary interpretation of the statutory language has been proffered by plaintiff nor has the court on its own research uncovered a different result.

Congressional intent as evidenced by the legislative history of this particular classification and judicial interpretation is completely in accord with the construction theory test for velvet and velveteen. As early as 1890 these fabrics were classified together with all pile fabrics composed of cotton or other vegetable fibers, etc., Tariff Act of 1890 (26 Stat. 567). However, legislative history, based upon discussion in Congress, is silent as to the meaning of velvet and velveteen under the 1890 act.

Subsequent tariff legislation likewise sheds no light on the difference between velvet and velveteen except that they are considered to be pile fabrics.[3]

In anticipation of a general revision of the Tariff Act of 1913, the House Ways and Means Committee commissioned the U.S. Tariff Commission to prepare a summary of the current tariff information for the committee's use in revising the 1913 act. The result was the "Summary of Tariff Information, 1920." [4] This summary described pile fabrics:

> *Pile fabrics* are distinguished from all other woven articles by their surface, which shows a series of short ends or loops issuing from the cloth and usually concealing the interlacing of the wrap and filling. They are of two kinds—warp piles made with two warps and one filling, producing *velvet* and *plush;* and filling piles made with two fillings and one warp, producing such goods as *velveteen* and *corduroy*.

The "Summary of Tariff Information, 1929," prepared for the Ways and Means Committee in expectation of revision of the tariff Act of 1922, which resulted in the passage of the Tariff Act of 1930, described "Cotton Pile Fabrics and Manufacturers of":

> A pile fabric consists of a foundation cloth covered in whole or in part by short projecting ends or loops produced in the weave with an extra set of threads. Technically, pile fabrics are divided according to method of construction into two classes: (1) Filling piles, such as velveteen and corduroy, and (2) warp piles, such as velvet, plush, and terry-woven, fabrics. In all cases the founda-

[3] Tariff Acts of: 1894, 28 Stat. 509; 1897, 30 Stat. 151; 1905, 33 Stat. 928 (Philippine Trade Act); 1909, 36 Stat. 11; and 1913, 38 Stat. 114.

[4] It is judicially well settled that summaries of tariff information specially prepared for the use of congressional committees considering tariff proposals have long been recognized as authoritative for the purpose of resolving questions relating to the meaning and scope of terms which appear in tariff acts and in ascertaining congressional intent. *Keith Dunham Co.* v. *United States*, 26 CCPA 250, C.A.D. 24 (1938); *Sandoz Chemical Works, Inc.* v. *United States*, 43 CCPA 152, C.A.D. 625 (1956).

This court is of course mindful of the statement of Judge Rich in *Hawaiian Motor Company* v. *United States*, 67 CCPA ——, C.A.D. 1241, 617 F. 2d 286 (1980) as to summaries of trade and tariff information not being suitable for use as evidence of congressional intent in all cases.

> tion fabric requires its own set of warp and filling threads, and the pile, whether warp or filling, is made from an additional set of threads. Filling pile is always cut, whereas warp pile may be either cut or loop (uncut).

These two summaries are the leading indicators of legislative intent as to the classification of pile fabrics.[5] Moreover, they succinctly define velvet and velveteen as being pile fabrics constructed in a special way, the difference between the two being whether the extra thread used in construction is of warp quality or filling quality.

Recent judicial interpretation also indicates that construction is the pivotal element in the classification of velvet and velveteen. In *Tilton Textile Corp.* v. *United States*, 77 Cust. Ct. 27, 29, C.D. 4670, 424 F. Supp. 1053, *aff'd*, 65 CCPA 18, C.A.D. 1199, 565 F. 2d 140 (1977), this Court stated:

> Summarizing our conclusions at the outset, we find that, *for tariff classification purposes, velveteen must have a certain characteristic weave* or construction, described *infra*, and a raised pile, which may be wholly or partly cut or not cut, issuing from the fabric and covering its surface at least in part. * * * [Italic added.]

The court then proceeded to define what it meant by this certain characteristic weave:

> The testimony of record conflicts on several points; however, it is not disputed that a common denominator of all pile fabrics is their construction, which consists of a foundation cloth made of warp and filling threads, and an extra set of threads, which may be warp or filling yarns, which form the pile. Essentially, there are two types of pile fabrics; *warp pile fabrics, such as velvet*, plush and terry fabrics, *which are constructed with an additional set of warp threads*; and *filling pile fabrics, such as velveteen* and corduroy, *which are constructed with* an extra set of *filling yarns*. [Italic added.] [Footnotes omitted not being germane to any arguments advanced by plaintiff or defendant.]

To date this is the most declarative judicial pronouncement indicating that the classification of pile fabrics is based solely upon the construction of said fabric and that the individual pile fabric, in turn, is classifiable according to its construction.

In accordance with the euidence, the legislative history, and the

---

[5] There is no significant statement of legislative intent subsequent to the "1929 Summary of Tariff Information." The "Summary of Tariff Information (1948)" merely advises that there are two groups of velveteen, plain-back and twill-back, and singularly defines both as cotton velveteens which "* * * are filling-pile fabrics in which part of the filling is cut to form a pile which spreads uniformly over the entire surface of the fabric."

The Tariff Classification Act of 1962 classified separately velvet and velveteen yet the "Tariff Classification Study—Explanatory and Background Materials, Schedule 3 (November 1960)" does not indicate the legislative intent for such classification. It merely reiterates by implication that velvet and velveteen are classified as pile fabrics. The indepth analysis of the earlier tariff summaries has not been controverted and remains as a viable indicator of legislative intent.

legal authority, it is this court's determination that the construction test determines the classification of velvet and velveteen.

In any event, plaintiff has wholly failed to sustain its burden of proving that the Government's classification is in error and that its own claimed classification is correct. See: *Hawaiian Motor Company* v. *United States*, 82 Cust. Ct. 70, C.D. 4790, 473 F. Supp. 787 (1979), *aff'd*, 67 CCPA ——, C.A.D. 1241, 617 F. 2d 286 (1980); *Schott Optical Glass, Inc.* v. *United States*, 82 Cust. Ct. 11, C.D. 4783, 468 F. Supp. 1318, *aff'd*, 67 CCPA——, C.A.D. 1239, 612 F. 2d 1283 (1979); *Edge Import Corp.* v. *United States*, 83 Cust. Ct. 140, 484 F. Supp. 906 (1979).

There remains only the issue raised by plaintiff that the requirements for the classification of velvet and velveteen are dual in that the fabric must have a certain weave construction and have certain physical properties giving an outward appearance of velvet and velveteen, and are therefore classifiable as other cotton fabrics. The court concludes this contention to be meritless in view of the evidence, legislative history, and legal authority previously discussed. Also, in regard to said contention plaintiff has wholly failed to sustain its burden of proving the Customs classification is in error and its own claimed classification is correct. Id.

Accordingly the classification of the district director of customs at the port of Los Angeles is sustained and the complaint of plaintiff is, in all respects, dismissed.

Judgment will enter accordingly.

(Slip Op. 70-4)

ROYAL LONDON LTD., DIV. GLOBE NOVELTY HOUSE, PLAINTIFF, *v.* UNITED STATES, DEFENDANT

Memorandum Opinion and Order

Court No. 77-2-00229

(Dated November 20, 1980)

LANDIS, Judge: Plaintiff moves for judgment on the pleadings pursuant to rule 4.9.[1] Defendant cross-moves for summary judgment pursuant to rules 4.12 and 8.2. Plaintiff further moves to exclude and strike certain portions of defendant's pleadings and for further time

[1] The previous rules of the U.S. Customs Court (1970), as amended, are referred to herein in accordance with rule 1(b) of the present rules (1980) of the U.S. Court of International Trade.

to respond pursuant to rule 4.9. These motions are consolidated f purposes of disposition herein.

The parties now agree that Customs classification of the artic in issue under TSUS item 204.40 is erroneous. Defendant states th it intends to abandon its reliance upon the liquidated classificatio Plaintiff argues that it is relying upon the admissions manifest the answer and the presumption of correctness of each part of t liquidated classification to sustain its motion for judgment on t pleadings and urges that defendant should formally amend its answ to clearly state the abandonment of that classification. Defenda insists that the abandonment is technical in nature and that the servic of an amended complaint with the concomitant result of necessitat ing the denial or continuance of the summary judgment motio would delay the proceedings.

Plaintiff's position that it is patently unfair to expect it to respon to such an omnibus motion is sound. The objective of filing an amended pleading is not simply to apprise the court and the pleader's adversary as to a change in position, but also to present in a clear, comprehensive and unified manner the most current form of the pleader's allegations without the necessity of referring back to the original or prior pleadings submitted in the action, which could cause confusion. *Webcor Electronics, Div. of U.S. Industries, Inc.* v. *United States*, 79 Cust. Ct. 177, C.R.D. 77–12 (1977).

In this action, defendant should be required to serve an amended answer which, pursuant to rule 8(c), clearly states its position within the four corners of the document. Defendant makes no showing of prejudice resulting from following the standard procedural perspective. Appositely, plaintiff is confronted with a situation where its motion addressed to the pleadings may be moot and that summary judgment on the heretofore unexplored alternative claim may be granted against it.

Accordingly, it is ORDERED that:

1. Defendant's cross-motion is granted only to the extent that it serve and file an amended answer within 30 days of date of this decision. In all other respects the cross-motion is denied without prejudice to renewal upon completion of service and filing of the amended answer.

2. Plaintiff's motion for judgment on the pleadings is denied without prejudice to renewal upon service and filing of the amended answer.

3. Plaintiff's motion to exclude and strike portions of defendant's pleadings and for further time to respond is denied as moot.

(Slip Op. 80–5)

ASAHI CHEMICAL INDUSTRY COMPANY, LTD., ET AL., PLAINTIFFS, *v.* UNITED STATES, DEFENDANT, AMERICAN YARN SPINNERS ASSOCIATION, INTERVENORS

Memorandum Opinion and Order

Court Nos. 80–5–00755–S and 80–5–00755

(Dated November 20, 1980)

RAO, Judge: This is a civil action by three Japanese companies, Ashai Chemical Industry Co., Ltd., Japan Exlan Co., Ltd. and Mitsubishi Rayon Co., Ltd., seeking judicial review of the determination of the U.S. International Trade Commission (hereinafter Commission) that an industry in the United States is being materially injured because of imports of spun acrylic yarns from Japan, sold at less than fair value, by reason of which they were named in an antidumping duty order of April 9, 1980. On August 13, 1980, the American Yarn Spinners Association (hereinafter AYSA) filed a motion for leave to intervene as a party-defendant, which motion was granted on September 22, 1980.

On that day, defendant United States filed a motion for a protective order for part of the administrative record filed with this court, to wit: documents Nos. 1, 2, and 3 in list No. 3, privileged documents transmitted to the U.S. Customs Court. Document No. 1 is an undated, four-page pros and cons statement prepared by the Commission's staff setting forth suggested criteria to be used, as well as possible reasons for and against an affirmative injury determination. Document No. 2 is an undated, four-page draft opinion entitled "Draft Affirmative * * *" prepared by the Commission's staff for the consideration of and use by the Commissioners in arriving at their statement of reasons in the investigation involved herein. Document No. 3 is an undated, three-page draft opinion entitled "Draft Negative * * *" similar to Document No. 2, but arriving at different conclusions. Attached to the motion of the United States is the affidavit and claim of privilege of Bill Alberger, Chairman of the Commission, stating that he had personally reviewed the documents and that they are internal communications prepared solely for the use of the Commissioners and staff members containing advisory opinions, conclusions, considerations, deliberations and recommendations.

On October 3, 1980, plaintiffs Japan Exlan Co., Ltd. and Mitsubishi Rayon Co., Ltd., filed a memorandum in opposition to the motion for a protective order, the basis of which is that since none of the

parties have attempted to gain access to the documents, the motion is premature. On the same day, plaintiff Asahi Chemical Industry Co., Ltd., moved for limited discovery which would allow its attorneys to examine the information contained in the documents for purposes of this litigation, but forbidding further disclosure to any other persons.

On October 23, 1980, intervenor AYSA filed a memorandum in opposition to plaintiff Asahi's motion for limited discovery on the grounds that the documents in question are not properly part of the record for judicial review of an antidumping determination and, alternatively, that they are privileged and irrelevant.

Taking first plaintiffs Japan Exlan Co., Ltd.'s and Mitsubishi Rayon Co., Ltd.'s opposition to the motion for a protective order, I am constrained by rule 6.1(c)(4) of this court to hold that defendant's motion is not premature.[1] The plain language of the rule is to the effect that any party may move for a protective order and that the court may make any order which justice requires without any limitation as to when a protective order may be granted. Additionally, *Henkel Corporation et al.* v. *United States*, 85 Cust. Ct. ——, C.R.D. 80–15, (1980), involved a defendant's motion for a protective order prior to plaintiffs' request for production. Judge Ford granted the protective order despite the fact that no demand had been made for the "pros and cons" statement sought to be held privileged.

In *SCM Corporation* v. *United States* (*Brother International Corporation, Party-in-Interest*), 82 Cust. Ct. 351, C.R.D. 79–11, 473 F. Supp. 791 (1979), this court was asked for a protective order for nine documents, including a pros and cons statement; a four-page draft opinion entitled "Statement of Reasons for Negative Determination * * *"; and a four-page draft opinion entitled "Statement of Reasons for Negative Determination * * *," among others. If the claim of privilege in the instant case is properly invoked, *SCM Corporation* must be considered precedent and the protective order granted, since the documents involved herein are similar to those the subject of the protective order granted in *SCM Corporation*.

To be properly invoked, the claim of executive privilege must be

---

[1] Rule 6.1(c) protective orders: Upon motion by any party or by the person from whom discovery is sought, and for good cause shown, the court may make any order which justice requires to protect a party or person from annoyance, embarrassment, oppression, or undue burder on expense, including, but not limited to, one or more of the following:

(1) that the discovery not be had;

(2) that the discovery may be had only on specified terms and conditions, including a designation of time or place;

(3) that the discovery may be had only by a method of discovery other than that selected by the party seeking discovery;

(4) that certain matters not be inquired into, or that the scope of the discovery be limited to certain matters;

* * * * * * *

formally claimed, must be asserted by the head of the agency who personally considered the matter, the materials must be reviewed, and an appropriate affidavit must be submitted in support of the claim. See *SCM Corporation* v. *United States*, *supra*, and *Sprague Electric Company* v. *United States* (*Capar Components Corp.*, *Party-in-Interest*), 81 Cust. Ct. 168, 462 F. Supp. 966 (1978). It has been judicially determined that the Chairman of the International Trade Commission is authorized to examine documents with the expertise to invoke a proper claim of privilege. *Sprague Electric Company*, *supra*. An appropriate affidavit by the Chairman was submitted in support of the claim for privilege, in which he swears that he personally considered the matter and reviewed the materials. No objection to the form or content of the affidavit has been made by any of the parties opposing the grant of a protective order. Additionally, examination by the court of documents 1, 2, and 3 of list 3 in camera leads me to conclude that the averments of the affidavit are factual, and that the documents comprise part of the process by which the Commission's decision was formulated.

For the above reasons, it is,

ORDERED that documents 1, 2, and 3 on list No. 3, part of the administrative record previously transmitted to the Court, are hereby recognized as privileged documents, not subject to discovery or disclosure.

(Slip Op. 80–6)

ROYAL BUSINESS MACHINES, INC., PLAINTIFF, *v.* UNITED STATES, PHILIP M. KLUTZNICK, SECRETARY OF COMMERCE; ROBERT E. HERZSTEIN, UNDER SECRETARY OF COMMERCE FOR INTERNATIONAL TRADE, DEPARTMENT OF COMMERCE; ROBERT E. CHASEN, COMMISSIONER OF CUSTOMS AND, JOHN E. BRADY, DISTRICT DIRECTOR OF CUSTOMS, LOS ANGELES, CALIF., DEFENDANTS

Memorandum to Accompany Order Granting Plaintiff's Application for Temporary Restraining Order

Court No. 80–11–00056

[Plaintiff's application for temporary restraining order granted.]

(Dated November 20, 1980)

Rode & Qualey, Esqs. (*Michael S. O'Rourke* and *Patrick D. Gill*, Esqs., of counsel) for the plaintiff.

Alice Daniel, Assistant Attorney General, *David M. Cohen*, Director, Commercial Litigation Branch, and *Velta A. Melnbrencis*, Assistant Branch Director, Esqs., for the defendants.

NEWMAN, Judge: Plaintiff has applied for a temporary restraining order (TRO) and injunctive relief pursuant to Rule 65 of the Court, and for a writ of mandamus.[1] This memorandum is addressed solely to plaintiff's application for a TRO, which for the reasons indicated herein is granted.

Plaintiff seeks the TRO in the instant action directing the defendants to abstain from modifying, or in any way altering, the antidumping duty order issued by the Department of Commerce (Commerce) and published in the Federal Register on May 9, 1980 (45 F.R. 30618–19); and also directing the defendants to suspend or withhold liquidation of all customs entries covering the Royal Administrator, a typewriter manufactured in Japan by Silver-Seiko, Ltd., and imported by plaintiff.

Briefly, the factual basis of the present dispute, as disclosed by the verified complaint and an affidavit of plaintiff's counsel, which for present purposes we will accept in their most favorable light, follows: On May 9, 1980, an antidumping duty order issued by Commerce was published in the Federal Register (45 F.R. 30618–19) The order announced that Commerce had determined that portable electric typewriters from Japan were being sold at less than fair value and that such sales were materially injuring an industry in the United States within the meaning of the antidumping law; and further described the class or kind of merchandise covered by the antidumping duty order as portable electric typewriters as provided for in item 676.0510, Tariff Schedules of the United States Annotated. Subsequently, on August 7, 1980, the U.S. Customs Service issued a ruling holding that plaintiff's Royal Administrator is not classifiable under item 676.0510, but rather is properly classifiable under item 676.0540, TSUSA, and hence the Royal Administrator is not within the scope of Commerce's antidumping duty order.

Plaintiff further avers, on information and belief, specifically as a result of several conferences with named officials of Commerce, that Commerce intends to modify or alter the antidumping duty order published on May 9, 1980, so as to include the Royal Administrator. Plaintiff fears that nay such modification or alteration of the antidumping duty order published on May 9, 1980, would result in irreparable harm in that plaintiff will be deprived of its right of judicia' review under section 516A (19 U.S.C. 1516a).

Rule 65(b) of this court provides that a TRO may be granted where it clearly appears that immediate and irreparable injury, loss, or damage will result to the applicant before the adverse party or his attorney can be heard in opposition. Plainly, irreparable harm will occur to plaintiff if the antidumping duty order of May 9, 1980, is

[1] Filed at 1 p.m. of Nov. 18, 1980, and oral argument commenced in chambers at 3:30 p.m. of that day.

modified or altered to include plaintiff's Royal Administrator typewriter; if Commerce's action is not subject to judicial review; and if plaintiff will be deprived of its right to contest antidumping duty assessments when the liquidition of entries currently held by Customs are liquidated. *Cf. Industrial Fasteners Group, American Importers Association* v. *United States, et al.*, 85 Cust. Ct. ——, C.R.D. 80–8, 495 F. Supp. 911 (1980).

During the conference, oral argument was held, and counsel for defendants did not dispute plaintiff's contention that a modification of the antidumping duty order would deprive plaintiff of its right of judicial review under section 516A. However, defendants' counsel vigorously opposed the granting of a TRO. The main thrust of Ms. Melnbrencis' argument was that she had received assurances from Commerce that no modification of the May 9, 1980 antidumping duty order would be pulbished until the parties have had an opportunity to brief the matter, and the court has had an opportunity to hear whatever oral argument there is (Tr. oral arg. 13). In essence, defendant's position is that since Commerce is willing to voluntarily withhold any action with regard to any modification or alteration of the final antidumping duty order which was published by Commerce in the Federal Register on May 9, 1980, until the court has considered the issues, a TRO would be unnecessary and improper.

I am unable to agree with defendant's argument. Commerce's present intention to voluntarily withhold publication of any order modifying or altering the antidumping duty order published on May 9, 1980, assuredly cannot accord plaintiff the protection intended to be conferred by the issuance of a TRO under rule 65(b). Indeed, while I have no quarrel with counsel for defendants personal representation that she has been assured by Commerce (viz, David Amerine, Esq., Office of General Counsel) that Commerce will voluntarily refrain from publishing any modification of the final antidumping duty order, the blunt fact is that the Government official involved may revise his view, or be superseded in some fashion, or leave Government employ, or any of several other potential contingencies that can develop. Accordingly, under all the facts and circumstances, plaintiff's application for a TRO is granted, which TRO will preserve the status quo. Inasmuch as Commerce does not presently intend to modify its antidumping order of May 9, 1980, no security shall be required at this time.

At the conference of November 18, 1980, the court allowed defendants' request to file opposing papers by November 25, 1980, respecting the TRO or on any other subject, and to file an opposing memorandum concerning plaintiff's application for temporary in-

junction and writ of mandamus by December 10, 1980. Plaintiff was granted 10 days in which to reply to defendant's memorandum.

ROYAL BUSINESS MACHINES, INC., PLAINTIFF, *v.* UNITED STATES, ET AL., DEFENDANTS

Temporary Restraining Order

Court No. 80-11-00056

(Dated November 20, 1980)

NEWMAN, Judge. Upon reading and filing plaintiff's application for temporary restraining order, the affidavit of counsel in support of issuance of the temporary restraining order, the summons, verified compliant, motion for preliminary injunction and writ of mandamus, and memorandum in support thereof, and upon all other papers and proceedings had herein, including the hearing on November 18, 1980, attended by counsel for the named parties, it clearly appearing:

(1) That immediate and irreparable injury, loss, or damage will result to the applicant before all possible interested parties or their attorney(s) can be heard in opposition to this Application; and

(2) That the injury suffered by plaintiff as the result of a modification or alteration by the Department of Commerce of its antidumping duty order dated May 9, 1980 (45 F.R. 30618–19), will be irreparable because such modification or alteration, if it is allowed to occur, will deprive plaintiff of any effective judicial review of the Department of Commerce's action; and

(3) That further injury will be suffered by the assessment of antidumping duties in accordance with the final antidumping duty order, supra, by the U.S. Customs Service in the act of liquidation of affected entries, and that such action may not be susceptible to the administrative protest and would be irrecoverable even if the determination by the International Trade Administration, Department of Commerce is held to be invalid by this Court; and

(4) That plaintiff will have no means of contesting the legitimacy of the modification or alteration of the antidumping duty order and, subsequently, will lack the ability to contest the legitimacy of antidumping duty assessments when the liquidation of the entries currently held by the U.S. Customs Service are liquidated; and

(5) That restraint of such modification or alteration of the antidumping duty order will preserve the status quo until there is an opportunity to hold a hearing on the application for a preliminary injunction and writ of mandamus and currently filed, and that such restraint will cause no harm to adverse parties, it is hereby

ORDERED that the defendants herein, together with their delegates and all other officers, agents, servants, and employees of the U.S. Department of Commerce shall be and they are restrained from the modification or alteration of the final antidumping duty order issued by the Department of Commerce and published in the Federal Register on May 9, 1980 (45 F.R. 30618–19), and it is

FURTHER ORDERED that the defendants herein together with their delegates and all other officers, agents, servants, and employees of the U.S. Customs Service shall be and they are restrained from the liquidation of any and all entries or withdrawals from warehouse for consumption of the Royal Administrator typewriter manufactured in Japan, and it is

FURTHER ORDERED that defendant may file opposing papers by November 25, 1980, respecting this order or on any other subject and file an opposing memorandum concerning plaintiff's application for a temporary injunction and writ of mandamus by December 10, 1980. Plaintiff may reply to defendants' memorandum within 10 days of its service.

FURTHER ORDERED that plaintiff's motion for preliminary injuction is set down for hearing before this court on December 30, 1980, at 10:30 a.m., and it is

FURTHER ORDERED that this order shall expire 10 days from the date of entry of the same unless extended for good cause shown.

Decisions of the United States Court of International Trade

Abstracts

Abstracted Protest Decision

DEPARTMENT OF THE TREASURY, *November 24, 1980.*

The following abstracts of decisions of the United States Court of International Trade at New York are published for the information and guidance of officers of the customs and others concerned. Although the decisions are not of sufficient general interest to print in full, the summary herein given will be of assistance to customs officials in easily locating cases and tracing important facts.

ROBERT E. CHASEN,
Commissioner of Customs.

DECISION NUMBER	JUDGE & DATE OF DECISION	PLAINTIFF	COURT NO.	ASSESSED	HELD	BASIS	PORT OF ENTRY AND MERCHANDISE
				Par. or Item No. and Rate	Par. or Item No. and Rate		
P80/182	Newman, J. November 21, 1980 (amends decision and judgment of 10/15/80 [Abs. P80/157])	Keystone d/o Berkey Photo, Inc., et al.	72-8-01859, et.	Item 722.34 10%	Item 722.75 4.5% or other applicable rate of duty, depending upon year of entry	Amended decision and judgment on agreed statement of facts	New York Photographic light meters and photographic meter assemblies

Recent Unpublished Customs Service Decisions

The following listing of recent administrative decisions issued by the Office of Regulations and Rulings, U.S. Customs Service, and not otherwise published, is published for the information of Customs officers and the importing community. Although the decisions are not of sufficient general interest to warrant publication as Treasury decisions, the listing describes the issues involved and is intended to aid Customs officers and concerned members of the public in identifying matters of interest which recently have been considered by the Office of Regulations and Rulings.

A copy of any decision included in this listing, identified by its date and file number, may be obtained in a form appropriate for public distribution upon written request to the Office of Regulations and Rulings, attention: Legal Reference Area, room 2404, U.S. Customs Service, 1301 Constitution Avenue NW., Washington, D.C. 20229. These copies will be made available at a cost to the requester of 10 cents per page. However, the Customs Service will waive this charge if the total number of pages copied is 10 or less.

Decisions listed in earlier issues of the CUSTOMS BULLETIN, through July 2, 1980, are available in microfiche format at a cost of $23.85 ($.15 per sheet of fiche). It is anticipated that additions to the microfiche will be made quarterly and subscriptions are available. Requests for the microfiche now available and for subscriptions should be directed to the Legal Reference Area. Subscribers will automatically receive updates as they are issued and will be billed accordingly.

Dated: November 25, 1980.

MARVIN M. AMERNICK,
Acting Director,
Regulations and Information Division.

Date of decision	File No.	Issue
11- 4-80	104407	Vessel repair: Whether relief from duty on the cost of repairs to Lash barges warrants remission when statements contain only general information concerning the repairs
11- 5-80	104923	Vessels: Whether a proposed cruise itinerary for stops at Canadian ports and Alaskan ports would be in violation of coastwise transportation of passengers on a foreign vessel
11-31-80	104924	Containers: Whether repositioning cargo containers between U.S. ports on foreign-flag vessels is in violation of coastwise transportation of merchandise in other than coastwise-qualified vessels
11-13-80	542197	Valuation: Which of two price lists should be used as the basis of foreign value of chucks for machine tools
11-31-80	713339	Entry: Whether the Immediate Delivery Procedure in lieu of the new expedited entry procedure may be extended for the entry of merchandise
11-12-80	714319	Country-of-origin marking: Wire mesh cable grip subassemblies
10-30-80	055739	Generalized system of preferences: Explanation of the term product of a beneficiary developing country (BDC)
6-23-80	061781	Classification: Decorative fabrics (807.00)
9-18-80	062786	Classification: Bicycle headlamp (683.70)
10-10-80	064228	Classification: Forging die blocks and molds (649.49, 680.12, 680.13)
10-17-80	064359	Classification: Access flooring components consisting of modular panels, understructures, and rolls of steel (657.25, 207.00, 389.50, 607.83)
10-10-80	064528	Classification: Sample bra (376.24)
10-30-80	064837	Classification: Rifled tubing (660.10, 660.15, 610.32, 610.37, 610.49, 610.52, 606.00, 606.02)
10- 9-80	065180	Classification: Whether miniature trucks and cars are classified as models or toys (737.15)
10- 6-80	065238	Classification: American selling price; ladies yarn slippers (700.60)
10-24-80	065287	Classification: Metal containers (657.25)
10- 9-80	065363	Classification: Stepper motor with lead screw (682.25)
10-17-80	065368	Classification: Aqua action game (735.20)
10-30-80	065371	Classification: Computone paper (252.75)
10- 6-80	065376	Classification: Modular panels or screens in chief value of plastic or steel (774.60, 657.25)
10-30-80	065402	Classification: Fur apres-ski boots (700.60)
10-30-80	066051	Classification: Jackets, designed for and worn by cyclists (382.58)
10-23-80	066166	Classification: Manmade fiber yarn (310.60)
9- 7-80	066185	Classification: Bar code-checker, bar code verifier, office machines (676.30, 688.45)

Date of decision	File No.	Issue
10-30-80	066291	Classification: Fruit preserves (146.82, 146.85, 153.04)
9-18-80	066451	Classification: Whether certain labels attached to garments constitute ornamentation
10-10-80	066487	Classification: Well screens, stainless steel (657.25)
10- 8-80	066492	Classification: Barrier impenious stockinet (389.70, 386.50, 389.62)
10-30-80	066497	Classification: Spaghetti ruler, pasta tester (772.15)
11- 6-80	066508	Classification: Boot cover for a roller skate (389.40)
10-17-80	066532	Valuation: American selling price; women's casual shoes (700.60)
11- 6-80	066544	Classification: Burglar alarm used in vehicles (685.90)
10-10-80	066568	American selling price: Women's footwear (700.60)
11-13-80	066784	Classification: Whether certain types of labels attached to karate uniforms in a visible location would constitute ornamentation

International Trade Commission Notices

Investigations by the U.S. International Trade Commission

DEPARTMENT OF THE TREASURY, *December 4, 1980*

The appended notices relating to investigations by the U.S. International Trade Commission are published for the information of Customs Officers and others concerned.

R. E. CHASEN,
Commissioner of Customs.

In the Matter of CERTAIN MASS FLOW DEVICES AND COMPONENTS THEREOF	Investigation No. 337-TA-91

Notice of Investigation

Notice is hereby given that a complaint was filed with the U.S. International Trade Commission on October 14, 1980, and amended on October 31, 1980, November 5, 1980, and November 12, 1980, under section 337 of the Tariff Act of 1930 (19 U.S.C. 1337), on behalf of Tylan Corp., 19220 South Normandie Avenue, Torrance, Calif. 90220, alleging that unfair methods of competition and unfair acts exist in the importation into the United States of certain mass flow devices and components thereof, or in their sale, by reason of: (1) Infringement by such mass flow devices of claims 1–5 and 7–10 of U.S. Letters Patent 3,650,505, claims 1–10 of U.S. Letters Patent 3,851,526, and claims 1–5 of U.S. Letters Patent 3,938,384; (2) misappropriation of trade secrets; (3) misappropriation of trade dress; (4) misappropriation of trade nomenclature; and (5) passing off. The amended complaint (hereinafter referred to as the complaint) alleges that the effect or tendency of the unfair methods of competiton and unfair acts is to substantially injure an industry, efficiently and economically operated, in the United States.

Complainant requests permanent exclusion from entry into the United States of the imports in question after a full investigation, or, alternatively, that a cease and desist order be issued.

Having considered the complaint, the Commission, on November 13, 1980, Ordered That—

(1) Pursuant to subsection (b) of section 337 of the Tariff Act of 1930 (19 U.S.C. 1337), an investigation be instituted to determine whether there is a violation of subsection (a) of this section in the unlawful importation of certain mass flow devices, components thereof, and products incorporating said devices into the United States, or in their sale, by reason of the alleged—

(a) infringement by such mass flow devices of—
(i) claims 1–5 and 7–10 of U.S. Letters Patent 3,650,505,
(ii) claims 1–10 of U.S. Letters Patent 3,851,526, and
(iii) claims 1–5 of U.S. Letters Patent 3,938,384, and

(b) unfair conduct comprising any one or a combination of—
(i) misappropriation of trade secrets,
(ii) misappropriation of trade dress and/or trade nomenclature, and
(iii) passing off,

the effect or tendency of which is to substantially injure an industry, efficiently and economically operated, in the United States;

(2) For the purpose of this investigation so instituted, the following are hereby named as parties upon which this notice of investigation shall be served:

(a) The complainant is—
Tylan Corp.
19220 South Normandie Avenue
Torrance Calif. 90220

(b) The respondents are the following companies alleged to be involved in the unlawful importation of such mass flow devices, components thereof, and products incorporating said devices into the United States, or in their sale, and are the parties upon which the complaint shall be served:

Advanced Semiconductor Materials, B.V.
Soestdijkseweg 328
Bilthoven
The Netherlands

Advanced Semiconductor Materials America, Inc.
4302 East Broadway Road
Phoenix, Ariz. 85040

(c) Talbot S. Lindstrom, Chief, Unfair Import Investigations Division, U.S. International Trade Commission, 701 E Street

NW., Washington, D.C. 20436, shall name the Commission investigative attorney, a party to this investigation; and

(3) For the investigation so instituted, Chief Administrative Law Judge Donald K. Duvall, U.S. International Trade Commission, 701 E Street NW., Washington, D.C. 20436, shall designate the presiding officer.

The phrase "and products incorporating said devices" has been added to paragraphs (1) and (2)(b) above on the basis of informal investigatory activities by the Commission which revealed that mass flow devices of the type alleged to be involved in the aforesaid unfair acts can be imported as mass flow devices, components thereof, and products incorporating said devices.

Responses must be submitted by the named respondents in accordance with section 210.21 of the Commission's Rules of Practice and Procedure (19 CFR 210.21). Pursuant to sections 201.16(d) and 210.21(a) of the rules, such responses will be considered by the Commission if received not later than 20 days after the date of service of the complaint. Extensions of the time for submitting a response will not be granted unless good and sufficient cause therefor is shown.

Failure of a respondent to file a timely response to each allegation in the complaint and in this notice may be deemed to constitute a waiver of the right to appear and contest the allegations of the complaint and this notice, and to authorize the presiding officer and the Commission, without further notice to such respondent, to find the facts to be as alleged in the complaint and this notice and to enter both a recommended determination and a final determination containing such findings.

The complaint, except for the confidential information contained therein, is available for inspection by interested persons at the Office of the Secretary, U.S. International Trade Commission, 701 E Street NW., Washington, D.C. 20436.

By order of the Commission.

Issued: November 21, 1980.

KENNETH R. MASON,
Secretary.

In the Matter of CERTAIN AIRLESS PAINT SPRAY PUMPS AND COMPONENTS THEREOF	Investigation No. 337-TA-90

Order

Pursuant to my authority as Chief Administrative Law Judge of this Commission, I hereby designate Administrative Law Judge Donald K. Duvall as Presiding Officer in this investigation.

The Secretary shall serve a copy of this order upon all parties of record and shall publish it in the Federal Register.

Issued: November 25, 1980.

DONALD K. DUVALL,
Chief Administrative Law Judge.

(19 CFR Part 201)

Rules of General Application

AGENCY: U.S. International Trade Commission.

ACTION: Final rule.

SUMMARY: These amendments to Part 201 (19 CFR 201) of the Commission's Rules of Practice and Procedure are intended to correct information contained in rules 201.2, 201.3, 201.4, 201.10, and 201.12 and to clarify statutory citations contained in rules 201.2 and 201.4.

EFFECTIVE DATE: Effective immediately.

FURTHER INFORMATION CONTACT: Warren H. Maruyama, Esq., Office of the General Counsel, U.S. International Trade Commission, 701 E Street NW., Washington, D.C. 20436, telephone 202-523-0143.

SUPPLEMENTARY INFORMATION: These rules amend part 201 of the Commission's Rules of Practice and Procedure. The changes that have been made are minor and do not affect the substance of the rules involved.

Since the Commission's rules were last revised, Congress has enacted significant new legislation concerning international trade. The Commission's rules have been amended here to conform with various statutory changes.

In the Trade Act of 1974 (88 Stat. 1978). Congress changed the Commission's name from the U.S. Tariff Commission to the U.S. International Trade Commission. The outdated references in section 201.3 to the Tariff Commission have been amended to reflect the Commission's change of name.

In the Trade Agreements Act of 1979, Congress enacted a new statutory scheme for dumping and countervailing duty investigations. The Antidumping Act, 1921, was repealed (93 Stat. 193) and replaced by a new antidumping provision (93 Stat. 162) to be codified at 19 U.S.C. 1673. Congress also enacted a new countervailing duty provision (93 Stat. 151) applicable to countries which have signed the Subsidies Code and a limited class of other countries entitled to special treatment because of agreements with the United States. The new countervailing duty provision is to be codified at 19 U.S.C.

1671. Congress retained the previous countervailing duty provision (19 U.S.C. 1303), but limited its application to countries which have not signed the Subsidies Code and are not entitled to special treatment. Statutory references in sections 201.2 and 201.4 have been changed to reflect the new scheme.

In addition, the Commission has closed the Commission's New York field office located in suite 629, 6 World Trade Center, New York, N.Y. 10048. Sections 201.3 and 201.10 refer to a Commission field office in New York City. These references have now become inaccurate, and might mislead and inconvenience members of the public. The Commission has, therefore, amended the rules by deleting any mention of a New York office.

Citations contained in certain rules have also been changed. The amendments are summarized below.

Explanation of Amended Rules

Section 201.2

The definition of the "Tariff Act" has been changed to, " 'Tariff Act' means the Tariff Act of 1930, 19 U.S.C. 1202–1677." The definition of the "Trade Expansion Act" formerly contained in subsection (c) has been changed to " 'Trade Expansion Act' means the Trade Expansion Act of 1962, 19 U.S.C. 1801–1991."

The definition of the "Antidumping Act" previously contained in former subsection (d) has been deleted, and former subsection (e) has been renumbered subsection (d). In addition, the definition of the "Trade Act" formerly contained in subsection (e) and now contained in subsection (d) has been changed to: " 'Trade Act' means the Trade Act of 1974, 19 U.S.C. 2101–2487." Former subsections (f), (g), and (h) have been renumbered (e), (f), and (g), respectively.

Section 201.3

The references to the "Tariff Commission" in subsections (a) and (b) have been changed to the "International Trade Commission." The reference to the New York branch office has been deleted from subsection (a), and the Secretary's address has been added to subsection (b).

Section 201.4(d)

The previous citation to "Public Law 93–618" has been changed to "19 U.S.C. 2251" to reflect the codification of the Trade Act of 1974 in the United States Code. The references to the Antidumping Act, 1921 and to sections 303 or 337 of the Tariff Act of 1930 have been removed, and in lieu thereof, a new reference to the antidumping provisions (19 U.S.C. 1673) or the countervailing duties provisions (19

U.S.C. 1303, 19 U.S.C. 1671 et seq.) of the Tariff Act of 1930 has been inserted.

Section 201.10

The reference to the Commission's previous practice of posting formal notice of Commission actions in its New York field office has been deleted in view of the closing of that office.

Section 201.12(b)

The word transcript has been changed to record in order to more accurately reflect Commission practice.

The amended rules are set forth below:

Part 201 of the Commission's Rules of Practice and Procedure (19 CFR 201) is amended in sections 201.2, 201.3, 201.4, 201.10, and 201.12 to read as follows:

Section 201.2 Definitions.

As used in this chapter—

(a) Commission means the United States International Trade Commission;

(b) Tariff Act means the Tariff Act of 1930, 19 U.S.C. 1202–1677;

(c) Trade Expansion Act means the Trade Expansion Act of 1962, 19 U.S.C. 1801–1991;

(d) Trade Act means the Trade Act of 1974, 19 U.S.C. 2101–2487;

(e) Trade Agreements Act means the Trade Agreements Act of 1979, Public Law No. 96–39, 93 Stat. 144;

(f) Rule means a section of the Commission Rules of Practice and Procedure (19 CFR chapter II);

(g) Secretary means the Secretary of the Commission.

Section 201.3 Commission offices, mailing address, and hours.

(a) *Offices.*—The Commission's offices are located in the United States International Trade Commission Building on E Street between 7th and 8th Streets NW., Washington, D.C.

(b) *Mailing Address.*—All communications to the Commission should be addressed to the "Secretary, U.S. International Trade Commission, 701 E Street NW., Washington, D.C. 20436."

(c) *Hours.*—The hours of the Commission are from 8:45 a.m. to 5:15 p.m., eastern standard or daylight saving time, whichever is in effect, in Washington, D.C.

Section 201.4(d) Presentation of matter that may come within the preview of other laws.

Whenever any party of person, including the Commission staff, has reason to believe that (1) a matter under investigation pursuant to

section 337 of the Tariff Act of 1930, or (2) a matter under an investigation pursuant to section 201 of the Trade Act of 1974 (19 U.S.C. 2251), which is causing increased imports may come within the purview of another remedial provision of law not the basis of such investigation, including but not limited to the antidumping provisions (19 U.S.C. 1673) or the countervailing duty provisions (19 U.S.C. 1303, 19 U.S.C. 1671 et seq.) of the Tariff Act of 1930, then the party or persons may file a suggestion of notification with the Commission that the appropriate agency be notified of such matter or circumstances, together with such information as the party or person has available. The Commission Secretary shall promptly thereafter publish notice of the filing of such suggestion and information, and make them available for inspection and copying to the extent permitted by law. Any person may comment on the suggestion within 10 days after the publication of said notice. Thereafter, the Commission shall determine whether notification is appropriate under the law and, if so, shall notify the appropriate agency of such matters or circumstances. The Commission may at any time make such notification in the absence of a suggestion under this rule when the Commission has reason to believe, on the basis of information before it, that notification is appropriate under law.

Section 201.10 Public notices.

Formal notice of the receipt of documents properly filed, of the institution of investigations, of public hearings, and, as required or appropriate, of other formal actions of the Commission, will be given by publication in the Federal Register. In addition to such formal notice, a copy of each notice will be posted at the Office of the Secretary of the Commission in Washington, D.C., and copies will be sent to press associations, to trade and similar organizations of producers and importers, and to others known to the Commission to have an interest in the subject matter. An announcement regarding the notice will be furnished to the Treasury Department for publication in Treasury decisions and to the Department of Commerce for publication in International Commerce.

Section 201.12(d) Order of the Testimony.

Unless otherwise ordered by the presiding officials, witnesses will give testimony in the order designated by the Secretary of the Commission. Each witness, after being duly sworn, will be permitted to proceed with his or her testimony without interruption except by presiding officials. The Commission may permit witnesses to sum-

marize any prepared statements orally. Prepared statements, however, will be made a part of the record.

By order of the Commission.

Issued: November 25, 1980.

KENNETH R. MASON,
Secretary.

(731–TA–37 (Preliminary))

CERTAIN IRON-METAL CASTINGS FROM INDIA

Notice of Institution of Preliminary Antidumping Investigation and Scheduling of Conference

AGENCY: U.S. International Trade Commission.

ACTION: Institution of preliminary antidumping investigation to determine whether there is a reasonable indication that an industry in the United States is materially injured, or is threatened with material injury, or the establishment of an industry is materially retarded, by reason of imports from India of certain iron-metal castings, provided for in item 657.09 of the Tariff Schedules of the United States (TSUS), allegedly sold or likely to be sold at less than fair value (LTFV).

EFFECTIVE DATE: November 19, 1980.

FOR FURTHER INFORMATION CONTACT: Patrick J. Magrath, Office of Investigations, 202–523–0283.

SUPPLEMENTARY INFORMATION:

BACKGROUND

This investigation is being instituted following receipt of a petition on November 19, 1980, filed by Pinkerton Foundry, Inc., Lodi, Calif., on behalf of domestic producers of certain iron-metal castings. The petition requested the imposition of additional duties in an amount equal to the amount by which the foreign cost of production exceeds the U.S. price of certain iron-metal castings imported from India.

AUTHORITY

Section 733(a) of the Tariff Act of 1930 (19 U.S.C. 1673b(a)) requires the Commission to make a determination of whether there is a reasonable indication that an industry in the United States is materially injured, or is threatned with material injury or the establishment of an industry in the United States is materially retarded, by reason of imports alleged to be, or likely to be, sold in the United States at LTFV. Such a determination must be made within 45 days after the date on which a petition is filed under section 732(b) or on

which notice is received from the Department of Commerce of an investigation commenced under section 732(a). Accordingly, the Commission, on November 26, 1980, instituted preliminary antidumping investigation No. 731-TA-37. This investigation will be subject to the provisions of part 207 of the Commission's rules of practices and procedure (19 CFR 207, 44 F.R. 76457) and particularly, subpart B thereof.

For the purposes of this investigation, the term certain iron-metal castings means manhole covers and frames, catch basin grates and frames, and cleanout covers and frames, provided for in item 657.09 of the Tariff Schedules of the United States.

WRITTEN SUBMISSION

Any person may submit to the Commission on or before December 15, 1980, a written statement of information pertinent to the subject matter of this investigation. A signed original and 19 copies of such statements must be submitted.

Any business information which a submitter desires the Commission to treat as confidential shall be submitted separately and each sheet must be clearly marked at the top Confidential Business Data. Confidential submissions must conform with the requirements of section 201.6 of the Commission's rules of practice and procedure (19 CFR 201.6). All written submissions, except for confidential business data, will be available for public inspection.

CONFERENCE

The Director of Operations of the Commission has scheduled a conference in connection with this investigation for 10 a.m., e.s.t., on Wednesday, December 10, 1980, at the U.S. International Trade Commission Building, 701 E Street NW., Washington, D.C. Parties wishing to participate in the conference should contact the investigator for this investigation, Mr. Patrick J. Magrath; 202-523-0283. It is anticipated that parties in support of the petition for antidumping duties and parties opposed to such petition will each be collectively allocated one hour within which to make an oral presentation at the conference. Further details concerning the conduct of the conference will be provided by the investigator.

INSPECTION OF PETITION

The petition filed in this case is available for public inspection at the Office of the Secretary, U.S. International Trade Commission.

By order of the Commission.

Issued: November 26, 1980.

KENNETH R. MASON,
Secretary.

Index

U.S. Customs Service

Treasury decisions: T.D. No.

Customs regulations amended—relating to issuance of administrative rulings 80-285

Revised fee schedules for vessel services, section 4.98, Customs regulations 80-286

Air commerce—Customs regulations amended 80-287

Foreign currencies:

Daily certified rates; November 17-21, 1980 80-288

Rates which varied from quarterly rate; November 17-21, 1980 80-289

U.S. Court of International Trade

Ambiguity; legislative intent, Slip Op. 80-3

Amended pleading, objective of filing; pleading, amended, Slip Op. 80-4

Antidumping action; temporary restraining order granted, Slip Op. 80-6

Burden of proof; classification cases, Slip Op. 80-3

Classification cases; burden of proof, Slip Op. 80-3

Common and commercial meaning:

Presumed to be the same, Slip Op. 80-3

Tariff terms, construction of, Slip Op. 80-3

Construction:

Philippine Trade Act (33 Stat. 928), Slip Op. 80-3

Presidential Proclamations 2019, 4697, Slip Op. 80-3

Rules of United States Court of International Trade:

Rule 1(b), Slip Op. 80-4

Rule 65, Slip Op. 80-4

Rule 65, Slip Op. 80-6

Rules of United States Customs Court:

Rule 4.9, Slip Op. 80-4

Rule 4.12, Slip Op. 80-4

Rule 6.1(c), Slip Op. 80-5

Rule 8(c), Slip Op. 80-4

Rule 8.2, Slip Op. 80-4

Tariff Act of 1890 (26 Stat. 567), Slip Op. 80-3

Tariff Act of 1894 (28 Stat. 509), Slip Op. 80-3

Tariff Act of 1897 (30 Stat. 151), Slip Op. 80-3

Tariff Act of 1905 (33 Stat. 928), Slip Op. 80-3

Tariff Act of 1909 (36 Stat. 11), Slip Op. 80-3

Tariff Act of 1913 (38 Stat. 114), Slip Op. 80-3

Tariff Schedules of the United States:

General Headnotes and Rules of Interpretation:

Headnote 3(e), Slip Op. 80-3

Headnote 3(f), Slip Op. 80-3

Item 204.40, Slip Op. 80-4

Item 346.15, Slip Op. 80-3

Item 346.35, Slip Op. 80-3
Item 346.45, Slip Op. 80-3
Schedule 3, part 4, subpart A, Slip Op. 80-3
U.S. Code, title 19, sec. 1516(a), Slip Op. 80-6
Cotton pile fabric; velvet, Slip Op. 80-3
Definitions:
Certain characteristic weave, Slip Op. 80-3
Construction, Slip Op. 80-3
Pile, Slip Op. 80-3
Documents, privileged; executive privilege, claim of, Slip Op. 80-5
Evidence of congressional intent; Summaries of Tariff Information, Slip Op. 80-3
Executive privilege, claim of; documents, privileged, Slip Op. 80-5
Fabric, cotton pile, Slip Op. 80-3
Injunctive relief, Slip Op. 80-6
International Trade Commission Chairman; privileged documents, authorized to examine, Slip Op. 80-5
Japan; spun acrylic yarns, Slip Op. 80-5
Judgment on the pleadings, motion denied, Slip Op. 80-4
Legislative:
History:
Summary of Tariff Information; 1920, 1929, 1948, Slip Op. 80-3
Tariff Classification Study, 1960; Explanatory and Background Materials, schedule 3, Slip Op. 80-3
Intent:
Ambiguity, Slip Op. 80-3
Primary source, Slip Op. 80-3
Lexicographic sources:
Fairchild's Dictionary of Textiles, Slip Op. 80-3
Webster's Third New International Dictionary (1966), Slip Op. 80-3
Memorandum opinion and order; summary judgment, cross-motion granted, Slip Op. 80-4
Other cotton pile fabrics, Slip Op. 80-3
Plain-back velveteen, Slip Op. 80-3
Pleading, amended; amended pleading, objective of filing, Slip Op. 80-4
Privileged documents:
Authorized to examine; International Trade Commission Chairman, Slip Op. 80-5
Protective order, Slip Op. 80-5
Protective order; privileged documents, Slip Op. 80-5
Spun acrylic yarns; Japan, Slip Op. 80-5
Summaries of Tariff Information; evidence of congressional intent, Slip Op. 80-3
Summary judgment, cross-motion granted; memorandum opinion and, order, Slip Op. 80-4
Tariff terms, construction of; common and commercial meaning, Slip Op. 80-3
Temporary restraining order:
Basis for granting, Slip Op. 80-6
Granted; antidumping actions, Slip Op. 80-6
Velvet; cotton pile fabric, Slip Op. 80-3
Velveteen, plain-back, Slip Op. 80-3
Words and phrases:
Certain characteristic weave, Slip Op. 80-3
Construction, Slip Op. 80-3
Pile, Slip Op. 80-3
Pile fabrics, Slip Op. 80-3
Yarns, spun acrylic, Slip Op. 80-5

333-196 Item 950-D T 1.11/3:14/52
378 continued
JAN 9 1981

Customs Bulletin

Regulations, Rulings, Decisions, and Notices concerning Customs and related matters

and Decisions

of the United States Court of Customs and Patent Appeals and the United States Court of International Trade

9247 H.G.

Vol. 14 DECEMBER 24, 1980 No. 52

This issue contains

T.D. 80-290 through 80-298
Proposed Rulemaking
Protest abstracts P80/183 through P80/187
Reap. abstracts R80/344
Recent Unpublished Customs Service Decision
International Trade Commission Notices

THE DEPARTMENT OF THE TREASURY
U.S. Customs Service

NOTICE

The abstracts, rulings, and notices which are issued weekly by the U.S. Customs Service are subject to correction for typographical or other printing errors. Users may notify the U.S. Customs Service, Logistics Management Division, Washington, D.C. 20229, of any such errors in order that corrections may be made before the bound volumes are published.

For sale by the Superintendent of Documents, U.S. Government Printing Office, Washington, D.C. 20402. Price: $2.25 (single copy domestic); $2.85 (single copy foreign). Subscription price: $85.00 a year domestic; $106.25 a year foreign.

U.S. Customs Service

Treasury Decisions

(T.D. 80-290)

Bonds

Approval and discontinuance of carrier bonds, Customs form 3587

Bonds of carriers for the transportation of bonded merchandise have been approved or discontinued as shown below. The symbol "D" indicates that the bond previously outstanding has been discontinued on the month, day, and year represented by the figures which follow. "PB" refers to a previous bond, dated as represented by figures in parentheses immediately following, which has been discontinued. If the previous bond was in the name of a different company or if the surety was different, the information is shown in a footnote at the end of the list.

Dated: December 4, 1980.

Name of principal and surety	Date of bond	Date of approval	Filed with district director/area director/amount
Bur-Cold Express, Inc., P.O. Box 3192, Brownsville, TX; motor carrier; Hartford Casualty Ins. Co.	Sept. 26, 1980	Oct. 14, 1980	Laredo, TX $25,000
Chamy Transport Ltd., 3080 Bernard Pilon St., St. Mathieu de Beloeil, Quebec, Canada J3G 4S5; motor carrier; Reliance Ins. Co.	Oct. 1, 1979	Oct. 8, 1980	Ogdensburg, NY $50,000
Claxon Truck Line, Inc., 453 Versailles Rd., P.O.B. 678, Frankfort, KY; motor carrier; Ohio Farmers Ins. Co. D 11/6/80	Nov. 6, 1979	Nov. 15, 1979	Cleveland, OH $100,000
Ernest James Cowart dba Jimmy Cowart Brokerage Co., P.O. Drawer NN, Pharr, TX; motor carrier; St. Paul Fire & Marine Ins. Co. (PB 7/31/79) D 10/16/80) [1]	July 31, 1979	Oct. 16, 1980	Laredo, TX $25,000
Dist-Trans Multi-Services, Inc., P.O. Box 7191, 1333 Nevada Blvd., Charlotte, NC; motor carrier; American Casualty Co. of Reading, PA.	Aug. 13, 1980	Oct. 29, 1980	Wilmington, NC $25,000

See footnotes at end of table.

Name of principal and surety	Date of bond	Date of approval	Filed with district director/area director/amount
M. W. Ettinger Inc., 2711 Fairview Ave., North, Roseville, MN; motor carrier; Safeco Ins. Co. of America	Sept. 19, 1980	Oct. 15, 1980	Minneapolis, MN $50,000
Farruggio's Bristol and Philadelphia Auto Express, Inc., 1419 Radcliffe St., Bristol, PA; motor carrier; The North River Ins. Co.	Oct. 1, 1980	Oct. 1, 1980	Philadelphia, PA $50,000
W. R. Filbin & Co., Inc., 2436 Bagley Ave., Detroit, MI; motor carrier; St. Paul Fire & Marine Ins. Co.	Oct. 15, 1980	Oct. 15, 1980	Detroit, MI $50,000
Fowler & Williams, Inc., 1300 Meylert Ave., Scranton, PA; motor carrier; Liberty Mutual Ins. Co. D 5/30/80	July 31, 1969	Aug. 12, 1969	New York, NY $50,000
Greenwood Motor Lines Inc., Box 336, Greenwood, SC; motor carrier; The Aetna Casualty & Surety Co.	Sept. 4, 1980	Oct. 28, 1980	Charleston, SC $25,000
Jet Services, Inc., 1946 S. First St., Milwaukee, WI; motor carrier; Continental Ins. Co.	July 1, 1980	Aug. 6, 1980	Milwaukee, WI $25,000
Laurel Hill Trucking Co., 614 New County Rd., Secaucus, NJ; motor carrier; Western Surety Co. (PB 10/16/79) D 10/16/80 [2]	Oct. 16, 1980	Oct. 16, 1980	Newark, NJ $50,000
Engle Oostdyk, Inc., 465 Blvd., Elmwood Park, NJ; motor carrier; Fireman's Fund Ins. Co. D 11/14/80	May 30, 1979	June 6, 1979	Philadelphia, PA $50,000
Red Ball Motor Freight, Inc., 3177 Irving Blvd., P.O. Box 47407, Dallas, TX; motor carrier; The Aetna Casualty & Surety Co. (PB 7/1/74) D 10/22/80 [3]	Oct. 9, 1980	Oct. 22, 1980	Houston, TX $25,000
Riverway Barge Co., 7703 Normandale Rd., Minneapolis, MN; water carrier; St. Paul Fire & Marine Ins. Co. (PB 10/16/69) D 9/30/80 [4]	Oct. 1, 1980	Oct. 1, 1980	Minneapolis, MN $100,000
Ryder Truck Lines, Inc., Ranger Div. of Ryder Truck Lines, Inc., Helms Express Div. of Ryder Truck Lines, Inc., Byrns Motor Express Div. of Ryder Truck Lines, Inc., All States Trucking Div. of Ryder Truck Lines, Inc., motor carrier: American Casualty Co. of Reading, PA (PB 6/20/75) D 9/17/80 [5]	Sept. 9, 1980	Sept. 17, 1980	Tampa, FL $25,000
John Schutt Jr., Inc., 665 River Rd., North Tonawanda, NY; motor carrier; The Travelers Indemnity Co. D 10/27/80	May 4, 1976	Jan. 7, 1977	Buffalo, NY $25,000
Southeastern Michigan Brokers Co., 559 North Cedar St., Imlay City, MI; motor carrier; St. Paul Fire & Marine Ins. Co.	Oct. 15, 1980	Oct. 17, 1980	Laredo, TX $25,000

See footnotes at end of table.

Name of principal and surety	Date of bond	Date of approval	Filed with district director/area director/amount
United Trucking Service, Inc., 8505 W. Warren, Dearborn, MI; motor carrier; United States Fire Ins. Co. (PB 11/29/72) D 9/2/80[6]	Aug. 30, 1980	Sept. 2, 1980	Detroit, MI $50,000

[1] Principal is Ernest James Cowart d.b.a. Cowart Truck Brokerage.
[2] Surety is Federal Ins. Co.
[3] Surety is Protective Ins. Co.
[4] Principal is Hennepin Towing Co.
[5] Principal is Ryder Truck Lines, Inc., Ranger Div. of Ryder Truck Lines, Inc., Helms Express Div. of Ryder Truck Lines, Inc., W. T. Byrns Div. of Ryder Truck Lines, Inc.
[6] Surety is the Buckeye Union Ins. Co.

BON-3-03

MARILYN G. MORRISON,
Director,
Carriers, Drawback and Bonds Division.

(T.D. 80-291)

White or Irish Potatoes, Other Than Certified Seed—Tariff-Rate Quota

Tariff-rate quota for the quota year beginning September 15, 1980, for white or Irish potatoes, other than certified seed

AGENCY: U.S. Customs Service, Department of the Treasury.

ACTION: Announcement of the quota quantity for white or Irish potatoes, other than certified seed, for the 12-month period beginning September 15, 1980.

SUMMARY: The tariff-rate quota for white or Irish potatoes, other than certified seed, pursuant to item 137.25, Tariff Schedules of the United States, for the 12-month period beginning September 15, 1980, is 45 million pounds.

EFFECTIVE DATES: The 1980 tariff-rate quota is applicable to white or Irish potatoes described in item 137.25, TSUS, entered, or withdrawn from warehouse, for consumption during the 12-month period beginning September 15, 1980.

FOR FURTHER INFORMATION CONTACT: Helen C. Rohrbaugh, Head, Quota Section, Duty Assessment Division, Office of Commercial Operations, U.S. Customs Service, Washington, D.C. 20229; 202-566-8592.

SUPPLEMENTARY INFORMATION: Each year the tariff-rate quota for potatoes described in item 137.25, Tariff Schedules of the

United States (TSUS), is based on the estimate by the Department of Agriculture of potatoes produced during the calendar year.

The estimate of the production of white or Irish potatoes, including seed potatoes, in the United States for the calendar year 1980, made by the U.S. Department of Agriculture as of September 1, 1980, was in excess of 21 billion pounds.

In accordance with headnote 2, part 8A, of schedule 1, Tariff Schedules of the United States, the quota quantity is not increased because the estimated production is greater than 21 billion pounds.

(QUO-2-CT:D:S:Q)

Dated: December 5, 1980.

WILLIAM T. ARCHEY,
Acting Commissioner of Customs.

[Published in the Federal Register, Dec. 11, 1980 (45 F.R. 81711)]

(T.D. 80-292)

Foreign Currencies—Daily Rates for Countries Not on Quarterly List

Rates of exchange based on rates certified to the Secretary of the Treasury by the Federal Reserve Bank of New York for the Brazil cruzeiro, People's Republic of China yuan, Hong Kong dollar, Iran rial, Philippines peso, Singapore dollar, Thailand baht (tical), and Venezuela bolivar

The Federal Reserve Bank of New York, pursuant to section 522(c), Tariff Act of 1930, as amended (31 U.S.C. 372(c)), has certified buying rates for the dates and foreign currencies shown below. The rates of exchange, based on these buying rates, are published for the information and use of Customs officers and others concerned pursuant to part 159, subpart C, Customs Regulations (19 CFR 159, subpart C).

Brazil cruzeiro:	
November 24–25, 1980	$0.0163
November 26–28, 1980	.0160
People's Republic of China yuan:	
November 24–28, 1980	$0.656254
Hong Kong dollar:	
November 24, 1980	$0.196483
November 25, 1980	.195848
November 26, 1980	.199382
November 27, 1980	Holiday
November 28, 1980	.195523
Iran rial:	
November 24–28, 1980	Not available
Philippines peso:	
November 24–28, 1980	$0.1324

Singapore dollar:

November 24, 1980	$0.477555
November 25–28, 1980	.477327

Thailand baht (tical):

November 24–28, 1980	$0.0485

Venezuela bolivar:

November 24–28, 1980	$0.2329

(LIQ-3-01 O:C:E)

Dated: November 28, 1980.

GWENN K. KIRSCHNER,
Acting Chief,
Customs Information Exchange.

(T.D. 80–293)

Foreign Currencies—Variances From Quarterly Rate

The following rates of exchange are based upon rates certified to the Secretary of the Treasury by the Federal Reserve Bank of New York, pursuant to section 522(c), Tariff Act of 1930, as amended (31 U.S.C. 372(c)), and reflect variances of 5 per centum or more from the quarterly rate published in T.D. 80–249 for the following countries. Therefore, as to entries covering merchandise exported on the dates listed, whenever it is necessary for Customs purposes to convert such currency into currency of the United States, conversion shall be at the following rates:

Austria schilling:

November 24, 1980	$0.073529
November 25, 1980	.073746
November 26, 1980	.073394
November 27, 1980	Holiday
November 28, 1980	.073206

Belgium franc:

November 24, 1980	$0.032436
November 25, 1980	.032552
November 26, 1980	.032373
November 27, 1980	Holiday
November 28, 1980	.032289

Denmark krone:

November 24, 1980	$0.169866
November 25, 1980	Quarterly
November 26, 1980	.169463
November 27, 1980	Holiday
November 28, 1980	.169019

France franc:	
November 24, 1980	$0. 224593
November 25, 1980	. 225149
November 26, 1980	. 224291
November 27, 1980	Holiday
November 28, 1980	. 223614
Germany deutsche mark:	
November 24, 1980	$0. 521567
November 25, 1980	. 523286
November 26, 1980	. 520481
November 27, 1980	Holiday
November 28, 1980	. 518968
Ireland pound:	
November 24–25, 1980	$1. 9480
November 26, 1980	1. 9375
November 27, 1980	Holiday
November 28, 1980	1. 9330
Italy lira:	
November 24, 1980	$0. 001098
November 25, 1980	. 001097
November 26, 1980	. 001095
November 27, 1980	Holiday
November 28, 1980	. 001093
Netherlands guilder:	
November 24, 1980	$0. 480769
November 25, 1980	. 482276
November 26, 1980	. 479731
November 27, 1980	Holiday
November 28, 1980	. 478927
Spain peseta:	
November 26, 1980	$0. 012845
Sri Lanka rupee:	
November 24–28, 1980	$0. 058140
Switzerland franc:	
November 24, 1980	$0. 577534
November 25, 1980	Quarterly
November 26, 1980	. 578536
November 27, 1980	Holiday
November 28, 1980	. 575209

(LIQ-3-01 O:C:E)

Dated: November 28, 1980.

GWENN K. KIRSCHNER,
Acting Chief,
Customs Information Exchange.

(T.D. 80-294)

Bonds

Approval and discontinuance of consolidated aircraft bonds (air carrier blanket bonds), Customs form 7605

The following consolidated aircraft bonds have been approved or discontinued as shown below. The symbol "D" indicates that the bond previously outstanding has been discontinued on the month, day, and year represented by the figures which follow. "PB" refers to a previous bond, dated as represented by the figures in parentheses immediately following, which has been discontinued. If the previous bond was in the name of a different company or if the surety was different, the information is shown in a footnote at the end of the list.

Dated: December 9, 1980.

Name of principal and surety	Date term commences	Date of approval	Filed with district director/area director/amount
Cia Mexicana de Aviacion, S.A., Apartado 901, Mexico D.F.; Federal Insurance Co.[1]	Oct. 31, 1980	Oct. 31, 1980	New York, NY $100,000
Kuwait Airways Corp., 30 Rockefeller Plaza, NY, NY; American Casualty Co. of Reading, PA.[2]	Nov. 12, 1980	Nov. 12, 1980	New York Seaport $100,000
Seaboard World Airlines, Inc., John F. Kennedy Air port, Jamaica, NY; Peerless Ins. Co. D 10/17/80	Apr. 14, 1980	Apr. 14, 1980	J. F. K. Airport $100,000
Western Air Lines, Inc., 6150 Century, Los Angeles, CA; Travelers Indemnity Co.[1]	June 30, 1980	Aug. 11, 1980	Anchorage, AK $100,000
Western Air Lines, Inc. P.O. Box 90, 005, Airport Station, Los Angeles, CA; Federal Insurance Co. D 8/10/80	May 11, 1967	June 30, 1967	Los Angeles, CA $100,000

[1] The foregoing principal has been designated as a carrier of bonded merchandise.
[2] The foregoing principal has not been designated as a carrier of bonded merchandise.

BON-3-03

MARILYN G. MORRISON,
Director,
Carriers, Drawback and Bonds Division.

(T.D. 80-295)

Cotton and Manmade Fiber Textile Products—Restriction on Entry

Restriction on entry of cotton and manmade fiber textile products manufactured or produced in the Dominican Republic

There is published below a directive of October 7, 1980, received by the Commissioner of Customs from the chairman, Committee for

333-196 O - 80 - 2

the Implementation of Textile Agreements, concerning restriction on entry of cotton and manmade fiber textile products in certain categories manufactured or produced in the Dominican Republic. This directive amends, but does not cancel, that committee's directive of May 30, 1980 (T.D. 80–174).

This directive was published in the Federal Register on October 14, 1980 (45 F.R. 67714), by the committee.

(QUO-2-1)

Dated: November 25, 1980.

WILLIAM D. SLYNE
(For Richard R. Rosettie, Acting
Director, Duty Assessment Division).

(T.D. 80–296)

Synopses of Drawback Decisions

The following are synopses of drawback rates issued May 19, 1980, to October 6, 1980, inclusive, pursuant to sections 22.1 through 22.5, inclusive Customs Regulations.

In the synopses below are listed for each drawback rate approved under 19 U.S.C. 1313(a), the name of the company, the specified articles on which drawback is authorized, the merchandise which will be used to manufacture or produce these articles, the factories where the work will be accomplished, the date the statement was signed, the basis for determining payment, the Regional Commissioner who issued the rate, and the date on which it was signed.

(DRA-1-09)

Dated: December 9, 1980.

MARILYN G. MORRISON,
Director,
Carriers, Drawback and Bonds Division.

(A) Company: Allied Pipe and Supply, Inc.
Articles: API tubing and pup joints.
Merchandise: Imported plain end API tubing.
Factory: Houston, Tex.
Statement signed: August 6, 1980.
Basis of claim: Appearing in.
Rate issued by Regional Commissioner of Customs: Houston, September 9, 1980.

(B) Company: Baker Material Handling Corp.
Articles: Forklift trucks, attachments, assemblies and parts.
Merchandise: Imported forklift chassis, attachments, assemblies, and parts.
Factory: Brooklyn, Ohio.
Statement signed: June 18, 1980.
Basis of claim: Used in.
Rate issued by Regional Commissioner of Customs: Chicago, September 16, 1980.

(C) Company: Bennett Pump Co.
Articles: Service station gasoline pumps and barrel pumps for other petroleum products.
Merchandise: Imported mechanical computers, see gage bodies, flanges, lip pistons, three-pole switches, hub control valves, control valve stems, explosion proof fluorescent lighting, and bearings.
Factory: Muskegon, Mich.
Statement signed: August 1, 1980.
Basis of claim: Used in.
Rate issued by Regional Commissioner of Customs: Chicago, August 26, 1980.

(D) Company: Dyonics Inc.
Articles: Endoscopes and replacement parts; light guides.
Merchandise: Imported lenses, stainless steel tubing, flexible tubing, prisms.
Factory: Woburn, Mass.
Statement signed: July 23, 1980.
Basis of claim: Appearing in.
Rate issued by Regional Commissioner of Customs: Boston, August 20, 1980.

(E) Company: E. I. du Pont de Nemours and Co., Inc.
Articles: Pesticides.
Merchandise: Imported cyanamide.
Factory: Belle, W. Va.
Statement signed: August 1, 1980.
Basis of claim: Used in.
Rate issued by Regional Commissioner of Customs: Baltimore, September 18, 1980.

(F) Company: Extel Corp.
Articles: Teleprinters and parts and subassemblies thereof.
Merchandise: Imported parts and subassemblies of teleprinters, such as but not limited to paper type punches, electronic PC boards, and electric motors.

Factories: Northbrook, Ill. (7).
Statement signed: July 3, 1980.
Basis of claim: Appearing in.
Rate issued by Regional Commissioner of Customs: Chicago, August 20, 1980.

(G) Company: Fabric Embossing Co., Inc.
Articles: Embossed piece goods.
Merchandise: Imported piece goods.
Factory: New York, N.Y.
Statement signed: July 30, 1980.
Basis of claim: Used in, less valuable waste.
Rate issued by Regional Commissioner of Customs: New York, August 13, 1980.

(H) Company: FloScan Instrument Co.
Articles: Flow transducers.
Merchandise: Imported unset jewel bearings, steel pivots, capacitors, resistors, light emitting diodes, phototransistors.
Factory: Seattle, Wash.
Statement signed: February 15, 1980.
Basis of claim: Appearing in.
Rate issued by Regional Commissioner of Customs: San Francisco, September 11, 1980.
Revokes: T.D. 79-268-F.

(I) Company: Flynt Knits Inc.
Articles: Greige circular knitted fabric, finished circular knitted fabric.
Merchandise: Imported 20 denier monofilament yarn.
Factories: Greensboro, Graham, Burlington, and Ashville, N.C.
Statement signed: July 2, 1980.
Basis of claim: Appearing in.
Rate issued by Regional Commissioner of Customs: Baltimore, August 4, 1980.

(J) Company: Ford Motor Co.
Articles: Passenger cars; trucks; and finished parts and subassemblies thereof.
Merchandise: Imported and drawback automobile and truck parts, finished and unfinished; imported clocks, tires, inner tubes, radios, and parts.
Factories: Various factories as listed in manufacturer's statement.
Statement signed: April 30, 1980.
Basis of claim: Appearing in.

Rate issued by Regional Commissioner of Customs: Chicago, May 19, 1980.
Revokes: T.D. 54547-B.

(K) Company: Hart Ski Manufacturing Co., Inc.
Articles: Skis.
Merchandise: Imported rubber foil, laminated plastic sheeting, plastic sheeting base material, steel edges, rubber strips, top-combined and bottom-combined laminates, top and bottom material, metal parts and fleece.
Factory: St. Paul, Minn.
Statement signed: August 5, 1980.
Basis of claim: Used in.
Rate issued by Regional Commissioner of Customs: Chicago, August 20, 1980.
Revokes: T.D. 79-260-N.

(L) Company: Hewlett Packard.
Articles: Functional printed circuit boards and other electronic assemblies.
Merchandise: Imported nonfunctional printed circuit boards and other electronic assemblies.
Factory: Cupertino, Calif.
Statement signed: July 21, 1980.
Basis of claim: Appearing in.
Rate issued by Regional Commissioner of Customs: San Francisco, August 21, 1980.

(M) Company: Hughes Aircraft Co.
Articles: Communication satellites, spacecraft, and electronic and mechanical subassemblies for satellites and spacecraft.
Merchandise: Imported electronic and mechanical components.
Factory: El Segundo, Calif.
Statement signed: September 9, 1980.
Basis of claim: Used in.
Rate issued by Regional Commissioner of Customs: Los Angeles, October 6, 1980.
Revokes: T.D. 71-97-P.

(N) Company: Interroll Corp.
Articles: Interroll agricon hanging cableway tractor.
Merchandise: Imported and/or drawback Deutz 8 hp diesel industrial air cooled engine, model FIL 208.
Factory: Pompano Beach, Fla.
Statement signed: August 11, 1980.

Basis of claim: Appearing in.
Rate issued by Regional Commissioner of Customs: New York, August 20, 1980.

(O) Company: Lore' International (Disc.), Inc.
Articles: Silk wearing apparel.
Merchandise: Imported silk yardage.
Factory: Los Angeles, Calif.
Statement signed: July 29, 1980.
Basis of claim: Used in.
Rate issued by Regional Commissioner of Customs: Los Angeles, August 6, 1980.

(P) Company: Nashua Corp.
Articles: Carbonless paper.
Merchandise: Imported BB138, DVL, DEBN (red), ATP (green), C-1261, DEPM, and BLMB dyes.
Factories: Merrimack and Nashua, N.H.
Statement signed: August 19, 1980.
Basis of claim: Used in.
Rate issued by Regional Commissioner of Customs: Boston, August 28, 1980.
Revokes: T.D. 78-301-R, as amended by T.D. 79-125-R.

(Q) Company: National Pharmaceutical Manufacturing Co.
Articles: Glass bottles containing pharmaceutical materials.
Merchandise: Imported glass bottles.
Factory: Baltimore, Md.
Statement signed: August 1, 1980.
Basis of claim: Used in.
Rate issued by Regional Commissioner of Customs: Baltimore, September 17, 1980.

(R) Company: Nicholson Manufacturing Co.
Articles: Chippers, barkers, complete fixed and mobile mills, chip screens, loaders, cut-off saws, and spare parts.
Merchandise: Imported castings, bearings, rolled drums, carbide for knife edges, gear boxes, ring bearings, electric motors, engines, hydraulic pumps and motors, steel.
Factory: Seattle, Wash.
Statement signed: July 7, 1980.
Basis of claim: Used in.
Rate issued by Regional Commissioner of Customs: San Francisco, July 14, 1980.

(S) Company: Petit-Bateau U.S.A. Inc.
Articles: Short Sleeve T-shirts.
Merchandise: Imported knitted fabric.
Factory: Newtown, Pa.
Statement signed: July 10, 1980.
Basis of claim: Appearing in.
Rate issued by Regional Commissioner of Customs: New York, August 8, 1980.

(T) Company: Polaroid Corp.
Articles: Polacolor bulk negative, SX–70 bulk negative, type 88 film packs, type 108 film packs and SX–70 film packs.
Merchandise: Imported and/or drawback photographic gel; inert gel, deionized gel and derivatized gel.
Factories: New Bedford, Waltham, and Needham, Mass.
Statement signed: August 4, 1980.
Basis of claim: Used in.
Rate issued by Regional Commissioner of Customs: New York, August 21, 1980.

(U) Company: Power Packaging Corp.
Articles: Dry beverage powdered drink bases.
Merchandise: Imported encapsulated alcohol; drawback refined sugar.
Factory: Placentia, Calif.
Statement signed: July 3, 1980.
Basis of claim: Used in.
Rate issued by Regional Commissioner of Customs: Los Angeles, August 6, 1980.
Revokes: T.D. 80–204–S.

(V) Company: Pulsar Time, Inc.
Articles: Dialed movements, finished watches with or without bands or bracelets.
Merchandise: Imported watch heads, watch movements, modules, watch cases, watch dials, bracelets, straps, watch bands.
Factory: Allendale, N.J.
Statement signed: July 30, 1980.
Basis of claim: Used in.
Rate issued by Regional Commissioner of Customs: New York, August 8, 1980.

(W) Company: Roskamp Manufacturing, Inc.
Articles: Roller mills and finished rolls.
Merchandise: Imported iron with shafts.
Factories: Cedar Falls and Waterloo, Iowa.

Statement signed: July 21, 1980.
Basis of claim: Used in.
Rate issued by Regional Commissioner of Customs: Chicago, August 15, 1980.
Revokes: T.D. 69-144-Q.

(X) Company: Teledyne Allvac.
Articles: Titanium alloy mill products—ingot, billet, bar.
Merchandise: Imported titanium sponge.
Factory: Monroe, N.C.
Statement signed: August 25, 1980.
Basis of claim: Used in, less valuable waste.
Rate issued by Regional Commissioner of Customs: Baltimore, September 12, 1980.

(Y) Company: Teledyne Vasco Division of Teledyne Industries, Inc.
Articles: Titanium sheet, wire rods and other semi-finished forms.
Merchandise: Imported and/or drawback titanium ingots and bar.
Factories: Latrobe and Monaco, Pa.; Halifax, Va.
Statement signed: July 24, 1980.
Basis of claim: Used in, less valuable waste.
Rate issued by Regional Commissioner of Customs: New York, August 13, 1980.

(Z) Company: Weyerhaeuser Co.
Articles: Prefinished plywood doorskins; prefinished plywood panels; vinyl or paper overlay panels.
Merchandise: Imported doorskins and plywood panels.
Factories: Corona and Cucamonga, Calif.; Fort Wayne, Ind.; Aberdeen, Wash.; Chesapeake, Va.; Memphis, Tenn.
Statement signed: July 25, 1980.
Basis of claim: Appearing in.
Rate issued by Regional Commissioner of Customs: Los Angeles, August 25, 1980.
Revokes: T.D. 54728-G, as amended by T.D.'s 55003-K, 55214-H, 56328-Z, 69-132-W, 70-12-Y, 74-179-N, and 76-287-R.

Exxon Chemical Co., U.S.A. operating under T.D. 78-379-I has changed its name to Exxon Chemical Americas, a division of Exxon Chemical Co.

Seydel-Woolley & Co. operating under T.D. 76-114-N, as amended by T.D. 76-300-W has changed its name to AZS Corp.

Seydel Companies operating under T.D. 76-300-V has changed its name to Seydel International, Inc.

(T.D. 80-297)

Synopses of Drawback Decisions

The following are synopses of drawback rates issued March 28, 1980, to October 6, 1980, inclusive, pursuant to sections 22.1 through 22.5, inclusive, Customs Regulations.

In the synopses below are listed for each drawback rate approved under 19 U.S.C. 1313(b), the name of the company, the specified articles on which drawback is authorized, the merchandise which will be used to manufacture or produce these articles, the factories where the work will be accomplished, the date the statement was signed, the basis for determining payment, the Regional Commissioner to whom the rate was forwarded, and the date on which it was forwarded.

Dated: December 9, 1980.

(DRA-1-09)

MARILYN G. MORRISON,
Director,
Carriers, Drawback and Bonds Division.

(A) Company: American Appliance Manufacturing Co.
Articles: Hot water heaters, pump tanks, storage tanks, and parts thereof.
Merchandise: Cold and hot rolled steel sheet, strip and blanks.
Factories: Santa Monica and Huntington Park, Calif.
Statement signed: August 25, 1980.
Basis of claim: Appearing in.
Rate forwarded to Regional Commissioner of Customs: New York, October 3, 1980.

(B) Company: Armco Inc.
Articles: Mechanical tubing, steel plates, sheets, and coils.
Merchandise: Steel slabs rimmed steel.
Factories: Middletown, Ohio; Ashland, Ky.
Statement signed: March 7, 1980.
Basis of claim: Appearing in.
Rate forwarded to Regional Commissioner of Customs: Chicago, September 16, 1980.

(C) Company: Cardinal American Corp., Cardinal Threading Division.
Articles: Steel fasteners, mainly rods, studs, and bolts.
Merchandise: Steel rods.
Factory: Bedford Heights, Ohio.
Statement signed: February 25, 1980.

333-196 O - 80 - 3

Basis of claim: Appearing in.
Rate issued by Regional Commissioner of Customs in accordance with section 22.4(o)(2): Chicago, March 28, 1980.
Revokes: T.D. 79–192–S, to cover a change in name from Production Experts, Inc., Cardinal Foundry & Supply Co., Threading Division, and to cover a change in location of factory.

(D) Company: Chase Brass & Copper Co., Inc., Chase Nuclear Division.
Articles: Titanium products and titanium alloy products in the form of billet, bar, seamless pipe, and extruded shapes.
Merchandise: Titanium, commercially pure, and alloy grades in the form of billet, bar, pipe, and extruded parts.
Factory: Waterbury, Conn.
Statement signed: May 30, 1980.
Basis of claim: Appearing in.
Rate forwarded to Regional Commissioner of Customs: New York, October 3, 1980.

(E) Company: Clepro Inc.
Articles: Rough heavy metal stampings, circles, rings, sprocket and gear blanks, finished sprockets.
Merchandise: Hot rolled steel plates; stainless steel sheets and plates.
Factories: Cleveland, Ohio; (2).
Statement signed: December 28, 1979.
Basis of claim: Appearing in.
Rate forwarded to Regional Commissioner of Customs: New York, September 25, 1980.
Revokes: T.D. 75–233–X.

(F) Company: Dow Chemical Co.
Articles: Solid epoxy resins and solutions, brominated epoxy resins and solutions, and vinyl ester resins.
Merchandise: Dow epoxy resin (DER 331).
Factories: Torrance, Calif.; Joliet, Ill.; Freeport, Tex.
Statement signed: April 29, 1980.
Basis of claim: Appearing in.
Rate forwarded to Regional Commissioner of Customs: Chicago, September 30, 1980.
Revokes: Headquarter's unpublished authorization letter dated June 12, 1980.

(G) Company: Eli Lilly & Co.
Articles: Fenarimol (Rubigan), a fungicide.

Merchandise: 2-chlorobenzoyl chloride; formamide technical; 5-bromopyrimidine; 2,4′-dichlorobenzophenone.
Factory: Lafayette, Ind.
Statement signed: April 21, 1980.
Basis of claim: Used in.
Rate forwarded to Regional Commissioner of Customs: Chicago, September 18, 1980.

(H) Company: Eli Lilly & Co.
Articles: Nuarimol (Trimidal), a fungicide.
Merchandise: 2-chlorobenzoyl chloride· formamide technical; 5-bromopyrimidine; 2,4′-dichlorobenzophenone; fluorobenzene.
Factory: Lafayette, Ind.
Statement signed: April 21, 1980.
Basis of claim: Used in.
Rate forwarded to Regional Commissioner of Customs: Chicago September 19, 1980.

(I) Company: Ethyl Corp.
Articles: Motor fuel antiknock compound.
Merchandise: Ethyl chloride.
Factories: Pasadena, Tex.; Baton Rouge, La.
Statement signed: August 1, 1980.
Basis of claim: Used in.
Rate forwarded to Regional Commissioner of Customs: New Orleans, October 1, 1980.

(J) Company: Exide Corp.
Articles: Lead acid batteries.
Merchandise: Lead.
Factories: Allentown, Pa.; Atlanta, Ga.; Buffalo, N.Y.; Dallas, Tex.; Fairfield, Conn.; Los Angeles and Milpitas, Calif.; Richmond, Ky.; Sumter, S.C.
Statement signed: May 1, 1980.
Basis of claim: Appearing in.
Rate issued by Regional Commissioner of Customs in accordance with section 22.4(o)(2): Baltimore, May 21, 1980.
Revokes: T.D. 79–155–G, to cover change in name from ESB Ray-O-Vac Management Corp.

(K) Company: Farmhand, Inc.
Articles: Farm equipment, machinery, and parts.
Merchandise: Steel sheet, strip, blanks, and plate.
Factories: Green Isle, Minn.; Grinnell, Iowa.
Statement signed: August 19, 1980.

Basis of claim: Appearing in.
Rate forwarded to Regional Commissioner of Customs: New York, September 16, 1980.

(L) Company: Florida Wire & Cable Co.
Articles: Wire, wire stranded, wire galvanized and wire galvanized and stranded.
Merchandise: High carbon wire rods.
Factories: Jacksonville and Sanderson, Fla.
Statement signed: August 18, 1980.
Basis of claim: Appearing in.
Rate forwarded to Regional Commissioner of Customs: Miami, October 6, 1980.

(M) Company: Hayes-Albion Corp.
Articles: Automotive and truck exhaust systems, pulleys, door frames, moldings, engine cooling fans, and window assemblies.
Merchandise: Cold rolled sheet steel, aluminized, in coils.
Factories: Jackson, Miss.; West Unity and Bryan, Ohio.
Statement signed: January 7, 1980.
Basis of claim: Used in, less valuable waste.
Rate forwarded to Regional Commissioner of Customs: Chicago, October 3, 1980.

(N) Company: Interpace Corp., Lapp Division.
Articles: High voltage insulators.
Merchandise: Malleable iron castings.
Factories: Le Roy, N.Y.; Sandersville, Ga.
Statement signed: September 11, 1980.
Basis of claim: Appearing in.
Rate forwarded to Regional Commissioner of Customs: Boston, October 6, 1980.

(O) Company: LaSalle Steel Co.
Articles: Drawn steel wire, rod and bar.
Merchandise: Hot rolled steel bar, wire and rod.
Factories: Hammond and Griffiths, Ind.: Spring City, Pa.
Statement signed: April 10, 1980.
Basis of claim: Appearing in.
Rate forwarded to Regional Commissioner of Customs: New York, October 3, 1980.

(P) Company: Lewcott Chemicals & Plastics, Division of BBF, Inc.
Articles: Reinforcement discs of resin impregnated fiberglass fabrics and resin impregnated roll goods of fiberglass.

Merchandise: Greige goods.
Factory: Millbury, Mass.
Statement signed: September 18, 1980.
Basis of claim: Used in.
Rate forwarded to Regional Commissioner of Customs: Boston, September 29, 1980.

(Q) Company: Maremont Corp.
Articles: Shock absorbers, exhaust systems and parts such as but not limited to piston rods, tubing for shock absorbers, internal tubing for mufflers, baffle plates.
Merchandise: Cold rolled steel coil; hot rolled rod; galvanized steel coil; aluminized steel coil.
Factories: Chickasha, Okla.; Fort Loramie, Ohio; Loudon, Pulaski, and Ripley, Tenn.; Saco, Maine.
Statement signed: March 26, 1980.
Basis of claim: Appearing in.
Rate forwarded to Regional Commissioners of Customs: New York and Chicago, September 23, 1980.

(R) Company: Mercury Stainless Corp.
Articles: Stainless steel sheets, polished, and cut to specifications.
Merchandise: Stainless steel coils.
Factory: Wheeling, Ill.
Statement signed: July 30, 1980.
Basis of claim: Appearing in.
Rate forwarded to Regional Commissioner of Customs: Chicago October 1, 1980.

(S) Company: Mid-America Webpress, Inc.
Articles: Complete magazines.
Merchandise: Machine-coated gravure paper.
Factory: Lincoln, Nebr.
Statement signed: March 29, 1979.
Basis of claim: Appearing in.
Rate forwarded to Regional Commissioner of Customs: New York, September 25, 1980.

(T) Company: Mor-Flo Industries, Inc.
Articles: Hot water heaters; pump tanks; storage tanks.
Merchandise: Hot and cold rolled steel sheet, strip, and blanks.
Factory: Johnson City, Tenn.
Statement signed: September 4, 1980.
Basis of claim: Appearing in.

Rate forwarded to Regional Commissioner of Customs: New York, September 16, 1980.

(U) Sharon Steel Corp.
Articles: Hot and cold rolled steel sheet, strip; coated steel (galvanized or zincrometal) sheet and strip; steel plate and bars; structural shapes.
Merchandise: Steel ingots, billets, blooms, and slabs.
Factory: Farrell, Pa.
Statement signed: August 7, 1980.
Basis of claim: Appearing in.
Rate forwarded to Regional Commissioner of Customs: New York September 25, 1980.

(V) Company: Southwestern Porcelain, Inc.
Articles: Agricultural forage and grain silos; liquid manure tanks.
Merchandise: Porcelain enameling hot rolled steel sheets, plates, and blanks.
Factory: Sand Springs, Okla.
Statement signed: June 30, 1980.
Basis of claim: Appearing in.
Rate forwarded to Regional Commissioner of Customs: New York, September 23, 1980.
Revokes: T.D. 79-78-X and T.D. 79-259-X.

(W) Company: Tillie Lewis Foods, Division of Ogden Food Products Corp.
Articles: Metal containers.
Merchandise: Electrolytic tinplate and tin-free steel.
Factory: Stockton, Calif.
Statement signed: May 27, 1980.
Basis of claim: Appearing in.
Rate issued by Regional Commissioner of Customs in accordance with section 22.4(o)(2): San Francisco, September 3, 1980.
Revokes: T.D. 77-135-Y, to cover successorship from Tillie Lewis Foods, Inc.

(X) Company: Tillie Lewis Foods, Division of Ogden Food Products Corp.
Articles: Canned fruits, fruit cocktail, fruits for salad, fruit nectars, tomato catsup and chili sauce.
Merchandise: Hard and liquid refined sugar.
Factory: Stockton, Calif.
Statement signed: May 27, 1980.
Basis of claim: Used in.

Rate issued by Regional Commissioner of Customs in accordance with section 22.4(o)(2): San Francisco, October 2, 1980.
Revokes: T.D. 54975-D, as amended by T.D. 55587-D, to cover successorship from Tillie Lewis Foods, Inc.

(Y) Company: Vanderbilt Chemical Corp.
Articles: Ethyl tellurac (tellurium diethyldithiocarbamate) in powder or rod forms.
Merchandise: Tellurium dioxide.
Factory: Murray, Ky.
Statement signed: September 27, 1979.
Basis of claim: Appearing in.
Rate forwarded to Regional Commissioner of Customs: New York, September 18, 1980.
Revokes: T.D. 55401-G.

(Z) Company: Wellman Industries, Inc.
Articles: Wool, sorted and/or graded, scoured (from grease wool), carded, comb waste (noils), combed (tops and preshrunk tops), and wool matchings.
Merchandise: Grease wool; scoured wool.
Factory: Johnsonville, S.C.
Statement signed: August 8, 1980.
Basis of claim: Used in, with distribution to the products obtained in accordance with their relative value at the time of separation.
Rate forwarded to Regional Commissioners of Customs: Boston, New York, Baltimore, and Miami, September 29, 1980.
Revokes: T.D. 55587-P.

(T.D. 80-298)

Guidelines for Disposition of Violations of the Timely Entry Summary Filing Requirements

1. INTRODUCTION

The following materials have been distributed throughout the Customs Service as Manual Supplement 4400-01, dated November 18 1980. The Manual Supplement promulgates new procedures and guidelines for disposing of violations of the timely entry summary filing requirements contained in part 142, Customs Regulations (19 CFR part 142) as authorized by sections 484(a) and 448(b) of the Tariff Act of 1930, as amended (19 U.S.C. 1484(a), 1448(b)).

2. BACKGROUND

When merchandise is released under sections 142.3(a) and 142.21, Customs Regulations (19 CFR 142.3(a), 142.21) before the entry summary is filed, the entry summary must be filed within 10 working days in accordance with sections 142.21(a) and 142.23, Customs Regulations (19 CFR 142.21(a), 142.23). An importer filing the entry summary late is subject to a demand for liquidated damages in the amount of the value of the goods plus any duties and taxes owing (see sec. 113.14(g) (1) and (2), Customs Regulations (19 CFR 113.14(g) (1) and (2))).

The demand is issued on the CF 5955A and the violator is offered the opportunity to petition for relief. Guidelines contained in the Fines, Penalties and Forfeitures Handbook and section 172.22(d), Customs Regulations, are applied in disposition of the cases. The process is lengthy and time consuming. Generally, the issues involved are the same and there is very little unusual by way of explanation that the petitioner can offer to justify mitigation which would vary from the guidelines.

Practices vary widely through out the Customs Service. Some district follow the guidelines strictly. Others have established practices which permit more lenient application of the guidelines. The results in any event have been less than uniform. Because of the routine nature of the cases, the amount of work per case performed by both Customs and the public has been excessive.

Some districts have used a parking ticket approach in making demands for liquidated damages in timely entry summary violations The violator is advised of the violation and that he may pay a certain sum in satisfaction of the case, perhaps together with the filing of a petition.

This approach has genuine merit. Routine cases may be routinely mitigated, while the petitioning process which usually only postpones what is in ordinary cases a predetermined decision may be avoided. Generally Customs has established mitigation based upon the number of days the entry summary is late. Under the existing petitioning procedure, arguments for relief rarely establish bases for varying from the usual amounts. By eliminating the petitioning step both the importer and Customs are saved time and money.

Also, with our new cash flow procedure duties are being deposited usually before the entry summary is rejected. The old guidelines were calculated to deny the importer the advantage of the use of his money during the period which the duties were withheld. These old guidelines now arguably impose an unintended result when applied in cases where the duty has already been deposited. New guidelines in this area have been argued for as a matter of fairness.

Accordingly, it is our purpose to adopt new guidelines which in part incorporate concepts already in use in the field in disposing of these types of violations. Instructions for calculating mitigated amounts have been prepared together with a modified CF 5955A for use especially in timely entry summary cases.

3. ACTION

Commencing on January 19, 1981, Customs shall issue demands for liquidated damages for failure to file entry summaries timely in accordance with the following instructions.

a. *Modified CF 5955A.*—Notices of Liquidated Damages Incurred (CF 5955A) shall be issued on the modified form attached as attachment A (attachment A may be photocopied or the information may be typed on each CF 5955A at the discretion of each field office). The modified form specifies two options from which the petitioner may choose to resolve the demand made against him.

(1) *Option 1.*—He may pay a specified sum within 60 days and the case will be closed. By electing this option in lieu of petitioning, he waives his right to file a petition. He may, however, file a supplemental petition, if he does so in accordance with the Customs Regulations and has some new fact or information which merits consideration.

(2) *Option 2.*—The second option is to file a petition seeking presumably more relief than would be had by paying the mitigated amount specified. The District or Area Director shall dispose of this petition in accordance with section 172.22(d), Customs Regulations. Ordinarily, mitigation under option 2 shall not be in an amount in excess of the amount determined in accordance with option 1 unless there are extraordinary aggravating circumstances present.

b. *Calculation of Mitigated Amount.*—The following schedules set forth the amounts and where appropriate the calculations to be used in determining mitigated amounts.

(1) *Nondutiable Entry.*—Entry summary filed late:

(a) 1–5 days late: $50.

(b) 6–10 days late: $100.

(c) Over 10 days late: $150.

(2) *Nondutiable Entry.*—Entry summary filed timely, rejected and refiled late:

(a) 1–5 days late: $25.

(b) 6–10 days late: $50.

(c) Over 10 days late: $75.

(3) *Dutiable Entry.*—Entry summary filed and duty deposited timely, summary rejected and refiled late:

(a) 1–5 days late: $50.

(b) 6–10 days late: $100.

(c) 11–30 days late: $150.

(d) Over 30 days late: 10 percent of duty but not less than $200.

(4) *Dutiable Entry.*—Entry summary filed late, and/or duties not deposited:

The mitigated amounts in this category must vary according to the amount of the duty withheld in order to encourage compliance with the law and regulations. If the amounts were fixed at a small flat rate without regard to the amount of the duties actually withheld, we would be in effect encouraging importers to pay their duties late because it would be cheaper to borrow the money from the Government than from private lenders. The first increment is from $.01 to $1,000 and the latter increments are in amounts of $10,000.

(a) Withheld Duty; $.01 to $1,000:

(i) 1–10 days late: 10 percent of the duty but not less than $100.

(ii) 11–30 days late: 50 percent of the duty but not less than $150.

(iii) Over 30 days ate: 100 percent of the duty but not less than $200.

(b) Withheld Duty; $1,001 to $10,000: (The mitigated amounts in this category are the base figures for calculating mitigated amounts for all increments larger than $10,000):

(i) 1–5 days late: $100.

(ii) 6–10 days late: $200.

(iii) 11–30 days late: $300.

(iv) Over 30 days late: $300 plus $300 for each additional 30 days or a portion thereof.

(c) Withheld Duty; $10,001 to $20,000:

(i) 1–5 days late: 2 times the base figure of $100 equal $200.

(ii) 6–10 days late: 2 times the base figure of $200 equal $400.

(iii) 11–30 days late: 2 times the base figure of $300 equal $600.

(iv) Over 30 days late: 2 times the base figure of $300 plus $300 for each additional 30 days or a portion thereof equal $1,200 for any number of days between 31 and 60.

(d) Withheld Duty; $20,001 to $30,000:

(i) 1–5 days late: 3 times the base figure equal $300.

(ii) 6–10 days late: 3 times the base figure equal $600.

(iii) 11–30 days late: 3 times the base figure equal $900.

(iv) Over 30 days late: 3 times the base figure equal $1,800 for any number of days between 31 and 60.

(e) Withheld Duty in Excess of $30,000: Following the same pattern established in subsections (c) and (d) above, mitigated amounts may be calculated by multiplying the base figure for the number of days late as established in subsection (b) by the appropriate factor for the increment in which the amount of the withheld duties falls.

Increments are in amounts of $10,000 for all but the first $1,000. The factor is the first digit of the last number in the increment (Ex: 4 for $30,001 to $40,000) or the first two digits or first three digits or the like if the withheld duties exceed $100,000 (Ex: 24 for $230,001 to $240,000 or 782 for $7,810,001 to $7,820,000)

c. *Entry Summary Not Filed.*—If at the time the demand for liquidated damages is issued the entry summary has not been filed, the full amount of the liquidated damages shall be assessed and no mitigated amount shall be offered under Option 1. A prerequisite for any mitigation of a demand for liquidated damages under this procedure is that the entry summary has been filed and the duty deposited. Therefore, no demand will be mitigated until the summary is filed and the duty deposited.

d. *Second Offenses.*—No account will be taken in following this procedure of whether the violation constitutes a second or subsequent offense. If an importer frequently abuses his privileges and fails to meet his obligations under immediate release procedures, steps will be taken in accordance with the regulations and existing policy directives to suspend those privileges.

4. SUPERSEDED MATERIAL

Customs Circular ENT-3-PEN, dated September 27, 1972, is superseded by Manual Supplement 4400-01, dated November 18, 1980.

5. ATTACHMENT

DONALD W. LEWIS,
Director, Office of Regulations and Rulings.

(RRUEM, 611077 JP)

Dated: December 9, 1980.

ATTACHMENT - 6 -

NOTICE OF PENALTY OR LIQUIDATED DAMAGES INCURRED AND DEMAND FOR PAYMENT	Case Number Port Name and Code Investigation File No
TO:	

DEMAND IS HEREBY MADE FOR PAYMENT OF $_____, representing ☐ Penalties or ☐ Liquidated Damages assessed against you for violation of law or regulation, or breach of bond, as set forth below.

FAILURE TO FILE ENTRY SUMMARY TIMELY

The entry summary for entry number _____ was due on _____. It was filed and accepted on _____, or _____ days late. You may choose one of the following options in order to obtain mitigation of this demand:

1. You may pay _____ within 60 days of the date of this notice upon receipt of which the demand for liquidated damages will be cancelled. This payment is made in lieu of filing a petition and constitutes a waiver of the right to file a petition.

2. You may petition for relief as specified below. You should petition only when you believe that additional relief from that provided in Option 1 is warranted and can be substantiated.

(continue facts on reverse)

LAW OR REGULATION VIOLATED	BOND BREACHED		
DESCRIPTION OF BOND (if any)	Form Number	Amount $	Date
Name and Address of Principal in Bond			
Name and Address of Surety on Bond			Surety Identification No.

If you feel there are extenuating circumstances, you have the right to object to the above action. Your petition should explain why you should not be penalized for the cited violation. Write the petition as a letter or in legal form; submit in (duplicate) (triplicate), addressed to the Commissioner of Customs, and forward to the District Director of Customs at _____

Unless the amount herein demanded is paid or a petition for relief is filed with the District Director of Customs within 60 days from the date hereof, further action will be taken in connection with your bond or the matter will be referred to the United States Attorney.

Signature: By:	Title	Date

DEPARTMENT OF THE TREASURY
U.S. CUSTOMS SERVICE
23.11, 23.29, C.M.

Customs Form 5955-A (10-9-73)

U.S. Customs Service

Proposed Rulemaking

(19 CFR Part 101)

General Provisions

Proposed change in field organization of the Customs Service

AGENCY: U.S. Customs Service, Department of the Treasury.

ACTION: Proposed rule.

SUMMARY: This notice proposes to change the field organization of the Customs Service by consolidating the Customs districts of Houston, Galveston, and Port Arthur, Tex., under the Houston district and by consolidating the Galveston and Houston ports of entry in the new Houston district. The proposed consolidation of the Customs districts would significantly reduce administrative salaries and expenses without impairing services to area businesses or the general public. The proposed consolidation of the ports of entry would result in simplified vessel entry and clearance procedures, fewer penalties for vessels failing to comply with these procedures, reduced overtime expenses, and reduced paperwork for all parties involved. The proposed change is part of Customs continuing program to obtain more efficient use of its personnel, facilities, and resources, and to provide better service to carriers, importers, and the public.

DATES: Comments must be received on or before (60 days from the date of publication in the Federal Register).

ADDRESS: Comments (preferably in triplicate) may be addressed to the Commissioner of Customs, attention: Regulations and Information Division, U.S. Customs Service, 1301 Constitution Avenue NW., Washington, D.C. 20229.

FOR FURTHER INFORMATION CONTACT: Renee DeAtley, Office of Inspection, U.S. Customs Service, 1301 Constitution Avenue NW., Washington, D.C. 20229; 202–566–8157.

SUPPLEMENTARY INFORMATION:

BACKGROUND

As part of a continuing program to obtain more efficient use of its personnel, facilities, and resources, and to provide better service to carriers, importers, and the public, the Customs Service proposes to consolidate the Houston, Galveston, and Port Arthur, Customs districts.

Inasmuch as the three districts are located near one another and perform similar services, it is estimated that the proposed consolidation would significantly reduce administrative salaries and expenses without impairing Customs ability to provide services to area businesses or the general public. In addition, Customs brokers currently licensed in one of the affected districts would be considered licensed in the other districts.

Vessels moving between Galveston and Houston must now enter and clear Customs at both ports of entry as required by 19 U.S.C. 1443 and 1444. The proposed consolidation of the port would allow vessels to enter and move between various locations along the 43-mile stretch of the channel between Galveston and Houston by entering and clearing at either port.

In addition, merchandise unladen at Galveston destined for Houston now must be shipped in-bond, requiring an entry at Galveston before it can be moved. Under the single-port concept, the merchandise could arrive at Galveston, be shipped to Houston without bond and entered for Customs purposes at Houston. An importer also could make entry at Houston and pick up merchandise at Galveston.

It is anticipated that the proposed consolidation also would reduce penalties incurred if carriers fail to enter and properly clear merchandise being shipped between Galveston and Houston; reduce overtime because carriers frequently travel between the ports outside normal business hours; and reduce paperwork for carriers, importers, and Customs because ot the reduction of penalty cases and after hour entries. As consolidated, the new Houston district limits would encompass:

> That part of the State of Texas lying south of latitude 32° N., and east of longitude 97° W., including the area from Sabine Pass north along the State line to the north boundary line of Shelby County; west to the Neches River; down the western shore of the Neches River to the north boundary of Jefferson County; westerly along that boundary to the easy boundary of Liberty County; south to the Gulf of Mexico; also the counties of Galveston, Matagorda, Chambers, Calhoun, Refugio, Brazoria, San Patricio, Nueces, and Aransas in the State of Texas and the parishes of Cameron and Calcasieu in the State of Louisiana.

The following ports of entry would be included in the Houston District:

Houston-Galveston, Beaumont, Orange, Port Arthur, Sabine, Port Bolivar, Texas City, Corpus Christi, Freeport, and Port Lavaca-Point Comfort, Texas; and Lake Charles, Louisiana.

The port limits for the consolidated port of Houston-Galveston would encompass:

All of the territory within the corporate limits of the city of Houston; the territory embracing Harris County lying east of the corporate limits of Houston, bounded on the north by Crosby Road, and on the south by Clear Creek, and Clear Lake; and Galveston, Tex., including Port Bolivar and Texas City, all in the State of Texas.

If the proposed change is adopted, the list of Customs regions, districts, and ports of entry in section 101.3(b), Customs Regulations (19 CFR 101.3(b)), would be amended accordingly.

COMMENTS

Before adopting this proposal, consideration will be given to any written comments submitted to the Commissioner of Customs. Comments submitted will be available for public inspection in accordance with section 103.8(b), Customs Regulations (19 CFR 103.8(b)), on regular business days between the hours of 9 a.m. and 4:30 p.m. at the Regulations and Information Division, room 2426, Headquarters, U.S. Customs Service, 1301 Constitution Avenue NW., Washington, D.C. 20229.

AUTHORITY

This change is proposed under the authority vested in the President by section 1 of the Act of August 1, 1914, 38 Stat. 623, as amended (19 U.S.C. 2), and delegated to the Secretary of the Treausry by Executive Order No. 10289, September 17, 1951 (3 CFR 1949–1953 Comp., ch. II), and pursuant to authority provided by Treasury Department Order No. 101–5 (44 F.R. 31057).

DRAFTING INFORMATION

The principal author of this document was James A. Seal, Regulations and Information Division, Office of Regulations and Rulings, U.S. Customs Service. However, personnel from other Customs offices participated in its development.

Dated: November 28, 1980.

RICHARD J. DAVIS,
Assistant Secretary of the Treasury.

[Published in the Federal Register, Dec. 16, 1980 (45 F.R. 82665)]

United States Court of International Trade

One Federal Plaza

New York, N.Y. 10007

Chief Judge

Edward D. Re

Judges

Paul P. Rao
Morgan Ford
Scovel Richardson
Frederick Landis
James L. Watson
Herbert N. Maletz
Bernard Newman
Nils A. Boe

Senior Judge

Samuel M. Rosenstein

Clerk

Joseph E. Lombardi

Decisions of the United States Court of International Trade

Abstracts

Abstracted Protest Decisions

DEPARTMENT OF THE TREASURY,
December 1, 1980.

The following abstracts of decisions of the United States Court of International Trade at New York are published for the information and guidance of officers of the Customs and others concerned. Although the decisions are not of sufficient general interest to print in full, the summary herein given will be of assistance to Customs officials in easily locating cases and tracing important facts.

ROBERT E. CHASEN,
Commissioner of Customs.

DECISION NUMBER	JUDGE & DATE OF DECISION	PLAINTIFF	COURT NO.	ASSESSED	HELD	BASIS	PORT OF ENTRY AND MERCHANDISE
				Par. or Item No. and Rate	Par. or Item No. and Rate		
P80/183	Richardson, J. November 25, 1980	F. W. Myers & Co., Inc.	73-1-00290-S1	Item 608.05 0.3¢ per lb.	Item 608.02 Duty free	F.W. Myers & Co., Inc. v. U.S. (C.D. 4635)	Detroit Sponge iron powders
P80/184	Richardson, J. November 25, 1980	F. W. Myers & Co., Inc.	75-8-01975-S1	Item 608.05 0.3¢ per lb.	Item 608.02 Free of duty	F. W. Myers & Co., Inc. v. U.S. (C.D. 4635)	Champlain-Rouses Point (Ogdensburg) Sponge iron powders
P80/185	Newman, J. November 25, 1980	Chartpak, Inc.	76-9-02139	Item 409.00 3.5¢ per lb. plus 22.5%	Item 474.26 2%	Agreed statement of facts	Boston Silk screen inks
P80/186	Newman, J. November 25, 1980	Koni Photo Corp.	74-3-00736	Item 722.34 10%	Item 722.75 4.5%	Atlas Rand Keystone, d/o Berkey Photo, Inc., et al. v. U.S. (Abs. P80/77)	New York Photographic light meters and photographic meter assemblies
P80/187	Newman, J. November 25, 1980	Nippon Kogaku (USA), Inc.	78-10-01866	Item 722.10 12.5%	Item 722.16 9%	Consent judgment	Chicago Photographic cameras and lenses

Decision of the United States Court of International Trade

Abstracts

Abstracted Reappraisement Decisions

DECISION NUMBER	JUDGE & DATE OF DECISION	PLAINTIFF	COURT NO.	BASIS OF VALUATION	HELD VALUE	BASIS	PORT OF ENTRY AND MERCHANDISE
R80/344	Newman, J. November 25, 1980	Gehrig, Hoban & Co., Inc.	R68/17295, etc.	United States value	Determined by adding to f.o.b. unit invoice price in Swiss francs converted to a dollar value at rate of exchange in effect at time of entry (the "claimed value"). 53 % of difference between claimed value and appraised value	Agreed statement of facts	New York Machine tools and accessories and parts thereof

Recent Unpublished Customs Service Decisions

The following listing of recent administrative decisions issued by the Office of Regulations and Rulings, U.S. Customs Service, and not otherwise published, is published for the information of Customs officers and the importing community. Although the decisions are not of sufficient general interest to warrant publication as Treasury decisions, the listing describes the issues involved and is intended to aid Customs officers and concerned members of the public in identifying matters of interest which recently have been considered by the Office of Regulations and Rulings.

A copy of any decision included in this listing, identified by its date and file number, may be obtained in a form appropriate for public distribution upon written request to the Office of Regulations and Rulings, Attention: Legal Reference Area, Room 2404, U.S. Customs Service, 1301 Constitution Avenue NW., Washington, D.C. 20229. These copies will be made available at a cost to the requester of 10 cents per page. However, the Customs Service will waive this charge if the total number of pages copied is 10 or less.

Decisions listed in earlier issues of the CUSTOMS BULLETIN, through July 2, 1980, are available in microfiche format at a cost of $23.85 (15 cents per sheet of fiche). It is anticipated that additions to the microfiche will be made quarterly and subscriptions are available. Requests for the microfiche now available and for subscriptions should be directed to the Legal Reference Area. Subscribers will automatically receive updates as they are issued and will be billed accordingly.

Dated: December 8, 1980.

B. J. FRITZ
Director,
Regulations & Information Division.

Date of decision	File No.	Issue
11-24-80	104454	Vessel repair: Remission of duties on cost of repairs to LAHS barges denied
11-13-80	104831	Instruments of international traffic: 16-millimeter film
11-17-80	104892	Foreign aircraft: Whether route of aircraft would violate 49 U.S.C. 1508(b), and whether permit to proceed under section 6.2(d)(1) is applicable
11-17-80	104904	Vessels: Boats made of fiberglass, used primarily for commercial fishing, also for pleasure purposes
11-17-80	104905	Vessels: Whether foreign-built yacht admitted duty free under 812.30, remains exempt from duty for remainder of stay in United States regardless of subsequent ownership
11-10-80	104915	Carrier control: Transporting passengers between ports who will assist in seminar on board vessel
11-14-80	104943	Vessel repair: Dutiability under 19 U.S.C. 1466 of cost of hull brushing performed on vessel
11-26-80	712923	Marking: Country-of-origin marking on brushes
11-19-80	713419	Marking: Marking country of origin required on dental products
9-16-80	060846	Classification: Reconsideration of catalysts (417.12)
10-24-80	061514	Classification: Trays for trainer plants (666.00)
11-14-80	061834	American selling price: Hip waders with nylon bands (700.60)
11-26-80	061970	American selling price: Ladies' sandals (700.60)
10-17-80	062918	Classification: Various products produced for excavating and machinery used in construction industry (664.08, 649.43)
10-30-80	062998	Classification: Emblem badges used on automobiles (652.75)
10-23-80	063940	Classification: Microwave oven radiation detector (772.15, 799.00)
10-16-80	064160	Classification: Coats (380.00, 380.12, 380.84)
10-30-80	064174	Classification: Printed paper designed for wedding or birth announcements (274.00, 274.05)
10-21-80	064486	Classification: Body supporting garment (376.28)
10-30-80	064564	Classification: "English style" riding breeches (382.81, 380.84)
10-22-80	064582	Classification: Swiss army sports shirt (380.27)
11- 6-80	064925	Classification: Paint and putty products (408.48, 409.18, 493.10, 413.51)
9- 8-80	064988	Classification: Men's woven long sleeve shirt (380.04)
11-25-80	065042	Classification: Leather upper portions which will be assembled into men's moccasin-style loafers after importation (791.28)
9- 3-80	065059	Classification: Copper-clad epoxy laminated sheets (774.60, 774.55)
10-24-80	065154	Classification: Whether labels on jeans are considered ornamentation
10-10-80	065168	Classification: Carbide tipped scabbler tips (649.43, 674.50)

Date of decision	File No.	Issue
10-10-80	065286	Classification: Japanese-made tires and hubs for model airplane builders (737.95, 774.25)
10-24-80	065307	Classification: Interpretation of General Headnote 6(b)(i), TSUS, relating to metal boxes containing candy or cookies (653.90)
11-14-80	065328	Classification: Whether certain label constitutes ornamentation
11-14-80	065354	Classification: Plastic footwear (700.53)
10- 9-80	065363	Classification: Stepper motor with lead screw for use as component for magnetic disk read/write unit (682.25)
9- 7-80	066033	Classification: Plastic Christmas ornaments (773.10, 772.97)
11-26-80	066068	Classification: Imported components used in assembly of tractor (664.08)
11-13-80	066280	Classification: Hormones diethylstilbestrol diphosphate (412.50)
11-20-80	066288	Classification: Unbleached cotton fabric used to wrap surgical instruments (386.50)
11-20-80	066292	Classification: Plastic bag used in the manufacture of medical waterbeds (772.42)
11-13-80	066305	Classification: Imidozolidyinyl urea, a nonbenzenoid amide (425.22)
10-24-80	066308	Classification: Phenyl acetic acid, methyl phenyl acid, methyl phenyl acetate (404.24, 413.28, 405.60)
11-20-80	066332	Classification: Metal halide printing down lamps (772.94)
10-30-80	066342	Classification: Novelty toy (737.95)
11-13-80	066406	Classification: Iron alloy powder treated with cyclohexanone (606.62)
11-20-80	066430	Classification: Sun visor hat and plastic keyring (772.30, 740.38)
11-14-80	066501	Classification: Ladies' "Bikini" sandal (700.58, 700.60)
10-24-80	066525	American selling price: Women's footwear with woven fabric upper and plastic sole (700.60)
11-14-80	066531	Classification: Flight simulators and parts (678.48, 676.15, 676.30, 676.52)
10-30-80	066533	Classification: Woven wood fabric (357.15, 336.60)
10-23-80	066575	American selling price: Men's footwear with canvas upper and polyurethane sole (700.60)
11-20-80	066690	Classification: Aluminum casings (706.50, 706.55, 657.40)
10-30-80	066742	Classification: Picnic table, hobby bench kit, garden shed kit (727.35, 207.00)
10-30-80	066744	Classification: Stand used to rest household pressing irons (654.01)
10-23-80	066750	Classification: Double-frustom-shape steel sleeve (657.25)
11-20-80	066987	Classification: U.S. drilling pipe returned without being advanced in value entitled duty-free entry

International Trade Commission Notices

Investigations by the U.S. International Trade Commission

DEPARTMENT OF THE TREASURY,
December 11, 1980

The appended notices relating to investigations by the U.S. International Trade Commission are published for the information of Customs Officers and others concerned.

R. E. CHASEN,
Commissioner of Customs.

In the Matter of CERTAIN AIRLESS PAINT SPRAY PUMPS AND COMPONENTS THEREOF	Investigation No. 337-TA-90

Designation of Commission Investigative Attorney

Mr. Samuel Bailey is hereby designated as Commission investigative attorney in the above captioned investigation, effective this date. The Secretary is requested to publish this notice in the Federal Register.

November 28, 1980.

TALBOT S. LINDSTROM, *Chief,*
Unfair Import Investigations Division.

In the Matter of CERTAIN SPRING ASSEMBLIES AND COMPONENTS THEREOF, AND METHODS OF THEIR MANUFACTURE	Investigation No. 337-TA-88

Notice to All Parties

Notice is hereby given that a prehearing conference will be held in this case at 9 a.m. on January 16, 1981, in the Dodge Center, room 201, 1010 Wisconsin Avenue NW., Washington, D.C.

Notice is also given that the hearing in this proceeding will commence at 9 a.m. on February 2, 1981, in the Dodge Center, room 201, 1010 Wisconsin Avenue NW., Washington, D.C.

The Secretary shall publish this notice in the Federal Register.

Issued: December 2, 1980.

JANET D. SAXON,
Administrative Law Judge.

Analysis of Comments and Notice of Withdrawal of Proposed Rule on Country-of-Origin Marking

AGENCY: U.S. International Trade Commission.

ACTION: The U.S. International Trade Commission hereby withdraws the proposed rule on country-of-origin marking of imported steel wire rope which is sold, offered for sale, or distributed in the United States. A notice of the proposed rule was published for public comment in the Federal Register of February 27, 1980 (45 F.R. 12833)

EFFECTIVE DATE: December 2, 1980.

FOR FURTHER INFORMATION CONTACT: Jack Simmons, Esq., Office of the General Counsel, telephone 202–523–0493.

SUPPLEMENTARY INFORMATION:

BACKGROUND

The present rulemaking procedure arises from a petition filed by the Committee of Domestic Steel Wire Rope and Specialty Cable Manufacturers (Committee), Kenosha, Wis. The petition alleged mismarkings and failure to mark the country of origin of imported steel wire rope being sold or offered for sale or distribution in the United States. The Committee requested that the International Trade Commission issue a rule, defining as an unfair act and method of competition, within the meaning of section 337 of the Tariff Act of 1930 (19 U.S.C. 1337, hereinafter section 337), the failure to disclose the country of origin of imported steel wire rope which is sold or offered for sale or distribution in the United States. The Committee alleged that there is a preference for domestic steel wire rope, and that proper labeling would permit final users to make a knowledgeable selection in the marketplace.

The Commission conducted an informal inquiry into those allegations, during which several instances of possible mismarking or failure to mark imported steel wire rope were brought to its attention. Thereupon, the Commission published for public comment in the

Federal Register of February 27, 1980, a proposed rule on country-of-origin marking of steel wire rope (45 F.R. 12833). The period for public comment has now expired.

SUMMARY OF COMMENTS RECEIVED

Most comments addressed the policy, the advisability, and the legality of the proposed rule, rather than the drafting of the rule itself.

The majority of comments received addressed the need for the rule itself. Of the comments opposed to the rule, the most prevalent was that there is no consumer preference for domestically produced steel wire rope. Several of these comments also stated that the proposed rule discriminates against importers and that it is blatant protectionism. Several comments also argued that the alleged unfair practices are dealt with under existing Federal law. Those comments which favored the proposed rule argued that there is a preference for domestic steel wire rope and that mismarking or failure to mark distorts the market.

Several comments argued that the proposed rule may be inconsistent with article III, paragraph 4, of the General Agreements on Tariffs and Trade (GATT), the national treatment clause. Other comments argued that this reasoning is unpersuasive for two reasons. First, article IX, paragraph 4, specifically permits countries to impose country-of-origin marking requirements. Second, the Protocol of Provisional Application, by which the GATT came into force, states that its provisions shall be applied in a manner not inconsistent with existing legislation.

Several comments also suggested that the proposed rule would create a nontariff barrier. Other comments argued that since the marking requirements would impose minimal costs on those who deal in imported steel wire rope, the proposed rule does not appear to be inconsistent with the less favorable treatment clause of the GATT, article III.

Several comments argued that the proposed rule would conflict w th the so-called J list. 19 CFR 134.33. Section 304 of the Tariff Act of 1930 (19 U.S.C. 1304), on which the J list is based, requires country-of-origin labeling on either the product itself or on its container in such form that the ultimate purchaser can discern the country of origin of the product. Several comments argued that the proposed rule does not conflict with this provision, and remedies which it could provide for a violation of the rule are different from those available to the U.S. Customs Service. Therefore, they reasoned that the proposed rule is complementary to Customs practice.

Several comments argued that the proposed rule would follow products further through the stream of commerce than the J list. Other comments argued that if the Commission construes the phrase ultimate consumer as used in the rule to mean exactly the same as the term ultimate purchaser used in Customs J list regulations, there would be no inconsistency.

Several comments stated that most domestic producers of steel wire rope identify their products by a registered trademark. They argued that section 526 of the Tariff Act of 1930 (19 U.S.C. 1526) provides for the seizure and forfeiture of merchandise which violates a trademark. Other comments noted, however, that this provision is not applicable where imported wire rope bears no trademark.

Several comments argued that the Commission has no authority to promulgate substantive rules, and that section 335 of the Tariff Act of 1930 (19 U.S.C. 1335) provides authority for procedural rules only. They further argued that *National Petroleum Refiners* v. *Federal Trade Commission*, 482 F. 2d 672 (D.C. Cir. 1973), relied upon by the Commission, is inapposite. Other comments, however, argued that, based on the language of section 335, the Commission has the power to issue and enforce the proposed rule, and that *National Petroleum Refiners* is authority for that proposition.

Several comments argued that before a violation of section 337 can be found, all the elements of section 337(a) must be found to exist by the Commission. They argued that to issue a rule under current circumstances would be to presume, without determining, the truth of the allegations regarding these elements. Comments in favor of the rule conceded that these elements must be found and urged the Commission to proceed with its determination in the rulemaking context.

The Commission notes that it has little experience in dealing with allegations of mismarking or failure to mark as an unfair act or method of competition. Comments have demonstrated much controversy over the appropriate scope of the proposed proscribed unfair acts. Given this controversy as well as the necessity of the Commission's making determinations of injury and economic and efficient operation, it has become apparent to the Commission that a rulemaking proceeding would offer few advantages in this case. As such, the Commission believes that better practice would be to treat these allegations under normal section 337 adjudicatory procedures. Especially in an area involving basically unfamiliar alleged unfair acts, using normal adjudicatory proceedings not only would provide greater procedural rights to the parties but would develop a more thorough record for the Commission. Finally, the Commission notes that going forward with a rulemaking proceeding would save no Commission resources, since a full-scale investigation would be required under either a section 33

rulemaking proceeding or a conventional adjudication. In fact, since the comments have demonstrated that findings on all statutory elements would be required in a rulemaking proceeding, and since new procedures would need to be adopted to enable the Commission to make such findings in a rulemaking context, it appears that the use of rulemaking would be more burdensome than adjudication.

CONCLUSIONS

On the basis of the comments received and the analysis made, the novelty of the alleged unfair act, the Commission's desire to afford the parties a full and fair opportunity to ventilate all issues, and the fact that rulemaking would not save Commission resources, the Commission has determined to withdraw the proposed rule.

PUBLIC INSPECTION: All comments received from the public are available for public inspection in the Office of the Secretary, U.S. International Trade Commission, 701 E Street NW., Washington, D.C. 20436, during normal business hours.

By order of the Commission.

Issued: December 3, 1980.

KENNETH E. MASON,
Secretary.

Index

U.S. Customs Service

	T. D. No.
Treasury Decisions:	
Carriers bonds	80-290
White or Irish potatoes, other than certified seed—tariff rate quota	80-291
Foreign currencies:	
Daily certified rates; November 24-28, 1980	80-292
Rates which varied from quarterly rate; November 24-28, 1980	80-293
Air carrier blanket bonds	80-294
Cotton and manmade fiber textile products—restriction on entry if manufactured or produced in the Dominican Republic	80-295
Synopses of drawback decisions:	
API tubing and pup joints	80-296-A
Forklift trucks, attachments, assemblies and parts	80-296-B
Service station gasoline pumps and barrel pumps for other petroleum products	80-296-C
Endoscopes; replacement parts	80-296-D
Pesticides	80-296-E
Teleprinters and parts and subassemblies	80-296-F
Piece goods, embossed	80-296-G
Flow transducers	80-296-H
Fabric, greige circular knitted	80-296-I
Passenger cars; trucks and finished parts	80-296-J
Skis	80-296-K
Circuit boards	80-296-L
Satellites	80-296-M
Cableway tractor	80-296-N
Silk wearing apparel	80-296-O
Carbonless paper	80-296-P
Bottles, glass	80-296-Q
Chippers, barkers, complete fixed and mobile mills	80-296-R
T-shirts, short sleeve	80-296-S
Film packs	80-296-T
Drink bases, dry beverage powdered	80-296-U
Movements, dialed	80-296-V
Roller mills and finished rolls	80-296-W
Titanium alloy mill products	80-296-X
Titanium sheet, wire rods and other semi-finished forms	80-296-Y
Plywood doorskins	80-296-Z
Water heaters, hot	80-297-A
Tubing, steel plate, sheets, and coils	80-297-B
Steel fasteners, mainly rods, stud, and bolts	80-297-C
Titanium products	80-297-D

Synopses of drawback decisions—Continued
Metal stampings, circles etc. 80-297-E
Resins, solid epoxy and solutions 80-297-F
Fenarimol (Rubigan) 80-297-G
Nuarimol (Trimidal) 80-297-H
Antiknock compound, motor fuel 80-297-I
Batteries 80-297-J
Farm equipment and machinery 80-297-K
Wire, wire stranded together 80-297-L
Exhaust systems 80-297-M
Insulators, high voltage 80-297-N
Steel wire, drawn, rod and bar 80-297-O
Fiberglass fabrics 80-297-P
Shock absorbers, exhaust systems 80-297-Q
Stainless steel sheets, polished and cut to specs 80-297-R
Magazines 80-297-S
Water heaters, hot 80-297-T
Steel sheet, strip 80-297-U
Silos, grain 80-297-V
Metal containers 80-297-W
Fruits, canned; fruit cocktail 80-297-X
Ethyl tellurac 80-297-Y
Wool, sorted and/or graded and other wool products 80-297-Z
Guidelines for disposition of violations of the timely entry summary filing requirements 80—298

Item 950-D T 1.11/3:14/53
for contin
333-197
378

Customs Bulletin

Regulations, Rulings, Decisions, and Notices concerning Customs and related matters

and Decisions

of the United States Court of Customs and Patent Appeals and the United States Court of International Trade

Vol. 14 DECEMBER 31, 1980 No. 53

9247

This issue contains

T.D. 80–299 through 80–306
General Notice
C.A.D. 1256
Slip Op. 80–7 through 80–9
Reap. abstracts R80/345 through R80/381
International Trade Commission Notices

THE DEPARTMENT OF THE TREASURY
U.S. Customs Service

NOTICE

The abstracts, rulings, and notices which are issued weekly by the U.S. Customs Service are subject to correction for typographical or other printing errors. Users may notify the U.S. Customs Service, Logistics Management Division, Washington, D.C. 20229, of any such errors in order that corrections may be made before the bound volumes are published.

For sale by the Superintendent of Documents, U.S. Government Printing Office, Washington, D.C. 20402. Price: $2.25 (single copy domestic); $2.85 (single copy foreign). Subscription price: $85.00 a year domestic; $106.25 a year foreign.

U.S. Customs Service

Treasury Decisions

(T.D. 80–299)

Bonds

Approval and discontinuance of carriers bonds, Customs form 3587

Bonds of carriers for the transportation of bonded merchandise have been approved or discontinued as shown below. The symbol "D" indicates that the bond previously outstanding has been discontinued on the month, day, and year represented by the figures which follow. "PB" refers to a previous bond, dated as represented by figures in parentheses immediately following, which has been discontinued. If the previous bond was in the name of a different company or if the surety was different, the information is shown in a footnote at the end of the list.

Dated: December 11, 1980.

Name of principal and surety	Date of bond	Date of approval	Filed with district director/area director/amount
American Pacific Container Line, Inc., 501 Army St., San Francisco, CA; water carrier; The Continental Ins. Co.	Aug. 21, 1980	Aug. 21, 1980	San Francisco, CA $50,000
Brada Miller Freight System, Inc., 1210 S. Union St., Kokomo, IN; motor carrier; American Druggists' Ins. Co. D 11/7/80	Apr. 27, 1977	May 13, 1977	Cleveland, OH $75,000
Bristow Trucking Co., Inc., P.O. Box 6355-A, 750 Clow Rd., Birmingham, AL; motor carrier; Ins. Co. of North America	Aug. 25, 1980	Nov. 6, 1980	Mobile, AL $25,000
Elder & Co., Inc., Ft. Lauderdale, FL; motor carrier; The Aetna Casualty & Surety Co.	Jan. 15, 1980	Jan. 15, 1980	Miami, FL $25,000
Gordon's Transports, P.O. Box 59, Memphis, TN; motor carrier; Fidelity & Deposit Co. of MD (PB 10/23/69) D 10/23/80 [1]	Oct. 23, 1980	Oct. 23, 1980	New Orleans, LA $25,000
F. W. Groves Trucking Co., Inc., Route 4, Box 89, Leland, NC; motor carrier; Western Surety Co.	Oct. 21, 1980	Nov. 12, 1980	Wilmington, NC $25,000

See footnote at end of table.

Name of principal and surety	Date of bond	Date of approval	Filed with district director/area director/amount
Hamilton Trucking Co. of Oklahoma, Inc., 12612 E. Admiral Place, Tulsa, OK; motor carrier; National Surety Corp. (Ill.)	Oct. 1, 1980	Oct. 16, 1980	Dallas/Fort Worth, TX $25,000
Hemingway Transport, Inc., 438 Dartmouth St., New Bedford, MA; motor carrier; Insurance Co. of North America (PB 10/11/78) D 10/24/80 [2]	Oct. 11, 1980	Oct. 24, 1980	Boston, MA $50,000
Toby Martin Oilfield Trucking Inc., P.O. Box PP, Crosby, TX; motor carrier; Washington International Ins. Co.	Nov. 3, 1980	Nov. 4, 1980	Houston, TX $25,000
Mid-Continent Delivery, Inc., 10201 N. Everton Ave., Kansas City, MO; motor carrier; Peerless Ins. Co.	Sept. 22, 1980	Oct. 31, 1980	St. Louis, MO $50,000
Parkhill Truck Co., P.O. Box 113, Joplin, MO; motor carrier; State Surety Co. D 10/30/80	Nov. 24, 1969	Dec. 8, 1969	St. Louis, MO $25,000
Pilot Air Freight Corp., Philadelphia International Airport, Philadelphia, PA; motor carrier; St. Paul Fire & Marine Ins. Co.	Aug. 26, 1980	Oct. 29, 1980	Philadelphia, PA $50,000
Reddaway's Truck Lines, Inc., 1721 NW Northrup, Portland, OR; motor carrier; Fireman's Fund Ins. Co. (PB 7/22/77) D 10/1/80 [3]	Oct. 1, 1980	Oct. 1, 1980	Portland, OR $25,000
Sioux City & New Orleans Barge Lines, Inc. & SCNO Barge Lines, Inc. & SCNO Terminal Corp., 12680 Olive St. Rd., St. Louis, MO; water carrier; The Aetna Casualty & Surety Co. (PB 1/13/75) D 9/2/80 [4]	Sept. 2, 1980	Sept. 2, 1980	St. Louis, MO $100,000
Summit Airlines, Inc., Phila. Int'l Airport, Phila, PA; air carrier; Fidelity & Deposit Co. of MD	Nov. 4, 1980	Nov. 4, 1980	Philadelphia, PA $25,000
Tanney's Motor Transportation, Inc., 10 Northway Lane, P.O. Box 610, Latham, NY; motor carrier; St. Paul Fire & Marine Ins. Co. D 10/28/80	Dec. 2, 1977	Apr. 20, 1978	New York Seaport $50,000
Todd Transportation Co., 500 First National Bank Bldg., Covington, KY; motor carrier; Washington International Ins. Co.	Oct. 13, 1980	Nov. 5, 1980	Cleveland, OH $50,000
Transcon Lines, 101 Continental Blvd., El Segundo, CA; motor carrier; The Aetna Casualty & Surety Co. (PB 9/25/68) D 10/30/80 [5]	Sept. 1, 1980	Oct. 31, 1980	Los Angeles, CA $50,000
Williamson Transportation Inc., 130 Lenox Ave., Stamford, CT; motor carrier; St. Paul Fire & Marine Ins. Co.	Oct. 29, 1980	Oct. 31, 1980	Bridgeport, CT $50,000
Walt Wilson Trucking Inc., 5500 Redwood Hwy, Petaluma, CA; motor carrier; The Continental Ins. Co. (PB 4/10/80) D 10/31/80	Oct. 16, 1980	Oct. 31, 1980	San Francisco, CA $50,000

See footnotes at end of table.

Name of principal and surety	Date of bond	Date of approval	Filed with district director/area director/amount
R. F. Westbury, P.O. Box 498, Sandston, VA; motor carrier; Fireman's Ins. Co. of Newark, NJ	Oct. 14, 1980	Oct. 29, 1980	Norfolk, VA $25,000
Clarence Wyatt Transfer, Inc., 716 E. 7th St., Richmond, VA; motor carrier; Hartford Accident & Indemnity Co.	June 17, 1980	Oct. 14, 1980	Norfolk, VA $25,000

[1] Surety is Federal Ins. Co.
[2] Surety is Continental Casualty Co.
[3] Surety is Mid-Century Ins. Co.
[4] Principal is Sioux City & New Orleans Barge Lines, Inc.
[5] Surety is Ins. Co. of North America.

BON-3-03

MARILYN G. MORRISON,
Director,
Carriers, Drawback and Bonds Division.

(T.D. 80-300)

Foreign Currencies—Daily Rates For Countries Not on Quarterly List

Rates of exchange based on rates certified to the Secretary of the Treasury by the Federal Reserve Bank of New York for the Brazil cruzeiro, People's Republic of China yuan, Hong Hong dollar, Iran rial, Philippines peso, Singapore dollar, Thailand baht (tical), and Venezuela bolivar

The Federal Reserve Bank of New York, pursuant to section 522(c), Tariff Act of 1930, as amended (31 U.S.C. 372(c)), has certified buying rates for the dates and foreign currencies shown below. The rates of exchange, based on these buying rates, are published for the information and use of Customs officers and others concerned pursuant to part 159, subpart C, Customs Regulations (19 CFR 159, subpart C).

Brazil cruzeiro:	
December 1-5, 1980	$0.0160
People's Republic of China yuan:	
December 1, 1980	$0.652358
December 2-5, 1980	.649140
Hong Kong dollar:	
December 1, 1980	$0.195389
December 2, 1980	.195676
December 3, 1980	.195733
December 4, 1980	.195637
December 5, 1980	.195008
Iran rial:	
December 1-5, 1980	Not available

Philippines peso:	
December 1-5, 1980	$0. 1324
Singapore dollar:	
December 1, 1980	$0. 474608
December 2, 1980	. 474834
December 3, 1980	. 475624
December 4, 1980	. 475851
December 5, 1980	. 475624
Thailand baht (tical):	
December 1-5, 1980	$0. 0485
Venezuela bolivar:	
December 1-5, 1980	$0. 2329

(LIQ-3-01 O:C:E)

Date: December 5, 1980.

GWENN KLEIN KIRSCHNER,
Acting Chief,
Customs Information Exchange.

(T.D. 80-301)

Foreign Currencies—Variances from Quarterly Rate

The following rates of exchange are based upon rates certified to the Secretary of the Treasury by the Federal Reserve Bank of New York, pursuant to section 522(c), Tariff Act of 1930, as amended (31 U.S.C. 372(c)), and reflect variances of 5 per centum or more from the quarterly rate published in T.D. 80-249 for the following countries. Therefore, as to entries covering merchandise exported on the dates listed, whenever it is necessary for Customs purposes to convert such currency into currency of the United States, conversion shall be at the following rates.

Austria schilling:	
December 1, 1980	$0. 072411
December 2, 1980	. 072622
December 3-4, 1980	. 072569
December 5, 1980	. 071942
Belgium franc:	
December 1, 1980	$0. 032103
December 2, 1980	. 032020
December 3, 1980	. 032082
December 4, 1980	. 032031
December 5, 1980	. 031746

Denmark krone:	
December 1, 1980	$0. 168025
December 2, 1980	. 167659
December 3, 1980	. 167785
December 4, 1980	. 167687
December 5, 1980	. 166528
France franc:	
December 1, 1980	$0. 222173
December 2, 1980	. 221484
December 3, 1980	. 222222
December 4, 1980	. 222124
December 5, 1980	. 220459
Germany deutsche mark:	
December 1, 1980	$0. 515331
December 2, 1980	. 513347
December 3, 1980	. 515597
December 4, 1980	. 514536
December 5, 1980	. 509944
Ireland pound:	
December 1, 1980	$1. 9200
December 2, 1980	1. 9170
December 3, 1980	1. 9200
December 4, 1980	1. 9190
December 5, 1980	1. 8970
Italy lira:	
December 1–3, 1980	$0. 001086
December 4, 1980	. 001084
December 5, 1980	. 001075
Netherlands guilder:	
December 1, 1980	$0. 475511
December 2, 1980	. 474496
December 3, 1980	. 475624
December 4, 1980	. 475059
December 5, 1980	. 470699
Norway krone:	
December 5, 1980	$0. 194932
Portugal escudo:	
December 1, 1980	$0. 018904
December 2, 1980	. 018957
December 3–4, 1980	Quarterly
December 5, 1980	. 018868

Spain peseta:	
December 1, 1980	$0.012845
December 2, 1980	.012853
December 3–4, 1980	Quarterly
December 5, 1980	.012804
Sri Lanka rupee:	
December 1–5, 1980	$0.058140
Sweden krone:	
December 5, 1980	$0.227402
Switzerland franc:	
December 1, 1980	$0.570613
December 2, 1980	.568990
December 3, 1980	.571265
December 4, 1980	.570939
December 5, 1980	.564493

(LIQ–3–01 O:C:E)

Dated: December 5, 1980.

GWENN KLEIN KIRSCHNER,
Acting Chief,
Customs Information Exchange.

(T.D. 80–302)

Bonds

Approval of authorized facsimile signature; T.D. 79–241 amended

Washington International Insurance Co., Phoenix, Ariz., has requested that the name of John R. Ciago, vice president, be added to list of authorized facsimile signatures published in T.D. 79–241, August 13, 1979, and on file with the Customs Service for use on Customs powers of attorney and Customs bonds upon which it acts as surety.

Washington International Insurance Co. has furnished the Customs Service with a copy of Mr. Ciago's signature and a certified copy of the corporate resolution agreeing to be bound by the facsimile signature.

The name of John R. Ciago, vice president, is hereby added to the list of authorized facsimile signatures on file for Washington International Insurance Co.

(BON–3–01)

Dated: December 15, 1980.

MARILYN G. MORRISON,
Director,
Carriers, Drawback and Bonds Division.

(T.D. 80-303)

Bonds

Approval of a carrier's bond, Customs form 3587

A bond of a carrier for the transportation of bonded merchandise has been approved as shown below. The approval of the bond is temporary until March 15, 1981.

Dated: December 17, 1980.

Name of principal and surety	Date of bond	Date of approval	Filed with district director/area director/amount
Southern Carriers, Inc., 1905 Turning Basin Dr., Houston, TX; motor carrier; Federal Ins. Co.	Nov. 25, 1980	Dec. 2, 1980	Houston, TX $25,000

BON-3-03

MARILYN G. MORRISON,
Director,
Carriers, Drawback and Bonds Division.

(T.D. 80-304)

Customs Approved Public Gauger

Approval of public gauger performing gauging under standards and procedures required by Customs

Notice is hereby given pursuant to the provisions of section 151.43 of the Customs Regulations (19 CFR 151.43) that the application of Johnnie Wilson Inspections, P.O. Box 924, Freeport, Tex. 77541, to gauge imported petroleum and petroleum products in all Customs districts in accordance with the provisions of section 151.43 of the Customs Regulations is approved.

Dated: December 17, 1980.

A. PIAZZA,
Director, Entry Procedures and Penalties Division.

[Published in the Federal Register, Dec. ——, 1980 (45 F.R. ———)]

(T.D. 80-305)

Customs Approved Public Gauger

Approval of public gauger performing gauging under standards and procedures required by Customs

Notice is hereby given pursuant to the provisions of section 151.43 of the Customs Regulations (19 CFR 151.43) that the application of

Mr. C. J. Thibodeaux, 2105 North Palm Court, Pasadena, Tex. 77502, to gauge imported petroleum and petroleum products in the Customs districts of Houston and Galveston, Tex., in accordance with the provisions of section 151.43 of the Customs Regulations is approved.

Dated: December 17, 1980.

A. PIAZZA,
Director, Entry Procedures and Penalties Division.

[Published in the Federal Register, Dec. ——, 1980 (45 F.R. ———)]

(T.D. 80-306)

Customs Approved Public Gauger

Approval of public gauger performing gauging under standards and procedures required by Customs

Notice is hereby given pursuant to the provisions of section 151.43 of the Customs Regulations (19 CFR 151.43) that the application of Bulk Liquid Surveys, Inc., 4646 Parkside Drive, Baltimore, Md. 21206, to gauge imported petroleum and petroleum products in the Customs districts of Delaware and Maryland in accordance with the provisions of section 151.43 of the Customs Regulations is approved.

Dated: December 17, 1980.

A. PIAZZA,
Director, Entry Procedures and Penalties Division.

[Published in the Federal Register, Dec. ——, 1980 (45 F.R. ———)]

U.S. Customs Service

General Notice

(097190)

Notice That the Customs Service is Soliciting Public Comments Concerning the Inclusion of Certain Assist Costs Incurred in the United States as Direct Costs of Processing Operations Under the Generalized System of Preferences

AGENCY: U.S. Customs Service, Department of the Treasury.

ACTION: Notice requesting public comments.

SUMMARY: This document gives notice that the Customs Service is soliciting the public's views on whether certain assist costs incurred in the United States, now excluded from the appraised value of imported merchandise by Public Law 96–39, should continue to be regarded as direct costs of processing operations under section 10.178(a), Customs Regulations, in determining the eligibility of an an article for duty-free treatment under the generalized system of preferences.

DATES: Comments must be received on or before (60 days from the date of publication in the Federal Register).

ADDRESS: Comments should be addressed to the Commissioner of Customs, Attention: Regulations and Research Division, 1301 Constitution Avenue NW., Washington, D.C. 20229.

FOR FURTHER INFORMATION CONTACT: Thomas Lobred, Classification and Value Division, U.S. Customs Service, 1301 Constitution Avenue NW., Washington, D.C. 20229; 202–566–2938.

SUPPLEMENTARY INFORMATION:

BACKGROUND

In accordance with General Headnote 3(c)(ii), Tariff Schedules of the United States (TSUS), and section 10.176(a), Customs Regulations (19 CFR 10.176(a)), an article which is the growth, product, manufacture, or assembly of a beneficiary developing country (BDC) and which is imported into the Customs territory of the United States directly from the BDC may be eligible for duty-free treatment under

the generalized system of preferences if the sum of the cost of materials produced in the BDC plus the direct costs of processing operations performed in the BDC is not less than 35 percent of the appraised value of the article at the time of its entry into Customs territory.

Section 10.178(a), Customs Regulations (19 CFR 10.178(a)), defines direct costs of processing operations as including, among other things, research, development, design, engineering, and blueprint costs insofar as they are allocable to the specific merchandise under consideration. In interpreting this regulation, the Customs Service has ruled that research and development costs incurred in the United States are considered a direct cost of processing operations, provided the research and development relates to the specific merchandise under consideration.

Section 201, Trade Agreements Act of 1979 (Public Law 96–39, 93 Stat. 194), amended section 402, Tariff Act of 1930, in part, to specifically exclude from appraised value assists in the form of engineering, development, artwork, design work, and plans and sketches necessary for the production of imported merchandise if undertaken in the United States. In veiw of this amendment, the question arises whether the cost of these assists incurred in the United States would continue to be treated as a direct cost of processing operations under section 10.178(a), Customs Regulations, if otherwise qualified.

COMMENTS

The Customs Service invites written comments (preferably in triplicate) on whether the cost of assists necessary for the production of imported merchandise, if incurred in the United States, should be treated as a direct cost of processing operations under section 10.178(a), Customs Regulations. All comments received in response to this notice will be available for public inspection in accordance with section 103.8(b), Customs Regulations (19 CFR 103.8(b)), during regular business hours at the Regulations and Research Division, Headquarters, U.S. Customs Service, 1301 Constitution Avenue NW., Washington, D.C. 20229.

DRAFTING INFORMATION

The principal author of this notice was James A. Seal, Regulations and Research Division, Office of Regulations and Rulings, U.S. Customs Service. However, personnel from other offices within the Customs Service participated in its development.

Dated: December 15, 1980.

SALVATORE E. CARAMAGNO
(For Donald W. Lewis, Director,
Office of Regulations and Rulings).

[Published in the Federal Register, Dec. 18, 1980 (45 F.R. 83260)]

Decisions of the United States Court of Customs and Patent Appeals

C.A.D. 1256

PASCO TERMINALS, INC. *v.* THE UNITED STATES OF AMERICA, No. 80–5

1. CLASSIFICATION OF IMPORTS—ELEMENTAL SULFUR—ANTIDUMPING ACT OF 1921

Summary judgment of the Customs Court (now the U.S. Court of International Trade) dismissing appellant's action to recover dumping duties that were assessed on four entries of elemental sulfur exported from Mexico is affirmed.

2. INTERNATIONAL TRADE COMMISSION—PRACTICE AND PROCEDURE—INJURY DETERMINATION

The Customs Court correctly held that: (1) The U.S. Tariff Commission's decision to receive an exhibit on a confidential basis during its injury determination investigation and factfinding hearing was in compliance with its Rules of Practice and Procedure; (2) no due process violation occurred during the Commission's investigation and hearing from its refusal to permit appellant's inspection of the confidential exhibit for cross-examination purposes and its restriction of witness cross-examination; and, (3) the Commission's injury determination was not arbitrary, capricious, or an abuse of discretion, nor was it contrary to law.

3. ID.—ADOPTION OF CUSTOMS COURT OPINION

The Customs Court opinion (83 Cust. Ct. ——, C.D. 4823, 377 F.Supp. 201 (1979)) is adopted as the opinion of this court.

U.S. Court of Customs and Patent Appeals, December 11, 1980

Appeal from United States Customs Court, C.D. 4823

[Affirmed.]

J. Alan Galbraith, attorney of record for Pasco Terminals, Inc., appellant.

Alice Daniel, Assistant Attorney General, *David M. Cohen*, Director Commercial Litigation Branch, *Velta A. Melnbrencis*, Assistant Branch Director, for appellee.

[Oral argument on October 6, 1980 by J. Alan Galbraith for appellant and by Velta A. Melnbrencis for appellee.]

Before MARKEY, Chief Judge, RICH, BALDWIN, MILLER, and NIES, Associate Judges.

BALDWIN, Judge.

[1] This is an appeal from a judgment of the U.S. Customs Court, 83 Cust. Ct.——, C.D. 4823, 477 F. Supp. 201 (1979), granting the U.S. motion for summary judgment; denying the cross-motion for summary judgment of Pasco Terminals, Inc. (Pasco); and dismissing Pasco's action to recover dumping duties that were assessed on four entries of elemental sulfur exported from Mexico. We affirm.

Before the Customs Court (now the U.S. Court of International Trade) Pasco did not challenge the less than fair value (LTFV) determination of the Secretary of the Treasury nor the Customs Service's computation of dumping duties. Rather, Pasco claimed invalidity of the 1972 determination of the U.S. Tariff Commission [1] (Commission) that a domestic industry was being injured by reason of the importation of elemental sulfur from Mexico which was being, or was likely to be, sold at less than fair value within the meaning of section 201(a) of the Antidumping Act of 1921, as amended (19 U.S.C. 160(a)). Pasco based its claim on the following contentions:

> (1) The Commission proceeding was procedurally defective in that: (a) The Commission failed to abide by its own rules of practice and procedure by deciding to receive an exhibit on a confidential basis; and (b) the Commission violated due process rights when in the course of its investigation and factfinding hearing it refused to permit inspection of a confidential exhibit for cross-examination purposes and restricted cross-examination of a witness; and
>
> (2) The Commission determination of injury was arbitrary, capricious, an abuse of discretion, and not according to law.
>
> The issue before us is whether or not the Customs Court was correct in rejecting Pasco's contentions and in upholding the Commission's injury determination.

Additional background and relevant facts are thoroughly presented in the Customs Court opinion and need not be repeated here.[2]

OPINION

[2] The Customs Court held that: (1) The Commission's decision to receive exhibit 2 on a confidential basis was in full compliance with its

---

[1] The U.S. Tariff Commission was subsequently renamed the U.S. International Trade Commission by sec. 171(a) of the Trade Act of 1974 (19 U.S.C. 2231(a) (1975)).

[2] The facts are drawn from a limited record. The portions of the Commission's record brought before the Customs Court consisted only of a certified copy of the transcript of the public hearing and exhibits introduced before the Commission during that hearing and a copy of the Commission's determination of injury including the two statements of reasons for the affirmative determination. Neither party in this case sought discovery of the entire investigative record before the Commission which included, in addition to the evidence adduced at the public hearing, written submissions from interested parties and factual information obtained by the Commission's staff from questionnaires, personal interviews, and other sources. Rather, both parties agreed that the Customs Court should decide the case on the limited record before it.

own rules of practice and procedure; (2) no due process violation occurred in the course of the Commission's investigation and fact-finding hearing from its refusal to permit inspection of a confidential exhibit for purposes of cross-examination and its restriction of cross-examination of a witness; and (3) the Commission's injury determination was not arbitrary, capricious, or an abuse of discretion, nor was it contrary to law. After considering the arguments of the parties and after reviewing the record before us, we are persuaded that the Customs Court's holding is correct.

[3] Accordingly, we *affirm* the judgment of the Customs Court, and adopt the court's opinion as our own.

Although I agree with the majority opinion, appellant's due process arugments merit discussion.

The circumstances are as follows: Pasco was the only foreign producer heard from at a public hearing [3] during which certain trade secrets were introduced into evidence by Freeport (confidential exhibit 2). Exhibit 2 is a compilation of statements of shrewd, vigorously competitive, large-scale sulfur purchasers.[4] Pasco requested access to the exhibit and an opportunity for cross-examination of persons who compiled it. The Commission refused. Indeed, Pasco was not granted access until after the Commission's decision was rendered. "[T]he Commission, in its injury determination, relied on Freeport's examples [in exhibit 2] of offers assertedly made by [Pasco] to customers of Freeport at prices below the then prevailing market price." [5] This determination resulted in assessment against Pasco of a special dumping duty of $2.16 per long ton under 19 U.S.C. 161.

Pasco asserts that some of the statements in the exhibit are false; that offers relied on by the Commission as allegedly originating with Pasco were in fact false representations by purchasers to Freeport, made in an effort to lure Freeport into lowering its price; that if it had been given access to the exhibit or had been permitted cross-examination, the truthfulness of the statements (labeled heresay by Pasco) could have been proved false.

Pasco argues that its due process rights were violated by the Commission on two grounds. First, that the Commission had a long-established procedure permitting cross-examination on matters introduced at public hearings and that by its departure from this procedure Pasco's due process rights were violated. However, Pasco has failed to establish the existence of such long-established procedure. Both *Norwegian Nitrogen Co.* v. *United States*,[6] cited by Pasco, and the

---

[3] *Pasco Terminals, Inc.* v. *United States*, — Cust. Ct. —, —, C.D. 4823, 477 F. Supp. 201, 219 n. 16 (1979).

[4] *See Pasco Terminals, Inc.* v. *United States*, *supra* at —, 477 F. Supp. at 205.

[5] *Pasco Terminals, Inc.* v. *United States*, *supra* at —, 477 F. Supp. at 209-10.

[6] 288 U.S. 294 (1933). In *Norwegian Nitrogen*, as in this case, —the Commission did not permit cross-examination of matters which had been presented to the Commission in confidence. *Id.* at 299.

Commission's rules [7] indicate that cross-examination is not a matter of right.

The second ground advanced by Pasco is that the Commission proceedings were adversary in nature and that, therefore, Pasco was entitled to have access to the confidential exhibit and to conduct cross-examination of adverse parties. It is clear that what the Customs Court (now the U.S. Court of International Trade) labeled "a non-adjudicative factfinding investigation" was not for the purpose of rulemaking by the Commission or for legislative action, but, rather, was for the purpose of establishing injury to U.S. industry resulting in imposition of a special dumping duty. Once such injury is established, it must be upheld if supported by substantial evidence. *Armstrong Bros. Tool Co.* v. *United States*, —— CCPA ——, C.A.D. 1252, 626 F. 2d 168 (1980); *Imbert Imports, Inc.* v. *United States*, 60 CCPA 123, C.A.D. 1094, 475 F. 2d 1189 (1973). Accordingly, there is some merit to Pasco's contention—at least on the access point.[8] However, I am satisfied that, apart from confidential exhibit 2, the Commission's determination is supported by substantial evidence and that, therefore, any error in the denial of access to that exhibit was harmless.

It should be pointed out that Congress has recently taken action, effective January 1, 1980, to assure "limited" access to confidential information before the Commission. 19 U.S.C. 1677f (Public Law 96-39 (1979)).[9] The reasons for the legislation are set forth in S. Rept.

---

[7] 19 CFR 201.12. Conduct of nonadjudicative hearings provides:

(c) *Questioning of witnesses.*—After completing testimony, a witness may be questioned by any member of the Commission or by its staff. Any person who has entered an appearance in accordance with § 201.13 *may, with the permission of the presiding officials*, direct questions to the witness, *but only for the purpose of assisting the Commission* in obtaining relevant and material facts with respect to the subject matter of the investigation. [Italic supplied.]

[8] *See Zenith Radio Corp.* v. *Matsushita Electric Industrial Co.*, No. 74-2451, 3247, slip op. at 48 (E.D. Pa. Sept. 19, 1980) (injury to U.S. industry determination by the Commission in an antidumping proceeding under 19 U.S.C. 160 was not trustworthy in an evidentiary sense and not admissible under Fed. R. Evid. 803(8) in part because the Commission considered confidential submissions which were not disclosed to, or subject to cross-examination by, importers). With respect to the cross-examination point, Pasco's position is weak, absent evidence that the special dumping duty assessed is, in substance, a penalty. *See Helwig* v. *United States*, 188 U.S. 605 (1903); *C. J. Tower & Sons* v. *United States*, 21 CCPA 417, T.D. 46943, 71 F. 2d 438 (1934); *cf. Hammond Lead Products, Inc.*, 58 CCPA 129, C.A.D. 1017, 440 F. 2d 1024, *cert. denied*, 404 U.S. 1005 (1971).

[9] 1677*l*. ACCESS TO INFORMATION

* * * * * * *

(c) Limited disclosure of certain confidential information under protective order.—

(1) DISCLOSURE BY ADMINISTERING AUTHORITY OR COMMISSION.—

(A) IN GENERAL.—Upon receipt of an application, which describes with particularity the information requested and sets forth the reasons for the request, the administering authority and the Commission may make confidential information submitted by any other party to the investigation available under a protective order described in subparagraph (B).

(B) PROTECTIVE ORDER.—The protective order under which information is made available shall contain such requirements as the administering authority or the Commission may determine by regulation to be appropriate. The administering authority and the Commission shall provide by regulation for such sanctions as the administering authority and the Commission determine to be appropriate, including disbarment from practice before the agency.

(2) DISCLOSURE UNDER COURT ORDER.—If the administering authority denies a request for information under paragraph (1), or the Commission denies a request for confidential information submitted by the petitioner or an interested party in support of the petitioner concerning the domestic price or cost of production of the like product, then application may be made to the United States Customs Court [now the United States Court of International Trade] for an order directing the administering authority or the Commission to make the information available * * *.

> *Reasons for the provision.*—Section 777 provides the maximum availability of information to interested parties consistent with the need to provide adequate protection for information accorded confidential treatment. Petitioners under the antidumping and countervailing duty laws have long contended that their ability to obtain relief has been impaired by its [sic] lack of access to the information presented by the exporters and foreign manufacturers. By the same token, importers, exporters, and other respondents in such cases have complained of lack of access to information supplied by the domestic parties to such cases, particularly with respect to the economic health of the domestic industry involved. Access to information at the administrative level is even more imperative under the bill, which provides that the standard of judicial review of most administrative actions in countervailing duty and antidumping duty proceedings is one of review on the administrative record.

At the same time, the Commission has declared that a hearing conducted in an antidumping or countervailing duty investigation is not governed by the Administrative Procedure Act and that it will not change its practice of limiting the questioning of witnesses to the purpose of assisting the Commission to obtain relevant and material facts. 44 F.R. 76459.

333-197 O - 81 - 3

United States Court of International Trade

One Federal Plaza

New York, N.Y. 10007

Chief Judge

Edward D. Re

Judges

Paul P. Rao
Morgan Ford
Scovel Richardson
Frederick Landis
James L. Watson
Herbert N. Maletz
Bernard Newman
Nils A. Boe

Senior Judge

Samuel M. Rosenstein

Clerk

Joseph E. Lombardi

Decisions of the United States Court of International Trade

(Slip Op. 80–7)

AMERICAN WINE & IMPORTING CO., PLAINTIFF *v.* UNITED STATES, DEFENDANT

Court No. 75–7–01745

Limited content of carbon dioxide in "still wine"

EVIDENCE—PRIMA FACIE CASE

Plaintiff imported 700 cases of Lambrusco Amabile red wine, with 12 bottles to each case, from Italy. The Government on the basis of an official laboratory report of one bottle of the imported merchandise showing the carbon dioxide content to be in excess of the

statutory limit of 0.277 grams per 100 milliliters, classified the import as "champagne and other sparkling wines," under item 167.10, TSUS. Part 41 of the Customs Manual required tests to be made on two bottles. The plaintiff through chemists from two different laboratories produced laboratory reports of tests on 11 bottles of the import which, with one exception, had a carbon dioxide content below the statutory limit of 0.277 gram per 100 milliliters, thus qualifying the import as a "still wine." In the opinion of these two expert witnesses their test results of 10 of the 11 bottles tested were more reliable than the one test performed for Customs Service. Even the chemist witness for the Customs Service admitted that statistically the tests made for plaintiff were more representative of the entire shipment than the one test performed for the Customs Service. Plaintiff brought out that all shipments of Lambrusco Amabile red wine imported from Italy before and after the shipment in issue were classified as "still wine."

HELD:

Plaintiff, through the evidence it has adduced, has made a prima facie case, which the defendant has not rebutted. The classification of the Customs Service that the imported merchandise is "champagne and other sparkling wines" under item 167.00. TSUS, is overruled and the import is classified as a "still wine" under item 167.30, TSUS

[Judgment for plaintiff.]

(Decided December 2, 1980)

Glad' Tuttle & White (*Stephen S. Spraitzar* at the trial and on the briefs) for the plaintiff.

Alice Daniel, Assistant Attorney General; *Joseph I. Liebman*, Attorney in Charge, Field Office for Customs Litigation (*Jerry P. Wiskin* at the trial and on the brief), for the defendant.

RICHARDSON, Judge: This case involves the tariff reclassification of Lambrusco Amabile red wine imported from Italy.

The U.S. Customs Service classified the imported merchandise under item 167.10, TSUS, as modified by T.D. 68–9 with a duty rate of $1.17 per gallon, plus $3.40 per gallon Internal Revenue Tax under 26 U.S.C. 5041(b)(4)—a total of $67,000—as "champagne and other sparkling wines," on the basis of an official laboratory report of one bottle of the imported merchandise by the Bureau of Alcohol, Tobacco and Firearms Field Laboratory in Atlanta, Ga., which showed that the carbon dioxide content was in excess of the statutory limit of 0.277 gram per 100 milliliters. There were 700 cases of wine with 12 (1 pt., 8 ozs.) bottles to each case in the shipment.

The plaintiff, American Wine & Importing Co., contends that the carbon dioxide content of the imported wine was less than 0.277 gram per 100 milliliters, and as such should have been classified under item 167. 30 as a still wine produced from grapes, with duty assessable thereunder at the rate of 37.5 cents per gallon plus 17 cents per

gallon Internal Revenue Tax under 26 U.S.C. 5041(b)(1); and that the test result of the Customs Service was not representative of the imported merchandise.

In support of plaintiff's contention it introduced into evidence reports of three laboratory tests by Industrial Laboratories in Fort Worth, Tex., of three bottles of the shipment the laboratory had tested which showed the following grams of carbon dioxide per 100 milliliters of wine: 0.240, 0.242, and 0.234; and laboratory reports by Allied Analytical & Research Laboratories in Dallas, Tex., of four bottles of the shipment it had tested, which showed the following grams of carbon dioxide per 100 milliliters of wine: 0.162, 0.168, 0.351, and 0.211. Allied had four other bottles tested which were well below the maximum. (Where more than one test was run on a bottle, the court has taken the highest test results.)

It is noted that, with the exception of one bottle tested by Allied Analytical & Research Laboratories at 0.351, the bottles tested by both companies tested below the statutory limit of 0.277. Plaintiff claims the test results below 0.277 are representative of the imported merchandise.

Henri A. Loper, general manager of American Wine & Importing Co., testified that in all shipments prior to the one in issue including shipments through 1974, and subsequent to the one in issue, the Lambrusco wine from the same vinter and bottler in Italy, Melandri, was classified as still wine by Customs.

After Customs had one bottle of the merchandise in issue tested by the field laboratory, Bureau of Alcohol, Tobacco and Firearms in Atlanta, Ga., plaintiff, through its broker, Darrell J. Sekin, had Industrial Laboratories test two bottles of the shipment, which averaged out 0.240 gram of carbon dioxide per 100 milliliters. These test results were submitted to the Customs Service, which elected to rely on their own laboratory test. Mr. Sekin received and sent to Industrial Laboratories another bottle from the same shipment which also tested below 0.277 gram per 100 milliliters of carbon dioxide.

Mr. Herman Morris Weller, a chemist and president of Allied Laboratories in Dallas, Tex., after being qualified as an expert witness, testified that in his opinion defendant's test of one bottle of the shipment was inadequate, and that Allied's test results were adequate and reliable.

Mr. Donald Cowan Strathdee, chief chemist of Industrial Laboratories of Fort Worth, Tex., after being qualified as an expert witness testified that in his opinion, defendant's test of one bottle was inadequate; and that Industrial's test of three bottles was well below 0.277 gram per 100 milliliters.

Defendant's witness, Mr. Clarence E. Paul, chief of the field labora-

tory of the Bureau of Alcohol, Tobacco and Firearms in Atlanta, Ga., who made the test on the one sample bottle submitted to him, admitted on cross-examination that statistically the test made for the American Wine Co. were more representative of the entire shipment than the one test performed for the Customs Service, because Industrial and Allied "analyzed more samples" than he did. And "you could probably say there are more samples in this lot of wine that are below 0.277 than there are above."

The Customs import specialist, Mr. Harvey O. McFadden, stated that he was responsible for determining how many samples should be procured, that he only requested one bottle from American Wine, and that he thought it representative of the carbon dioxide content of the shipment. He said that he acted pursuant to section 14.2(h), 19 CFR 14.2(h) (1973), which provided:

> If the District Director of Customs requires samples from packages not designated for examination, he shall request the importer, on Customs form 5561, to submit *them* [Italic added.].

Apparently Mr. McFadden was not aware that section 14.2(h) had been superseded by section 151.11 in 1974 when the merchandise was entered. There was however no change in substance in the new section 151.11. It is noted that the regulation says samples, not one sample.

Plaintiff contends that "Part 41.—Sampling" contained in its exhibit 4—the Customs Manual—section 41.3(b)(4)Z requires that in lots of 501 and over there should be two samples tested. There were 700 cases in the involved shipment. It is required that: "The provisions of this manual are to be strictly observed and followed by all Customs officers and employees unless compliance with any such provision be expressly waived in writing." Mr. McFadden testified that he had not known of any document waiving the provisions of part 41. Defendant's argument that the provisions in the manual are directory and not mandatory is inconsistent with the language in the manual requiring that its provisions be strictly complied with. The Government must comply with testing requirements. *United States* v. *Exxon Corporation, Chevron Oil Co.*, 66 CCPA ——, C.A.D. 1233, 607 F. 2d 985 (1979).

The defendant cites the case of *Rosen Enterprises, Inc.* v. *United States*, 76 Cust. Ct. 226 (1976) as being in support of its position that part 41 is not applicable. The *Rosen* case involved a question of appraisement of cigarette lighters which had been examined and released by Customs inspectors under special permits for immediate delivery. The court assumed the appropriate designation and examinat on of the merchandise for appraisement purposes was made in compliance with law as there was no evidence to the contrary introduced by the plaintiff. The case before the court involves a classifica-

tion, rather than an appraisement issue, and the part 41 relied upon by plaintiff relates to "Sampling for laboratory purposes as distinguished from sampling for appraisement purposes. The latter are governed by instructions issued locally by the various appraisers," now import specialists. Customs Manual, section 41.1(b) of part 41 states "The amount of sampling for testing called for in this part 41 represents the minimum requirements." Two samples were the minimum required of more than 501 cases and the involved shipment contained 700 cases; and the Government elected to make only one sample.

The defendant raises the doctrine of commingling in its brief. No notice of commingling was given to American Wine by Customs. Commingling was not raised in the pleadings or at the trial, and it is not applicable to the facts in this case.

Plaintiff, through the evidence it has adduced showing that the carbon dioxide content of the wine was less than 0.277 gram per 100 milliliters of wine, has made a prima facie case. The evidence presented by the government is not sufficient to rebut plaintiff's evidence. Therefore, the classification of the Customs Service that the imported merchandise is "champagne and other sparkling wines" is overruled and the import is classified as a "still wine" under item167.30. *Aluminum, Company of America* v. *United States*, 60 CCPA 148, C.A.D. 1102 477 F. 2d 1396 (1973).

Judgment will be entered accordingly.

(Slip Op. 80–8)

MOUNT WASHINGTON TANKER COMPANY, A SUBSIDIARY OF VICTORY CARRIERS, INC., PLAINTIFF *v.* UNITED STATES, DEFENDANT

Court No. 73–6–01399

Ship repairs

Ship repairs performed on the high seas by a foreign crew held to be repairs made in a "foreign country" within the intendment of 19 U.S.C. 1466(a).

JUDICIAL REVIEW

The Secretary of the Treasury's discretionary authority to remit foreign repair duties is subject to judicial review to assure that the administrative action is not arbitrary, capricious, an abuse of discretion, or otherwise not in accordance with law. Under the limited scope of review applicable in cases involving express delegation of discretionary authority, if the administrative decision is not contrary to

law and has a rational basis in fact, the courts will not substitute their discretion for that of the administrator. *Suwannee Steamship Co.* v. *United States*, 79 Cust. Ct. 19, C.D. 4708, 435 F. Supp. 389 (1977).

RULES OF CONSTRUCTION

The courts must in all cases interpret a statute to give effect to the statutory purpose and legislative intent. *Sandoz Chemical Works, Inc.* v. *United States*, 43 CCPA 152, C.A.D. 623 (1956); *Schmidt, Pritchard & Co., Inc., et al.* v. *United States*, 77 Cust. Ct. 1, C.D. 4666 (1976). The literal construction need not prevail if other portions of the statute and its legislative history provide a meaning more in keeping with the purposes sought to be achieved in enacting the statute. *Procter & Gamble Manufacturing Co.* v. *United States*, 19 CCPA 415, T.D. 45578, *cert. denied*, 287 U.S. 629 (1932); *S & T Imports, Inc.* v. *United States*, 78 Cust. Ct. 45, C.D. 4690 (1977).

SHIP REPAIRS—COSTS OF LABOR

The legislative intent embodied in 19 U.S.C. 1466 was the protection of the American shipbuilding and repair industries. *Suwannee Steamship Co.* v. *United States, Supra; Erie Navigation Co.* v. *United States*, 83 Cust. Ct. 47, C.D. 4820, 475 F. Supp. 160 (1979); *United States* v. *Gissel*, 353 F. Supp. 768 (S.D. Tex. 1973), *aff'd*, 493 F.2d 27 (5th Cir. 1974). It is apparent from the legislative history of section 1466 that the protection afforded domestic shipbuilding and repair industries also included labor and labor costs.

SHIP REPAIRS—HIGH SEAS

Ship repairs performed on the high seas by workers who are not "residents of the United States, or * * * members of the regular crew," are dutiable as falling within the intendment of Congress. The term "foreign country" has not been given a precise and technical meaning. Its scope and meaning have been determined by the courts by reference to the purpose of the legislation.

SHIP REPAIRS—EXPENSES OF REPAIRS

Compensation to foreign repairmen for travel time to and from the ship cannot be viewed as pay for the installment of equipment nor performance of actual repairs. Inclusion of that expense in the computation of the cost of foreign repairs dutiable under 19 U.S.C. 1466(a) is outside the statutory mandate and not in accordance with the law. *International Navigation Co., Inc.* v. *United States*, 38 Cust. Ct. 5, C.D. 1836, 148 F. Supp. 448 (1957); *American Mail Line, Ltd.* v.

United States, 34 Cust. Ct. 197, C.D. 1704, *aff'd on rehearing*, 35 Cust. Ct. 142, C.D. 1735 (1955).

[Judgment in part for plaintiff.]

(Decided December 5, 1980)

Rode & Qualey (*John S. Rode* and *David C. Williams* on the briefs) for the plaintiff.

Alice Daniel, Assistant Attorney General; *Joseph I. Liebman*, Attorney in Charge, Field Office for Customs Litigation (*Susan C. Cassell* on the brief), for the defendant.

RE, Chief Judge: In this action, plaintiff seeks summary judgment of its claim alleging that the Customs Service incorrectly denied it remission of certain duties assessed on repairs to a vessel. Asserting that the assessment of duties was proper, defendant has cross-moved for summary judgment.

The repairs were performed on plaintiff's tanker, the T/S *Mount Washington*, a vessel documented under the laws of the United States. At the time of the repairs, the vessel was engaged in transporting oil between various Pacific ports. The repairs, which consisted of overhauling the main generator, were not occasioned by stress of weather or other casualty at sea, and, therefore, would not qualify for the remission of duties under 19 U.S.C. 1466(b). *See Suwannee Steamship Co.* v. *United States*, 79 Cust. Ct. 19, C.D. 4708, 435 F. Supp. 389 (1977).

In the making of the repairs, plaintiff did not use regular members of the ship's crew. Instead, plaintiff hired employees of a Swedish corporation who were flown from Sweden to the Philippines to join the tanker. These repairmen, signed on as special members of the crew, were on the T/S *Mount Washington* for about 1½ months.

During most of this time, the ship was on the high seas. For brief periods, however, the ship put into the ports of Subic Bay, Singapore, and Bahrein. Although the T/S *Mount Washington* was not brought into a shipyard on these occasions, the Swedish employees performed repairs while the ship was at those ports. Upon completion of their work, the Swedish employees disembarked at the port of Manila and were flown back to Sweden.

Upon the tanker's return to the United States port of Honolulu, the Customs Service assessed duties on the expenses of the repairs pursuant to 19 U.S.C. 1466(a). Under that section, a duty of 50 percent is assessed on "the expense of repairs made in a foreign country upon a vessel documented under the laws of the United States to engage in the foreign or coasting trade." In computing the duties, Customs included not only the cost of the repairs performed in port, but also

the cost of the work performed at sea. Customs also included the compensation paid to the repairmen for the time spent traveling between Sweden and the T/S *Mount Washington*.

Plaintiff, whose petition for remission of the repair duties was denied, has brought this action to recover the duties paid alleging that none of the repairs fall within the meaning of 19 U.S.C. 1466(a). Additionally, as a first alternative claim, plaintiff urges that any duties assessed should be limited to the cost of repairs actually performed while the ship was at port. As a second alternative claim, plaintiff maintains that, even if both the repairs performed at sea as well as those in port are to be included in computing the dutiable expenses, the travel compensation of the repairmen, i.e., the $1.60 per hour paid the workers during their journeys, should not be included.

The facts are not in dispute. What is in issue is the interpretation and application of section 1466(a),[1] which reads, in pertinent part:

> § 1466. Equipment and repairs of vessels
>
> (a) Vessels subject to duty; penalties:
>
> The equipments, or any part thereof, including boats, purchased for, or the repair parts or materials to be used, or the *expenses of repairs made in a foreign country* upon a vessel documented under the laws of the United States to engage in the foreign or coasting trade, or a vessel intended to be employed in such trade, shall, on the first arrival of such vessel in any port of the United States, be liable to entry and the payment of an ad valorem duty of 50 per centum on the cost thereof in such foreign country * * *. [Italic added.]

Section 1466(b) provides for the remission of duties for certain necessary repairs. It states that:

> If the owner or master of such vessel furnishes good and sufficient evidence that—
>
> (1) such vessel, while in the regular course of her voyage, *was compelled, by stress of weather or other casualty, to put into such foreign port* and purchase such equipments, or make such repairs, to secure the safety and seaworthiness of the vessel to enable her to reach her port of destination;
>
> (2) such equipments or parts thereof or repair parts or materials, were manufactured or produced in the United States, and the *labor* necessary to install such equipments or to make such repairs *was performed by residents of the United States, or by members of the regular crew of such vessel;* or
>
> (3) such equipments, or parts thereof, or materials, or labor, were used as dunnage for cargo, or for the packing or shoring thereof, or in the erection of temporary bulkheads or other similar devices for the control of bulk cargo, or in

[1] Public Law 91-654, 84 Stat. 1944, recodified 19 U.S.C. 257, 258 as 19 U.S.C. 1466.

> the preparation (without permanent repair or alteration) of tanks for the carriage of liquid cargo;
>
> then *the Secretary of the Treasury is authorized to remit or refund such duties*, and such vessel shall not be liable to forfeiture * * *. [Italic added.]

Although the claim appears to be cast in terms of a remission of duties, it is clear that the claim is not based on section 1466(b), but, rather, upon the contention that the repairs were not subject to the foreign repair duties imposed by section 1466(a). It may nevertheless be noted that the exercise of the authority by the Secretary of the Treasury to remit foreign repair duties is subject to judicial review. Judicial review of discretionary administrative action is available to assure that the action is not arbitrary, capricious, an abuse of discretion, or otherwise not in accordance with law. Judicial decisions teach that in cases of express delegation of discretionary authority, the courts have held the scope or standard of judicial review to be limited. If the administrative decision has a rational basis in fact and is not contrary to law, the courts will not substitute their discretion for that of the administrator. See cases cited in *Suwannee Steamship Co.* v. *United States*, 79 Cust. Ct. 19, 24, C.D. 4708, 435 F. Supp. 389(1977).

Plaintiff's claim for remission or refund of duties on the cost of repairs performed while the T/S *Mount Washington* was in port at Subic Bay, Singapore, and Bahrein is without merit. It has not claimed that those repairs were necessitated "by stress of weather or other casualty." Since they were clearly "made in a foreign country," the repair duties were lawfully imposed, and the Secretary's refusal to remit or refund those duties was entirely proper.

The question presented by plaintiff's alternative claim is whether the repairs made on the high seas were dutiable within the meaning of section 1466(a) which provides for the imposition of duties on the "expenses of repairs made in a foreign country." The court must also determine whether the amount paid the Swedish employees for travel to and from Sweden and the Philippines to perform the repairs was properly included as an expense of the repairs.

It is plaintiff's contention that the requirement in section 1466(a) that repairs be performed in a foreign country "necessarily limits the applicable area to the sovereign territory of a particular state and does not extend to every area outside of the United States." Thus, it maintains that "repairs performed outside a sovereign territory are not performed in a foreign country," and, therefore, are not dutiable. Since the repairs, except for those made at the ports of Subic Bay, Singapore and Bahrein, were made on the high seas, outside the sovereign territory of any state, plaintiff concludes that they were not performed "in a foreign country."

Plaintiff further contends that, since the meaning of the term "foreign country" is plain on its face, it is improper to consult legislative history to determine its meaning. Were legislative history to be consulted, however, plaintiff suggests that the legislative purpose of the statute is to protect American shipyards. It asserts that the statutory protection for American shipyards should not be extended to include on board repairs.

On the facts presented, it is the determination of the court that the ordinary repairs made on the high seas by employees of a Swedish corporation, flown from Sweden and signed on as special members of the crew for the special purpose of making repairs, are dutiable within the meaning of section 1466(a).

It has been stated that "[w]hen aid to construction of the meaning of words, as used in the statute, is available, there certainly can be no 'rule of law' which forbids its use, however clear the words may appear on 'superficial examination.' " *United States* v. *American Trucking Associations*, 310 U.S. 534, 543–44 (1940). It cannot be questioned that the courts must in all cases interpret a statute to give effect to the statutory purpose and legislative intent. *Sandoz Chemical Works, Inc.* v. *United States*, 43 CCPA 152, C.A.D. 623 (1956); *Schmidt, Pritchard & Co., Inc., et al.* v. *United States*, 77 Cust. Ct. 1, C.D. 4666 (1976). Hence, it has been held that when "it appears that a literal interpretation of the statute involved would produce a result contrary to the apparent legislative intent, then the letter of the statute must yield and the legislative intent be carried out. [Cases cited.]" *Procter & Gamble Manufacturing Co.* v. *United States*, 19 CCPA 415, T.D. 45578, *cert. denied*, 287 U.S. 629 (1932). *See also S & T Imports, Inc.* v. *United States*, 78 Cust. Ct. 45, C.D. 4690 (1977).

Plaintiff contends that the term "foreign country" is unambiguous, and that its common meaning "precludes any finding that the high seas are a 'foreign country' for purposes of 19 U.S.C. 1466(a)." In support, the plaintiff cites cases in which the words "country" and "foreign country" have been given a meaning which connotes sovereignty and control over a particular place or area. *See The Winnie*, 65 F. 2d 706 (3d Cir. 1933). Plaintiff submits that repairs performed outside a sovereign territory are not performed in a foreign country, and, therefore, are not dutiable. In support of its contention plaintiff cites the long established principle of international law that the sea is "the common property of all nations." *See The Adventure*, 1 F. Cas. 202 (C.C.D. Va. 1812) (No. 93), *rev'd on other grounds*, 12 U.S. (8 Cranch) 221 (1814).

Defendant, on the other hand, contends that, nowithstanding a common meaning that would appear to exclude the high seas," the words "foreign country" have not been treated uniformly by all courts. It

stresses that "foreign country" has been given a different meaning depending upon the legislative purpose, and, therefore, has acquired no precise or inflexible definition. As an example, the defendant has cited an early Supreme Court case which considered the "high seas" to be a foreign country. In that case, *The Brig Concord*, 13 U.S. (9 Cranch) 387 (1815), the Supreme Court held that goods, captured on the high seas by an American privateer from a neutral Spanish ship, were dutiable under the tariff laws when brought into the United States to be commingled and sold in the commerce of this country.

In *Procter & Gamble Manufacturing Co.* v. *United States, supra*, also cited by the defendant, whale oil was produced aboard a Norwegian ship and brought into this country. The question presented was whether the whale oil was dutiable under the statutory provision for the imposition of duties "upon all articles when imported from any foreign country into the United States." In affirming this court's holding that it was dutiable, the Court of Customs and Patent Appeals, citing the Supreme Court case of *Burnet* v. *Chicago Portrait Co.*, 285 U.S. 1 (1932), stated:

> There is no hard and fast definition for the term "foreign country," as it appears in the acts before us. Such meaning may be broad or narrow, as the apparent intent of the statute requires. 19 CCPA at 421.

Despite the fact that the whale oil was produced outside the territorial sovereignty of a foreign country, specifically, on the high seas, the tariff laws of the United States, which spoke of articles "imported from any foreign country," were interpreted to include importations from the high seas.

Both the *Brig Concord* and the *Procter & Gamble* cases demonstrate clearly that the courts are mindful of the legislative purpose sought to be accomplished by the tariff laws of the United States. Indeed, the Court of Customs and Patent Appeals in *Procter & Gamble* noted that:

> If this language [foreign country] were to be literally construed, therefore, goods that come from the high seas might seem not to be imported from a foreign country, for the high seas are the common property of all nations and the exclusive property of none. 19 CCPA at 418.

Similarly, in the *Brig Concord* case, the Supreme Court distinguished between "goods * * * brought by superior force, or by inevitable necessity, into the United States," and those which may be "afterwards sold or consumed in the country." The Supreme Court stated that goods brought by superior force or inevitable necessity are "not deemed to be so imported." It noted, however, that if such goods

"are afterwards sold or consumed in the country, * * * they become retroactively liable to the payment of duties." 13 U.S. at 388.

The protection of the American manufacturer of goods in the *Brig Concord* case, and the American fisheries industry in the *Procter & Gamble* case, was clearly in the mind of the courts in interpreting the applicable statutory language. Thus, it is clear that in interpreting the meaning of statutory terms used in tariff laws the courts have not been inflexible, but have striven to effectuate the animating purpose of the legislation.

There is no doubt as to the legislative purpose which underlies section 1466. As indicated in *Suwannee Steamship Co.* v. *United States*, 79 Cust. Ct. 19, 26, C.D. 4708, 435 F. Supp. 389 (1977), section 1466 expresses the legislative policy designed to provide maximum protection to American shipyards. *See also Erie Navigation Co.* v. *United States*, 83 Cust. Ct. 47, C.D. 4820, 475 F. Supp. 160 (1979); *United States* v. *Gissel*, 353 F. Supp. 768, 772 (S.D. Tex. 1973), *aff'd*, 493 F.2d 27 (5th Cir. 1974).

In *Suwannee* the court also reviewed the unsuccessful attempts during the consideration of the Tariff Act of 1930 to increase the situations in which duties could be remitted under proposed revisions. In rejecting those proposals, the court noted the concern of Congress that they: "would have provided *insufficient* protection to American shipyards, the class for whose benefit the section was originally formulated." [Italic added.] 79 Cust. Ct. at 26.

The court's conclusion in *Suwannee*, that Congress intended to formulate "a narrow and strict remission provision" in order to protect American shipyards, is strongly documented by the legislative history of section 1466. Plaintiff, however, in its response to defendant's cross-motion for summary judgment, disagrees, and states that: "the purposes and language [of the remission provision section 1466(b)] are subordinate to the general provisions of 19 U.S.C. 1466(a)."

No subdivision should be interpreted in isolation, and, in order to ascertain and effectuate its legislative objective, section 1466 must be read in its entirety. It cannot be questioned that the protection of the domestic shipbuilding and repair industries was of paramount importance in the enactment of this legislation. It also cannot be questioned that, as noted in the *Erie Navigation* case, the concern for these industries was a permissible legislative object.

In its response to defendant's cross-motion for summary judgment, plaintiff contends that, in the repairs performed on the T/S *Mount Washington*, it did not utilize "foreign equipment, materials, shipyards, machine tools, derricks or drydocks; all the domestic counterparts of

which were granted protection by Congress."[2] In this statement plaintiff omits any reference to "labor" despite the fact that the use of *labor* is the heart of the controversy.

That labor was also included in the protection afforded the domestic shipbuilding and repair industries is fully supported by the legislative history of section 1466 and its predecessor provisions. During Congressional hearings on H.R. 2667, which became the Tariff Act of 1930, the report of the House Ways and Means Committee stated:

> The *labor cost* in production *is an essential factor*. The average rate of wages abroad is 40 percent or less than that in the United States. While the effectiveness of foreign labor is increasing, their wage scales have not increased in proportion. This creates a serious situation not only for the manufacturer *but for the laborer*. H. Rept. 7, 71st Cong., 1st Sess. 4 (1929). [Italic added.]

See also Hearings Before the Committee on Ways and Means of the House of Representatives, Tariff Readjustment—1929, 70th Cong., 2d Sess. (1929), Vol. XVI, p. 10290. It should also be noted that one of the expressly stated purposes of H.R. 2667 was to "protect American labor."

From this congressional concern for American labor, it cannot be questioned that the protection afforded under section 1466 to domestic shipbuilding and repair industries was also intended to include labor and labor costs. It is also noteworthy that, in 1930, the phrase, "performed by residents of the United States, or by members of the regular crew" was added to what is now numbered section 1466(b), leaving no doubt that labor, as well as the physical facilities of the shipyard, was intended to be protected.

In considering whether the repairs performed on the T/S *Mount Washington* by a specially hired foreign crew are dutiable under section 1466(a), the court is not unmindful of the possibility that on board repairs might be performed also by United States shipbuilding or repair industries. That question, however, is not before the court. The question presented is limited to whether the on board ordinary repairs performed in the present case, by a foreign crew on the high seas, are embraced within the term "foreign country" within the intendment of section 1466(a).

From all of the foregoing, the court has concluded that, in this case, were the statutory language "foreign country" to exclude the high seas from its ambit, the legislative purpose of section 1466 would be frustrated. It is apparent from a reading of all the cases cited, which plaintiff observes are "not dispositive in interpreting 19 U.S.C. 1466," that the courts, in all instances, have furthered, not frustrated the

---

[2] Counsel's statement is correct with the exception of an amount of $63.86 for cost of material as indicated in invoice No. 3139.

legislative purpose of the statutes under examination. The cases reveal that the interpretation of the words "foreign country" is based upon the courts' understanding of the purpose and intent which underlie the governing statute. In the words of Mr. Justice Reed in *United States* v. *Spelar*, 338 U.S. 217, 221 (1949), "the legislative will must be respected." Thus, to fulfill the legislative intent the term "foreign country" has been interpreted to mean a place foreign to or outside the territorial limits of the United States. *See Procter & Gamble Manufacturing Co.* v. *United States*, 19 CCPA 415, T.D. 45578, cert. denied, 287 U.S. 629 (1932).

That the term "foreign country" has no definitive meaning, apart from its statutory setting, may also be gleaned from the concurring opinion of Mr. Justice Frankfurter in *Spelar*, in which he stated that:

> To assume that terms like "foreign country" and "possessions" are self-defining, not at all involving a choice of judicial judgment, is mechanical jurisprudence at its best. These terms do not have fixed and inclusive meanings, as is true of mathematical and other scientific terms. Both "possessions" and "foreign country" have penumbral meanings, which is not true, for instance, of the verbal designations for weights and measures. It is this precision of content which differentiates scientific from most political, legislative and legal language. 338 U.S. at 223.

The question presented is not simply the meaning of "high seas." It is not questioned that these words have acquired a special meaning in public international law which deals with the mutual relations of states.[3] The question presented here, however, is the meaning of the term "foreign country" within the intendment of 19 U.S.C. 1466(a). To exclude the high seas from the statutory words "foreign country" in the present case, as urged by plaintiff, would frustrate the legislative purpose of aiding American shipyards and American labor. Within the meaning of section 1466(a), the statutory words "foreign country" must include the high seas if its legislative purpose is to be furthered. Notwithstanding any meaning in other contexts, for purposes of section 1466(a) the on board repairs to the T/S *Mount Washington* on the high seas were "repairs made in a foreign country."

The remaining question pertains to the inclusion, in the cost of repairs, of the compensation paid to the foreign repairmen during the travel time to and from the ship. In support of its claim that these expenses should not have been included, plaintiff has cited several cases wherein expenses incident to the repairs, but not directly involved in the repair making itself, have been held to be nondutiable.

---

[3] On the concept of "freedom of the seas" and the regime of the high seas in international law, see II O'Connel, "International Law" 704 (1965) and materials in Henkin, Pugh, Schacter and Smit, "International Law Cases and Materials" 380 et seq. (1980).

Thus, in *International Navigation Co., Inc.* v. *United States*, 38 Cust. Ct. 5, 12, C.D. 1836, 148 F. Supp. 448 (1957), this court considered a determination by the Customs Service that the expense of a repair shop truck and of a launch, delivering repairmen and materials from the pier to the ship at anchor, was dutiable as part of the repair costs. The court found that the transportation of the men and materials was "not part of the actual repairs nor the cost of labor in connection therewith." Hence, the transportation costs were held to be not dutiable as "expenses of repair."

In the *International Navigation* case, the court cited *American Mail Line, Ltd.* v *United States*, 34 Cust. Ct. 197, C.D. 1704, *aff'd on rehearing*, 35 Cust. Ct. 142, C.D. 1735 (1955), and other cases which passed upon the dutiability of certain labor charges. The court in the *American Mail Line* case stated that: "Congress intended that labor charges for the installation of equipment, unless paid to regular crew members, should be dutiable," and distinguished between various labor charges in the following quotation:

> It has been held that shifting boards and feeder boxes are equipment within the meaning of section 466 [19 U.S.C. 1466], *supra*, and that the cost of materials and labor necessary for their erection is dutiable. [Case cited.] Dunnage mats have also been held dutiable as equipment [cases cited], but, in our view, the placing of such articles abroad ship is not the *installation* of equipment. The term 'install' means to set up or fix in position for use, such as a lighting system, a hot-water system, a furnace, fixtures for a restaurant, a sidewalk elevator * * * . Items, such as dunnage mats, which are not fixed in position or attached to the vessel are not 'installed' within the meaning of that term. Therefore, the items herein for laying and handling dunnage * * * are not dutiable under section 466 [19 U.S.C. 1466], *supra*. 34 Cust. Ct. at 201 [Italic in original.]

An additional case cited by the plaintiff is *Geo. Hall Coal Co.* v. *United States*, 11 Treas. Dec. 318, T.D. 27154 (1906), wherein it was held that expenses of drydocking a vessel undergoing repairs were not dutiable as an expense of repair.

It is clear that the travel compensation paid the workers, although an expense incident to the repairs, was not an expense directly involved in the making of the repairs. This item of expense is analogous to transportation costs which are not dutiable as "expenses of repairs" since they are "not considered part of the actual repairs." *International Navigation Co., Inc.* v. *United States*, 38 Cust. Ct. at 12. Hence, the inclusion of that item in the cost of repairs was erroneous.

Accordingly, plaintiff's motion is denied and defendant's motion is granted with respect to the repairs performed in foreign ports and on the high seas, and plaintiff's motion is granted and defendant's motion

is denied with respect to the foreign workers' travel compensation. Judgment will issue accordingly.

Slip Op. 80-9

DI JUB LEASING CORP., DIANNE PELLECCHIA, AND SUSAN JUBERT, PLAINTIFFS *v.* THE UNITED STATES OF AMERICA; THE SECRETARY OF THE DEPARTMENT OF THE TREASURY; THE COMMISSIONER OF CUSTOMS, UNITED STATES CUSTOMS SERVICE; REGIONAL COMMISSIONER OF CUSTOMS, UNITED STATES CUSTOMS SERVICE, NEW YORK REGION; AREA DIRECTOR OF CUSTOMS, UNITED STATES CUSTOMS SERVICE, PORT OF NEWARK, DEFENDANTS

Court No. 80-11-00038

Memorandum and Order on Plaintiffs' Application for Preliminary Injunction and Defendants' Cross-Motion To Dismiss

[Plaintiffs' application for preliminary injunction denied; defendants' cross-motion to dismiss denied.]

(Dated December 5, 1980)

Serko & Simon, Esqs. (*David Serko, Margaret H. Sachter, Henry Putzel, III* and *Maurice M. McDermott*, Esqs., of counsel) for the plaintiffs.

Alice Daniel, Assistant Attorney General (*Joseph I. Liebman*, Attorney in Charge, Field Office for Customs Litigation, *Saul Davis*, trial attorney), for the defendants.

NEWMAN, Judge: This is an action to review a decision of the Commissioner of Customs revoking the customhouse cartman's license of plaintiff Di Jub Leasing Corp. ("Di Jub"). Subject matter jurisdiction is asserted by plaintiffs under 28 U.S.C. 1581(i) (1) and (4). The jurisdictional predicate, as we shall see infra, raises an issue of first impression.

Presently before the court for consideration are plaintiffs' application for a preliminary injunction and defendants' cross-motion to dismiss for lack of subject matter jurisdiction.

Extensive oral argument was heard by the court on November 10, 1980 in connection with plaintiffs' motion under rule 65, brought on by an order to show cause.

JURISDICTION

Initially, we consider the threshold jurisdictional issue presented by defendants' cross-motion to dismiss. As noted supra, plaintiffs predicate jurisdiction on the provisions of 28 U.S.C. 1581(i) (1) and (4), viz, a "residual grant of jurisdictional authority" to this

333-197 O - 81 - 5

court under the Customs Courts Act of 1980, effective November 1, 1980, Public Law 96–417, 94 Stat. 1727, H. Rept. 96–1235, 96th Cong., 2d Sess., at 47. Although these residual provisions relied on by plaintiffs are clear on their face, congressional intent that they be given broad application in cases arising out of our international trade laws is evident from the legislative history of the Customs Courts Act.

Over the years, complex jurisdictional issues have been raised in cases arising out of our international trade laws due to the ill-defined division of jurisdiction between this court's predecessor, the U.S. Customs Court, and the Federal district courts.[1] This division of jurisdiction resulted in inconsistent judicial decisions with litigants proceeding cautiously when choosing a forum for judicial review. H. Rept. 96–1235, at 19. In the instant case, we are confronted again with the question of whether plaintiffs are properly before this court.

The recently enacted Customs Courts Act of 1980 creates a comprehensive system for the judicial review of civil actions arising out of international trade laws, and greatly expands the status, jurisdiction, and powers of the former U.S. Customs Court (renamed on November 1, 1980, the U.S. Court of International Trade). One of the major objectives of the legislation was to eliminate the confusing division of jurisdiction over international trade law disputes between the Customs Court and the Federal district courts. Thus, in its report accompanying the bill which became the Customs Courts Act of 1980 (H.R. 7540) the House Committee on the Judiciary stated (H. Rept. 96–1235, at 27–28):

> H.R. 7540 provides for significant and much needed reform and clarification of the statutes governing the status, jurisdiction, and powers of the U.S. Customs Court. This legislation seeks to accomplish several major goals:
>
> * * * * * * *
>
> 3. The reemphasis and clarification of Congress intent that the expertise and national jurisdiction of the Court of International Trade and the Court of Appeals for International Trade, Patents and Trademarks be exclusively utilized in the resolution of conflicts and disputes arising out of the tariff and international trade laws, thereby eliminating the present jurisdictional conflicts between these courts and the Federal district and appellate courts;

---

[1] The jurisdictional statutes concerning the Customs Court granted that court exclusive jurisdiction to entertain the suits defined by those statutes, while 28 U.S.C. 1340 granted residual jurisdiction to the district courts to entertain any action not within the exclusive jurisdiction of the Customs Court. This division of jurisdiction resulted in a confusing jurisdictional morass, with the all too frequent result that parties would institute suits in the district courts to find, perhaps after long delay and an appeal, that they had chosen the wrong court. See H. Rept. 96–1235, at 29–30, and cases there cited.

In expanding the jurisdiction of the Customs Court, Congress granted the newly named court [2] exclusive jurisdiction over certain specified actions, as enumerated in 28 U.S.C. 1581 (a) through (h), and provided a broad residual grant of jurisdictional authority in section 1581(i). The purpose of the residual jurisdictional provisions in section 1581(i) is stressed in the House Judiciary Committee's report (H. Rept. 96–1235, at 47):

> The purpose of this broad jurisdictional grant is to eliminate the confusion which currently exists as to the demarcation between the jurisdiction of the district courts and the Court of International Trade. This provision makes it clear that all suits of the type specified are properly commenced only in the Court of International Trade. The committee has included this provision in the legislation to eliminate much of the difficulty experienced by international trade litigants who in the past commenced suits in the district courts only to have these suits dismissed for want of subject matter jurisdiction. The grant of jurisdiction in subsection (i) will insure that these suits will be heard on their merits.

With the purposes and objectives of the residual jurisdictional provisions in mind, we shall proceed to determine whether this action is properly before the court under section 1581(i) (1) and (4), as urged by plaintiffs. These provisions read:

> (i) In addition to the jurisdiction conferred upon the Court of International Trade by subsections (a)–(h) of this section and subject to the exception set forth in subsection (j) of this section, the Court of International Trade shall have exclusive jurisdiction of any civil action commenced against the United States, its agencies, or its officers, that arises out of any law of the United States providing for—
>
> (1) revenue from imports or tonnage;
>
> * * * * * *
>
> (4) administration and enforcement with respect to the matters referred to in paragraphs (1)–(3) of this subsection and subsections (a)–(h) of this section.

Specifically, plaintiffs contend that this action contesting the administrative revocation of a customhouse cartman's license arises out of the administration and enforcement of a law providing for revenue from imports. I agree.

The Customs Regulations providing for the licensing of customhouse cartmen are set forth in 19 CFR 112.0, *et seq.*, and these regulations are authorized by 19 U.S.C. 66, 1551a, 1565, and 1624. The regulations describe the role of the cartman in international trade as the transportation of goods or merchandise, on behalf of the Government

---

[2] Congress renamed the U.S. Customs Court the United States Court of International Trade, which new name "more accurately describes the court's clarified and expanded jurisdiction and its new judicial functions relating to international trade". H. Rept. 96-1235, at 20.

or importers, within the limits of a port, for the purposes of storage in warehouse and/or subsequent examination of the merchandise by Customs officers, either in premises under Customs custody, or under the custody of importers. Further, the regulations require that customhouse cartmen be licensed by the District Director, and be bonded.

Plaintiffs have submitted as exhibits attached to their memorandum of law an application form for a customhouse cartman's or lighterman's license, together with the form of bond required for that license (Customs form 3855). An examination of these documents discloses that the primary objective of licensing and bonding cartmen and lightermen is to secure the revenue from imports on which customs duties have not yet been paid. In this connection, it has been noted that the undertaking form provides that in the event of failure to safely transport and deliver the merchandise to the appropriate Customs officer, the cartman is liable for certain sums of liquidated damages. Significantly, the damages for loss of a shipment on which duty is owed are an amount equal to the duties on such merchandise. Moreover, if a shipment is delivered to the ultimate consignee or owner of the merchandise before it has been released by Customs, the liquidated damages specified in the bond are the duty owing plus 25 percent of that duty. It should be noted that a bond is a condition precedent to obtaining a cartman's license.

Customs Collection District No. 10 (New York), through which passes more imported merchandise than any other district in the United States, includes the Ports of New York, and Newark and Perth Amboy, N.J. Imported merchandise in Customs custody, on which many millions of dollars in duty are owed to the Government, must be transported within and away from that area from port to port or to bonded warehouses. Obviously, before duties are paid, imported merchandise cannot be released to the consignee, or to carriers and truckers without protection of the revenue from imports. Hence, all persons in possession of such goods must be bonded, from the importer who has an Immediate Delivery Permit to the licensed customhouse cartman who picks up the merchandise at the pier, so that the Government has recourse under the bonds for the payment of duties. Essentially, the revenue from imports is thereby protected.

In accordance with 19 U.S.C. 1551a (Public Res. 108 of June 19, 1936):

> The Secretary of the Treasury * * * is * * * authorized, when it appears to him to be in the interest of commerce, and notwithstanding any provision of law or regulation requiring that the transportation of imported merchandise be by a bonded common carrier, to permit such [imported] merchandise which has been entered and examined for customs purposes to be transported by bonded cartmen or bonded lightermen between

the ports of New York, Newark, and Perth Amboy, which are all included in Customs Collection District Numbered 10 (New York) * * *".

Additionally, Customs Regulations, part 18, on "Transportation in Bond and Merchandise in Transit", includes a section 19 CFR 18.1 (b), authorizing the District Director to:

> * * * permit merchandise entered and examined for Customs purposes to be transported in bond between the ports named in the resolution by bonded cartmen or lightermen duly qualified in accordance with the provisions of part 112, *if the District Director is satisfied that the transportation of such merchandise in this manner will not endanger the revenue.* [Italic added.]

Significantly, then the regulations providing for a cartman's license implement the District Director's authority.

In sum, the present action contesting the revocation of Di Jub's cartman license is within this court's exclusive jurisdiction under 28 U.S.C. 1581(i) (1) and (4) because the revocation of a cartman's license pursuant to the Customs regulations is so intertwined with and directly related to the administration and enforcement of the laws providing for revenue from imports. I have no doubt that, by the residual grant of jurisdictional authority in section 1581(i), Congress intended to assure comprehensive review in this court of a broad spectrum of administrative actions arising out of our international trade laws, including those laws concerning the suspension or revocation of various Customs licenses. Were the opposite true, it would frustrate a major congressional goal of the Customs Courts Act of 1980 to "eliminate the confusion which currently exists as to the demarcation between the jurisdiction of the district courts and the Court of International Trade." H. Rept. 96–1235, at 47.

Although generally, jurisdictional statutes are to be strictly construed,[3] the legislative history of the residual jurisdictional provisions in section 1581(i) obviously evinces congressional intent that these special provisions shall be accorded a broad construction. H.R. 6394, the predecessor of H.R. 7540 (which became the Customs Courts Act of 1980), added a new section 1581(i) to title 28, U.S.C., granting residual jurisdiction to this court. This section granted the court jurisdiction over those civil actions which arise directly out of an import transaction and involve one of the many international trade laws. Significantly, in the proposed section 1581(i) of H.R. 7540, as amended, the specific listing of statutes in the residual provisions was

[3] *United States* v. *Boe*, 64 CCPA 11, 15–16, C.A.D. 1177, 543 F. 2d 151 (1976). While defendants rely upon the well-settled principle that the United States cannot be sued in the courts without its consent (viz, a waiver of sovereign immunity), defendants do not argue that no judicial review at all is available for the revocation of a cartman's license. Indeed, the revocation of a cartman's license was in fact reviewed in a Federal district court (*Tempo Trucking and Transfer Corporation* v. *Dickson*, 405 F. Supp. 506 (E.D.N.Y. 1975)) prior to the enactment of the Customs Courts Act of 1980.

eliminated in favor of a broader generic approach. Congress eschewed the listing of specific statutes in the residual provisions because it feared such listing "would result in an inadvertent omission of a statute, thereby creating further confusion in the minds of international trade law litigants". H. Rept. 96–1235, at 33–34. More, the language in proposed section 1581(i), as contained in section 201(a) of H.R. 6394, "arises directly from an import transaction", was deleted. Under proposed section 1581(i) of H.R. 7540, as amended, "the Court of International Trade has jurisdiction over those civil actions which arise out of a law of the United States pertaining to international trade". H. Rept. 96–1235, at 34.

Defendant urges that the explicit granting to this court of jurisdiction over the denial, revocation, or suspension of a customhouse broker's license pursuant to 28 U.S.C. 1581(g) indicates that Congress did not intend to empower this court to review a cartman's license revocation proceeding under section 1581(i). In support of this argument, defendant relies upon the well-known principle of statutory construction: expressio unius est exclusio alterius.

I am clear that the specific jurisdictional authority granted to this court under section 1581(g) does not indicate congressional intent to exclude from this court's jurisdiction the review of cartmen's license revocation proceedings. The following legislative history of section 1581(g) plainly shows why Congress explicitly provided for jurisdiction in the case of customhouse brokers' licenses (H. Rept. 96–1235, at 32–33):

> Under section 641 of the Tariff Act of 1930, the United States courts of appeals have jurisdiction to review a decision by the Secretary of the Treasury to deny, revoke, or suspend a customhouse broker's license. In keeping with the overall purpose of the Customs Courts Act of 1980, H.R. 6394 transferred jurisdiction over these actions to the United States Court of Appeals for International Trade, Patents and Trademarks (See sec. 401(c)(1) of H.R. 6394).
>
> This transfer of jurisdiction met with some resistance from the representatives of the customhouse brokers. They testified that provisions in H.R. 6394 imposed an undue economic hardship on customhouse brokers by requiring them to travel to Washington, D.C., for a hearing before the Court of Appeals for International Trade, Patents and Trademarks. It was the opinion of the National Customs Brokers & Forwarders Association that "the existing right of an aggrieved customhouse broker to have his complaint heard without undue expense in his own territory" should be preserved, in particular by permitting concurrent jurisdiction between the Court of Appeals for International Trade, Patents and Trademarks and the United States courts of appeals. [Footnote omitted.]
>
> In an effort to protect the rights of an aggrieved customhouse

broker and at the same time preserve the goal of uniformity of jurisdiction over civil actions involving the international trade laws, the subcommittee suggested granting exclusive jurisdiction over these actions to the U.S. Court of International Trade. None of the witnesses, including the A.B.A. and the Justice Department objected to this suggestion. In fact, the National Customs Brokers & Forwarders Association stated that:

> Since the new Court of International Trade (now the U.S. Customs Court) is set up to hold, and has in the past held, hearings from time to time at various ports in the country, while the new Court of Appeals for International Trade, Patents and Trademarks has not, and does not regularly do so, our present objection * * * would be removed. [Footnote omitted.]

Accordingly, the subcommittee adopted an amendment vesting exclusive jurisdiction over these civil actions in the Court of International Trade, now found in proposed section 1581(g), as contained in section 201 of H.R. 7540.

Inasmuch as Congress intended to transfer jurisdiction over customhouse brokers' license proceedings from the courts of appeals under 19 U.S C. 1641(b) to this court, it is perfectly logical that under the circumstances delineated in the House report the desired transfer of jurisdiction was explicitly effectuated in 28 U.S.C. 1581. Despite the specific provisions in section 1581(g) concerning customhouse brokers' licenses, the legislative history of the Customs Courts Act of 1980 suggests no congressional intent whatever to limit this court's jurisdiction respecting review of license proceedings to those involving customhouse brokers. I can perceive of no reason why Congress would grant this court jurisdiction in the case of customhouse brokers' licenses, and intend to withhold jurisdiction respecting cartmen's licenses. On the contrary, the Judiciary Committee commented (H. Rept. 96–1235, at 46):

> * * * In keeping with the *underlying policy of this legislation [H.R. 7540] to establish a uniformity of jurisdiction of civil actions involving the tariff and international trade laws*, the committee believes it is appropriate to repose jurisdiction over these cases [customhouse broker's licenses] in the Court of International Trade. * * * [Italic added.]

The rationale expressed above by the House Committee on the Judiciary for reposing jurisdiction in the Court of International Trade of actions involving coustomhouse brokers' licensesisequally opposite to actions contesting the revocation of a cartman's license.

Since the primary purpose of licensing customhouse cartmen is for the protection of the governmental revenue from imports, this action arises out of the administration and enforcement with respect to a law of the United States providing for revenue from imports within

the purview of 28 U.S.C. 1581(i) (1) and (4). Consequently while the doctrine of expressio unius est exclusio alterius would plainly exclude cartmen's license proceedings from 28 U.S.C. 1581(g), that doctrine does not preclude this court's jurisdiction to review the revocation of such licenses pursuant to the residual grant of jurisdiction in section 1581(i).

For the foregoing reasons, defendants' cross-motion to dismiss for lack of subject matter jurisdiction is denied.

PRELIMINARY INJUNCTION

We turn to the issue of whether plaintiffs have made the requisite showing for the issuance of a preliminary injunction.

The factual background pertinent to plaintiffs' application for a preliminary injunction set forth below is disclosed by the verified complaint and affidavits submitted by plaintiffs, which for present purposes we will accept in their most favorable light.

Di Jub is a New Jersey corporation that for the past 6 years has been engaged in the operation of a trucking concern at Weehawken, N.J., its principal place of business. The corporation was issued a customhouse cartman's license (No. 168) by the Newark Area Director of Customs on December 19, 1975 that authorizes Di Jub to receive and transport bonded merchandise. In connection with the operation of its trucking business, Di Jub engages some 40 owner-truckers.

Dianne Pellecchia is president and majority stockholder (75 percent stock ownership) of Di Jub;

Susan Jubert (Dianne's daughter by a prior marriage) is Di Jub's vice president and secretary-treasurer and minority stockholder (25 percent stock ownership);

Ralph Pellecchia (Dianne's husband) served, until July 2, 1979, as Di Jub's vice president and chief operating officer.

In an affidavit executed by Ralph Pellecchia on November 5, 1975, respecting an application of Di Jub to the U.S. Customs Service for a cartman's license, Mr. Pellecchia swore that: "The financial funds for the creation of Di Jub were derived exclusively from the resources of myself and my wife Dianne Jubert". However, in Dianne Pellecchia's affidavit executed on November 10, 1980, in support of the application for a temporary restraining order and order to show cause, she averred: "the financial resources to start the plaintiff corporation came from my personal funds that predated my marriage to Ralph Pellecchia" (par. 7). Clearly, these two critical sworn statements are contradictory.

On July 2, 1979, Mr. Pellecchia was sentenced to prison for a

term of 2½ years and fined $10,000 upon a judgment of conviction entered in the U.S. District Court, District of New Jersey, on three counts of aiding and abetting the filing of fraudulent corporate income tax returns for the fiscal years 1975, 1976, and 1977. Pellecchia's conviction was based upon a plea of guilty before the district court on April 26, 1979. Mr. Pellecchia resigned as an officer of Di Jub shortly prior to his conviction and sentencing.

Thereafter, on November 1, 1979, Di Jub received a notice of a proposal to revoke its cartman's license by the Area Director of Customs at Newark for violation of certain Customs regulations. The notice informed Di Jub that the proposed revocation was the result of the guilty plea and conviction of its vice president and chief operating officer, Ralph Pellecchia, of filing false corporate income tax returns on behalf of Di Jub (26 U.S.C. 7206).

On November 8, 1979, Di Jub filed a notice of appeal from the proposed revocation, and an administrative hearing was held on April 29, 1980, before Charles B. Lewis, Jr., Regional Counsel, Bureau of Alcohol, Tobacco and Firearms. Mr. Lewis found that Di Jub had violated 19 CFR 112.30(a)(9); and as grounds for revocation, the hearing officer concluded that the filing of false corporate income tax returns (form 1120S) for fiscal years 1975, 1976, and 1977 constituted negligence, dishonest or deceptive practices, or carelessness in the conduct of Di Jub's business. Accordingly, on July 11, 1980, Lewis recommended in his decision that the customhouse cartman's license of Di Jub be revoked.

By letter dated October 7, 1980, the Commissioner of Customs notified Di Jub that its license was revoked (effective Oct. 28, 1980) and made the following findings:

> 1. That the conduct of the hearing and procedural steps preliminary and subsequent thereto, complied with the pertinent statutes and regulations.
>
> 2. That Ralph Pellecchia served as vice president and chief operating officer of Di Jub Leasing Corp., in late 1975 and throughout 1976, 1977, and 1978.
>
> 3. That Ralph Pellecchia had resigned as an officer of Di Jub Leasing Corp., prior to his conviction of income tax fraud involving the corporation.
>
> 4. That Di Jub Leasing Corp., filed false income tax returns for 1975, 1976, and 1977 and that such action constitutes a negligent, dishonest, or deceptive practice or carelessness in the conduct of its business.

Subsequently, the effective date of the revocation was extended until November 12, 1980. (In fairness to the stockholders of Di Jub, I desire to stress that nowhere in the papers before the court is there any

indication of any misguided conduct or impropriety on their part as affecting Di Jub's operation of its business.)

On November 10, 1980, pursuant to plaintiffs' application for an order to show cause, and after hearing extensive oral argument by counsel for the respective parties, this court issued a temporary restraining order (TRO), staying the revocation of Di Jub's license until November 20, 1980. Thereafter, on November 20, 1980 and again on November 30, 1980, the TRO was extended by order of this court in accordance with plaintiffs' applications.[4]

As provided by 28 U.S.C. 1585, "The Court of International Trade shall possess all the powers in law or equity of, or as conferred by statute upon, a district court of the United States". And it should be stressed that under 28 U.S.C. 2643 this court, with certain limitations, is expressly empowered to grant injunctive relief.

The courts have long recognized that, fundamentally, preliminary injunctive relief is an "extraordinary remedy", *Asher* v. *Laird*, 475 F. 2d 360, 362 (D.C. Cir. 1973) and should be granted only upon a clear showing that the moving party is entitled to the relief requested. *Flintkote Co.* v. *Blumenthal*, 469 F. Supp. 115, 125–26 (N.D.N.Y. 1979), *aff'd* 596 F. 2d 51 (2d Cir. 1979).

In the oft-cited *Asher* case, the court of appeals succinctly observed (475 F. 2d at 362):

> The granting of such extraordinary relief [a preliminary injunction] is a matter of the trial court's discretion as guided by a standard consisting of the following familiar factors: (*1*) Has the plaintiff made a strong showing that it is likely to prevail on the merits of the appeal?; (2) Has the plaintiff shown that without such relief it would be irreparably injured?; (3) Would the issuance of the injunction substantially harm other parties interested in the proceedings?; (4) Where lies the public interest? * * *

Cf. Washington Metropolitan Area Transit Commission v. *Holiday Tours Inc., et al.*, 559 F. 2d 841 (D.C. Cir. 1977); See also Re, *Cases and Materials on Equity and Equitable Remedies* (1975), chapter XIX, Section 1.

After full consideration of the factor enumerated above in *Asher*, in conjunction with all the facts and circumstances adduced by plaintiffs, I conclude that plaintiff's application for the extraordinary relief sought should be denied.

Plaintiffs' memorandum of law submitted in support of their application for a preliminary injunction sets forth numerous claims on the merits. These claims include:

(1) The Customs Regulations under 19 CFR 112.30(a)(9) and

---

[4] These orders were issued on the condition that the plaintiff corporation shall not employ Ralph Pellecchia as an employee, agent, or officer, or appoint him as a director.

the statement of findings in the Commissioner of Customs' letter of revocation are constitutionally void for vagueness.

(2) The revocation of Di Jub's customhouse cartman's license without a specific finding as to the degree of culpability is arbitrary capricious and an abuse of discretion.

(3) The revocation of Di Jub's customhouse cartman's license is unlawful under the requirements of the Administrative Procedure Act as no legal finding was made and no grace period was granted as required by 5 U.S.C. 558.

(4) The conviction of Ralph Pellecchia under 26 U.S.C. 7206(2) for aiding and abetting the filing of false tax returns cannot be imputed to Di Jub Leasing Corp.

(5) Di Jub did not belong to Ralph Pellecchia and should not be penalized solely because of his guilty plea.

(6) There is no substantial evidence to support the decision of the Commissioner of Customs.

(7) The decisions of the Commissioner of Customs and the hearing officer involved an impermissible taint by combination of adjudicatory and investigatory functions.

(8) This revocation action amounts to a violation of the plea agreement with Ralph Pellecchia and is thus contrary to law.

(9) The applicable regulation, 19 CFR 112.30(a)(9), is properly addressed to the conduct of the business of the license holder.

(10) Di Jub's customhouse cartman's license is a property right of which it is being deprived without due process of law.

(11) Customs procedures in the revocation of Di Jub's customhouse cartman's license do not meet with the requirements of due process.

I have given careful consideration to plaintiffs' claims, and based upon the arguments and authorities submitted, I am unable to find that plaintiffs have made the requisite showing that they are likely to prevail on the merits.

Additionally, plaintiffs have failed to demonstrate that without a preliminary injunction they will be irreparably injured, for the following reasons: While there is no doubt that loss of a license to conduct a particular business can be shown to result in irreparable injury, here, plaintiffs have utterly failed to submit any evidence by affidavit, or otherwise, showing either the annual dollar amount of Di Jub's customs cartage business or even the percentage of the corporation's income from such business. The revocation of its cartman's license only precludes Di Jub from transporting merchandise under Customs jurisdiction, but the corporation can continue its non-Customs trucking business. It further appears that the 40 persons plaintiffs assert would be out of work as a result of the denial of a preliminary injunction are in the main owner-operators who are not plaintiffs' employees. These owner-operators can continue trucking merchandise elsewhere if Di Jub is unable to fill the gap left by the loss of its Customs cartage business. There has been no corroborating evidence whatsoever from

any of these owner-operators—and most certainly the court cannot speculate—that they will be out of work as asserted by plaintiffs' counsel.

Under all the facts and circumstances, I find that plaintiffs have failed to sustain their burden respecting the irreparable injury factor set forth in *Asher* v. *Laird, supra.*

For the reasons stated hereinabove, it is Ordered:

1. That defendants' cross-motion to dismiss for lack of subject matter jurisdiction is denied;
2. That plaintiffs' application for a preliminary injunction pendente lite is denied;
3. That defendant shall serve an answer to the complaint within 10 days after the service of this order.
4. That the temporary restraining order, as extended on November 30, 1980, is dissolved.

333-197 O - 81 - 4

Decisions of the United States Court of International Trade

Abstracts

Abstracted Protest Decision

DEPARTMENT OF THE TREASURY, *December 8, 1980.*

The following abstracts of decisions of the United States Court of International Trade at New York are published for the information and guidance of officers of the customs and others concerned. Although the decisions are not of sufficient general interest to print in full, the summary herein given will be of assistance to customs officials in easily locating cases and tracing important facts.

ROBERT E. CHASEN,
Commissioner of Customs.

DECISION NUMBER	JUDGE & DATE OF DECISION	PLAINTIFF	COURT NO.	BASIS OF VALUATION	HELD VALUE	BASIS	PORT OF ENTRY AND MERCHANDISE
R80/345	Newman, J. December 1, 1980	Rugby International Corp.	R65/20085, etc.	Export value	F.o.b. unit invoice prices plus 20% of difference between f.o.b. unit invoice prices and appraised values	Agreed statement of facts	Philadelphia Wool tube mats

DECISION NUMBER	JUDGE & DATE OF DECISION	PLAINTIFF	COURT NO.	BASIS OF VALUATION	HELD VALUE	BASIS	PORT OF ENTRY AND MERCHANDISE
R80/346	Newman, J. December 1, 1980	Trans-Ocean Import Co., Inc.	R63/11772, etc.	Export value	F.o.b. unit invoice prices plus 20% of difference between f.o.b. unit invoice prices and appraised values	Agreed statement of facts	Philadelphia Wool tube rugs, tube mats, etc.
R80/347	Newman, J. December 1, 1980	Trans-Ocean Import Co., Inc.	R63/11774, etc.	Export value	F.o.b. unit invoice prices plus 20% of difference between f.o.b. unit invoice prices and appraised values	Agreed statement of facts	Philadelphia Wool tube rugs, tube mats, etc.
R80/348	Newman, J. December 1, 1980	Trans-Ocean Import Co., Inc.	R65/12697, etc.	Export value	F.o.b. unit invoice prices plus 20% of difference between f.o.b. unit invoice prices and appraised values	Agreed statement of facts	Portland, Oreg. Tube mats, tube rugs, etc.
R80/349	Newman, J. December 1, 1980	Wilmington Shipp Co	R61/15147, etc.	Export value	F.o.b. unit invoice prices plus 20% of difference between f.o.b. unit invoice prices and appraised values	Agreed statement of facts	Wilmington, N.C. Wool tube mats, hand hooked rugs
R80/350	Newman, J. December 2, 1980	Rugby International Corp.	R65/15229, etc.	Export value	F.o.b. unit invoice prices plus 20% of difference between f.o.b. unit invoice prices and appraised values	Agreed statement of facts	Seattle Wool tube mats

R80/351	Newman, J. December 2, 1980	Rugby International Corp.	R65/21554, etc.	Export value	F.o.b. unit invoice prices plus 20% of difference between f.o.b. unit invoice prices and appraised values	Agreed statement of facts	Boston Tube mats
R80/352	Newman, J. December 2, 1980	Trans-Ocean Import Co.	R61/4838, etc.	Export value	F.o.b. unit invoice prices plus 20% of difference between f.o.b. unit invoice prices and appraised values	Agreed statement of facts	Houston Wool tube mats, tube rugs
R80/353	Newman, J. December 2, 1980	Trans-Ocean Import Co.	R61/10235, etc.	Export value	F.o.b. unit invoice prices plus 20% of difference between f.o.b. unit invoice prices and appraised values	Agreed statement of facts	Boston Oval tube mats, hand hooked rugs, etc.
R80/354	Newman, J. December 2, 1980	Trans-Ocean Import Co., Inc.	R60/17784, etc.	Export value	F.o.b. unit invoice prices plus 20% of difference between f.o.b. unit invoice prices and appraised values	Agreed statement of facts	Philadelphia Tube mats, hooked rugs, etc.
R 80/355	Newman, J. December 2, 1980	Trans-Ocean Import Co., Inc.	R61/6978, etc.	Export value	F.o.b. unit invoice prices plus 20% of difference between f.o.b. unit invoice prices and appraised values	Agreed statement of facts	Los Angeles Wool tube mats
R80/356	Newman, J. December 2, 1980	Trans-Ocean Import Co., Inc.	R62/1013, etc.	Export value	F.o.b. unit invoice prices plus 20% of difference between f.o.b. unit invoice prices and appraised values	Agreed statement of facts	New Orleans Tube mats

DECISION NUMBER	JUDGE & DATE OF DECISION	PLAINTIFF	COURT NO.	BASIS OF VALUATION	HELD VALUE	BASIS	PORT OF ENTRY AND MERCHANDISE
R80/357	Newman, J. December 2, 1980	Trans-Ocean Import Co., Inc.	R62/4973	Export value	F.o.b. unit invoice prices plus 20% of difference between f.o.b. unit invoice prices and appraised values	Agreed statement of facts	San Francisco Oval tube mats
R80/358	Newman, J. December 3, 1980	Bunge Corp.	R59/14754, etc.	Export value	F.o.b. unit invoice prices plus 20% of difference between f.o.b. unit invoice prices and appraised values	Agreed statement of facts	New Orleans Wool hooked rugs
R80/359	Newman, J. December 3, 1980	M. G. Maher & Co. Inc.	R65/22374	Export value	F.o.b. unit invoice prices plus 20% of difference between f.o.b. unit invoice prices and appraised values	Agreed statement of facts	New Orleans Rayon tube mats
R80/360	Newman, J. December 3, 1980	Mersco Textile Co., Inc.	R58/13651, etc.	Export value	F.o.b. unit invoice prices plus 20% of difference between f.o.b. unit invoice prices and appraised values	Agreed statement of facts	New York Wool hooked rugs, wool tube mats, etc.
R80/361	Newman, J. December 3, 1980	Nichimen Co., Inc.	R62/6391, etc.	Export value	F.o.b. unit invoice prices plus 20% of difference between f.o.b. unit invoice prices and appraised values	Agreed statement of facts	Los Angeles Sewing machine heads

R80/362	Newman, J. December 3, 1980	Nichimen Co., Inc.	R63/1326, etc.	Export value	F.o.b. unit invoice prices plus 20% of difference between f.o.b. unit invoice prices and appraised values	Agreed statement of facts	Los Angeles Sewing machine heads
R80,363	Newman, J. December 3, 1980	Nichimen Co., Inc.	R64 19484, etc.	Export value	F.o.b. unit invoice prices plus 20% of difference between f.o.b. unit invoice prices and appraised values	Agreed statement of facts	Los Angeles Sewing machine heads
R80 364	Newman, J. December 3, 1980	Providence Import Co., Inc.	246417-A, etc.	Export value	F.o.b. unit invoice prices plus 20% of difference between f.o.b. unit invoice prices and appraised values	Agreed statement of facts	New York Cotton hooked rugs etc.
R80/365	Newman, J. December 3, 1980	Providence Import Co., Inc.	R58/27825, etc.	Export value	F.o.b. unit invoice prices plus 20% of difference between f.o.b. unit invoice prices and appraised values	Agreed statement of facts	New York Wool hooked rugs, wool tube mats, etc
R80/366	Newman, J. December 3, 1980	Providence Import Co., Inc.	R59/11852, etc.	Export value	F.o.b. unit invoice prices plus 20% of difference between f.o.b. unit invoice prices and appraised values	Agreed statement of facts	New York Cotton hooked rugs, wool tube mats, etc.
R80/367	Newman, J. December 3, 1980	Providence Import Co., Inc.	R60/6382, etc.	Export value	F.o.b. unit invoice prices plus 20% of difference between f.o.b. unit invoice prices and appraised values	Agreed statement of facts	New York Wool tube mats, cotton hooked rugs, etc.

DECISION NUMBER	JUDGE & DATE OF DECISION	PLAINTIFF	COURT NO.	BASIS OF VALUATION	HELD VALUE	BASIS	PORT OF ENTRY AND MERCHANDISE
R80/368	Newman, J. December 3, 1980	Providence Import Co., Inc., et al.	255503-A, etc.	Export value	F.o.b. unit invoice prices plus 20% of difference between f.o.b. unit invoice prices and appraised values	Agreed statement of facts	New York Wool hooked rugs, wool tube mats, etc.
R80/369	Newman, J. December 3, 1980	Rugby International Corp.	R65/14806, etc.	Export value	F.o.b. unit invoice prices plus 20% of difference between f.o.b. unit invoice prices and appraised values	Agreed statement of facts	New York Wool tube mats, vinyl tubular rugs
R80/370	Newman, J. December 3, 1980	Rugby International Corp.	R66/25779, etc.	Export value	F.o.b. unit invoice prices plus 20% of difference between f.o.b. unit invoice prices and appraised values	Agreed statement of facts	New Orleans Wool tube mats
R80/371	Newman, J. December 3, 1980	Rugby International Corp.	R68/18587, etc.	Export value	F.o.b. unit invoice prices plus 20% of difference between f.o.b. unit invoice prices and appraised values	Agreed statement of facts	Charleston Wool tube mats
R80/372	Newman, J. December 3, 1980	Rugby Rug Mills Inc.	R58/7755, etc.	Export value	F.o.b. unit invoice prices plus 20% of difference between f.o.b. unit invoice prices and appraised values	Agreed statement of facts	New York Cotton hooked rugs, etc.

R80/373	Newman, J. December 3, 1980	Rugby Rug Mills Inc.	R58/27683, etc.	Export value	F.o.b. unit invoice prices plus 20% of difference between f.o.b. unit invoice prices and appraised values	Agreed statement o facts	Seattle Cotton hooked rug:
R80/374	Newman, J. December 3, 1980	Rugby Rug Mills Inc.	R59/15078, etc.	Export value	F.o.b. unit invoice prices plus 20% of difference between f.o.b. unit invoice prices and appraised values	Agreed statement of facts	Baltimore Wool blend hand hooked rugs, wool tube mats, etc.
R80/375	Newman, J. December 3, 1980	Trans-Ocean Import Co., Inc.	246031-A, etc.	Export value	F.o.b. unit invoice prices plus 20% of difference between f.o.b. unit invoice prices and appraised values	Agreed statement of facts	New York Wool hooked rugs, tube mats
R80/376	Newman, J. December 3, 1980	Trans-Ocean Import Co., Inc.	286015-A, etc.	Export value	F.o.b. unit invoice prices plus 20% of difference between f.o.b. unit invoice prices and appraised values	Agreed statement of facts	Norfolk Cotton hooked rugs
R80/377	Newman, J. December 3, 1980	Trans Ocean Import Co., Inc.	286102-A, etc.	Export value	F.o.b. unit invoice prices plus 20% of difference between f.o.b. unit invoice prices and appraised values	Agreed statement of facts	New York Wool hooked rugs, tube mats, etc.

DECISION NUMBER	JUDGE & DATE OF DECISION	PLAINTIFF	COURT NO.	BASIS OF VALUATION	HELD VALUE	BASIS	PORT OF ENTRY AND MERCHANDISE
R80/378	Newman, J. December 3, 1980	Trans Ocean Import Co., Inc.	286569-A	Export value	F.o.b. unit invoice prices plus 20% of difference between f.o.b. unit invoice prices and appraised values	Agreed statement of facts	New York Wool blend hooked rugs
R80/379	Newman, J. December 3, 1980	Trans Ocean Import Co., Inc.	R58/22392, etc.	Export value	F.o.b. unit invoice prices plus 20% of difference between f.o.b. unit invoice prices and appraised values	Agreed statement of facts	Philadelphia Wool hooked rugs, wool tube mats, etc.
R80 380	Newman, J. December 3, 1980	Trans-Ocean Import Co., Inc.	R60/5508, etc.	Export value	F.o.b. unit invoice prices plus 20% of difference between f.o.b. unit invoice prices and appraised values	Agreed statement of facts	San Francisco Cotton hooked rugs, cotton tube mats, etc.
R80/381	Newman, J. December 3, 1980	Trans Ocean Import Co., Inc.	R60/6915, etc.	Export value	F.o.b. unit invoice prices plus 20% of difference between f.o.b. unit invoice prices and appraised values	Agreed statement of facts	Philadelphia Wool hooked rugs, tube mats, etc.

Judgment of the United States Court of International Trade in Appealed Case

DECEMBER 3, 1980

APPEAL 80–20.—Armstrong Bros. Tool Co. et al. *v.* United States (Daido Corporation, Steelcraft Tools Division, Party-in-Interest).—AMERICAN MANUFACTURERS' ACTION—HAND TOOLS FROM JAPAN—NEGATIVE INJURY DETERMINATION—LTFV—ANTIDUMPING ACT—SUMMARY JUDGMENT—C.D. 4838 affirmed August 7, 1980 (C.A.D. 1252).

International Trade Commission Notices

Investigations by the U.S. International Trade Commission

DEPARTMENT OF THE TREASURY,
December 18, 1980.

The appended notices relating to investigations by the U.S. International Trade Commission are published for the information of Customs officers and others concerned.

R. E. CHASEN,
Commissioner of Customs.

In the Matter of CERTAIN HEADBOXES AND PAPERMAKING MACHINE FORMING SECTIONS FOR THE CONTINUOUS PRODUCTION OF PAPER, AND COMPONENTS THEREOF	Investigation No. 337-TA-82

Notice of Termination

AGENCY: U.S. International Trade Commission.

ACTION: Termination of investigation with respect to one respondent.

SUMMARY: In the absence of infringement perpetrated by respondent Crown Zellerbach Corp., the Commission granted the motion to terminate the investigation as to that respondent.

SUPPLEMENTARY INFORMATION: This investigation was instituted on April 8, 1980 (45 F.R. 23832), on the basis of a complaint filed on behalf of Beloit Corp., a manufacturer, developer, and distributor of machinery for the manufacture of paper. The complaint alleged the violation of section 337(a) of the Tariff Act of 1930 (19 U.S.C. 1337(a)) with respect to the importation into and sale in the United States of certain headboxes and papermaking machine forming sections for the continuous production of paper, which are alleged to infringe claims 1, 12, 14–16, and 22 of U.S. Letters Patent RE 28,-269, claims 1, 2, and 4–6 of U.S. Letters Patent 3,923,593, and claims 1–5 and 7–14 of U.S. Letters Patent 3,876,498.[1] The complainant owns the aforesaid patents by assignment and seeks an order excluding the allegedly infringing imports from entry into the United States.

[1] On Oct. 8, 1980, the Commission voted to terminate the investigation as to this patent on the basis of a motion filed by the complainant.

On September 14, 1980, respondent Crown Zellerbach Corp. filed a motion to terminate the investigation as to itself. This motion was based on the elimination of any question of infringement perpetrated by Crown Zellerbach as the result of the complainant's motion termination the investigation as to the '498 patent, which Crown Zellerbach had been specifically accused of infringing, and on the complainant's stipulation that the imported headboxes purchased by Crown Zellerbach do not infringe the claims of the patents remaining in the investigation. The motion was unopposed by the other respondents and was supported by the Commission investigative attorney.

On October 1, 1980, the presiding officer issued a recommended determination that the motion be granted.

Upon consideration of the recommendation of the presiding officer and the record developed in this investigation, on November 26, 1980, the Commission granted Motion Docket No. 82-20 and ordered that investigation No. 337-TA-82 be terminated with respect to respondent Crown Zellerbach Corp. effective as of December 3, 1980, the date of issuance.

ADDITIONAL INFORMATION: Copies of the Commission's Action and Order and all other public documents on the record of this investigation are available for public inspection and may be obtained during official working hours (8:45 a.m. to 5:15 p.m.) from the Office of the Secretary, U.S. International Trade Commission, 701 E Street NW., Room 156, Washington, D.C. 20436; telephone 202-523-0161.

FOR FURTHER INFORMATION CONTACT: Phyllis N. Smithey, Esq., Office of the General Counsel, U.S. International Trade Commission, 701 E Street NW., Room 224, Washington, D.C. 20436; telephone 202-523-0321.

By order of the Commission.

Issued: December 3, 1980.

KENNETH R. MASON,
Secretary.

In the Matter of CERTAIN MASS FLOW DEVICES AND COMPONENTS THERFOF	Investigation No. 337-TA-91

Designation of Commission Investigative Attorney

Mr. David J. Dir is hereby designated as Commission investigative attorney in the above captioned investigation, effective this date. The Secretary is requested to publish this notice in the Federal Register.

Dated: December 3, 1980.

TALBOT S. LINDSTROM,
Chief, Unfair Import Investigations Division,
U.S. International Trade Commission.

(TA-203-7)

Nonrubber Footwear

Notice of Investigation and Hearing

AGENCY: U.S. International Trade Commission.

ACTION: Upon its own motion and on the basis of a petition filed on October 23, 1980, on behalf of the American Footwear Industries Association, Amalgamated Clothing and Textile Workers Union, AFL-CIO, and United Food and Commercial Workers International Union, AFL-CIO, the Commission on December 4, 1980, instituted Investigation No. TA-203-7 under sections 203(i)(2) and 203(i)(3) of the Trade Act of 1974 (19 U.S.C. 2253 (i)(2) and (i)(3)) for the purpose of gathering information in order that it might advise the President of its judgment as to the probable economic effect on the industry concerned of the extension, reduction, or termination of import relief presently in effect with respect to footwear, provided for in items 700.05 through 700 95, inclusive (except items 700.51, 700.52, 700.53, 700.54, 700.60, 700.75, and 700.90), of the Tariff Schedules of the United States (TSUS). The relief in the form of quantitative limitations described in TSUS items 923.90 through 923.94 is provided against imports from Taiwan and Korea in Proclamation 4510 (issued June 24, 1977, 42 F.R. 3240). Import relief presently in effect with respect to such articles is scheduled to terminate at the close of June 30, 1981, unless extended by the President.

EFFECTIVE DATE: October 23, 1980.

FOR FURTHER INFORMATION CONTACT: Vera Libeau, Senior Investigator; 202-523-0358.

SUPPLEMENTARY INFORMATION:

PUBLIC HEARING ORDERED

A public hearing in connection with this investigation will be held in Washington, D.C., at 10 a.m., e.s.t., on Monday, March 9, 1981, in the Hearing Room, U.S. International Trade Commission Building, 701 E Street NW. Requests for appearances at the hearing should be received in writing by the Secretary to the Commission at his office in Washington no later than the close of business Thursday, February 19, 1981.

PREHEARING PROCEDURES

To facilitate the hearing process, it is requested that persons wishing to appear at the hearing submit prehearing briefs enumerating and discussing the issues which they wish to raise at the hearing.

Nineteen copies of such prehearing briefs should be submitted to the Secretary of the Commission no later than the close of business Friday, February 27, 1981. Copies of any prehearing briefs submitted will be made available for public inspection in the Office of the Secretary. While submission of prehearing briefs does not prohibit submission of prepared statements in accordance with section 201.12(d) of the Commission's Rules of Practice and Procedure (19 CFR 201.12(d)), it would be unnecessary to submit such a statement if a prehearing brief is submitted instead. Any prepared statements submitted will be made a part of the transcript. Oral presentations should, to the extent possible, be limited to issues raised in the prehearing briefs.

A prehearing conference will be held on Friday, February 20, 1981, at 10 a.m., e.s.t., in room 117 of the U.S. International Trade Commission Building.

Persons not represented by counsel or public officials who have relevant matters to present may give testimony without regard to the suggested prehearing procedures outlined above.

INSPECTION OF PETITION

The petition filed in this case is available for public inspection at the Office of the Secretary, U.S. International Trade Commission.

By order of the Commission.

Issued: December 5, 1980.

KENNETH R. MASON,
Secretary.

In the Matter of	
CERTAIN STEEL JACKS FROM CANADA	Investigation No. 603-TA-6

Notice of Termination

AGENCY: U.S. International Trade Commission.

ACTION: Termination of investigation and issuance of consent order.

SUMMARY: Notice is hereby given that the U.S. International Trade Commission has approved and issued a consent order in the above-entitled investigation, thereby terminating the investigation.

AUTHORITY: The authority for Commission disposition of this investigation is contained in section 603 of the Trade Act of 1974 (19 U.S.C. 2482).

SUPPLEMENTARY INFORMATION: In connection with a complaint filed under section 337 of the Tariff Act of 1930 (19 U.S.C. 1337) and a preliminary investigation by the Commission under section 603

of the Trade Act of 1974 (19 U.S.C. 2482) of alleged unfair acts and methods of competition in the importation into and sale in the United States of certain steel jacks, the complainant, Bloomfield Manufacturing Co., the Commission investigative attorney, and three companies named in the complaint as respondents, J. C. Hallman Manufacturing Co., American Gage and Manufacturing Co., and A. H. Bottorff Co., entered into a consent order agreement. Notice of the proposed consent order and a request for public comment thereon were published on October 8, 1980 (45 F.R. 66926). By the terms of the notice, all comments were to be received by the Secretary to the Commission no later than November 7, 1980. The 30-day period has expired, and the Commission has received no comments opposed to issuance of the proposed consent order.

Copies of the Commission's Action and Order and all other nonconfidential documents filed in connection with this investigation are available for inspection during official business hours (8:45 a.m. to 5:15 p.m.) in the Office of the Secretary, U.S. International Trade Commission, 701 E Street NW., Washington, D.C. 20436; telephone 202-523-0161.

FOR FURTHER INFORMATION CONTACT: Michael P. Mabile, Esq., Office of the General Counsel, U.S. International Trade Commission; telephone 202-523-0155.

By order of the Commission.

Issued: December 5, 1980.

KENNETH R. MASON,
Secretary.

Inv. No. 731-TA-4 (Final)

COUNTERTOP MICROWAVE OVENS FROM JAPAN

Notice of Termination of Antidumping Duty Investigation

AGENCY: U.S. International Trade Commission.

ACTION: Termination of antidumping duty investigation No. 731-TA-4 (Final).

EFFECTIVE DATE: December 4, 1980.

FOR FURTHER INFORMATION CONTACT: Robert Eninger, Office of Investigations; 202-523-0312.

SUPPLEMENTARY INFORMATION: On July 10, 1980, the Commission received notice from the U.S. Department of Commerce (the administering authority) that there is a reasonable basis to believe or suspect that countertop microwave ovens from Japan are being sold, or are likely to be sold, at less than fair value within the

meaning of section 733 of the Tariff Act of 1930. Accordingly, the Commission instituted, effective July 10, 1980, an investigation under section 735(b) of the Tariff Act of 1930 to determine whether an industry in the United States is materially injured, or is threatened with material injury, or the establishment of an industry in the United States is materially retarded, by reason of imports of the merchandise with respect to which the administering authority has made an affirmative determination.

Section 734(a) of the Tariff Act of 1930 permits the Commission to terminate antidumping duty investigations upon withdrawal of the petition by the petitioner. On December 1, 1980, the Commission received a letter from counsel on behalf of the Association of Home Appliance Manufacturers, the original petitioner for an antidumping duty investigation, withdrawing its petition in the matter of countertop microwave ovens from Japan and requesting that the Commission terminate its investigation. By this notice the Commission gives notice that it is granting the request of the petitioner by terminating the investigation of countertop microwave ovens from Japan.

In addition to publishing this notice in the Federal Register, the Commission is notifying the Department of Commerce of its action, in this case.

By order of the Commission.

Issued; December 5, 1980.

KENNETH R. MASON,
Secretary.

In the Matter of CERTAIN TURNING MACHINES AND COMPONENTS THEREOF	Investigation No. 337-TA-72

Notice of Termination

AGENCY: U.S. International Trade Commission.

ACTION: Termination of investigation No. 337-TA-72, Certain turning machines and components thereof.

SUMMARY: The parties to this investigation have filed a joint motion to terminate based upon a settlement agreement. After reviewing the record, including comments from interested Government agencies and private parties, the Commission has voted to terminate the investigation.

SUPPLEMENTARY INFORMATION: In connection with the Commission's investigation under section 337 of the Tariff Act of 1930, as amended (19 U.S.C. 1337) of alleged unfair methods of com-

petition and unfair acts in the importation or sale of certain turning machines and components thereof in the United States, the complainant and the respondents filed a motion on October 23, 1980 (Motion No. 72-56) to terminate this investigation on the basis of a settlement agreement.

Notice of the pendency of the motion to terminate and the general nature of the settlement agreement was published in the Federal Register on November 5, 1980 (45 F.R. 73563).

RECONSIDERATION: Any party wishing to petition for reconsideration of the Commission's action must do so within 14 days of service of the Commission Action and Order. Such petitions must be in accord with Commission Rule 210.56 (19 CFR 210.56).

PUBLIC ACCESS TO RECORD: Copies of the Commission's Action and Order, and any other public document in this investigation, are available to the public during official working hours (8:45 a.m. to 5:15 p.m.) in the Office of the Secretary, U.S. International Trade Commission, 701 E Street NW., Washington, D.C. 20436; telephone 202-523-0161.

FOR FURTHER INFORMATION CONTACT: Scott Daniels, Esq., Office of the General Counsel, U.S. International Trade Commission, 701 E Street NW., Washington, D.C. 20436; telephone 202-523-0480.

By order of the Commission.

Issued: December 8, 1980.

KENNETH R. MASON,
Secretary.

In the Matter of CERTAIN PLASTIC BOUQUET HOLDERS	Investigation No. 337-TA-80

Notice of Termination

AGENCY: U.S. International Trade Commission.

ACTION: Termination of investigation based on the issuance of a consent order.

SUMMARY: Notice is hereby given that the U.S. International Trade Commission has approved and issued a consent order (published in the Federal Register of Oct. 8, 1980, 45 F.R. 66927) in the above-entitled investigation, thereby terminating the investigation as to all respondents.

AUTHORITY: The authority for Commission disposition of this matter is contained in section 337 of the Tariff Act of 1930 (19 U.S.C.

1337) and in section 210.55 of the Commission's Rules of Practice and Procedure (19 CFR 210.55).

SUPPLEMENTARY INFORMATION: On February 19, 1980, the U.S. International Trade Commission instituted an investigation to determine whether there is a violation of section 337(a) of the Tariff Act of 1930, as amended (19 U.S.C. 1337(a)), in the importation into the United States of certain plastic bouquet holders, or in their sale, by reason of the alleged infringement of claims 1 through 4 of U.S. Letters Patent 3,576,699, the effect or tendency of which is to destroy or substantially injure an industry, efficiently and economically operated, in the United States. Notice thereof was published in the Federal Register of March 5, 1980 (45 F.R. 14347).

On April 30, 1980, all parties to the investigation filed a joint motion (motion 80–1) to terminate the investigation on the basis of a consent order agreement, which was submitted with the motion, as provided in section 210.51(a) of the Commission's Rules of Practice and Procedure (19 CFR 210.51(a)).

On May 19, 1980, the presiding officer issued a recommended determination, pursuant to section 210.53(a) of the Commission's Rules of Practice and Procedure (19 CFR 210.53(a)), that the investigation be terminated, based on the consent order agreement.

On July 21, 1980, counsel for the complainant submitted a letter to the Commission in which the complainant acquiesced in the disposal by respondents of their remaining inventory. He further stated that the complainant had no objection to the inclusion of that letter as part of the proposed settlement agreement.

On September 9, 1980, all parties to the investigation submitted a "Joint Motion to Amend the Consent Order Agreement," which would have the effect of substituting new language for paragraph 5 of the proposed consent order.

The Commission amended paragraph 6 of the proposed consent order to conform to the proposed amended language of paragraph 5, and by adding a new paragraph (par. 9) to deal with inventories. The Commission then ordered publication of the amended consent order for public comment.

On October 8, 1980, notice of the proposed consent order and a request for public comment was published in the Federal Register (45 F.R. 66927). By the terms of the notice, all comments and requests for oral arguments or oral presentation were to be received by the Secretary no later than November 7, 1980. Copies of the Commission action and order, the notice, and the proposed amended consent order were served on each of the parties by certified mail. The Commission received no comment opposed to the proposed consent order.

Copies of the Commission's Action and Order and all other non-

333-197 O - 81 - 2

confidential documents filed in connection with this investigation are available for inspection during official business hours (8:45 a.m. to 5:15 p.m.) in the Office of the Secretary, U.S. International Trade Commission, 701 E Street NW., Washington, D.C. 20436; telephone 202-523-0161.

FOR FURTHER INFORMATION CONTACT: Jack Simmons, Esq., Office of the General Counsel, U.S. International Trade Commission; telephone 202-523-0493.

By order of the Commission.

Issued: December 9, 1980.

KENNETH R. MASON,
Secretary.

In the Matter of CERTAIN APPARATUS FOR THE CONTINOUS PRODUCTION OF COPPER ROD	Investigation No. 337-TA-52

ADVISORY OPINION PROCEEDING

Notice of Denial of Request to Reopen and Vacate Advisory Opinion

AGENCY: U.S. International Trade Commission.

ACTION: Denial of Southwire Co.'s request to reopen and vacate the Commission advisory opinion issued on July 14, 1980.

SUPPLEMENTARY INFORMATION: On October 9, 1980, Southwire Company, complainant in investigation No. 337-TA-52, certain apparatus for the continuous production of copper rod, filed a petition asking the Commission to reopen and vacate its advisory opinion regarding the cease and desist order issued on November 23, 1979, involving U.S. Letters Patent 3,317,994. The petition to reopen and vacate the advisory opinion was opposed by Krupp G.m.b.H. and Krupp International, Inc., respondents in the Commission investigation. On December 5, 1980, the Commission voted to deny Southwire's request.

FOR FURTHER INFORMATION CONTACT: Jeffrey Neeley, Esq., Office of the General Counsel, U.S. International Trade Commission, 701 E Street NW., Washington, D.C. 20436; telephone 202-523-0359.

By order of the Commission.

Issued: December 10, 1980.

KENNETH R. MASON,
Secretary.

In the Matter of CERTAIN AIRTIGHT WOOD STOVES	Investigation No. 337-TA-92

Notice of Investigation

AGENCY: U.S. International Trade Commission.

ACTION: Institution of investigation pursuant to 19 U.S.C. 1337.

SUMMARY: Notice is hereby given that a complaint was filed with the U.S. International Trade Commission on October 16, 1980, under section 337 of the Tariff Act of 1930 (19 U.S.C. 1337), on behalf of Energy Harvesters Corp., P.O. Box 19, Fitzwilliam, N.H. 03447. An amended complaint was filed on November 13, 1980. The amended complaint (hereinafter referred to as the complaint) alleges unfair methods of competition and unfair acts in the importation of certain airtight wood stoves into the United States, or in their sale, by reason of such stoves' infringing complainant's common law trademark rights, being passed off as complainant's product, being deceptively advertised and marketed, and infringing the single claim of U.S. Letters Patent Des. No. 253,189. The complaint further alleges that the effect or tendency of the unfair methods of competition and unfair acts is to destroy or substantially injure an industry, efficiently and economically operated, in the United States.

The complainant requests that, after a full investigation, a permanent exclusion of the imports in question be ordered.

AUTHORITY: The authority for institution of this investigation is contained in section 337 of the Tariff Act of 1930 (19 U.S.C. 1337) and in section 210.12 of the Commission's Rules of Practice and Procedure.

SCOPE OF THE INVESTIGATION: Having considered the complaint, the U.S. International Trade Commission, on December 5, 1980, ordered that—

(1) Pursuant to subsection(b) of section 337 of the Tariff Act of 1930 (19 U.S.C. 1337(b)), an investigation be instituted to determine whether there is a violation of subsection (a) of section 337 in the unlawful importation of certain airtight wood stoves into the United States, or in their sale, by reason of such stoves' infringing complainant's common law trademark rights, being passed off as complainant's product, being deceptively advertised and marketed, and infringing the single claim of U.S. Letters Patent Des. No. 253,189, the effect or tendency of which is to substantially injure an industry, efficiently and economically operated, in the United States;

(2) For the purpose of this investigation so instituted, the

following are hereby named as parties upon which this notice of investigation shall be served:

(a) The complainant is—

Energy Harvesters Corp.
P.O. Box 19
Fitzwilliam, N.H. 03447

(b) The respondents are the following companies allegedly engaged in the unlawful importation of such articles into the United States, or in their sale, and are parties upon which the complaint is to be served:

Oriental Kingsworld Industrial Co., Ltd.
P.O. Box 26–333
Taipei, Taiwan

Franklin Cast Products, Inc.
1800 Post Road, 17 Airport Plaza
Warwick, R.I. 02886

Unity Buying Service Co.
Hicksville, N.Y. 11802

(c) For the purpose of the investigation so instituted, John Milo Bryant, U.S. International Trade Commission, 701 E Street NW., Washington, D.C. 20436, is hereby named Commission investigative attorney, a party to this investigation; and

(3) For the investigation so instituted, Donald K. Duvall, Chief Administrative Law Judge, U.S. International Trade Commission, 701 E Street NW., Washington, D.C. 20436, shall designate the presiding officer.

Responses must be submitted by the named respondents in accordance with section 210.21 of the Commission's Rules of Practice and Procedure (19 CFR 210.21). Pursuant to sections 201.16(d) and 210.21(b) of the rules, such responses will be considered by the Commission if received not later than 20 days after the date of service of the complaint. Extensions of time for submitting a response will not be granted unless good and sufficient cause therefor is shown.

Failure of a respondent to file a timely response to each allegation in the complaint and in this notice may be deemed to constitute a waiver of the right to appear and contest the allegations of the complaint and this notice, and to authorize the presiding officer and the Commission, without further notice to the respondent, to find the facts to be as alleged in the complaint and this notice and to enter both a recommended determination and a final determination containing such findings.

The complaint, except for any confidential information contained therein, is available for inspection during official working hours (8:45 a.m. to 5:15 p.m.) in the Office of the Secretary, U.S. International Trade Commission, 701 E Street NW., Washington, D.C. 20436; telephone 202–523–0161.

FOR FURTHER INFORMATION CONTACT: John Milo Bryant, Commission Investigative Attorney, Unfair Import Investigations Division, U.S. International Trade Commission; telephone 202–523–0440.

By order of the Commission.

Issued: December 11, 1980.

KENNETH R. MASON,
Secretary.

---

19 CFR Part 200

Proposed Amendments to Agency Ethics Rules

AGENCY: U.S. International Trade Commission.

ACTION: Proposed rulemaking.

SUMMARY: Recent regulations proposed by the Office of Government Ethics (OGE) redefine the qualifications and duties of designated agency ethics officials and list the elements of agency ethics programs. The following proposed amendments to Commission ethics regulations, 19 CFR part 200, reflect the changes in OGE regulations. In addition, the Commission is abandoning its previous practice of requiring that its Ethics Counselor be a Commissioner. The Counselor must be a senior Commission employee with experience demonstrating the ability to coordinate and manage the program. This is in line with the practice of practically all other Government agencies. In addition, there are several technical and conforming changes reflecting the fact that Commission employees who file SF 278 public financial disclosure report need not file confidential financial disclosure reports under Executive Order No. 11222 and subpart C of part 200 of title 19, Code of Federal Regulations.

DATE: Comments must be received by January 15, 1980.

ADDRESS: Comments may be submitted to Honorable Bill Alberger, Chairman, U.S. International Trade Commission, 701 E Street NW., Washington, D.C. 20436.

FOR FURTHER INFORMATION CONTACT: Michael B. Jennison of the Office of General Counsel at 202–523–0189.

SUPPLEMENTARY INFORMATION: The U.S. International Trade Commission proposes to amend 19 CFR part 200 as follows:

1. In sections 200.735–101 and 200.735–102(a)(b), change U.S. Tariff Commission to read U.S. International Trade Commission.

2. 200.735–102(c) is changed to read:

(c) Employee means a Commissioner, employee, or special Government employee of the Commission.

3. Add 200.735–102(g):

(g) "Ethics Counselor" means designated agency ethics official as defined in subpart B of part 738, Code of Federal Regulations.

4. Delete present 200.735–103 and add:

200.735–103 Counseling service.

(a) The Chairman shall appoint an Ethics Counselor, who serves as the Commission's designated agency ethics official and liaison to the Office of Government Ethics and who is responsible for carrying out the Commission's ethics program. The program shall be designed to implement titles II, IV, and V of the Ethics in Government Act of 1978, Executive Order No. 11222, the regulations in this part, and other statutes and regulations applicable to agency ethics matters. The Ethics Counselor will be a senior Commission employee with experience demonstrating the ability to review financial disclosure reports and counsel employees with regard to resolving conflicts of interest, review the financial disclosures of Presidential nominees to the Commission prior to confirmation hearings, counsel employees with regard to ethics standards, assist supervisors in implementing the Commission's ethics program, and periodically evaluate the ethics program.

(b) The Ethics Counselor shall select a Deputy, who will serve as alternate agency ethics official and to whom any of the Counselor's statutory and regulatory duties may be delegated.

(c) The Counselor shall coordinate and manage the agency's ethics program. The Counselor's duties shall consist of—

(1) Liaison with the Office of Government Ethics;

(2) Review of financial disclosure reports, except that reports filed by Commissioners other than the Chairman shall be reviewed by the Chairman and the report filed by the Chairman shall be reviewed by the Vice Chairman;

(3) Initiation and maintenance of ethics education and training programs;

(4) Supervision and monitoring of administrative actions and sanctions; and

(5) Implementation of the specific program elements listed in Office of Government Ethics regulations (5 CFR 738.203(b)).

5. 200.735–114 is changed to read as follows:

200.735–114 Employees required to submit statements.

Except as provided in 200.735–114a, the following employees shall submit confidential statements of employment and financial interests:

(a)(1) Employees in grade GS–13 or above under section 5332 of title 5, United States Code, or in comparable or higher positions not subject to that section, other than those employees who are required to file public financial disclosure reports by title III of the Ethics in Government Act of 1978.

(2) The Director of Personnel shall list all such positions,

shall include the listing in the chapter of the Commission's Policy Manual pertaining to the filing of confidential statements of employment and financial interests, and shall furnish copies thereof to the Deputy Counselor and to affected employees.

(3) The Director of Personnel shall update the listing required by paragraph (a)(2) of this section and shall take all other steps required by paragraph (a)(2) as of January 1 and July 1 of each year.

(b)(1) Employees classified below GS–13 under section 5332 of title 5, United States Code, or at a comparable pay level under other authority, other than those employees who are required to file public financial disclosure reports by title III of the Ethics in Government Act of 1978, who are (i) responsible for making a decision or taking an action in regard to Commission contracting or procurement, (ii) responsible for conducting investigative and research activities where the decision to be made or action to be taken could have an economic impact on any non-Federal enterprise, or (iii) responsible for exercising the authority of any supervisory or investigative employee in the absence of such employee.

(2) The Director of Personnel, upon obtaining the advice of the General Counsel, shall be responsible for determining which positions below GS–13 meet the criteria of paragraph (b)(1) of this section. The Director of Personnel shall justify his or her determination in writing and shall submit it to the Office of Personnel Management for its approval. Upon obtaining the approval of the Office of Personnel Management, the Director of Personnel shall include the listing of these positions in the chapter of the Commission's Policy Manual pertaining to the filing of confidential statements of employment and financial interests and shall furnish copies thereof to the Deputy Counselor and to affected employees.

(3) The Director of Personnel shall evaluate the determination under paragraph (b)(2) of this section as of January 1 and July 1 of each year. When organizational changes or personnel actions indicate that positions should be either added to or taken from the list of positions which the Director of Personnel has determined meet the criteria of paragraph (b)(1) of this section, the Director of Personnel shall make a new determination under paragraph (b)(2) of this section and shall take all other steps required by paragraph (b)(2) immediately upon the implementation of said organizational changes or personnel actions.

By order of the Commission.

Issued: December 12, 1980.

KENNETH R. MASON,
Secretary.

19 CFR Part 207.8 (Investigation No. AA1921-66A subsequently renumbered as 751-TA-2)

TELEVISION RECEIVING SETS FROM JAPAN

Indefinite Postponement of Administrative Deadline

AGENCY: U.S. International Trade Commission.

ACTION: Waiver of time limit and indefinite postponement of administrative deadline in this investigation.

SUMMARY: This action indefinitely postpones the administrative deadline in this investigation under section 751(b) of the Tariff Act of 1930, 19 U.S.C. 1675(b), to determine whether changed circumstances exist which indicate that an industry in the United States would not be threatened with material injury if the antidumping finding concerning television receiving sets from Japan were revoked. The investigation was initiated on September 16, 1980. The notice, which set the deadline for the Commission's determination as January 13, 1981, was published in the Federal Register on September 25, 1980. (45 F.R. 6379) The Commission does not have sufficient information to make a decision on this matter. The Commission, therefore, has waived this time limit and indefinitely postpones the administrative deadline until a sufficient number of purchasers and importers respond to the Commission's questionnaires to provide the Commission with adequate information to enable it to make an informed determination.

EFFECTIVE DATE: December 11, 1980.

FOR FURTHER INFORMATION CONTACT: Daniel F. Leahy, U.S. International Trade Commission, 701 E Street NW., Washington D.C. 20436, 202-523-1369.

SUPPLEMENTARY INFORMATION: The Commission has found that information considered essential to the conduct of this investigation is being withheld. Questionnaire responses were due to be returned to the Commission by November 12, 1980. Because of the detailed nature of these questionnaires and the limited resources of many respondents as they enter their Christmas selling season, many time extensions were requested by respondents and granted by the staff. The latest extensions expired November 28, 1980. A number of importers and purchasers, however, have still not responded. The Commission believes it does not have adequate pricing data necessary to undertake a price comparison and to make an informed determination in this matter.

Section 751(b) of the Tariff Act of 1930, 19 U.S.C. 1675(b), does not provide for a statutory deadline. The Commission's rule and notice of investigation provide the only deadlines in this matter. All review investigations conducted under 19 CFR 207.45 shall be completed within 120 days as set forth in subpart C of the rules. 19 CFR 207.45(b). The Commission has the authority to waive its own rules when in its judgment there is good and sufficient reason, 19 CFR 201.4(b), and section 207.8 of the Commission's rules, 19 CFR 207.8, specifically provides that whenever a person refuses to produce information requested in a timely manner and in the form required, or otherwise significantly impedes an investigation, the Commission may waive any time limitations set forth in its rules in order to obtain needed information.

Thus the Commission hereby waives its 120-day-time limitation and postpones the investigation until it receives adequate information to make an informed determination. If the Commission does not receive the necessary information in the near future, it may at that time consider sending supplementary questionnaires to producers, importers, and purchasers every 90 days, seeking court enforcement of its subpenas, or drawing inferences adverse to recipients of questionnaires who do not respond.

By order of the Commission.
Issued: December 12, 1980

KENNETH R. MASON,
Secretary.

In the Matter of CERTAIN HOLLOW FIBER ARTIFICIAL KIDNEYS	Investigation No. 337–TA–81

Notice of Commission Request for Comments Concerning Settlement Agreement

AGENCY: U.S. International Trade Commission.

ACTION: Request for public comment on proposed settlement agreement.

SUMMARY: This settlement agreement would result in termination of this investigation. This notice requests public comment on the agreement within 30 days.

DATES: Comments will be considered if received within 30 days of this notice. Comments should conform with section 201.8 of the Commission's Rules of Practice and Procedure (19 CFR 201.8) and should be addressed to Kenneth R. Mason, Secretary, U.S. Inter-

national Trade Commission, 701 E Street NW., Washington, D.C. 20436.

SUPPLEMENTAL INFORMATION: In connection with the Commission's investigation, under section 337 of the Tariff Act of 1930 (19 U.S.C. 1337), of alleged unfair methods of competition and unfair acts in the importation or sale of certain hollow fiber artificial kidneys in the United States, respondents Terumo Kabushiki Kaisha, Terumo Corp., and Terumo American, Inc. (hereafter Terumo) and complainant Cordis Dow Corp., jointly requested the Commission on October 29, 1980, to terminate the investigation on the basis of a license agreement between Terumo and Cordis Dow. The Commission investigative attorney joined in the request to terminate. The license agreement between Terumo and Cordis Dow contains confidential business information which may not be publicly disclosed. However, the essence of the agreement, which is described in the motion to terminate, is that Terumo obtains a nonexclusive sublicense under U.S. Letters Patent 3,228,876, permitting it to import and sell devices in the United States, including hollow fiber artificial kidneys, used in the fields of hemodialysis and oxygenation, which are covered by any or all of the claims of the patent in controversy. Copies of the motion to terminate are available for inspection by interested persons in the Office of the Secretary to the Commission, 701 E Street NW., Washington, D.C. 20436; telephone 202-523-0161.

WRITTEN COMMENTS REQUESTED: In light of the Commission's duty to consider the public interest, the Commission requests written comments from interested persons and agencies concerning the effect of the termination of this investigation based on the license agreement upon (1) the public health and welfare, (2) competitive conditions in the U.S. economy, (3) the production of like or directly competitive articles in the United States, and (4) U.S. consumers. Notice of this investigation was published in the Federal Register of April 2, 1980 (44 F.R. 21752).

ADDITIONAL INFORMATION: The original and 19 true copies of all written submissions must be filed with the Secretary of the Commission. Any person desiring to submit a document (or a portion thereof) to the Commission in confidence must request in camera treatment. Such request should be directed to the Secretary and must include a full statement of the reasons why the Commission should grant such treatment. The Commission will either accept such submission in confidence or return it. All nonconfidential written submissions will be open to public inspection at the Office of the Secretary.

FOR FURTHER INFORMATION CONTACT: Scott Daniels, Esq., Office of the General Counsel, U.S. International Trade Com-

mission, 701 E Street NW., Washington, D.C. 20436; telephone 202-523-0480.

By order of the Commission.

Issued: December 12, 1980.

KENNETH R. MASON,
Secretary.

Index

U.S. Customs Service

Treasury Decisions:

	T.D. No.
Carriers' bonds	80-299
Foreign currencies:	
Daily certified rates; December 1-5, 1980	80-300
Rates which varied from quarterly rate; December 1-5, 1980	80-301
Facsimile signature (bonds)	80-302
Carriers' bonds	80-303
Customs approved public gauger	80-304
Customs approved public gauger	80-305
Customs approved public gauger	80-306

Court of Customs and Patent Appeals

	C.A.D. No.
Pasco Terminals, Inc. v. United States of America	1256